DocuSign Envelope ID: CFBE966A-192B-4378-9E32-B4C08CAC394B

BLAND CIRCLE SUBDIVISION

25 LOT SUBDIVISION
NW 1/4 NE 1/4 SECTION 35, T. 2S, R. 1E, W.M.
CITY OF WEST LINN, OREGON

APPROVED FOR CONSTRUCTION BY
CITY OF WEST LINN
This approval is only for general conformance with the design concept and general compliance with applicable codes and requirements and shall not be construed as relieving the Design Engineer of full responsibility for accuracy and completeness of the drawings. This plan review approval does not prevent the City from requiring further code corrections in the field.
DATE: 4/22/2020 BY:

23190 BLAND CIRCLE
SUBDIVISION
TAX MAP 2S1E 35AB
TAX LOT 9100
CITY OF WEST LINN, OREGON

COVER SHEET

GENERAL LEGEND

- LANDSCAPE HEDGE
- FLOW LINE
- FENCE
- EXISTING MAJOR CONTOUR LINE
- EXISTING MINOR CONTOUR LINE
- PROPOSED MAJOR CONTOUR LINE
- PROPOSED MINOR CONTOUR LINE
- SIGNIFICANT RESOURCE OVERLAY ZONE (SROZ)
- SANITARY SEWER LINE
- STORM DRAIN LINE
- GAS LINE
- WATER LINE
- OVERHEAD UTILITIES LINE
- UNDERGROUND UTILITIES LINE
- COMMUNICATIONS LINE
- ELECTRIC LINE
- FIRE HYDRANT
- AIR RELEASE
- WATER BLOWOFF
- WATER METER/SERVICE
- WATER VAULT
- IRRIGATION SPRINKLER HEAD
- CULVERT / OUTFALL
- STORM DRAIN MANHOLE
- CATCH BASIN / AREA DRAIN
- SANITARY SEWER MANHOLE
- UTILITY MANHOLE
- UTILITY CLEAN OUT
- UTILITY VALVE
- UTILITY POLE
- UTILITY GUY POLE
- UTILITY GUY WIRE
- UTILITY/LIGHT POLE
- LIGHT POLE
- LIGHT POLE WITH ARM
- LIGHT SIGNAL JUNCTION BOX
- JUNCTION BOX
- ELECTRIC METER/SERVICE
- ELECTRIC PEDESTAL
- ELECTRIC VAULT
- TELEPHONE MANHOLE
- COMMUNICATIONS PEDESTAL
- COMMUNICATIONS VAULT
- GAS METER/SERVICE
- GAS PEDESTAL
- DECIDOUS TREE
- EVERGREEN TREE
- SIGN POST
- MAILBOX
- SIDEWALK TO BE INSTALLED AT TIME OF STREET CONSTRUCTION

SITE MAP

VICINITY MAP

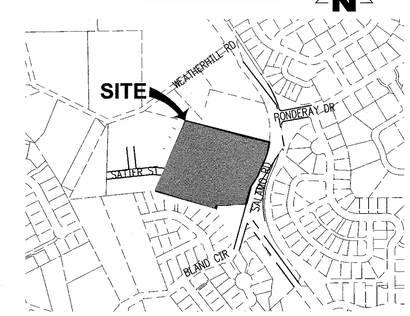

NOTICE TO EXCAVATORS:
ATTENTION: OREGON LAW REQUIRES YOU TO FOLLOW RULES ADOPTED BY THE OREGON UTILITY NOTIFICATION CENTER. THOSE RULES ARE SET FORTH IN OAR 952-001-0010 THROUGH OAR 952-001-0090. YOU MAY OBTAIN COPIES OF THE RULES BY CALLING THE CENTER.
(NOTE: THE TELEPHONE NUMBER FOR THE OREGON UTILITY NOTIFICATION CENTER IS (503)-232-1987).

POTENTIAL UNDERGROUND FACILITY OWNERS

Dig Safely.
Call the Oregon One-Call Center
DIAL 811 or 1-800-332-2344

EMERGENCY TELEPHONE NUMBERS

NW NATURAL GAS	
M-F 7am-6pm	1-800-882-3377
AFTER HOURS	503-226-4211
PGE	503-464-7777
CENTURY LINK	1-877-348-9005
COMCAST	1-855-884-3917
CITY OF WEST LINN ENGINEERING	503-722-5500
WEST LINN WATER DEPT. (EMERGENCY)	503-656-6081
AFTER HOURS (EMERGENCY)	503-635-0238
WEST LINN NON-EMERGENCY	503-742-8609

ENGINEER'S NOTE TO CONTRACTOR

THE EXISTENCE AND LOCATION OF ANY UNDERGROUND UTILITIES OR STRUCTURES SHOWN ON THESE PLANS ARE OBTAINED BY A SEARCH OF AVAILABLE RECORDS. TO THE BEST OF OUR KNOWLEDGE, THERE ARE NO EXISTING UTILITIES EXCEPT THOSE SHOWN ON THESE PLANS. THE CONTRACTOR IS REQUIRED TO TAKE DUE PRECAUTIONARY MEASURES TO PROTECT THE UTILITY LINES SHOWN ON THESE DRAWINGS. THE CONTRACTOR FURTHER ASSUMES ALL LIABILITY AND RESPONSIBILITY FOR THE UTILITY PIPES, CONDUITS OR STRUCTURES SHOWN OR NOT SHOWN ON THESE DRAWINGS.

THE CONTRACTOR AGREES THAT HE SHALL ASSUME SOLE AND COMPLETE RESPONSIBILITY FOR THE JOB SITE CONDITIONS DURING THE COURSE OF CONSTRUCTION OF THIS PROJECT, INCLUDING SAFETY OF ALL PERSONS AND PROPERTY; THAT THIS SHALL APPLY CONTINUOUSLY AND NOT BE LIMITED TO NORMAL WORKING HOURS; AND THAT THE CONTRACTOR SHALL DEFEND, INDEMNIFY AND HOLD THE OWNER AND THE ENGINEER HARMLESS FROM ANY AND ALL LIABILITY, REAL OR ALLEGED, IN CONNECTION WITH THE PERFORMANCE OF WORK ON THIS PROJECT, EXCEPT FOR LIABILITY ARISING FROM THE SOLE NEGLIGENCE OF THE OWNER OR THE ENGINEER.

CONTRACTOR SHALL VERIFY ALL CONDITIONS AND DIMENSIONS AND SHALL REPORT ANY DISCREPANCIES TO THE ENGINEER PRIOR TO THE COMMENCEMENT OF WORK.

BENCHMARK INFORMATION

THE DATUM FOR THIS SURVEY IS BASED UPON OREGON REAL-TIME GNSS NETWORK (ORGN).

DATUM = NGVD 29

SITE DATA

AREA:	6.52 Ac.
ZONING:	R-7
TAX MAP:	T2SR1E35AB
TAX LOT:	9100
NO. OF LOTS:	25

PROJECT CONTACTS

APPLICANT:
TOLL WEST COAST LLC.
4949 MEADOWS ROAD, SUITE 420
LAKE OSWEGO, OR 97035
(971) 339-5176
JPORTLOCK@TOLLBROTHERS.COM

OWNER:
DAVID & DRUCILLA SLOOP
23190 BLAND CIRCLE
WEST LINN, OR 97068

LAND USE, CIVIL ENGINEER AND SURVEYOR:
EMERIO DESIGN, LLC
6445 SW FALLBROOK PL, SUITE 100
BEAVERTON, OR 97008
LAND USE CONTACT: STEVE MILLER
ENGINEER CONTACT: ERIC EVANS
SURVEYOR CONTACT: KING PHELPS
(503) 746-8812 (P)
(503) 639-9592 (F)

DRAWING INDEX

Sheet Number	Sheet Title
1	COVER SHEET
2	CONSTRUCTION NOTES
3	TYPICAL STREET SECTIONS
4	EXISTING CONDITIONS & DEMO PLAN
5	TREE PRESERVATION PLAN
6	TREE PRESERVATION DETAILS
7	PRELIMINARY PLAT
8	COMPOSITE UTILITY PLAN
9	GRADING PLAN
10	STORM WATER FACILITY PLAN & PROFILE
11	STORM WATER FACILITY PLANTING PLAN
12	STORM LINE SD-01 PLAN & PROFILE
13	SATTER STREET & SD-03 PLAN & PROFILE
14	DAHLIA COURT & SD-04 PLAN & PROFILE
15	TRACT C PRIVATE DRIVE & SD-02 PLAN & PROFILE
16	LOTS 16 & 17 PRIVATE DRIVE PLAN & PROFILE
17	SATTER STREET BROW DETAILS
18	SATTER ST. & DAHLIA CT. CURB RETURNS
19	DAHLIA CT. & SALAMO RD. CURB RETURNS
20	SANITARY LINE SS-A PLAN & PROFILE
21	SAN. LINE SS-B & WATERLINE PLAN & PROFILE
22	SANITARY LINE SS-C & WATERLINE PLAN & PROFILE
23	SANITARY LINE SS-D PLAN & PROFILE
24	STREET LIGHTING
25	STREET TREE & SIGNAGE
26	WATER & STREET CONSTRUCTION DETAILS
27	STREET CONSTRUCTION DETAILS
28	STORM WATER & SANITARY SEWER CONSTRUCTION DETAILS
29	STORM WATER & SANITARY SEWER CONSTRUCTION DETAILS
30	CONDITIONS OF APPROVAL
31	PGE UTILITY PLAN
EC1	COVER SHEET
EC2	EXISTING CONDITIONS & DEMO PLAN
EC3	GRADING & EROSION CONTROL PLAN
EC4	EROSION AND SEDIMENT CONTROL DETAILS
EC5	EROSION AND SEDIMENT CONTROL DETAILS

REVISIONS

NO.	DATE	DESCRIPTION
0	02/19	PLANNING SUBMITTAL
1	08/19	PLANNING RESUBMITTAL
2	10/19	ENGINEERING 1ST SUBMITTAL
3	03/20	ENGINEERING 2ND SUBMITTAL

EMERIO Design
6445 SW FALLBROOK PLACE, SUITE 100
BEAVERTON, OREGON 97008
TEL: (503) 746-8812
FAX: (503) 639-9592
www.emeriodesign.com

REGISTERED PROFESSIONAL ENGINEER 54665 OREGON JULY 11, 1986 ERIC DANIEL EVANS
DocuSigned by: Eric D. Evans
EXPIRES: 12/31/2021

SHEET 1 OF 31

FILE:P:\0542-001 23190 S Bland Circle\dwg\civil\Engineering Set\0542-001_01cover, Layout: 1 COVER SHEET, Plot Date: 6/19/2020 9:18 AM, by: Josh Ayers

DocuSign Envelope ID: CFBE966A-192B-4378-9E32-B4C08CAC394B

GENERAL NOTES

1. ALL REFERENCES TO CITY OF WEST LINN DESIGN STANDARDS REFER TO THE CURRENT PUBLIC WORKS STANDARD CONSTRUCTION SPECIFICATIONS.

2. THE DESIGN ENGINEER WILL BE RESPONSIBLE FOR INSPECTION OF THE PROPOSED IMPROVEMENTS WITH OVERSIGHT FROM THE CITY'S PUBLIC WORKS AND ENGINEERING STAFF.

3. A WORK SCHEDULE WILL BE REQUIRED FROM THE CONTRACTOR SO THAT THE ENGINEER CAN HAVE AN INSPECTOR ONSITE AT THE APPROPRIATE TIMES. IF THE WORK SCHEDULE IS REVISED THE CONTRACTOR IS TO NOTIFY THE ENGINEER AT LEAST 24 HOURS NOTICE OF ANY TESTING REQUIRING THE PRESENCE OF THE ENGINEER AND/OR CITY STAFF.

4. THE CONTRACTOR IS TO RECEIVE THE APPROVAL OF THE ENGINEER AND THE CITY FOR ANY PROPOSED CHANGES TO THE PLANS OR STANDARD REQUIREMENTS.

5. A BUILDING DEPARTMENT PLUMBING PERMIT IS REQUIRED FOR UTILITIES BEYOND THE METER OR ON PRIVATE PROPERTY.

6. A PUBLIC IMPROVEMENT GUARANTEE AGREEMENT OR A PUBLIC WORKS PERMIT, A PRE-CONSTRUCTION MEETING WITH THE CITY OF WEST LINN, AND INSTALLATION OF EROSION CONTROL MEASURES ARE REQUIRED PRIOR TO BEGINNING CONSTRUCTION.

7. PRIOR TO SITE CLEARING, 8' TALL CHAIN-LINK FENCING SHALL BE PLACED AT TREE EASEMENT BOUNDARIES. THE CITY ARBORIST SHALL INSPECT & APPROVE ALL ONSITE TREE PROTECTION MEASURES PRIOR TO THE START OF THE SITE WORK. IT IS THE CONTRACTOR'S RESPONSIBILITY TO CONTACT THE CITY ARBORIST AND ARRANGE FOR THIS APPROVAL TO TAKE PLACE. NO PERMITS WILL BE ISSUED FROM ENGINEERING, PLANNING, OR BUILDING DEPARTMENTS WITHOUT TREE PROTECTION APPROVAL FROM THE CITY ARBORIST. ALL TREE PROTECTION MEASURES SHALL REMAIN IN PLACE AND FULLY FUNCTIONAL FOR THE ENTIRE TIME THAT SITE WORK AND CONSTRUCTION IS TAKING PLACE.

8. A CITY REPRESENTATIVE AND A REPRESENTATIVE OF THE ENGINEER MUST BE PRESENT AT ALL TESTING AND THE CITY SHALL BE FURNISHED A COPY OF ALL TEST RESULTS. IF ENGINEER OR CITY DO NOT WITNESS TESTING, CONTRACTOR WILL BE REQUIRED TO RE-TEST.

9. ALL FEES FOR STREET TREES SHALL BE PAID TO THE CITY OF WEST LINN PARKS AND RECREATION DEPARTMENT.

10. NO BUILDING PERMITS WILL BE GIVEN UNTIL THE IMPROVEMENTS HAVE BEEN ACCEPTED BY THE CITY AS COMPLETE AND THE PLAT HAS BEEN RECORDED.

11. CONTRACTOR SHALL VERIFY DEPTH AND LOCATION OF EXISTING UTILITIES AND POINTS OF CONNECTION PRIOR TO ORDERING MANHOLES. IF DISCREPANCIES ARE FOUND, CONTRACTOR SHALL NOTIFY THE ENGINEER.

WATER NOTES

1. WATER MAINS SHALL BE DUCTILE IRON PIPE CONFORMING TO AWWA C151 CLASS 52. PIPE IS TO HAVE CEMENT MORTAR LINING AND BITUMINOUS SEAL COAT CONFORMING TO AWWA C104. JOINTS ARE TO BE PUSH-ON RUBBER GASKETED JOINTS UNLESS NOTED OTHERWISE ON THE PLAN. PIPE FITTINGS ARE TO BE OF THE SAME MATERIAL AND CLASS AS PIPE OF OF DOMESTIC ORIGIN. ALL WATER MAINS SHALL BE WRAPPED WITH POLYETHYLENE ENCASEMENT. ANSI/AWWA 405/A21.5

2. WATER MAINS HAVE A MINIMUM COVER OF 36".

3. RESTRAINED JOINTS AT ALL JOINTS WITH FIELD LOC GASKETS TO BE PROVIDED AT ALL CHANGES IN DIRECTION AND BRANCHES.

4. GATE VALVES SHALL BE RESILIENT SEAT, NON-RISING STEM WITH "O" RING PACKING, COMPLYING WITH AWWA CLASS "C" SPECIFICATIONS. THE VALVES SHALL BE DESIGNED TO WITHSTAND A WORKING PRESSURE OF 150 PSI. GATE VALVES SHALL BE FURNISHED WITH A TWO-INCH SQUARE OPERATING NUT AND SHALL OPEN COUNTERCLOCKWISE WHEN VIEWING FROM ABOVE. BUTTERFLY VALVES SHALL BE RUBBER SEAT TYPE AND BUBBLE-TIGHT AT 150 PSI, AND SHALL CONFORM TO AWWA C504. BUTTERFLY VALVES SHALL BE MUELLER OR APPROVED EQUAL. OPERATING NUT SHALL BE LOCATED ON THE SIDE OF THE MAIN SHOWN ON THE PLANS. VALVE BOXES SHALL BE "VANCOUVER" PATTERN.

5. FIRE HYDRANTS SHALL CONFORM WITH AWWA SPECIFICATION C-502. PUMPER OUTLET IS TO FACE THE DIRECTION OF ACCESS. ACCEPTABLE MODELS ARE MUELLER CENTURION A-423 OR CLOW MEDALLION F-2545. HYDRANT COLOR SHALL BE SAFETY YELLOW.

6. GRANULAR BACKFILL (3/4"-0) IS TO BE COMPACTED TO 95% MAXIMUM DRY DENSITY PER AASHTO T 180 TEST METHOD AND NATIVE MATERIAL SHALL BE COMPACTED TO 95% OF IN-PLACE DRY DENSITY OF SURROUNDING SOIL. EXCAVATION, BEDDING, AND BACKFILL SHALL BE IN ACCORDANCE WITH DIVISION 204 OF THE CITY OF WEST LINN STANDARD CONSTRUCTION SPECIFICATIONS.

7. SERVICE LATERALS SHALL BE TYPE K COPPER LATERAL SIZES SHALL BE 1". FOR DOUBLE SERVICES TWO 1" WATER SERVICES SHALL BE LAID SIDE BY SIDE. CORPORATION STOPS SHALL BE MUELLER B-25008 300 PSI BALL TYPE CORP (SEE WL-RD274). ANGLE METER STOP SHALL BE MUELLER B-24258 FULL PORT 300 PSI BALL VALVE. METER BOXES SHALL BE DFW PLASTICS MODEL DFW486WBC. METER BOXES ARE TO BE INSTALLED 3/4" ABOVE FINISH GRADE AND 2-1/2" FROM THE CURB IN PLANTER STRIPS OR FLUSH WITH SIDEWALK SURFACE IN A SIDEWALK.

8. ALL WATERLINES WILL BE PRESSURE TESTED AND PURIFICATION TESTED BEFORE CONNECTION TO THE CITY WATER SYSTEM. PRESSURE TEST SHALL BE CONDUCTED AT 180 PSI OR 1.5 TIMES THE NORMAL WORKING PRESSURE, WHICHEVER IS HIGHER AND SHALL MEET THE REQUIREMENTS OF DIVISION 403.14 OF THE WEST LINN PUBLIC WORKS STANDARD CONSTRUCTION SPECIFICATIONS.

9. CHLORINATION SHALL CONFORM WITH DIVISION 403.14 OF THE W.L.S.C.S.

10. DO NOT CONNECT NEW PIPE TO EXISTING PIPE PRIOR TO TESTING. THE CITY OF WEST LINN REQUIRES ACCEPTANCE OF NEW WATERLINE PRIOR TO CONNECTION TO EXISTING WATER SYSTEM.

11. A PLUMBING PERMIT IS REQUIRED FOR SERVICE LATERAL INSTALLATIONS BEYOND THE WATER METER.

12. ALL MATERIALS, INSTALLATION, TESTS, AND CHLORINATION TO BE IN STRICT ACCORDANCE WITH THE CITY OF WEST LINN PUBLIC WORKS STANDARD CONSTRUCTION SPECIFICATIONS, AND THE OREGON STATE HEALTH DIVISION ADMINISTRATION RULES, CHAPTER 333 DIVISION 61.

STREET NOTES

1. NEW STREET SECTIONS ARE TO BE CLEARED OF ALL SURFACE VEGETATION AND OTHER MISCELLANEOUS STRUCTURES OR MATERIALS. GRUB IMPROVEMENT AREAS TO REMOVE ALL BURIED VEGETATIVE MATTER AND DEBRIS TO A DEPTH OF 8" BELOW SUBGRADE. PROPERLY DISPOSE OF ALL WASTE MATERIAL.

2. STREET SUBGRADE SHALL CONFORM TO DIVISION 501 OF THE CITY OF WEST LINN STANDARD CONSTRUCTION SPECIFICATIONS. AREAS TO RECEIVE FILL ARE TO TO INSPECTED BY CITY OF WEST LINN PERSONNEL PRIOR TO PLACEMENT OF THE FILL. THE CONTRACTOR SHALL HAVE FILL AREAS TESTED FOR COMPACTION BY A CERTIFIED TESTING LAB IN ACCORDANCE WITH W.L.S.C.S. DIVISION 501.03.08. SUCH TESTING WILL BE AT THE CONTRACTOR'S EXPENSE.

3. AGGREGATE BASE ROCK SHALL CONFORM TO THE REQUIREMENTS OF W.L.S.C.S. DIVISION 205. BASE COURSE SHALL BE 1-1/2"-0 CRUSHED ROCK AND LEVELING COURSE SHALL BE 3/4"-0. CITY OF WEST LINN REQUIRES A PROOF ROLL WITH A LOADED 10 YARD DUMP TRUCK OF THE SUBGRADE PRIOR TO PLACEMENT OF THE ROCK AND AGAIN AFTER PLACEMENT OF THE BASE ROCK AND PRIOR TO PAVING. ALL UNDERGROUND UTILITIES INCLUDING LATERALS, SERVICES, AND POWER OR GAS CONDUITS WILL BE IN PLACE BEFORE SUBGRADE PROOF ROLL WILL TAKE PLACE.

4. ASPHALT CONCRETE SHALL CONFORM TO THE REQUIREMENTS OF W.L.S.C.S. DIVISION 205. 2" BASE LIFT SHALL BE LEVEL 2 A.C. AND 2" FINAL LIFT SHALL BE LEVEL 2 A.C. MEETING THE SPECIFICATIONS OF W.L.S.C.S. DIVISION 505. THE TOP LIFT OF ASPHALT CONCRETE SHALL NOT BE PLACED PRIOR TO RECEIVING PERMISSION FROM THE CITY OF WEST LINN ENGINEERING DEPARTMENT.

5. CONSTRUCT CURB AND GUTTER USING 3300 PSI CONCRETE MEETING THE SPECIFI- CATIONS OF W.L.S.C.S. DIVISION 205 (AFTER 28 DAYS) WITH MAXIMUM 1-1/2" AGGREGATE SIZE. CONTRACTION JOINTS AT 15' MAXIMUM ON CENTERS. HANDICAP RAMPS SHALL BE CONSTRUCTED AT EACH CURB RETURN AT INTERSECTIONS BY CONTRACTOR UNLESS OTHERWISE NOTED ON THE PLANS. A PROOF ROLL OF THE CURBLINES IS REQUIRED PRIOR TO POURING CURBS.

6. ALL MATERIALS, INSTALLATION, TESTS, AND INSPECTIONS TO BE IN STRICT ACCORDANCE WITH CITY OF WEST LINN PUBLIC WORKS STANDARD CONSTRUCTION SPECIFICATIONS.

7. A STREET CONSTRUCTION ENCROACHMENT PERMIT OR SIMILAR PERMIT MAY BE REQUIRED FROM THE CITY OF WEST LINN. CONSTRUCTION PERMIT FEES OR OTHER SIMILAR FEES OR BONDING REQUIRED OF THE CONTRACTOR WILL BE THE CONTRACTOR'S RESPONSIBILITY TO OBTAIN.

8. MONUMENT BOXES WILL BE REQUIRED AT ALL STREET CENTERLINE INTERSECTIONS, POINTS OF CURVATURE AND POINTS OF TANGENCY. BOXES SHALL CONFORM TO CLACKAMAS COUNTY SURVEYOR REQUIREMENTS.

STORM SEWER NOTES

1. A 24-INCH OR LESS STORM DRAIN PIPE IS PREFERRED TO BE SEAMLESS RIBBED PVC PIPE CONFORMING TO ASTM F 794. WHERE LARGER PIPE IS REQUIRED OR LACK OF COVER PREVENTS USE OF RIBBED PVC PIPE, PIPE SHALL BE CLASS 3 NON-REINFORCED, CONCRETE PIPE CONFORMING TO ASTM C14, REINFORCED CONCRETE PIPE CONFORMING TO ASTM C-76, CLASS IV, OR DUCTILE IRON PIPE CONFORMING TO AWWA C151 CLASS 52. RUBBER JOINTS ARE REQUIRED FOR ALL CONCRETE PIPE. SIX INCH AND SMALLER STORM DRAIN PIPE SHALL CONFORM TO ASTM D 3034 PVC PIPE.

2. GUTTER INLETS SHALL BE POURED IN-PLACE CONCRETE WITH A MINIMUM COMPRESSIVE STRENGTH OF 3300 PSI. FRAME SHALL BE FABRICATED OF STRUCTURAL STEEL, ASTM A-7, A-36, A-373 PER OREGON STANDARD DRAWING RD366 AND RD365.

3. MANHOLE BASE MAY BE POURED IN PLACE CONCRETE WITH A MINIMUM COMPRESSIVE STRENGTH OF 3300 PSI OF PRECAST. MANHOLE RISERS AND TOPS SHALL BE PRECAST SECTIONS WITH A MINIMUM COMPRESSIVE STRENGTH OF 4000 PSI. TOPS SHALL BE ECCENTRIC CONES EXCEPT WHERE INSUFFICIENT HEADROOM REQUIRES FLAT TOPS. INTERIOR DIMENSIONS NOTED ON THE PLANS ARE MINIMUMS. SOME OR ALL OF THE STORM DRAIN REQUIRED WILL BE OVERSIZED MANHOLES, CONTRACTOR SHALL CHECK WITH MANHOLE MANUFACTURER FOR ACTUAL SIZE OF MANHOLE NEEDED FOR TYPE AND SIZE OF PIPE TO BE USED. INVERTS SHALL BE CONSTRUCTED SO AS TO PROVIDE SMOOTH FLOW-THROUGH CHARACTERISTICS. PIPE SHALL BE CONNECTED TO MANHOLE BY MEANS OF A FLEXIBLE CONNECTION AND SHALL HAVE A SHEAR JOINT LOCATED 18" OUTSIDE OF THE MANHOLE.

4. ALL MANHOLES LOCATED IN OUTSIDE PAVED AREAS REQUIRE TAMPER PROOF LIDES AND LID SHALL BE SET 12 INCHES ABOVE PROPOSED GRADE.

5. CLEANOUT PIPE, FITTINGS, AND JOINTS SHALL BE THE SAME SPECIFICATIONS AS FOR PIPE. CASTINGS ARE SHOWN ON DETAILS AND SHALL CONFORM TO ASTM A48 (GRADE 30). CLEANOUT RISER SHALL MATCH DOWNSTREAM PIPE DIAMETER.

6. GRANULAR BACKFILL (3/4"-0) IS TO BE COMPACTED TO 95% MAXIMUM DRY DENSITY PER AASHTO T-180 TEST METHOD AND NATIVE MATERIAL SHALL BE COMPACTED TO 95% OF IN-PLACE DRY DENSITY OF SURROUNDING SOIL.

7. STORM DRAIN SERVICE LATERALS SHALL BE 4" PIPE CONFORMING TO THE SAME SPECIFICATIONS AS THE STORM DRAIN MAIN LINES. SERVICES LATERALS SHALL BE INSTALLED TO A POINT BEYOND THE LINE OR UTILITY EASEMENT AS SHOWN ON THE PLAN. THE SERVICE LATERAL SHALL BE PLUGGED WITH 4" RUBBER RING PLUG, AND THE LOCATION OF THE LATERALS END MARKED WITH A 2'X4" STAKE PAINTED WHITE WITH THE DEPTH OF THE LATERAL MEASURED FROM THE GROUND TO THE INVERT.

8. RIPRAP WHERE NOTED ON THE PLANS IS TO BE CLASS 50 IN ACCORDANCE WITH OREGON STATE HIGHWAY DIVISION SPECIFICATION 714. 9. PRIVATE CATCHBASIN SHALL BE TRAPPED AND SUMPED GIBSON STEEL PRE-FABRICATED CATCHBASIN OR APPROVED EQUAL.

10. STORM DRAINS SHALL BE TESTED FOR DEFLECTION IN ACCORDANCE WITH DIVISION 601.03.11 AND VIDEO INSPECTED IN ACCORDANCE WITH DIVISION 601.03.12 OF THE WEST LINN STANDARD CONSTRUCTION SPECIFICATIONS. ALL TESTS SHALL BE WITNESSED BY THE ENGINEER AND A REPRESENTATIVE OF THE CITY.

11. A PLUMBING PERMIT FORM THE CITY OF WEST LINN BUILDING DEPARTMENT IS REQUIRED FOR STORM DRAINS OUTSIDE THE RIGHT OF WAY.

12. ALL MATERIALS, INSTALLATION, TESTS, AND INSPECTIONS TO BE IN STRICT ACCORDANCE WITH THE CITY OF WEST LINN STANDARD CONSTRUCTION SPECIFICATIONS.

13. DETENTION POND PLANTINGS TO CONFORM TO PLANTING PLANS, SHEET L-1.

SANITARY SEWER NOTES

1. PIPE SHALL BE PVC SEWER PIPE CONFORMING TO ASTM D-3034 SDR 35. MINIMUM STIFFNESS SHALL BE 46 PSI AND JOINT TYPE SHALL BE ELASTOMERIC GASKET CONFORMING TO ASTM D-3212.

2. MANHOLE BASE SHALL BE POURED IN PLACE CONCRETE BASE WITH A MINIMUM COMPRESSIVE STRENGTH OF 3300 PSI OR PRECAST. MANHOLE RISERS AND TOPS SHALL BE PRECAST SECTIONS WITH MINIMUM COMPRESSIVE STRENGTH OF 4000 PSI. TOPS SHALL BE ECCENTRIC CONES EXCEPT WHERE INSUFFICIENT HEADROOM REQUIRES FLAT TOPS. INVERTS SHALL BE CONSTRUCTED SO AS TO PROVIDE SMOOTH FLOW-THROUGH CHARACTERISTICS AND CHANNELS MUST BE ABLE TO PASS A 7"X30" CYLINDER INTO PIPES. PVC PIPE SHALL BE CONNECTED TO MANHOLE BY MEANS OF A FLEXIBLE CONNECTION AND SHALL HAVE A SHEAR JOINT LOCATED 18" OUTSIDE OF MANHOLE. CEMENT GROUT FOR CONNECTING PVC SEWER PIPE TO MANHOLE WILL NOT BE PERMITTED. SEE OREGON STANDARD DRAWING RD340.

3. ALL MANHOLES LOCATED OUTSIDE PAVED AREAS REQUIRE TAMPER PROOF LIDS AND THE LID SHALL BE SET 12" ABOVE THE PROPOSED GRADE.

4. CLEANOUT PIPE, FITTINGS, AND JOINTS SHALL BE THE SAME SPECIFICATIONS AS FOR PIPE. CASTINGS ARE AS SHOWN ON DETAIL AND SHALL CONFORM TO ASTM A48 (GRADE 30). CLEANOUT RISER SHALL MATCH DOWNSTREAM PIPE DIAMETER. FRAME SHALL SIT ON 18"X24" CONCRETE PAD.

5. GRANULAR BACKFILL (3/4"-0) IS TO BE COMPACTED TO 95% MAXIMUM DRY DENSITY PER AASHTO T-180 TEST METHOD AND NATIVE MATERIAL SHALL BE COMPACTED TO 95% OF IN-PLACE DRY DENSITY OF SURROUNDING SOIL. EXCAVATION, BEDDING, AND BACKFILL SHALL BE IN ACCORDANCE WITH DIVISION 204 OF THE CITY OF WEST LINN STANDARD CONSTRUCTION SPECIFICATIONS. BACKFILL UNDER NEW STREETS SHALL BE CLASS "B" AND BACKFILL IN EXISTING STREETS SHALL BE CLASS "E".

6. PVC SERVICE LATERALS SHALL BE 4" PIPE CONFORMING TO THE SAME SPECIFICATIONS AS THE SEWER MAINS. SERVICE LATERALS SHALL BE INSTALLED TO A POINT BEYOND THE LINE OF THE SEWER OR UTILITY EASEMENT AS SHOWN ON THE PLAN. THE SERVICE LATERAL SHALL BE PLUGGED WITH A 4" RUBBER RING PLUG, AND THE LOCATION OF THE LATERAL'S END MARKED WITH A 2"X4" STAKE PAINTED GREEN WITH THE DEPTH OF THE LATERAL MEASURED FROM THE GROUND TO THE INVERT.

7. SANITARY SEWER PIPE AND APPURTENANCES SHALL BE TESTED FOR LEAKAGE IN ACCORDANCE WITH W.L.S.C.S. DIVISION 301.03.09 AND MANHOLES SHALL BE VACUUM TESTED IN ACCORDANCE WITH W.L.S.C.S. DIVISION 302.03.07. ALL TESTS SHALL BE WITNESSED BY THE ENGINEER AND THE CITY OF WEST LINN. CONTRACTOR IS RESPONSIBLE FOR COORDINATING TESTING SO THAT ALL TEST SHALL BE PASSED AND NEW LINE SHALL BE ACCEPTED PRIOR TO CONNECTION TO EXISTING SYSTEM.

8. A PLUMBING PERMIT FROM THE CITY OF WEST LINN BUILDING DEPARTMENT IS REQUIRED FOR SANITARY SEWER LATERALS OUTSIDE THE RIGHT OF WAY

9. ALL MATERIALS, INSTALLATION, TEST, AND INSPECTIONS TO BE MADE IN STRICT ACCORDANCE WITH CITY OF WEST LINN PUBLIC WORKS STANDARD CONSTRUCTION SPECIFICATIONS.

EROSION CONTROL SUMMARY:

1. THE INTENT OF THE REQUIREMENT IS TO PREVENT SILTATION FROM REACHING STORM DRAIN SYSTEMS AND DRAINAGE WAYS.

2. THE MINIMUM MEASURES NEED TO BE MADE ON ALL PROJECTS.

A) A GRAVEL PAD, AT LEAST 50 FEET LONG, IS REQUIRED WHERE VEHICLES WILL LEAVE THE CONSTRUCTION SITE.

B) A SEDIMENT BARRIER IS TO BE CONSTRUCTED OF STRAW BALES OR A SEDIMENT FENCE WHERE NOTED IN THE DETAILS OR WHERE SEDIMENT WILL CROSS OUTSIDE THE WORK AREA.

C) WHERE EXCAVATED MATERIAL IS PLACED ON HARD SURFACES (SUCH AS STREETS) MATERIAL MUST BE BROOMED OR SCRAPED CLEAN AS SOON AS POSSIBLE.

D) RIPRAP EXITS FROM ALL CULVERTS AND STORM DRAIN PIPES DRAINING INTO THE DITCHES OR SWALES. RIPRAP IS TO BE CLASS 50 RIPRAP OR LARGER OR AS NOTED ELSEWHERE IN THE PLANS.

E) RESEED OR COVER DISTURBED AREAS AS SOON AS IS POSSIBLE AND PRACTICAL BUT NO LATER THAN THE COMPLETION OF CONSTRUCTION ON THE OTHER PHASES OF WORK. EROSION CONTROL MEASURES SUCH AS HAY BALES AND SILT FENCES MUST REMAIN IN PLACE UNTIL SEEDED AREAS SHOW GROWTH SUBSTANTIAL TO PREVENT EROSION.

F) PHASES CONSTRUCTION ACTIVITIES TO MINIMIZE AREAS OF DISTURBANCE. MASS GRADING OF ENTIRE SITE IS NOT ALLOWED.

APPROVED FOR CONSTRUCTION BY CITY OF WEST LINN
This approval is only for general conformance with the design concept and general compliance with applicable codes and requirements and shall not be construed as relieving the Design Engineer of full responsibility for accuracy and completeness of the drawings. This plan review approval does not prevent the City from requiring further code corrections in the field.
DATE: 6/22/2020

GENERAL GRADING AND EROSION CONTROL (PART 1):

1. APPROVAL OF THIS EROSION CONTROL (ESC) PLAN DOES NOT CONSTITUTE AN APPROVAL OF PERMANENT ROAD OR DRAINAGE DESIGN (E.G. SIZE AND LOCATION OF ROADS, PIPES, RESTRICTORS, CHANNELS, RETENTION FACILITIES, UTILITIES, ETC.)

2. THE IMPLEMENTATION OF THESE ESC PLANS AND THE CONSTRUCTION, MAINTENANCE, REPLACEMENT, AND UPGRADING OF THESE ESC FACILITIES IS THE RESPONSIBILITY OF THE APPLICANT/CONTRACTOR UNTIL ALL CONSTRUCTION IS COMPLETED AND APPROVED, AND VEGETATION OF LANDSCAPING IS ESTABLISHED.

3. THE ESC FACILITIES ON THIS PLAN MUST BE CONSTRUCTED IN CONJUNCTION WITH ALL CLEARING AND GRADING ACTIVITIES, AND IN SUCH A MANNER AS TO ENSURE THAT SEDIMENT LADEN WATER DOES NOT ENTER THE DRAINAGE SYSTEM OR VIOLATE APPLICABLE WATER STANDARDS.

4. THE ESC FACILITIES SHOWN ON THIS PLAN ARE THE MINIMUM REQUIREMENTS FOR ANTICIPATED SITE CONDITIONS. DURING THE CONSTRUCTION PERIOD, THESE ESC FACILITIES SHALL BE UPGRADED AS NEEDED FOR UNEXPECTED STORM EVENTS AND TO ENSURE THAT SEDIMENT LADEN WATER DOES NOT LEAVE THE SITE.

5. THE ESC FACILITIES SHALL BE INSPECTED DAILY BY THE APPLICANT/CONTRACTOR AND MAINTAINED AS NECESSARY TO ENSURE THEIR CONTINUED FUNCTIONING.

6. THE ESC FACILITIES ON INACTIVE SITES SHALL BE INSPECTED AND MAINTAINED A MINIMUM OF ONCE A MONTH, OR WITHIN 24 HOURS FOLLOWING A STORM EVENT.

7. AT NO TIME SHALL MORE THAN ONE FOOT OF SEDIMENT BE ALLOWED TO ACCUMULATE WITHIN A TRAPPED CATCH BASIN. ALL CATCH BASINS AND CONVEYANCE LINES SHALL BE CLEANED PRIOR TO PAVING. THE CLEANING OPERATION SHALL NOT FLUSH SEDIMENT LADEN WATER INTO THE DOWNSTREAM SYSTEM.

8. STABILIZED CONSTRUCTION ENTRANCES SHALL BE INSTALLED AT THE BEGINNING OF CONSTRUCTION AND MAINTAINED FOR THE DURATION OF THE PROJECT. ADDITIONAL MEASURES MAY BE REQUIRED TO ENSURE THAT ALL PAVED AREAS ARE KEPT CLEAN FOR THE DURATION OF THE PROJECT.

GENERAL GRADING AND EROSION CONTROL (PART 2):

1. CLEAN WASTE MATERIAL EXCAVATED FROM ROAD CUT OR TRENCHING AREAS NOT USED IN STREET FILL AREAS MAY BE SPREAD EVENLY ACROSS LOT AREAS IN DEPTHS NOT TO EXCEED SIX INCHES, EXCEPT WHERE NOTED OTHERWISE ON THE PLANS.

2. DURING CONSTRUCTION, STRAW BALES, CUTOFF TRENCHES OR SOME OTHER METHOD OF RUNOFF CONTROL SHALL BE USED TO PREVENT EROSION AND/OR SILTATION FROM CROSSING OUTSIDE THE WORK AREA BOUNDARIES.

3. LARGE ORGANIC MATERIAL, MISCELLANEOUS PIPE OR CONSTRUCTION MATERIAL MUST BE REMOVED FROM THE SITE AND DISPOSED OF PROPERLY.

4. NO FILLING OR CUTTING SHALL BE DONE OUTSIDE OF APPROVED GRADING AREAS.

5. ALL EROSION CONTROL FACILITIES SHALL MEET THE REQUIREMENTS OF THE CLACKAMAS COUNTY DEPARTMENT OF UTILITIES, EROSION PREVENTION AND SEDIMENT CONTROL PLANS TECHNICAL GUIDANCE HANDBOOK (ECTGH), REVISED AUGUST, 1994; CHAPTER 31 OF THE COMMUNITY DEVELOPMENT CODE; AND THE OREGON ADMINISTRATIVE RULES.

SEEDING/MULCHING:

1. ALL AREAS DISTURBED DURING CONSTRUCTION TO BE GRADED TO DRAIN AND COMPACTED TO A MINIMUM OF 90% OF AASHTO T-99 IMMEDIATELY AFTER INSTALLATION OF UTILITIES OR GRADING.

2. RECOMMENDED SEED MIXTURE: 80% ELKA DWARF PERENNIAL RYEGRASS AND 20% CREEPING RED FESCUE, BY WEIGHT. APPLICATION RATE SHALL BE 100 POUNDS MINIMUM PER ACRE.

3. FERTILIZER SHALL BE 12-16-8 WITH 50% OF THE NITROGEN DERIVED FROM UREA FORMALDEHYDE, AND APPLIED AT A RATE OF 400 POUNDS PER ACRE.

4. SEED AND MULCH AT A RATE OF 2000 LBS/AC WITH HEAVY BONDING AGENT OR NETTING AND ANCHORS. MULCH SHALL BE A WOOD CELLULOSE FIBER OR OTHER MATERIAL SUITABLE FOR HYDROMULCHING.

5. TEMPORARY OR PERMANENT HYDROSEEDING ARE ACCEPTABLE SEEDING AND MULCHING MUST BE PROVIDED WHENEVER PERENNIAL COVER CANNOT BE ESTABLISHED ON SITES WHICH WILL BE EXPOSED FOR 60 DAYS OR MORE.

SEDIMENT FENCE:

1. THE FILTER FABRIC SHALL BE PURCHASED IN A CONTINUOUS ROLL CUT TO THE LENGTH OF THE BARRIER TO AVOID USE OF JOINTS. WHEN JOINTS ARE NECESSARY, FILTER CLOTH SHALL BE SPLICED TOGETHER ONLY AT A SUPPORT POST, WITH A MINIMUM 6-INCH OVERLAP, AND BOTH ENDS SECURELY FASTENED TO THE POST.

2. THE FILTER FABRIC FENCE SHALL BE INSTALLED TO FOLLOW THE CONTOURS, WHERE FEASIBLE. THEN FENCE POSTS SHALL BE SPACED A MAXIMUM OF SIX FEET APART AND DRIVEN SECURELY INTO THE GROUND A MINIMUM OF 18 INCHES.

3. A TRENCH SHALL BE EXCAVATED, ROUGHLY 6 INCHES WIDE BY 6 INCHES DEEP, UPSLOPE AND ADJACENT TO THE WOOD POST TO ALLOW THE FILTER FABRIC TO BE BURIED. BURY THE BOTTOM OF THE FABRIC 6" VERTICALLY BELOW FINISHED GRADE. ALL AREAS OF FILTER FABRIC TRENCH SHALL BE COMPACTED.

4. THE FILTER FABRIC SHALL BE INSTALLED WITH STITCHED LOOPS OVER FENCE POSTS. THE FENCE POST SHALL BE CONSTRUCTED OF 2" X 2" FIR, PINE, OR STEEL. THE FENCE POST MUST BE A MINIMUM OF 48" LONG. THE FILTER FABRIC SHALL NOT BE STAPLED OR ATTACHED TO EXISTING TREES.

5. SEDIMENT FENCES SHALL BE REMOVED WHEN THEY HAVE SERVED THEIR USEFUL PURPOSE, BUT NOT BEFORE THE UPSLOPE AREA HAS BEEN PERMANENTLY STABILIZED.

6. SEDIMENT FENCES SHALL BE INSPECTED BY APPLICANT/CONTRACTOR IMMEDIATELY AFTER EACH RAINFALL, AND AT LEAST DAILY DURING PROLONGED RAINFALL. ANY REQUIRED REPAIRS SHALL BE MADE IMMEDIATELY.

23190 BLAND CIRCLE SUBDIVISION
TAX MAP 2S1E 35AB
TAX LOT 9100
CITY OF WEST LINN, OREGON

CONSTRUCTION NOTES

REVISIONS

NO.	DATE	DESCRIPTION
0	02/19	PLANNING SUBMITTAL
1	08/19	PLANNING RESUBMITTAL
2	10/19	ENGINEERING 1ST SUBMITTAL
3	03/20	ENGINEERING 2ND SUBMITTAL

EMERIO Design
6445 SW FALLBROOK PLACE, SUITE 100
BEAVERTON, OREGON 97008
TEL: (503) 746-8812
FAX: (503) 639-9592
www.emeriodesign.com

REGISTERED PROFESSIONAL ENGINEER
54665
DocuSigned by: Eric D. Evans
936474C69EA2449...
OREGON
JULY 11, 2006
ERIC DANIEL EVANS
EXPIRES: 12/31/2021

SHEET 2 OF 30

FILE:P:\0542-001 23190 S Bland Circle\dwg\civil\Engineering Set\0542-001_02note, Layout: 2 CONSTRUCTION NOTES, Plot Date: 5/22/2020 3:34 PM, by: Josh Ayers

DocuSign Envelope ID: CFBE966A-192B-4378-9E32-B4C08CAC394B

APPROVED FOR CONSTRUCTION BY
CITY OF WEST LINN
This approval is only for general conformance with the design concept and general compliance with applicable codes and requirements and shall not be construed as relieving the Design Engineer of full responsibility for accuracy and completeness of the drawings. This plan review approval does not prevent the City from requiring further code corrections in the field.
DATE: 10/7/2020 BY:

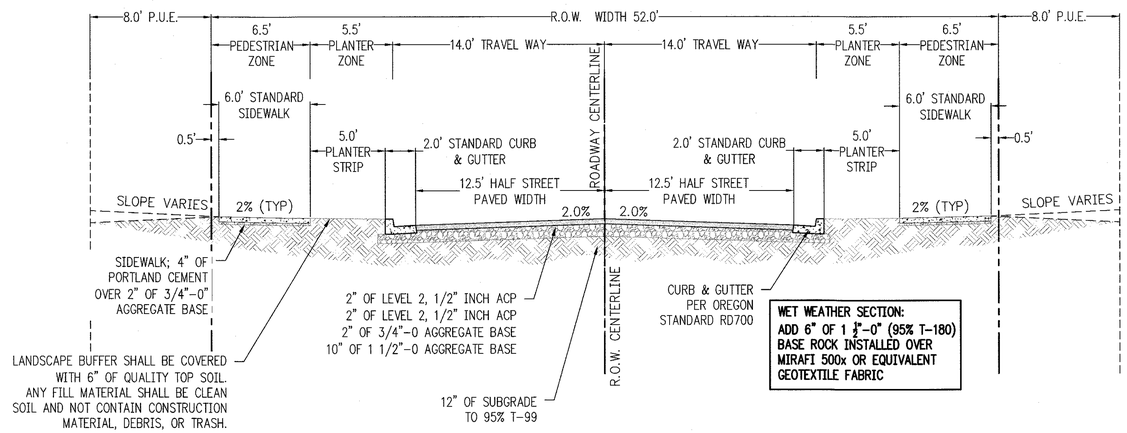

SECTION PER WL-RD012

DAHLIA & SATTER: 28' LOCAL ROAD W/ DETACHED SIDEWALKS - TYPICAL SECTION

SCALE: N.T.S.

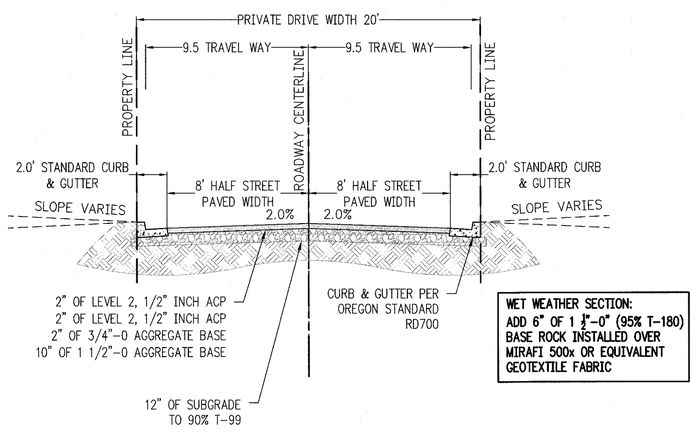

LOTS 16 & 17 PRIVATE DRIVE - TYPICAL SECTION

SCALE: N.T.S.

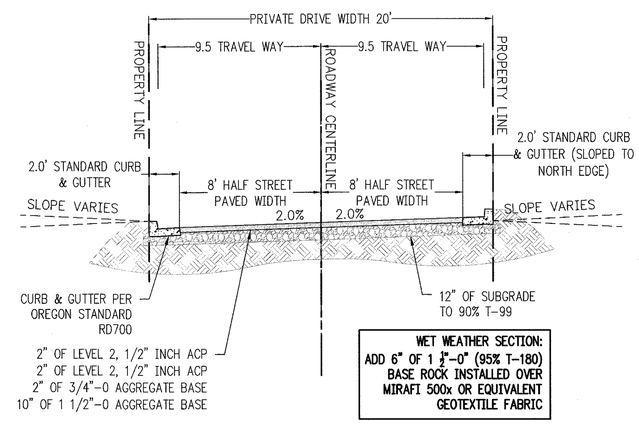

LOTS 9 & 10 PRIVATE DRIVE - TYPICAL SECTION

SCALE: N.T.S.

23190 BLAND CIRCLE SUBDIVISION
TAX MAP 2S1E 35AB
TAX LOT 9100
CITY OF WEST LINN, OREGON

TYPICAL STREET SECTIONS

REVISIONS

NO.	DATE	DESCRIPTION
0	02/19	PLANNING SUBMITTAL
1	08/19	PLANNING RESUBMITTAL
2	10/19	ENGINEERING 1ST SUBMITTAL
3	03/20	ENGINEERING 2ND SUBMITTAL

EMERIO Design
6445 SW FALLBROOK PLACE, SUITE 100
BEAVERTON, OREGON 97008
TEL: (503) 746-8812
FAX: (503) 639-9592
www.emeriodesign.com

REGISTERED PROFESSIONAL ENGINEER
54665
Digitally signed by Eric D. Evans
OREGON JULY 11, 2006
ERIC DANIEL EVANS
EXPIRES: 12/31/2021

SHEET 3 OF 31

FILE:P:\0542-001 23190 S Bland Circle\dwg\civil\Engineering Set\0542-001_03.stm, Layout: TYPICAL STREET SECTIONS, Plot Date: 5/22/2020 3:34 PM, by: Josh Ayers

DocuSign Envelope ID: CFBE966A-192B-4378-9E32-B4C08CAC394B

DEMOLITION KEY NOTES

1. REMOVE AND REPLACE SPEED LIMIT SIGN 35' SOUTH ALONG SALAMO RD. COORDINATE WITH CITY FOR WORK.
2. REMOVE EXISTING SIDEWALK & GUTTER
3. SAWCUT & REMOVE EXISTING AC.
4. REMOVE EXISTING AC & GRAVEL DRIVEWAY.
5. REMOVE EXISTING FENCING.
6. REMOVE EXISTING CULVERT.
7. REMOVE EXISTING AC DRIVEWAY UP TO LOT LINE.
8. REMOVE EXISTING BUILDING/STRUCTURE
9. REMOVE EXISTING CONCRETE AREAS
10. REMOVE EXISTING TREES (TYP.). SEE SHEET 3 & 4 FOR DETAILED TREE PLANS
11. INSTALL CONSTRUCTION ENTRANCE
12. DECOMMISSION EXISTING WELL PER STATE REQUIREMENTS.
13. COORDINATE WITH SERVICE PROVIDER PRIOR TO REMOVING OR RELOCATING CABLE UTILITES
14. EXISTING UNDERGROUND STORM PIPE OUTFALL FROM TAX LOT 9000 TO BE REMOVED. SEE SH. 8 FOR CONSTRUCTION NOTES.
15. REMOVE SEPTIC SYSTEM, TANK, & LEACH LINES PER STATE GUIDELINES & REQUIREMENTS.

GENERAL NOTES:

A. SEE SHEETS 5 AND 6 FOR TREE PRESERVATION PLAN. TREE PROTECTION TO BE INSTALLED BEFORE ANY SITE DEMOLITION, GRUBBING, OR CLEARING.

LEGEND

- BOUNDARY OF SITE
- LIMITS OF CONSTRUCTION
- EXISTING FENCE
- SILT FENCE
- TREE PROTECTION FENCE
- SS — SANITARY SEWER LINE
- SD — STORM DRAIN LINE
- G — GAS LINE
- W — WATER LINE
- FIRE HYDRANT
- WATER BLOWOFF
- STORM DRAIN MANHOLE
- CATCH BASIN / AREA DRAIN
- SANITARY SEWER MANHOLE
- UTILITY PEDESTAL
- UTILITY POLE
- UTILITY/LIGHT POLE
- LIGHT POLE
- DECIDOUS TREE
- EVERGREEN TREE
- REMOVE EXISTING TREE

APPROVED FOR CONSTRUCTION BY
CITY OF WEST LINN
This approval is only for general conformance with the design concept and general compliance with applicable codes and requirements and shall not be construed as relieving the Design Engineer of full responsibility for accuracy and completeness of the drawings. This plan review approval does not prevent the City from requiring further code corrections in the field.
DATE: 10/27/2020

40' 0 20' 40' 80'
SCALE: 1" = 40'

SURVEYOR'S NOTE

THE DATUM FOR THIS SURVEY IS BASED UPON OREGON REAL-TIME GNSS NETWORK (ORGN). NGVD29.

A TOPCON PS104B, TRIMBLE RS INSTRUMENTS WERE USED TO COMPLETE THIS SURVEY.

BOUNDARIES WERE DRAWN PER PLAT AND MONUMENTS FOUND. NO PROPERTY CORNERS WERE SET IN THIS SURVEY.

NO WARRANTIES ARE MADE AS TO MATTERS OF UNWRITTEN TITLE, SUCH AS ADVERSE POSSESSION, ESTOPPEL, ACQUIESCENCE, ETC.

THE UNDERGROUND UTILITIES AS SHOWN ON THIS MAP HAVE BEEN LOCATED FROM FIELD SURVEY OF ABOVE GROUND STRUCTURES AND AS MARKED BY OTHERS. THE SURVEYOR MAKES NO GUARANTEE THAT THE UNDERGROUND UTILITIES SHOWN COMPROMISE ALL SUCH UTILITIES IN THE AREA, EITHER IN SERVICE OR ABANDONED. THE SURVEYOR FURTHER DOES NOT WARRANT THAT THE UNDERGROUND UTILITIES ARE IN THE EXACT LOCATION INDICATED, ALTHOUGH HE DOES CERTIFY THAT THEY ARE LOCATED AS ACCURATELY AS POSSIBLE FROM INFORMATION AVAILABLE. THE SURVEYOR HAS NOT PHYSICALLY LOCATED THE UNDERGROUND UTILITIES. SUBSURFACE AND ENVIRONMENTAL CONDITIONS WERE NOT EXAMINED OR CONSIDERED AS A PART OF THIS SURVEY. NO STATEMENT IS MADE CONCERNING THE EXISTENCE OF UNDERGROUND OR OVERHEAD CONTAINERS OR FACILITIES THAT MAY AFFECT THE USE OR DEVELOPMENT OF THIS TRACT. THIS SURVEY DOES NOT CONSTITUTE A TITLE SEARCH BY SURVEYOR.

NO TITLE REPORT WAS SUPPLIED OR USED IN THE PREPARATION OF THIS MAP. THERE MAY EXIST EASEMENTS, CONDITIONS, OR RESTRICTIONS THAT COULD AFFECT THE TITLE OF THIS PROPERTY. NO ATTEMPT HAS BEEN MADE IN THIS SURVEY TO SHOW SUCH MATTERS THAT MAY AFFECT TITLE.

23190 BLAND CIRCLE SUBDIVISION
TAX MAP 2S1E 35AB
TAX LOT 9100
CITY OF WEST LINN, OREGON

EXISTING CONDITIONS & DEMO PLAN

REVISIONS

NO.	DATE	DESCRIPTION
0	02/19	PLANNING SUBMITTAL
1	08/19	PLANNING RESUBMITTAL
2	10/19	ENGINEERING 1ST SUBMITTAL
3	03/20	ENGINEERING 2ND SUBMITTAL

EMERIO Design
6445 SW FALLBROOK PLACE, SUITE 100
BEAVERTON, OREGON 97008
TEL: (503) 746-8812
FAX: (503) 639-9592
www.emeriodesign.com

REGISTERED PROFESSIONAL ENGINEER
54665
DocuSigned by: Eric D. Evans
ERIC DANIEL EVANS
EXPIRES: 12/31/2021

SHEET 4 OF 31

FILE P:\0542-001 23190 S Bland Circle\dwg\civ\Engineering Set\0542-001_04exist, Layout: 4 EXISTING CONDITIONS & DEMO PLAN, Plot Date: 5/22/2020 3:34 PM, by: Josh Ayers

DocuSign Envelope ID: CFBE966A-192B-4378-9E32-B4C08CAC394B

LEGEND

- RETAIN SIGNIFICANT TREE CANOPY
- REMOVE SIGNIFICANT TREE CANOPY
- RETAIN EVERGREEN TREE
- RETAIN DECIDUOUS TREE
- REMOVE EVERGREEN TREE
- REMOVE DECIDUOUS TREE
- TREE PROTECTION FENCING*

*TREE FENCING TO BE COMPRISED OF 6' CHAIN LINK ON 2" POST AT 10' SPACING DRIVEN 2' INTO GROUND.

30' 0 15' 30' 60'

SCALE: 1" = 30'

GENERAL TREE INVENTORY	
TOTAL PROPERTY AREA	284,010 SF (6.52 AC)
TOTAL TREE INVENTORY	223
TOTAL TREES RETAINED	38
TOTAL TREES REMOVED	185

SIGNIFICANT TREES INVENTORY	
ONSITE SIGNIFICANT TREE INVENTORY	63
SIGNIFICANT TREES RETAINED	15
SIGNIFICANT TREES REMOVED	48
EXISTING SIGNIFICANT TREE CANOPY COVERAGE	87,961 SF
TREE PRESERVATION AREA REQUIRED (20% OF EXISTING SIGNIFICANT TREE CANOPY)	17,592 SF
TREE PRESERVATION AREA PROVIDED	21,640 SF

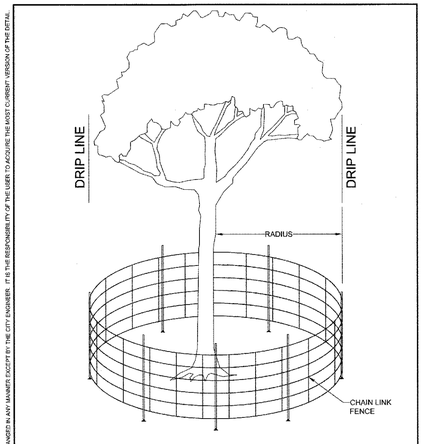

NOTE:
1. 6' CHAIN LINK ON 2" POST AT 10' SPACING, DRIVEN 2' INTO GROUND
RADIUS IS EITHER 1/2" PER CALIPER INCH OR
2. 10' OUTSIDE OF DRIPLINE - SEE PLANS

TREE PROTECTION FENCE

City of West Linn

DATE: 2010
DRAWING NO. WL-219
FILE NO.

THIS DETAIL DRAWING SHALL NOT BE ALTERED OR CHANGED IN ANY MANNER EXCEPT BY THE CITY ENGINEER. IT IS THE RESPONSIBILITY OF THE USER TO ACQUIRE THE MOST CURRENT VERSION OF THE DETAIL.

APPROVED FOR CONSTRUCTION BY CITY OF WEST LINN

This approval is only for general conformance with the design concept and general compliance with applicable codes and requirements and shall not be construed as relieving the Design Engineer of full responsibility for accuracy and completeness of the drawings. This plan review approval does not prevent the City from requiring further code corrections in the field.

DATE: 4/22/2020 BY: [signature]

23190 BLAND CIRCLE SUBDIVISION
TAX MAP 2S1E 35AB
TAX LOT 9100
CITY OF WEST LINN, OREGON

TREE PRESERVATION PLAN

REVISIONS

NO.	DATE	DESCRIPTION
0	02/19	PLANNING SUBMITTAL
1	08/19	PLANNING RESUBMITTAL
2	10/19	ENGINEERING 1ST SUBMITTAL
3	03/20	ENGINEERING 2ND SUBMITTAL

EMERIO Design
6445 SW FALLBROOK PLACE, SUITE 100
BEAVERTON, OREGON 97008
TEL: (503) 746-8812
FAX: (503) 639-9592
www.emeriodesign.com

REGISTERED PROFESSIONAL ENGINEER 54665 DocuSigned by: Eric D. Evans 93647AC69EA244 ERIC DANIEL EVANS EXPIRES: 12/31/2021

SHEET 5 OF 31

FILE:P:\0542-001 23190 S Bland Circle\dwg\civil\Engineering Set\0542-001_05tree, Layout: 5 TREE PRESERVATION PLAN, Plot Date: 6/19/2020 9:00 AM, by: Josh Ayers

DocuSign Envelope ID: CFBE966A-192B-4378-9E32-B4C08CAC394B

Tree No.	Svy. Type	Common Name	Scientific Name	Svy. DBH	DBH[1]	Single DBH[2]	C-Rad[3]	Condition[4]	Structure	Sig.?[5]	Comments	Treatment
50178	E	western red cedar	*Thuja plicata*	6	7	7	7	good	good	no		remove
50180	E	western red cedar	*Thuja plicata*	8	8	8	7	fair	good	no	epicormic growth at lower trunk	remove
50236	D	Oregon white oak	*Quercus garryana*	18	18	18	16	good	good	yes		retain
50329	D	Oregon white oak	*Quercus garryana*	44	47	47	39	good	fair	yes	multiple leaders, failed branches up to 6" diameter	remove
50344	D	wild plum	*Prunus americana*	6	8	8	10	poor	poor	no	stump sprout	remove
50345	D	wild plum	*Prunus americana*	8	10	10	10	poor	poor	no	partial uproot	remove
50385	D	orchard apple	*Malus domestica*	10	11	11	9	poor	poor	no	branch failures	remove
50446	D	Oregon white oak	*Quercus garryana*	10	10	10	10	good	fair	no	multiple leaders	remove
50449	D	Oregon white oak	*Quercus garryana*	6	5	5	6	good	fair	no	multiple leaders	remove
50452	D	Oregon white oak	*Quercus garryana*	10	10	10	11	good	fair	no	multiple leaders	remove
50467	D	Chinese willow	*Salix matsudana*	8	28	28	17	good	fair	no	multiple leaders at 2'	remove
50866	D	black locust	*Robinia pseudoacacia*	6	6	6	6	fair	fair	no	one sided, size estimated, not tagged because offsite	retain
50868	D	black locust	*Robinia pseudoacacia*	18	18	18	15	fair	fair	no	one sided, size estimated, not tagged because offsite	retain
50871	D	black locust	*Robinia pseudoacacia*	12	12	12	20	fair	fair	no	one sided, size estimated, not tagged because offsite	retain
50872	D	bigleaf maple	*Acer macrophyllum*	10	10	10	15	poor	poor	no	suppressed, overtopped by adjacent trees, size estimated, not tagged because offsite	retain
50873	D	bigleaf maple	*Acer macrophyllum*	16	16	16	20	good	fair	no	multiple leader, size estimated, not tagged because offsite	retain
50874	D	bigleaf maple	*Acer macrophyllum*	16	18	18	20	fair	fair	no	one sided, size estimated, not tagged because offsite	retain
50887	E	Port-Orford-cedar	*Chamaecyparis lawsoniana*	4	12	12	6	good	fair	no	multiple leaders at 6"	retain
50888	E	Port-Orford-cedar	*Chamaecyparis lawsoniana*	8	10	10	7	good	good	no		retain
50889	E	Douglas-fir	*Pseudotsuga menziesii*	8	8	8	11	good	good	no		retain
50896	E	western red cedar	*Thuja plicata*	14	13	13	12	good	good	no		retain
50897	E	Port-Orford-cedar	*Chamaecyparis lawsoniana*	12	24	24	12	good	fair	no	codominant at 3' with included bark	remove
50898	E	Port-Orford-cedar	*Chamaecyparis lawsoniana*	12	10	10	11	good	good	no		remove
50899	E	western red cedar	*Thuja plicata*	12	14	14	10	good	fair	no	competing upright leaders	remove
50900	E	western red cedar	*Thuja plicata*	14	18	18	14	good	fair	no	codominant at 6" with included bark	remove
50905	E	western red cedar	*Thuja plicata*	14	14	14	13	good	good	no		remove

Tree No.	Svy. Type	Common Name	Scientific Name	Svy. DBH	DBH[1]	Single DBH[2]	C-Rad[3]	Condition[4]	Structure	Sig.?[5]	Comments	Treatment
50906	E	western red cedar	*Thuja plicata*	12	12	12	12	good	good	no		remove
50911	D	black locust	*Robinia pseudoacacia*	10	12	12	21	fair	fair	no	one sided, significant lean	remove
50913	D	black locust	*Robinia pseudoacacia*	6	6	6	13	fair	fair	no	one sided	remove
50916	E	Port-Orford-cedar	*Chamaecyparis lawsoniana*	10	11	11	11	good	good	no		retain
50917	E	Port-Orford-cedar	*Chamaecyparis lawsoniana*	8	9	9	10	good	good	no		retain
50918	D	bigleaf maple	*Acer macrophyllum*	14	17	17	24	good	fair	no	multiple leaders	remove
50935	E	Port-Orford-cedar	*Chamaecyparis lawsoniana*	10	24	24	11	good	fair	no	codominant at 6" and 4'	remove
50936	E	Douglas-fir	*Pseudotsuga menziesii*	24	24	24	14	good	good	yes		retain
50937	E	western red cedar	*Thuja plicata*	12	14	14	12	good	good	no		retain
50938	E	western red cedar	*Thuja plicata*	10	11	11	10	good	good	no		remove
50939	E	Port-Orford-cedar	*Chamaecyparis lawsoniana*	12	16	16	12	good	fair	no	codominant at 5'	remove
50940	E	western red cedar	*Thuja plicata*	14	15	15	15	good	good	no		remove
50941	E	western red cedar	*Thuja plicata*	12	11	11	11	good	good	no		remove
50942	E	western red cedar	*Thuja plicata*	10	18	18	12	good	fair	no	codominant at 3' with included bark	remove
50957	D	black locust	*Robinia pseudoacacia*	10	11	11	10	fair	fair	no	one sided	remove
50960	E	western red cedar	*Thuja plicata*	14	14	14	15	good	good	no		remove
50961	E	western red cedar	*Thuja plicata*	14	14	14	15	good	good	no		remove
50962	E	western red cedar	*Thuja plicata*	12	11,5	11	12	fair	fair	no	codominant at ground level, decay at base of trunk	remove
50963	E	western red cedar	*Thuja plicata*	10	15	15	12	good	fair	no	multiple leaders at 6"	remove
50964	E	western red cedar	*Thuja plicata*	10	11	11	11	good	good	no		remove
50970	E	western red cedar	*Thuja plicata*	12	16	16	12	good	good	no		remove
50971	E	western red cedar	*Thuja plicata*	10	12	12	13	good	good	no		remove
50973	E	Douglas-fir	*Pseudotsuga menziesii*	24	27	27	24	poor	poor	no	branch dieback and crown thinning	remove
50974	E	Douglas-fir	*Pseudotsuga menziesii*	40	38	38	17	fair	fair	yes	scattered branch dieback	remove
50975	D	English hawthorn	*Crataegus monogyna*	10	12	12	16	fair	fair	no	codominant at 1'	remove
50976	E	Douglas-fir	*Pseudotsuga menziesii*	40	43	43	31	good	fair	yes	moderately one sided, edge of grove	retain
50977	E	Douglas-fir	*Pseudotsuga menziesii*	22	25	25	16	fair	fair	yes	moderately one sided, moderately thin crown, edge of grove	remove
50978	E	Douglas-fir	*Pseudotsuga menziesii*	38	39	39	24	very poor	very poor	no	Phaeolus conk at base of trunk	remove
51106	E	Douglas-fir	*Pseudotsuga menziesii*	30	31	31	25	very poor	very poor	no	Phaeolus conk at base of trunk	remove

Tree No.	Svy. Type	Common Name	Scientific Name	Svy. DBH	DBH[1]	Single DBH[2]	C-Rad[3]	Condition[4]	Structure	Sig.?[5]	Comments	Treatment
51107	E	Douglas-fir	*Pseudotsuga menziesii*	18	18	18	16	fair	fair	no	thin crown, branch dieback	remove
51108	E	Douglas-fir	*Pseudotsuga menziesii*	18	16	16	13	poor	poor	no	thin crown, branch dieback, top failed	remove
51122	D	English hawthorn	*Crataegus monogyna*	12	11	11	16	fair	fair	no	multiple leaders	remove
51123	D	Douglas-fir	*Pseudotsuga menziesii*	24	22	22	22	fair	fair	no	moderately thin crown	remove
51124	D	Douglas-fir	*Pseudotsuga menziesii*	28	28	28	19	fair	fair	no	one sided, scattered branch dieback	remove
51132	D	black hawthorn	*Crataegus douglasii*	10	12	12	13	poor	poor	no	branch dieback, multiple leaders	remove
51198	D	wild plum	*Prunus americana*	14	17	17	16	fair	fair	no	multiple leaders	remove
51201	D	scouler's willow	*Salix scouleriana*	14	17	17	15	poor	poor	no	codominant, trunk decay	remove
51202	E	Douglas-fir	*Pseudotsuga menziesii*	14	15	15	17	fair	fair	no	thin crown, one sided	remove
51203	D	n/a	n/a	6	n/a	n/a	n/a	n/a	n/a	n/a	same as 51239	n/a
51204	D	black locust	*Robinia pseudoacacia*	12	14	14	14	fair	fair	no	one sided	remove
51204.1		black locust	*Robinia pseudoacacia*		14	14	7	fair	fair	no	high crown, added to site map in approximate location by arborist	remove
51204.2		black locust	*Robinia pseudoacacia*		14	14	20	fair	poor	no	one sided, significant lean, added to site map in approximate location by arborist	remove
51204.3		black locust	*Robinia pseudoacacia*		14	14	15	fair	fair	no	one sided, added to site map in approximate location by arborist	remove
51221	D	black locust	*Robinia pseudoacacia*	18	19	19	19	fair	fair	no	one sided	remove
51222	D	black locust	*Robinia pseudoacacia*	12	14	14	14	fair	fair	no	high crown	remove
51223	D	wild plum	*Prunus americana*	6	6	6	9	fair	fair	no	overtopped by adjacent trees	remove
51224	D	black locust	*Robinia pseudoacacia*	10	14	14	24	fair	fair	no	one sided	remove
51225	D	black locust	*Robinia pseudoacacia*	16	15	15	23	fair	fair	no	multiple leaders	remove
51226	D	black locust	*Robinia pseudoacacia*	10	9	9	8	fair	fair	no	one sided	remove
51227	D	black locust	*Robinia pseudoacacia*	8	6	6	12	fair	fair	no	one sided, overtopped by adjacent trees	remove
51228	D	black locust	*Robinia pseudoacacia*	14	15	15	16	fair	fair	no	multiple leaders	remove
51229	D	black locust	*Robinia pseudoacacia*	10	10	10	12	fair	fair	no	one sided	remove
51230	D	black locust	*Robinia pseudoacacia*	14	15	15	10	fair	fair	no	multiple leaders	remove
51231	D	black locust	*Robinia pseudoacacia*	10	10	10	12	fair	fair	no	one sided	remove
51232	D	black locust	*Robinia pseudoacacia*	10	12	12	8	fair	fair	no	high crown	remove
51233	D	black locust	*Robinia pseudoacacia*	8	23	23	23	fair	fair	no	multiple leaders at 1', one sided	remove
51234	D	n/a	n/a	12	n/a	n/a	n/a	n/a	n/a	n/a	same as 51233	n/a
51235	D	black locust	*Robinia pseudoacacia*	6	7	7	8	fair	fair	no	overtopped by adjacent trees	remove
51236	D	black locust	*Robinia pseudoacacia*	12	13	13	15	fair	fair	no	one sided	remove
51237	D	black locust	*Robinia pseudoacacia*	10	11	11	10	fair	fair	no	high crown	remove
51238	D	black locust	*Robinia pseudoacacia*	8	10	10	10	fair	fair	no	one sided	remove

Tree No.	Svy. Type	Common Name	Scientific Name	Svy. DBH	DBH[1]	Single DBH[2]	C-Rad[3]	Condition[4]	Structure	Sig.?[5]	Comments	Treatment
51239	D	black locust	*Robinia pseudoacacia*	6	6	6	12	fair	fair	no	one sided, same as 51203	remove
51240	D	black locust	*Robinia pseudoacacia*	8	9	9	6	poor	poor	no	suppressed	remove
51241	D	black locust	*Robinia pseudoacacia*	12	14	14	20	fair	fair	no	one sided	remove
51242	D	black locust	*Robinia pseudoacacia*	8	9	9	6	poor	poor	no	suppressed	remove
51243	D	black locust	*Robinia pseudoacacia*	8	10	10	10	fair	fair	no	one sided	remove
51244	D	black locust	*Robinia pseudoacacia*	8	9	9	20	fair	poor	no	overtopped by adjacent trees, one sided, significant lean	remove
51245	D	black locust	*Robinia pseudoacacia*	8	17	17	15	fair	fair	no	codominant at 2' with included bark, one sided	remove
51246	D	black locust	*Robinia pseudoacacia*	8	16	16	16	fair	fair	no	multiple leaders, one sided, overtopped by adjacent trees	remove
51247	D	black locust	*Robinia pseudoacacia*	22	23	23	20	fair	fair	no	one sided	remove
51248	D	sweet cherry	*Prunus avium*	10	9	9	12	fair	poor	no	overtopped by adjacent trees	remove
51269	D	English hawthorn	*Crataegus monogyna*	6	13	13	12	fair	fair	no	codominant at 1'	remove
51270	D	bigleaf maple	*Acer macrophyllum*	30	30	30	22	fair	fair	no	branch dieback, history of branch dieback and decay	remove
51271	E	Port-Orford-cedar	*Chamaecyparis lawsoniana*	8	10	10	10	fair	good	no	chlorotic, potential Phytopthora	remove
51272	E	western red cedar	*Thuja plicata*	12	14	14	12	good	good	no		remove
51273	E	western red cedar	*Thuja plicata*	12	18	18	12	good	fair	no	codominant at ground level	remove
51274	E	western red cedar	*Thuja plicata*	12	14	14	10	good	fair	no	codominant at 5' with included bark	remove
51275	E	orchard apple	*Malus domestica*	10	9	9	9	fair	fair	no	not maintained	remove
51276	E	orchard apple	*Malus domestica*	8	8	8	9	poor	poor	no	not maintained, large pruning cuts	remove
51378	E	Douglas-fir	*Pseudotsuga menziesii*	44	41	41	21	good	fair	yes	moderately one sided	remove
51379	D	English hawthorn	*Crataegus monogyna*	8	9	9	8	fair	fair	no	one sided, multiple leaders	remove
51380	D	bigleaf maple	*Acer macrophyllum*	16	16	16	22	fair	fair	no	multiple leaders, swelling at base of trunk indicative of decay	remove
51381	D	Douglas-fir	*Pseudotsuga menziesii*	34	35	35	25	fair	poor	no	significant Phellinus pini conks along trunk	remove
51382	D	Douglas-fir	*Pseudotsuga menziesii*	24	23	23	20	fair	poor	no	overtopped by adjacent trees	remove
51383	D	black hawthorn	*Crataegus douglasii*	32	34	34	21	good	fair	yes	moderately one sided	retain
51392	E	Douglas-fir	*Pseudotsuga menziesii*	22	21	21	12	fair	fair	no	suppressed crown extension, significant wound at 20'	retain
51393	E	Douglas-fir	*Pseudotsuga menziesii*	10	10	10	10	poor	poor	no	suppressed, Phellinus pini conks on trunk, lost top	retain
51394	E	Douglas-fir	*Pseudotsuga menziesii*	12	12	12	11	fair	fair	no	overtopped by adjacent trees	retain
51395	E	Douglas-fir	*Pseudotsuga menziesii*	28	31	31	20	good	fair	yes	one sided	retain

Tree No.	Svy. Type	Common Name	Scientific Name	Svy. DBH	DBH[1]	Single DBH[2]	C-Rad[3]	Condition[4]	Structure	Sig.?[5]	Comments	Treatment
51395.1		Douglas-fir	*Pseudotsuga menziesii*		26	26	20	good	fair	yes	one sided, added to site map in approximate location by arborist	remove
51396	E	Douglas-fir	*Pseudotsuga menziesii*	16	19	19	12	fair	fair	no	one sided	retain
51417	D	bigleaf maple	*Acer macrophyllum*	22	22	22	20	good	fair	no	crown raised, size estimated, not tagged because on property line	remove
51418	E	Douglas-fir	*Pseudotsuga menziesii*	22	26	26	18	fair	fair	yes	history of lower branch failure	retain
51418.1		Douglas-fir	*Pseudotsuga menziesii*		30	30	20	good	fair	yes	moderately one sided, added to site map in approximate location by arborist, size estimated, not tagged because offsite	retain
51419	E	Douglas-fir	*Pseudotsuga menziesii*	12	12	12	14	good	fair	no	one sided	retain
51420	E	Douglas-fir	*Pseudotsuga menziesii*	26	26	26	20	fair	fair	yes	moderately thin crown, moderately one sided	retain
51421	E	Douglas-fir	*Pseudotsuga menziesii*	28	30	30	16	fair	fair	yes	Phellinus pini conks on trunk, 60% live crown ratio (lcr)	retain
51421.1		Douglas-fir	*Pseudotsuga menziesii*		41	41	22	fair	fair	yes	history of lower branch failure, added to site map in approximate location by arborist	retain
51443	D	Douglas-fir	*Pseudotsuga menziesii*	8	8	8	10	good	good	no		remove
51444	D	English hawthorn	*Crataegus monogyna*	8	20	20	15	fair	fair	no	multiple leaders at 3'	remove
51469	E	Douglas-fir	*Pseudotsuga menziesii*	38	45	45	28	good	good	yes		remove
51470	D	English hawthorn	*Crataegus monogyna*	12	12	12	12	fair	fair	no	multiple leaders	remove
51471	D	English hawthorn	*Crataegus monogyna*	8	9	9	10	fair	fair	no	one sided	remove
51472	E	Douglas-fir	*Pseudotsuga menziesii*	46	47	47	19	good	fair	yes	one sided	remove
51473	E	Douglas-fir	*Pseudotsuga menziesii*	18	30	30	20	good	fair	yes	one sided	remove
51481	E	Douglas-fir	*Pseudotsuga menziesii*	34	34	34	24	poor	poor	no	thinning crown, 40% lcr, size estimated and not tagged because offsite	remove
51489	E	Douglas-fir	*Pseudotsuga menziesii*	22	28	28	22	fair	fair	yes	scattered branch dieback, driveway damage from roots	remove
51526	E	Douglas-fir	*Pseudotsuga menziesii*	16	16	16	19	good	fair	no	lost top, one sided	remove
51527	E	Douglas-fir	*Pseudotsuga menziesii*	42	45	45	23	good	fair	yes	moderately one sided	remove
51528	E	Douglas-fir	*Pseudotsuga menziesii*	26	30	30	17	good	fair	yes	crown extension limited by adjacent trees	remove
51529	E	Douglas-fir	*Pseudotsuga menziesii*	24	28	28	25	fair	fair	yes	one sided, lower crown dieback	remove
51530	E	Douglas-fir	*Pseudotsuga menziesii*	24	28	28	24	good	fair	yes	one sided	remove
51531	E	Douglas-fir	*Pseudotsuga menziesii*	24	31	31	20	good	fair	yes	one sided	remove
51532	D	English hawthorn	*Crataegus monogyna*	8	9	9	13	fair	fair	no	overtopped by adjacent trees, multiple leaders	remove

Tree No.	Svy. Type	Common Name	Scientific Name	Svy. DBH	DBH[1]	Single DBH[2]	C-Rad[3]	Condition[4]	Structure	Sig.?[5]	Comments	Treatment
51533	D	English hawthorn	*Crataegus monogyna*	8	8	8	13	fair	fair	no	overtopped by adjacent trees, multiple leaders	remove
51534	E	Douglas-fir	*Pseudotsuga menziesii*	26	32	32	23	good	fair	yes	previous codominant stem failure, standing water in wound	remove
51535	E	Douglas-fir	*Pseudotsuga menziesii*	38	41	41	22	fair	fair	yes	scattered branch dieback	remove
51536	E	Douglas-fir	*Pseudotsuga menziesii*	16	16	16	14	good	fair	no	overtopped by adjacent trees	remove
51537	E	Douglas-fir	*Pseudotsuga menziesii*	40	46	46	28	good	good	yes		remove
51538	E	Douglas-fir	*Pseudotsuga menziesii*	24	26	26	16	good	fair	yes	40% lcr	retain
51539	E	Douglas-fir	*Pseudotsuga menziesii*	22	25	25	12	fair	fair	yes	suppressed crown extension	retain
51540	E	Douglas-fir	*Pseudotsuga menziesii*	22	25	25	18	good	fair	yes	one sided	retain
51541	E	Douglas-fir	*Pseudotsuga menziesii*	12	12	12	15	good	fair	no	one sided, overtopped by adjacent trees	remove
51542	E	Douglas-fir	*Pseudotsuga menziesii*	16	19	19	12	good	fair	no	one sided	remove
51543	E	Douglas-fir	*Pseudotsuga menziesii*	10	11	11	12	good	fair	no	overtopped by adjacent trees	remove
51544	E	Douglas-fir	*Pseudotsuga menziesii*	32	34	34	21	fair	fair	yes	40% lcr	retain
51545	E	Douglas-fir	*Pseudotsuga menziesii*	24	24	24	18	fair	fair	yes	one sided	retain
51546	E	Douglas-fir	*Pseudotsuga menziesii*	30	34	34	24	fair	fair	yes	one sided, scattered branch dieback	retain
51547	E	Douglas-fir	*Pseudotsuga menziesii*	12	12	12	16	good	fair	no	one sided	remove
51548	E	Douglas-fir	*Pseudotsuga menziesii*	28	31	31	18	good	good	yes		remove
51549	E	Douglas-fir	*Pseudotsuga menziesii*	36	42	42	27	fair	fair	yes	history of lower branch failure	remove
51550	E	Douglas-fir	*Pseudotsuga menziesii*	24	22	22	24	fair	fair	yes	one sided, think crown	remove
51551	E	Douglas-fir	*Pseudotsuga menziesii*	30	35	35	22	good	fair	yes	one sided	remove
51552	D	elm	*Ulmus sp.*	6	6	6	9	good	good	no		remove
51553	E	Douglas-fir	*Pseudotsuga menziesii*	30	35	35	23	fair	fair	yes	moderately one sided, history of lower branch failure	remove
51554	D	English holly	*Ilex aquifolium*	6	6	6	11	good	fair	no	one sided	remove
51555		English holly	*Ilex aquifolium*	8	9	9	15	good	fair	no	codominant	remove
51556	D	English holly	*Ilex aquifolium*	6	10	10	15	good	fair	no	multiple leaders at 6"	remove
51557	D	English holly	*Ilex aquifolium*	6	8	8	12	good	fair	no	one sided	remove
51559	E	Douglas-fir	*Pseudotsuga menziesii*	1	18	18	18	poor	poor	no	extensive Phellinus pini along lower trunk	remove
51560	D	bigleaf maple	*Acer macrophyllum*	8	8	8	0	very poor	very poor	no	dead	remove
51561	E	Douglas-fir	*Pseudotsuga menziesii*	12	14	14	13	good	fair	no	one sided, marginal trunk taper	remove
51562	E	Douglas-fir	*Pseudotsuga menziesii*	20	21	21	13	fair	fair	yes	50% lcr	remove
51563	D	Norway maple	*Acer platanoides*	8	8	8	27	good	good	no		remove
51564	E	Douglas-fir	*Pseudotsuga menziesii*	14	16	16	13	good	fair	no	marginal trunk taper, 50% lcr	remove
51565	E	Douglas-fir	*Pseudotsuga menziesii*	24	32	32	17	fair	fair	yes	one sided, 40% lcr	remove

Tree No.	Svy. Type	Common Name	Scientific Name	Svy. DBH	DBH[1]	Single DBH[2]	C-Rad[3]	Condition[4]	Structure	Sig.?[5]	Comments	Treatment
51618	D	English hawthorn	*Crataegus monogyna*	6	12	12	10	fair	fair	no	multiple leaders, size estimated, not tagged because on property line	remove
51715	E	Douglas-fir	*Pseudotsuga menziesii*	52	54	54	30	good	good	yes		remove
51716	E	Douglas-fir	*Pseudotsuga menziesii*	46	45	45	31	good	good	yes		remove
51717	E	Douglas-fir	*Pseudotsuga menziesii*	38	38	38	34	good	fair	yes	moderately one sided	remove
51718	E	Douglas-fir	*Pseudotsuga menziesii*	20	22	22	15	good	fair	yes	one sided	remove
51719	E	Douglas-fir	*Pseudotsuga menziesii*	12	13	13	11	fair	poor	no	overtopped by adjacent trees, lost top	remove
51720	E	Douglas-fir	*Pseudotsuga menziesii*	32	31	31	20	good	fair	yes	moderately one sided	remove
51721	E	Douglas-fir	*Pseudotsuga menziesii*	14	16	16	14	fair	poor	no	marginal trunk taper, 40% lcr	remove
51722	E	Douglas-fir	*Pseudotsuga menziesii*	22	24	24	24	good	fair	yes	one sided	remove
51723	E	Douglas-fir	*Pseudotsuga menziesii*	30	35	35	22	good	fair	yes	moderately one sided	remove
51723.1		Douglas-fir	*Pseudotsuga menziesii*		28	28	14	fair	fair	yes	one sided, codominant at 50', added to site map in approximate location by arborist	remove
51724	E	Douglas-fir	*Pseudotsuga menziesii*	26	28	28	16	fair	fair	yes	40% lcr	remove
51725	E	Douglas-fir	*Pseudotsuga menziesii*	18	22	22	18	good	fair	yes	previous top failure with new leader	remove
51726	E	Douglas-fir	*Pseudotsuga menziesii*	26	28	28	30	good	fair	yes	one sided	remove
51727	E	Douglas-fir	*Pseudotsuga menziesii*	28	30	30	24	fair	fair	yes	scattered branch dieback, 40% lcr	remove
51728	E	Douglas-fir	*Pseudotsuga menziesii*	28	30	30	25	fair	fair	yes	scattered branch dieback	remove
51729	E	Douglas-fir	*Pseudotsuga menziesii*	26	26	26	20	fair	fair	yes	one sided	remove
51730	E	Douglas-fir	*Pseudotsuga menziesii*	12	14	14	0	very poor	very poor	no	dead	remove
51731	E	Douglas-fir	*Pseudotsuga menziesii*	24	24	24	15	good	fair	yes	one sided	remove
51732	E	Douglas-fir	*Pseudotsuga menziesii*	24	28	28	16	good	fair	yes	one sided	remove
51733	E	Douglas-fir	*Pseudotsuga menziesii*	26	26	26	22	good	fair	yes	one sided	remove
51734	E	Douglas-fir	*Pseudotsuga menziesii*	6	40	40	18	good	good	yes		remove
51735	E	giant sequoia	*Sequoiadendron giganteum*	10	12	12	7	good	good	no		remove
51736	E	giant sequoia	*Sequoiadendron giganteum*	12	15	15	8	good	good	no		remove
51746	E	Deodar cedar	*Cedrus deodara*	10	8	8	11	good	poor	no	lost top	remove
51761	E	Douglas-fir	*Pseudotsuga menziesii*	22	21	21	19	good	fair	yes	moderately one sided	remove
51762	E	Douglas-fir	*Pseudotsuga menziesii*	20	20	20	22	good	fair	yes	one sided	remove
51876	E	Deodar cedar	*Cedrus deodara*	16	17	17	13	good	fair	no	previously lost top with newly grown top	retain
51877	E	western red cedar	*Thuja plicata*	6	8,6,5,5	12	9	good	fair	no	multiple leaders	retain

Tree No.	Svy. Type	Common Name	Scientific Name	Svy. DBH	DBH[1]	Single DBH[2]	C-Rad[3]	Condition[4]	Structure	Sig.?[5]	Comments	Treatment
51878	E	Deodar cedar	*Cedrus deodara*	12	20	20	15	good	fair	no	codominant at 1' with included bark	retain
51879	E	western red cedar	*Thuja plicata*	6	14,4,3	14	9	good	fair	no	multiple leaders at ground level	retain
51897	D	scouler's willow	*Salix scouleriana*	8	19	19	17	fair	fair	no	codominant at 2' with included bark, multiple leaders	remove
51897.1		madrone	*Arbutus menziesii*		9	9	7	good	fair	no	one sided, added to site map in approximate location by arborist	remove
51898	D	scouler's willow	*Salix scouleriana*	8	15	15	19	fair	fair	no	codominant at 1' with included bark, multiple leaders	remove
51899	D	scouler's willow	*Salix scouleriana*	6	14	14	18	fair	fair	no	codominant at 1' with included bark, multiple leaders	remove
51899.1		madrone	*Arbutus menziesii*		6	6	12	good	fair	no	one sided, added to site map in approximate location by arborist	remove
51936	E	Douglas-fir	*Pseudotsuga menziesii*	44	44	44	25	good	good	yes		remove
51937	E	Douglas-fir	*Pseudotsuga menziesii*	44	43	43	25	good	good	yes		remove
51938	E	scouler's willow	*Salix scouleriana*	14	16,5,5,5	18	14	very poor	very poor	no	top failed, extensive decay	remove
51939	E	purpleleaf plum	*Prunus cerasifera*	12	11	11	13	fair	fair	no	multiple leaders	remove
51970	D	wild plum	*Prunus americana*	8	9	9	10	poor	poor	no	suppressed	remove
52004	E	Douglas-fir	*Pseudotsuga menziesii*	32	39	39	21	good	fair	yes	moderately one sided	remove
52005	D	wild plum	*Prunus americana*	12	12	12	14	poor	poor	no	one sided, significant epicormic growth	remove
52006	D	scouler's willow	*Salix scouleriana*	18	21	21	17	poor	poor	no	extensive decay at lower trunk	remove
52007	E	Douglas-fir	*Pseudotsuga menziesii*	10	10	10	14	good	fair	no	overtopped by adjacent trees	remove
52008	E	Oregon white oak	*Quercus garryana*	10	10	10	11	poor	poor	no	suppressed	remove
52009	E	Douglas-fir	*Pseudotsuga menziesii*	24	26	26	17	good	fair	yes	one sided	remove
52010	E	Douglas-fir	*Pseudotsuga menziesii*	44	49	49	25	fair	fair	yes	scattered branch dieback	remove
52039	E	ponderosa pine	*Pinus ponderosa*	8	7	7	8	good	good	no		remove
52317	D	pin oak	*Quercus palustris*	2	2	2	2	good	fair	no	street tree	remove
52318	D	pin oak	*Quercus palustris*	2	2	2	2	good	fair	no	street tree	remove
52391	D	pin oak	*Quercus palustris*	2	2	2	2	good	fair	no	street tree	remove

Tree No.	Svy. Type	Common Name	Scientific Name	Svy. DBH	DBH[1]	Single DBH[2]	C-Rad[3]	Condition[4]	Structure	Sig.?[5]	Comments	Treatment
52394	D	pin oak	*Quercus palustris*	2	2	2	2	good	fair	no	street tree	remove

[1] **DBH** is the trunk diameter in inches measured per International Society of Arboriculture (ISA) standards.

[2] **Single** DBH is the trunk diameter of a multi-stem tree converted to a single number according to the following formula: square root of the sum of squared DBH of each stem.

[3] **C-Rad** is the approximate crown radius in feet.

[4] **Condition and Structure** ratings range from very poor, poor, fair, to good.

[5] **Significant tree** is a tree is determined to be significant by the City Arborist based on its size, health, species, location, proximity to other significant trees, and other characteristics.

Note: Trees are defined by the City as having a minimum 6 inch DBH for Oregon White Oak, Pacific Madrone, and Pacific Dogwood, and 12 inch DBH for all other species.

APPROVED FOR CONSTRUCTION BY
CITY OF WEST LINN
This approval is only for general conformance with the design concept and general compliance with applicable codes and requirements and shall not be construed as relieving the Design Engineer of full responsibility for accuracy and completeness of the drawings. This plan review approval does not prevent the City from requiring further code corrections in the field.
DATE 6/22/2020 BY: [signature]

23190 BLAND CIRCLE SUBDIVISION
TAX MAP 2S1E 35AB
TAX LOT 9100
CITY OF WEST LINN, OREGON

TREE PRESERVATION DETAILS

REVISIONS

NO.	DATE	DESCRIPTION
0	02/19	PLANNING SUBMITTAL
1	08/19	PLANNING RESUBMITTAL
2	10/19	ENGINEERING 1ST SUBMITTAL
3	03/20	ENGINEERING 2ND SUBMITTAL

EMERIO Design
6445 SW FALLBROOK PLACE, SUITE 100
BEAVERTON, OREGON 97008
TEL: (503) 746-8812
FAX: (503) 639-9592
www.emeriodesign.com

REGISTERED PROFESSIONAL ENGINEER
54665
DocuSigned by:
Eric D. Evans
936474C69EA2449...
OREGON
JULY 11, 2008
ERIC DANIEL EVANS
EXPIRES: 12/31/2021

SHEET
6
OF
31

DocuSign Envelope ID: CFBE966A-192B-4378-9E32-B4C08CAC394B

LEGEND

- 8' P.U.E.
- BOUNDARY LINE
- RIGHT-OF-WAY LINE
- LOT LINE
- SETBACK LINES

SETBACKS

SETBACK LOCATION:	STANDARD (FT):
FRONT	20
SIDE	7.50
STREET SIDE	15
REAR	20

NOTE: TRACT C SHALL HAVE A PUBLIC & PRIVATE UTILITY & ACCESS EASEMENT OVER ITS ENTIRETY.

APPROVED FOR CONSTRUCTION BY
CITY OF WEST LINN
This approval is only for general conformance with the design concept and general compliance with applicable codes and requirements and shall not be construed as relieving the Design Engineer of full responsibility for accuracy and completeness of the drawings. This plan review approval does not prevent the City from requiring further corrections in the field.
DATE: 6/22/2020

23190 BLAND CIRCLE SUBDIVISION
TAX MAP 2S1E 35AB
TAX LOT 9100
CITY OF WEST LINN, OREGON

PRELIMINARY PLAT

REVISIONS

NO.	DATE	DESCRIPTION
0	02/19	PLANNING SUBMITTAL
1	08/19	PLANNING RESUBMITTAL
2	10/19	ENGINEERING 1ST SUBMITTAL
3	03/20	ENGINEERING 2ND SUBMITTAL

EMERIO Design
6445 SW FALLBROOK PLACE, SUITE 100
BEAVERTON, OREGON 97008
TEL: (503) 746-8812
FAX: (503) 639-9592
www.emeriodesign.com

REGISTERED PROFESSIONAL ENGINEER
54665
DocuSigned by: Eric D. Evans
ERIC DANIEL EVANS
EXPIRES: 12/31/2021

SHEET 7 OF 31

FILE:P:\0542-001 23190 S Bland Circle\dwg\civ\Engineering Set\0542-001_01plat, Layout: 7 PRELIMINARY PLAT, Plot Date: 5/22/2020 3:35 PM, by: Josh Ayers

DocuSign Envelope ID: CFBE966A-192B-4378-9E32-B4C08CAC394B

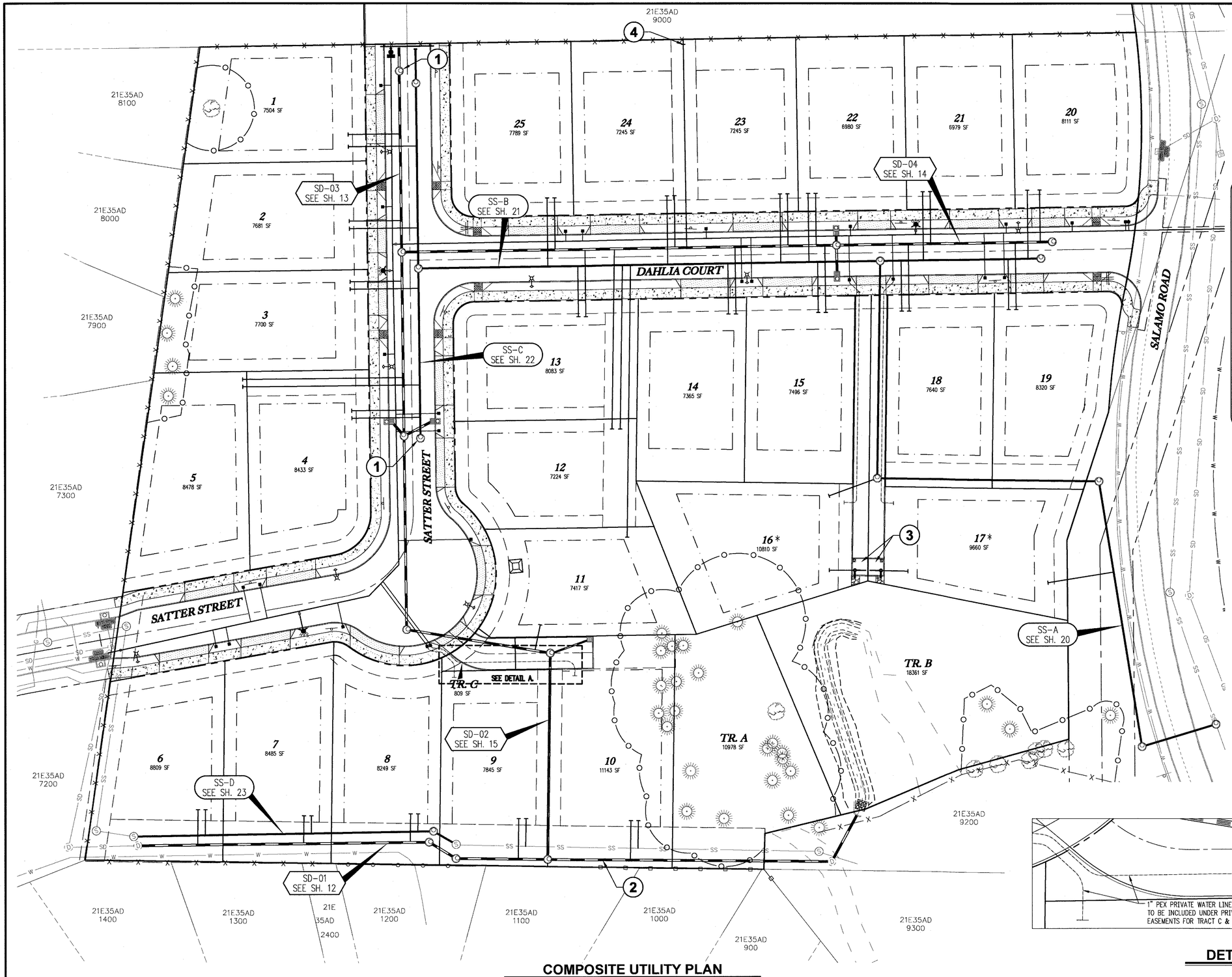

COMPOSITE UTILITY PLAN

SCALE: 1"=30'

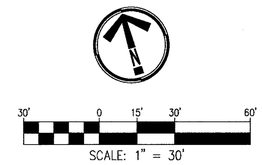

UTILITY PLAN LEGEND

- EXISTING STORM SEWER & MANHOLE
- EXISTING STORM SEWER & INLET
- EXISTING SANITARY SEWER & MANHOLE
- EXISTING WATERLINE & SERVICE
- EXISTING WATER VALVE & BOX
- EXISTING GAS LINE
- EXISTING SANITARY CLEAN OUT
- PROPOSED STORM DRAIN MANHOLE
- PROPOSED STORM INLET
- PROPOSED STORM LATERAL
- PROPOSED SANITARY SEWER & MANHOLE
- PROPOSED SANITARY LATERAL
- PROPOSED WATER LINE
- WATER SERVICE & METER
- PROPOSED FIRE HYDRANT

UTILITY CONSTRUCTION NOTES

1. INSTALL 48" MANHOLE (TYP. OF 20), SEE PROFILE SHEETS FOR DETAILS.
2. REPLACE AND LOWER EXISTING STORM LINE
3. PRIVATE DRIVE PLANTER BOXES WITH BEEHIVE OVERFLOW TO RIPRAP PAD ON LOT. SEE SH. 16 FOR DETAILS.
4. CONTRACTOR TO FIELD LOCATE EXISTING CLAY TILE STORM LINE FROM TAX LOT 9000 & CONNECT TO NEW STORM LATERAL TO CONNECT TO STORM MAINLINE IN DAHLIA CT.

* LOT TO BE EQUIPPED WITH FIRE SPRINKLERS IF REQUIRED IN LIEU OF TVFR STANDARD FIRE TURNAROUND

APPROVED FOR CONSTRUCTION BY
CITY OF WEST LINN
This approval is only for general conformance with the design concept and general compliance with applicable codes and requirements and shall not be construed as relieving the Design Engineer of full responsibility for accuracy and completeness of the drawings. This plan review approval does not prevent the City from requiring further code corrections in the field.
DATE: 10/22/2020

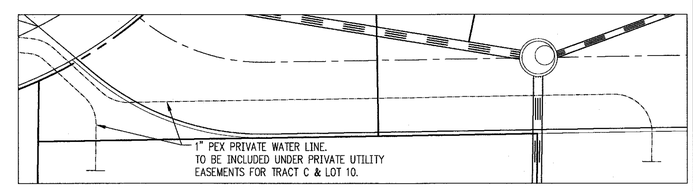

DETAIL A.

NTS

23190 BLAND CIRCLE SUBDIVISION
TAX MAP 2S1E 35AB
TAX LOT 9100
CITY OF WEST LINN, OREGON

COMPOSITE UTILITY PLAN

REVISIONS

NO.	DATE	DESCRIPTION
0	02/19	PLANNING SUBMITTAL
1	08/19	PLANNING RESUBMITTAL
2	10/19	ENGINEERING 1ST SUBMITTAL
3	03/20	ENGINEERING 2ND SUBMITTAL

EMERIO Design
6445 SW FALLBROOK PLACE, SUITE 100
BEAVERTON, OREGON 97008
TEL: (503) 746-8812
FAX: (503) 639-9592
www.emeriodesign.com

REGISTERED PROFESSIONAL ENGINEER 54665 DocuSigned by: Eric D. Evans 10/21/2020 2:04:17 PM PDT ERIC DANIEL EVANS
EXPIRES 12/31/2021

SHEET 8 OF 31

FILE:P:\0542-001 23190 S Bland Circle\dwg\civil\Engineering Set\0542-001_C8.dwg, Layout: 8 COMPOSITE UTILITY PLAN, Plot Date: 6/19/2020 9:01 AM, by: Josh Ayers

DocuSign Envelope ID: CFBE966A-192B-4378-9E32-B4C08CAC394B

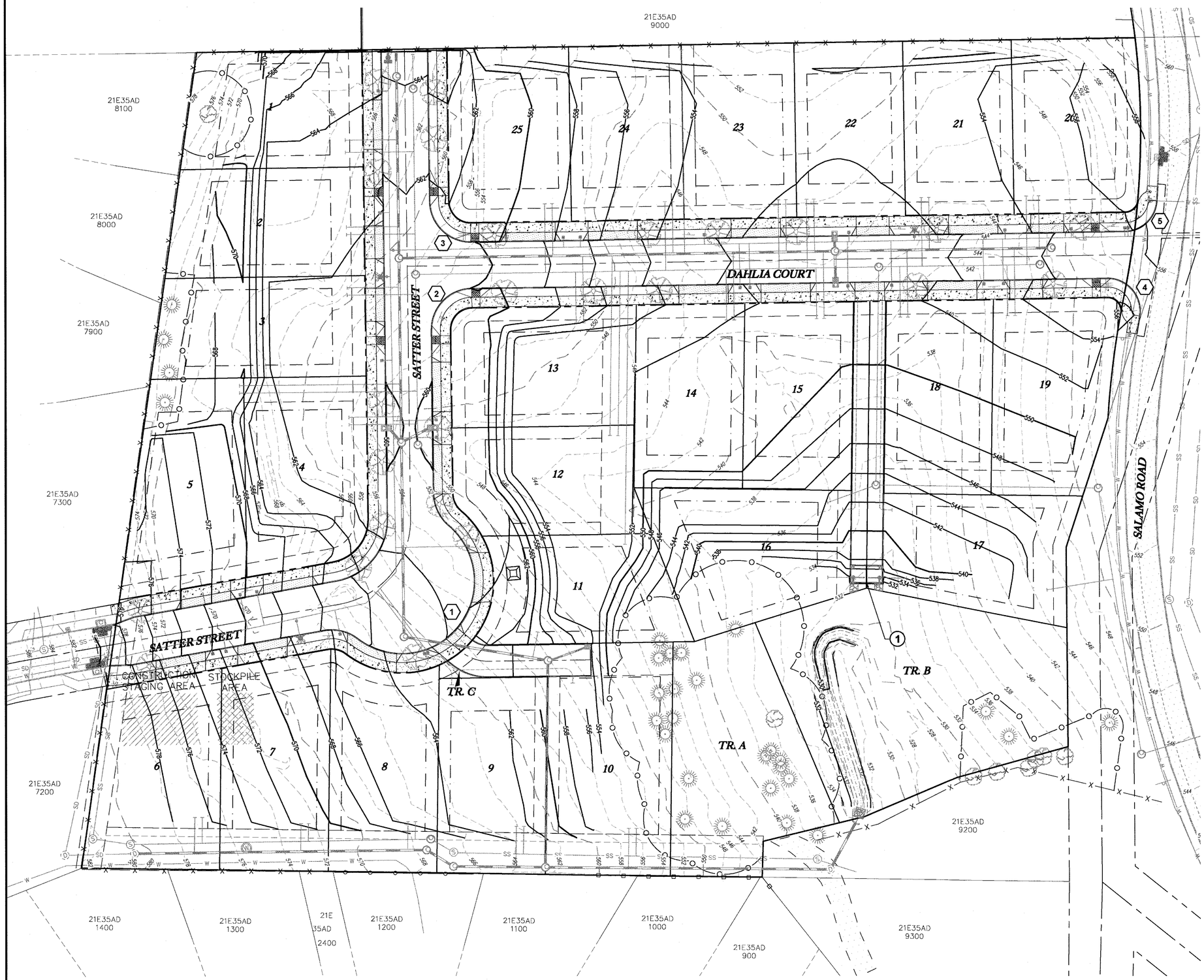

SCALE: 1" = 30'

LEGEND

220	PROPOSED MAJOR CONTOUR LINE
219	PROPOSED MINOR CONTOUR LINE
195	EXISTING MAJOR CONTOUR LINE
194	EXISTING MINOR CONTOUR LINE
	PROPERTY BOUNDARY LINE
	SIGNIFICANT RESOURCE OVERLAY ZONE (SROZ)
	PROPOSED LOT LINE
	PROPOSED RIGHT-OF-WAY LINE
	PROPOSED PUE EASEMENT
	PROPOSED SANITARY SEWER LINE
	PROPOSED STORM DRAIN LINE
	PROPOSED WATER LINE
	CONSTRUCTION TREE PROTECTION FENCE (6' HIGH CHAIN LINK WITH METAL POSTS)
	SILT FENCE
	PROPOSED SANITARY SEWER MANHOLE
	PROPOSED STORM DRAIN MANHOLE

SITE NOTES

1. CONSTRUCT CONCRETE WALLS & PLANTER BOXES AT END OF PRIVATE DRIVE. SEE SH. 16 FOR PROFILE SECTION

APPROVED FOR CONSTRUCTION BY
CITY OF WEST LINN
This approval is only for general conformance with the design concept and general compliance with applicable codes and requirements and shall not be construed as relieving the Design Engineer of full responsibility for accuracy and completeness of the drawings. This plan review approval does not prevent the City from requiring further code corrections in the field.
DATE 6/22/2020

GENERAL NOTES:

A. SEE SHEETS EC1 – EC5 FOR EROSION & SEDIMENT CONTROL PLANS. ALL EROSION CONTROL MEASURES SHALL BE IN PLACE BEFORE ANY GRADING ACTIVITIES.

B. SITE GRADING SHALL NOT RESULT IN THE IMPOUNDMENTS OF STORM WATER ON ADJACENT PROPERTIES.

(X) SEE SHEETS 17 THRU 19 FOR BROW & CURB RETURN DETAILS.

EARTHWORK SUMMARY

	VOLUME IN CY
CUT	2180
FILL	35760
NET (FILL)	33,580

NOTE: STRIPPING AND TRENCH SPOILS ARE NOT INCLUDED IN THIS CALCULATION, CONTRACTOR SHALL INDEPENDENTLY VERIFY VOLUMES.

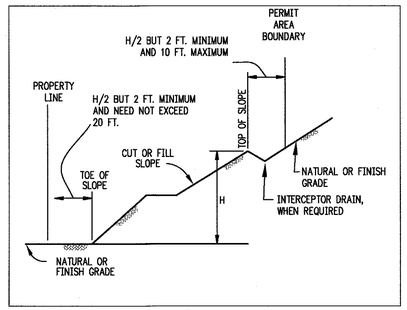

SETBACK LIMITATIONS

N.T.S.

23190 BLAND CIRCLE SUBDIVISION
TAX MAP 2S1E 35AB
TAX LOT 9100
CITY OF WEST LINN, OREGON

GRADING PLAN

REVISIONS

NO.	DATE	DESCRIPTION
0	02/19	PLANNING SUBMITTAL
1	08/19	PLANNING RESUBMITTAL
2	10/19	ENGINEERING 1ST SUBMITTAL
3	03/20	ENGINEERING 2ND SUBMITTAL

EMERIO Design
6445 SW FALLBROOK PLACE, SUITE 100
BEAVERTON, OREGON 97008
TEL: (503) 746-8812
FAX: (503) 639-9592
www.emeriodesign.com

REGISTERED PROFESSIONAL ENGINEER 54685 OREGON
DocuSigned by: Eric D. Evans 4B947C8B6334B4... 11/2/2020
ERIC DANIEL EVANS
EXPIRES: 12/31/2021

SHEET 9 OF 31

FILE:P:\0542-001 23190 S Bland Circle\dwg\civil\Engineering Set\0542-001_9grad, Layout: 9 GRADING & EROSION CONTROL PLAN, Plot Date: 6/19/2020 9:04 AM, by: Josh Ayers

DocuSign Envelope ID: CFBE966A-192B-4378-9E32-B4C08CAC394B

SCALE: 1" = 10'

GENERAL NOTES:

A. THE CONTRACTOR SHALL FIELD VERIFY THE SIZE, LOCATION & DEPTH OF EXISTING UTILITIES PRIOR TO CONSTRUCTION.

B. BACKFILL NOTE: UNLESS NOTED OTHERWISE, PIPES UNDER PAVED SURFACE REQUIRE GRANULAR BACKFILL. FOR PIPES OUTSIDE PAVEMENT, NATIVE BACKFILL IS PERMITTED.

C. SEE SHEET 11 FOR STORM WATER FACILITY DETAILS

D. SEE SHEET 11 FOR EXISTING SWALE ACCESS LOCATION.

CONSTRUCTION NOTES:

1. WIDEN EXISTING SWALE PER SECTION A-A

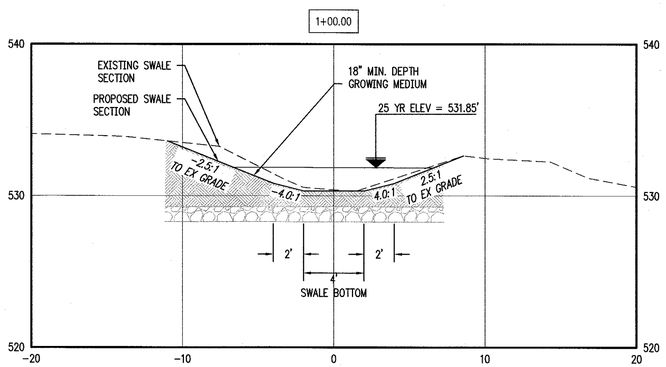

STORM WATER FACILITY - SECTION 'A-A'

N.T.S.

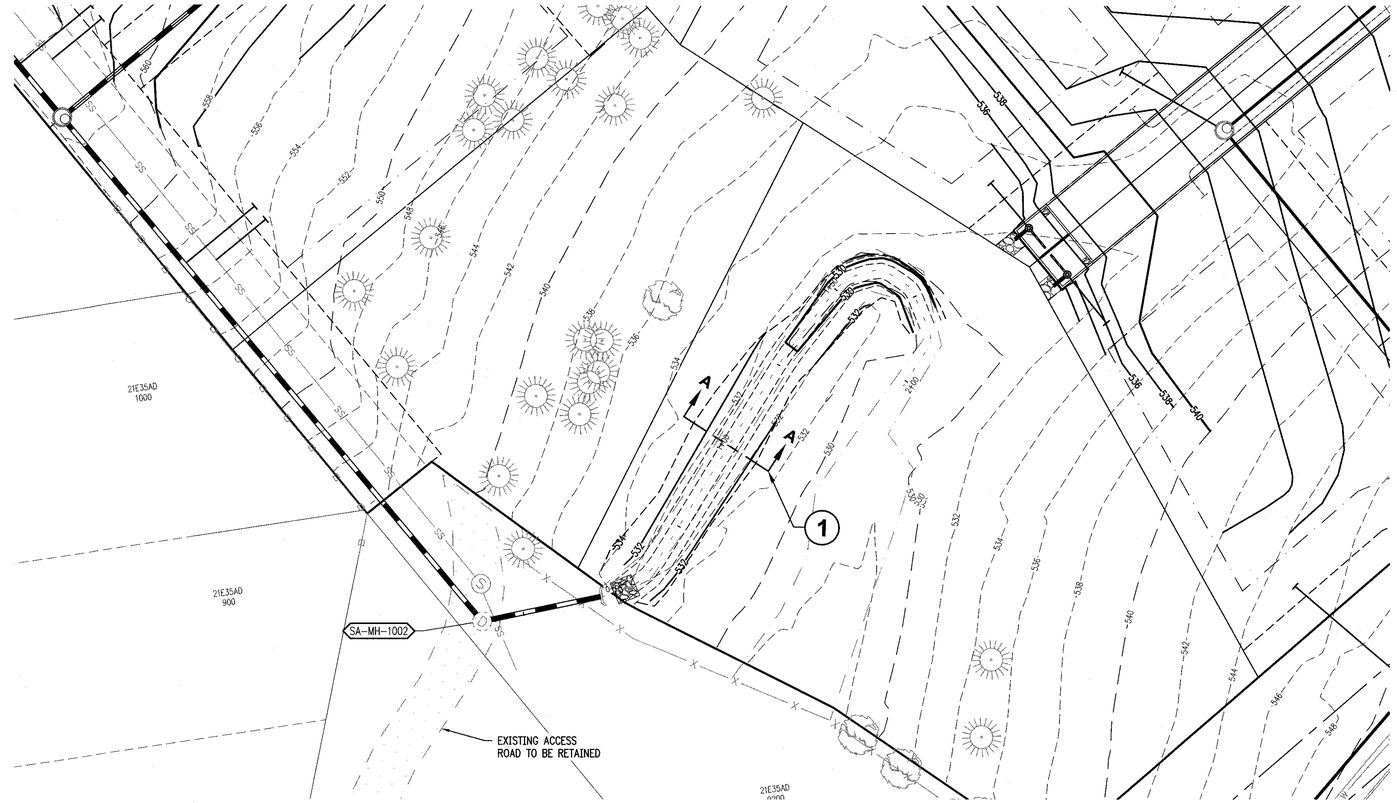

STORM WATER FACILITY - PLAN

SCALE: 1"=10'

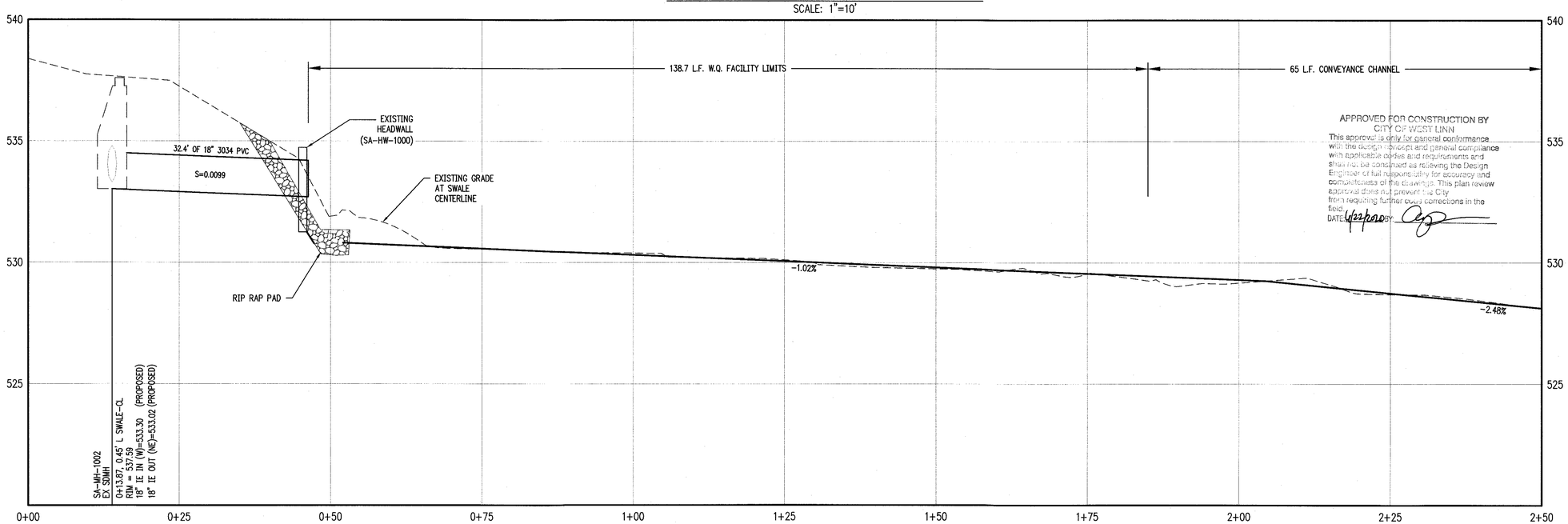

APPROVED FOR CONSTRUCTION BY CITY OF WEST LINN
This approval is only for general conformance with the design concept and general compliance with applicable codes and requirements and shall not be construed as relieving the Design Engineer of full responsibility for accuracy and completeness of the drawings. This plan review approval does not prevent the City from requiring further code corrections in the field.
DATE: 6/22/2020 BY:

STORM WATER FACILITY - PROFILE

SCALE: H:1"=10' V:1"=2.5'

23190 BLAND CIRCLE SUBDIVISION
TAX MAP 2S1E 35AB
TAX LOT 9100
CITY OF WEST LINN, OREGON

STORM WATER FACILITY PLAN & PROFILE

REVISIONS

NO.	DATE	DESCRIPTION
0	02/19	PLANNING SUBMITTAL
1	08/19	PLANNING RESUBMITTAL
2	10/19	ENGINEERING 1ST SUBMITTAL
3	03/20	ENGINEERING 2ND SUBMITTAL

EMERIO Design
6445 SW FALLBROOK PLACE, SUITE 100
BEAVERTON, OREGON 97008
TEL: (503) 746-8812
FAX: (503) 639-9592
www.emeriodesign.com

REGISTERED PROFESSIONAL ENGINEER 54665 DocuSigned by: Eric D. Evans ERIC DANIEL EVANS EXPIRES: 12/31/2021

SHEET 10 OF 31

FILE:P:\0542-001 23190 S Bland Circle\dwg\civil\Engineering Set\0542-001_10wq01, Layout: 10 STORM WATER FACILITY & SD-01 PLAN & PROFILE, Plot Date: 5/22/2020 3:35 PM, by: Josh Ayers

DocuSign Envelope ID: CFBE966A-192B-4378-9E32-B4C08CAC394B

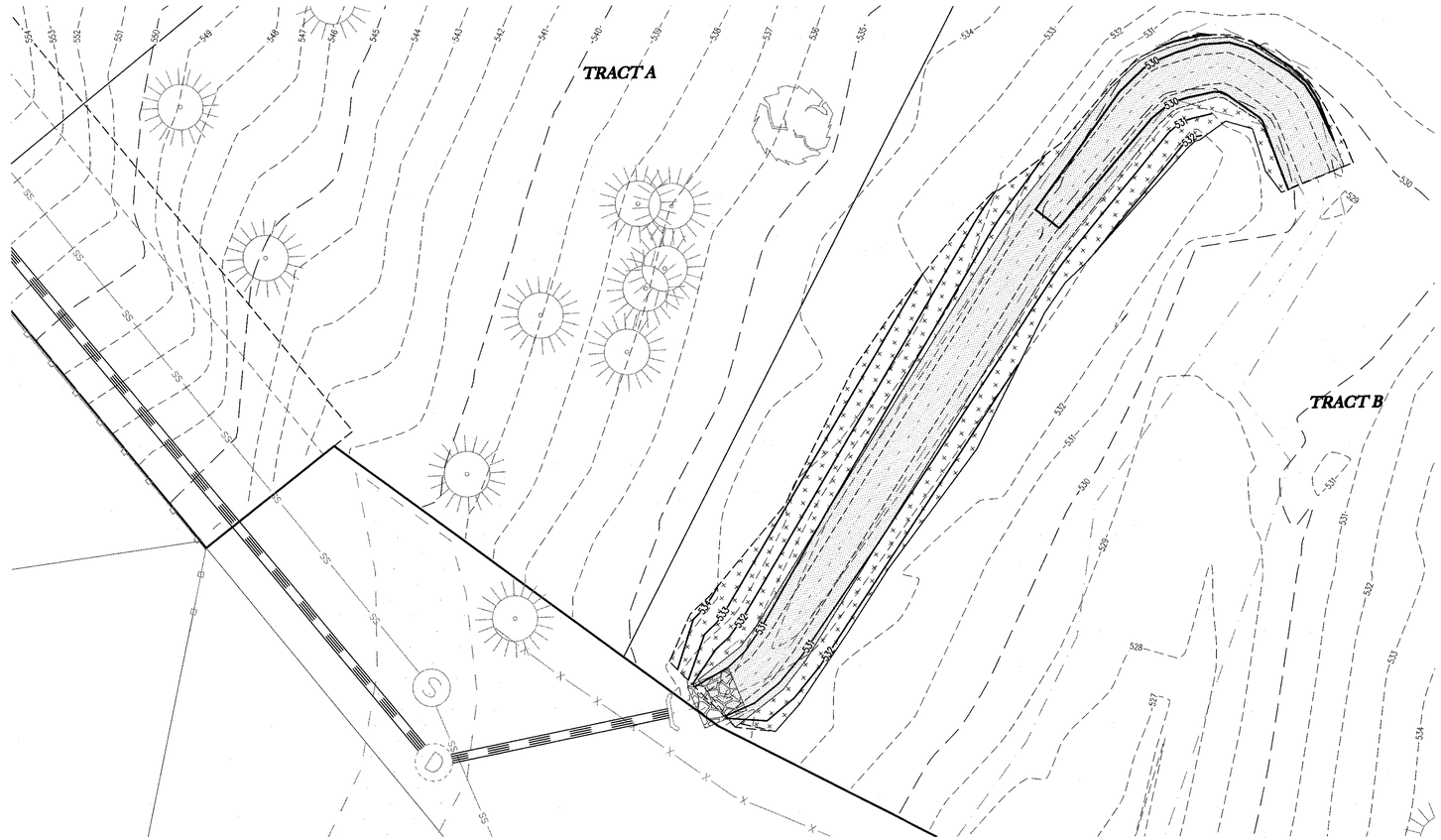

APPROVED FOR CONSTRUCTION BY
CITY OF WEST LINN
This approval is only for general conformance with the design concept and general compliance with applicable codes and requirements and shall not be construed as relieving the Design Engineer of full responsibility for accuracy and completeness of the drawings. This plan review approval does not prevent the City from requiring further code corrections in the field.
DATE: 6/22/2020 BY:

STORM WATER FACILITY PLANTING - PLAN

SCALE: 1"=10'

WATER QUALITY PLANTING REQUIREMENTS

STORMWATER QUALITY SWALE

TOTAL AREA = 1,048 SF
PLANTS REQUIRED: 115 HERBACEOUS PER 100 SF = 1206 HERBACEOUS

SIDE SLOPES

TOTAL AREA = 925 SF
TREES REQUIRED: (EV. OR DECID.): 1 TREE PER 300 SF = 4 (EV. OR DECID.)
SHRUBS REQUIRED:
LARGE SHRUBS: 4 PER 100 SF = 37 LARGE SHRUBS
MEDIUM TO SMALL SHRUBS: 6 PER 100 SF = 56 MED. TO SM. SHRUBS
GROUNDCOVER: 70 PER 100 SF = 648 GROUNDCOVER

PLANTING SCHEDULE

SYMBOL	COMMMON NAME	SCIENTIFIC NAME	PLANT TYPE	SIZE	SPACING	E/D	COMMENTS	QUANTITY
	STORMWATER QUALITY SWALE (1048 SF)							
	SPREADING RUSH	*JUNCUS PATENS*	HERBACEOUS	4" POT	12" O.C.	E	PLANT IN SAME SPECIES GROUPS OF 5-7 PLANTS	603
	AMERICAN BULRUSH	SCHOENOPLECTUS AMERICANUS	HERBACEOUS	4" POT	12" O.C.	E		603
	NATIVE BIO-FILTER MIX	HYDROSEED PROTIME 440	SEED	1 LB/1000 SF				
							HERB SUBTOTAL	1,206
							SWALE AREA TOTAL	1,206
	SIDE SLOPE AREA (925 SF)							
	VINE MAPLE	ACER CIRCINATUM	TREE	#2/5' HT.	SINGLE	D		2
	OREGON ASH	FRAXINUS LATIFOLIA	TREE	#2/5' HT.	SINGLE	D		2
	RED-TWIG DOGWOOD	CORNUS SERICEA	LARGE SHRUB	#1	36" O.C.	D	PLANT IN SAME SPECIES GROUPS OF 5-7 PLANTS	19
	NOOTKA ROSE	ROSA NUTKANA	LARGE SHRUB	#1	48" O.C.	D		18
	OREGON GRAPE	MAHONIA AQUIFOLIUM	MEDIUM/SMALL SHRUB	#1	36" O.C.	D		28
	SNOWBERRY	SYMPHORICARPOS ALBA	MEDIUM/SMALL SHRUB	#1	36" O.C.	D		28
	KINNINKINNICK	ARCTOSTAPHYLOS UVA-URSI	GROUNDCOVER	4" POT	12" O.C.	E		324
	CREEPING MAHONIA	MAHONIA REPENS	GROUNDCOVER	4" POT	12" O.C.	E		324
	NATIVE BIO-FILTER MIX	HYDROSEED PROTIME 440	SEED	1 LB/1000 SF				
							SHRUB SUBTOTAL	741
							TREE SUBTOTAL	4
							GROUNDCOVER SUBTOTAL	648
							MID-SLOPE AREA TOTAL	745
							FACILITY TOTAL	1,951

23190 BLAND CIRCLE
SUBDIVISION
TAX MAP 2S1E 35AB
TAX LOT 9100
CITY OF WEST LINN, OREGON

STORM WATER FACILITY PLANTING PLAN

REVISIONS

NO.	DATE	DESCRIPTION
0	02/19	PLANNING SUBMITTAL
1	08/19	PLANNING RESUBMITTAL
2	10/19	ENGINEERING 1ST SUBMITTAL
3	03/20	ENGINEERING 2ND SUBMITTAL

EMERIO Design
6445 SW FALLBROOK PLACE, SUITE 100
BEAVERTON, OREGON 97008
TEL: (503) 746-8812
FAX: (503) 639-9592
www.emeriodesign.com

REGISTERED PROFESSIONAL ENGINEER 54665 DocuSigned by: Eric D. Evans 936474C69E2A4A1 JULY 11, 2020 ERIC DANIEL EVANS EXPIRES: 12/31/2021

SHEET 11 OF 31

FILE:P:\0542-001 23190 S Bland Circle\dwg\civil\Engineering Set\0542-001_11wq02, Layout: 11 STORM WATER FACILITY DETAILS, Plot Date: 5/22/2020 3:35 PM, by: Josh Ayers

DocuSign Envelope ID: CFBE966A-192B-4378-9E32-B4C08CAC394B

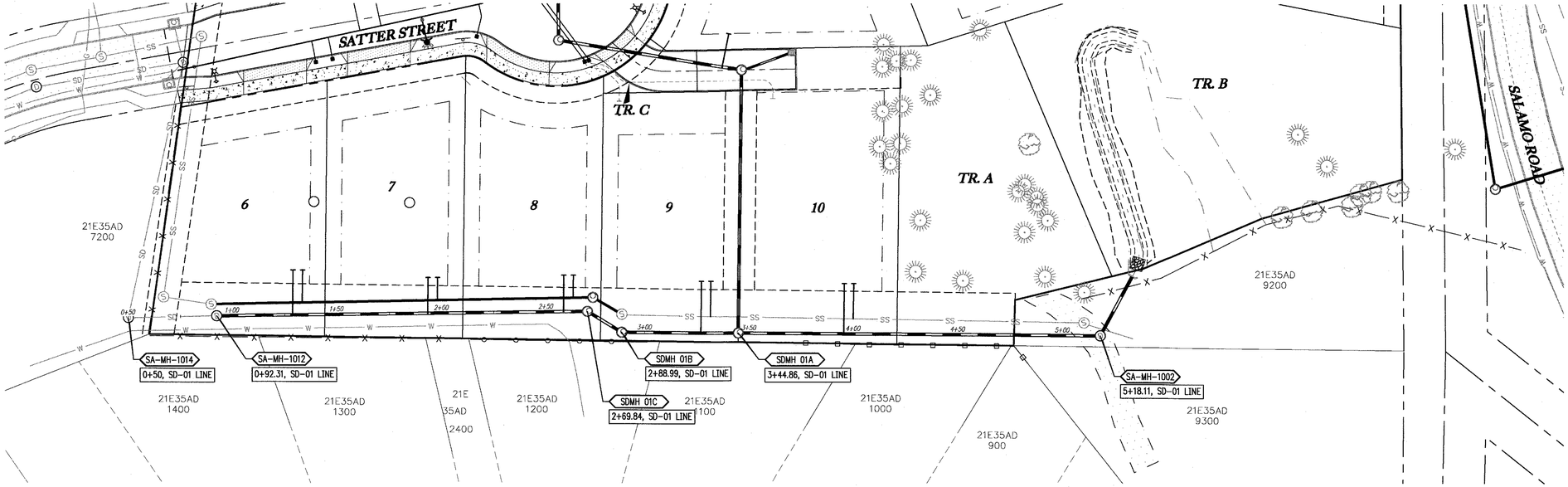

SD-01 STORMLINE PLAN

SCALE: 1"=30'

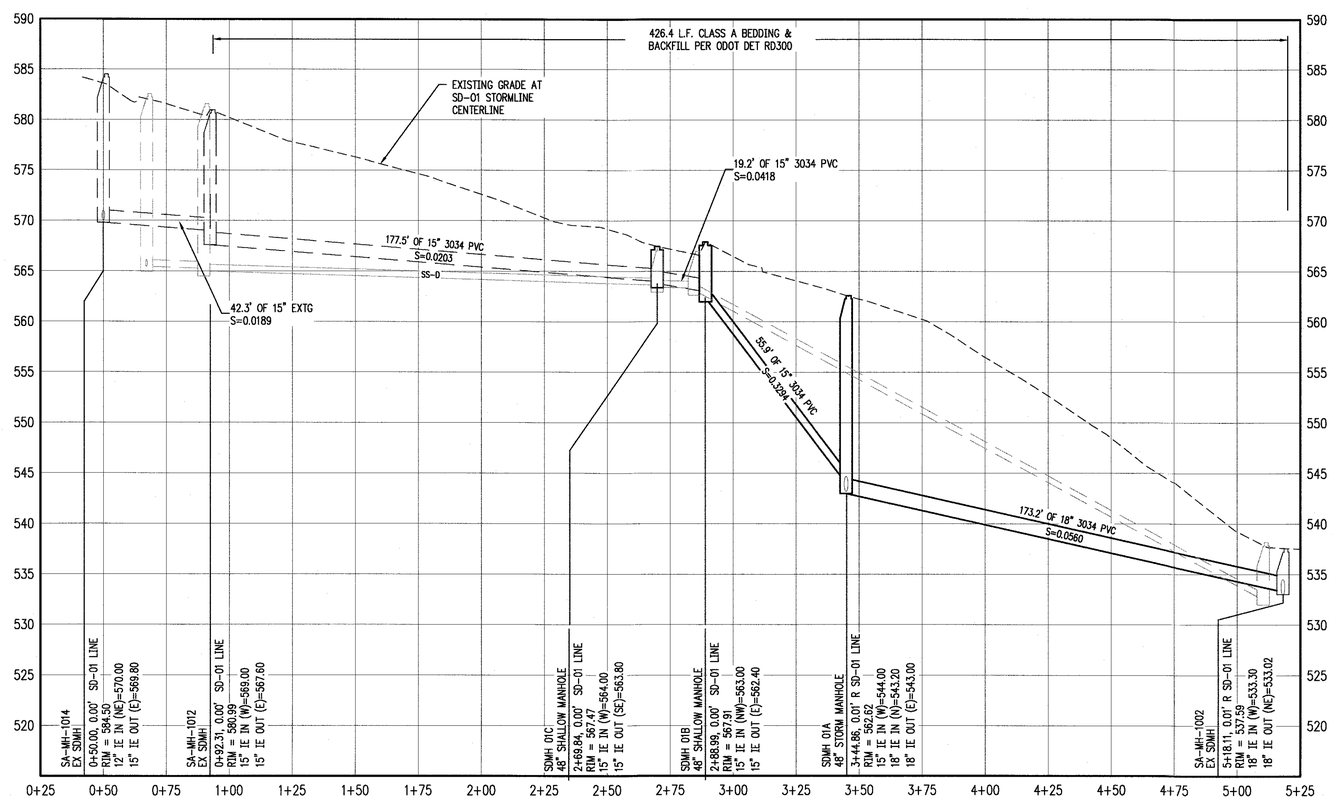

SD-01 STORMLINE PROFILE

SCALE: 1"=30' HORZ. 1"=7.5' VERT.

STORM SEWER LATERAL TABLE

LOT NUM.	STA @ M.L.	SIZE & MATERIAL	LEN	I.E. @ M.L.	ASB	I.E. @ PLUG	ASB	SL	ASB	COVER @ PLUG	ASB
LOT 6	1+29	4" 3034 PVC	21.5'	567.32		570.00		0.1249		6.5'	
LOT 7	1+93	4" 3034 PVC	17.1'	566.01		567.00		0.0581		4.7'	
LOT 8	2+58	4" 3034 PVC	12.6'	564.69		564.92		0.0176		2.0'	
LOT 9	3+27	4" 3034 PVC	24.7'	550.36		556.73		0.2578		5.3'	
LOT 10	3+95	4" 3034 PVC	24.0'	540.75		547.00		0.2599		5.8'	

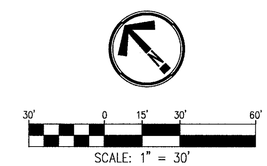

APPROVED FOR CONSTRUCTION BY
CITY OF WEST LINN
This approval is only for general conformance with the design concept and general compliance with applicable codes and requirements and shall not be construed as relieving the Design Engineer of full responsibility for accuracy and completeness of the drawings. This plan review approval does not prevent the City from requiring further code corrections in the field.
DATE 6/22/2020 BY:

23190 BLAND CIRCLE SUBDIVISION
TAX MAP 2S1E 35AB
TAX LOT 9100
CITY OF WEST LINN, OREGON

STORM LINE SD-01 PLAN & PROFILE

REVISIONS

NO.	DATE	DESCRIPTION
0	02/19	PLANNING SUBMITTAL
1	08/19	PLANNING RESUBMITTAL
2	10/19	ENGINEERING 1ST SUBMITTAL
3	03/20	ENGINEERING 2ND SUBMITTAL

EMERIO Design
6445 SW FALLBROOK PLACE, SUITE 100
BEAVERTON, OREGON 97008
TEL: (503) 746-8812
FAX: (503) 639-9592
www.emeriodesign.com

REGISTERED PROFESSIONAL ENGINEER
54665
DocuSigned by:
Eric D. Evans
5A9474C69E5A4...
6/11/2020
ERIC DANIEL EVANS
EXPIRES: 12/31/2021

SHEET 12 OF 31

FILE:P:\0542-001 23190 S Bland Circle\dwg\civil\Engineering Set\0542-001_12sd01, Layout: 17 SD-01 STORM LINE, Plot Date: 5/22/2020 3:36 PM, by: Josh Ayers

DocuSign Envelope ID: CFBE966A-192B-4378-9E32-B4C08CAC394B

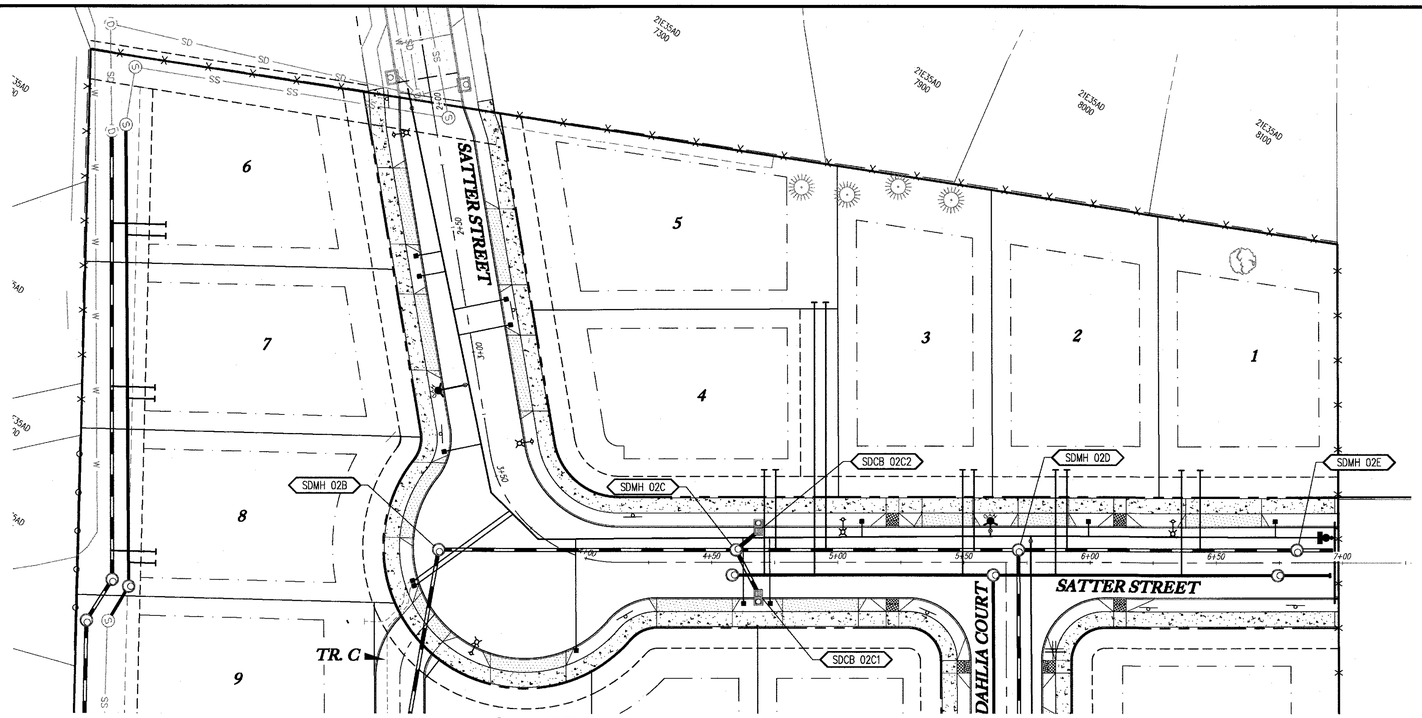

SATTER STREET PLAN

SCALE: 1"=30'

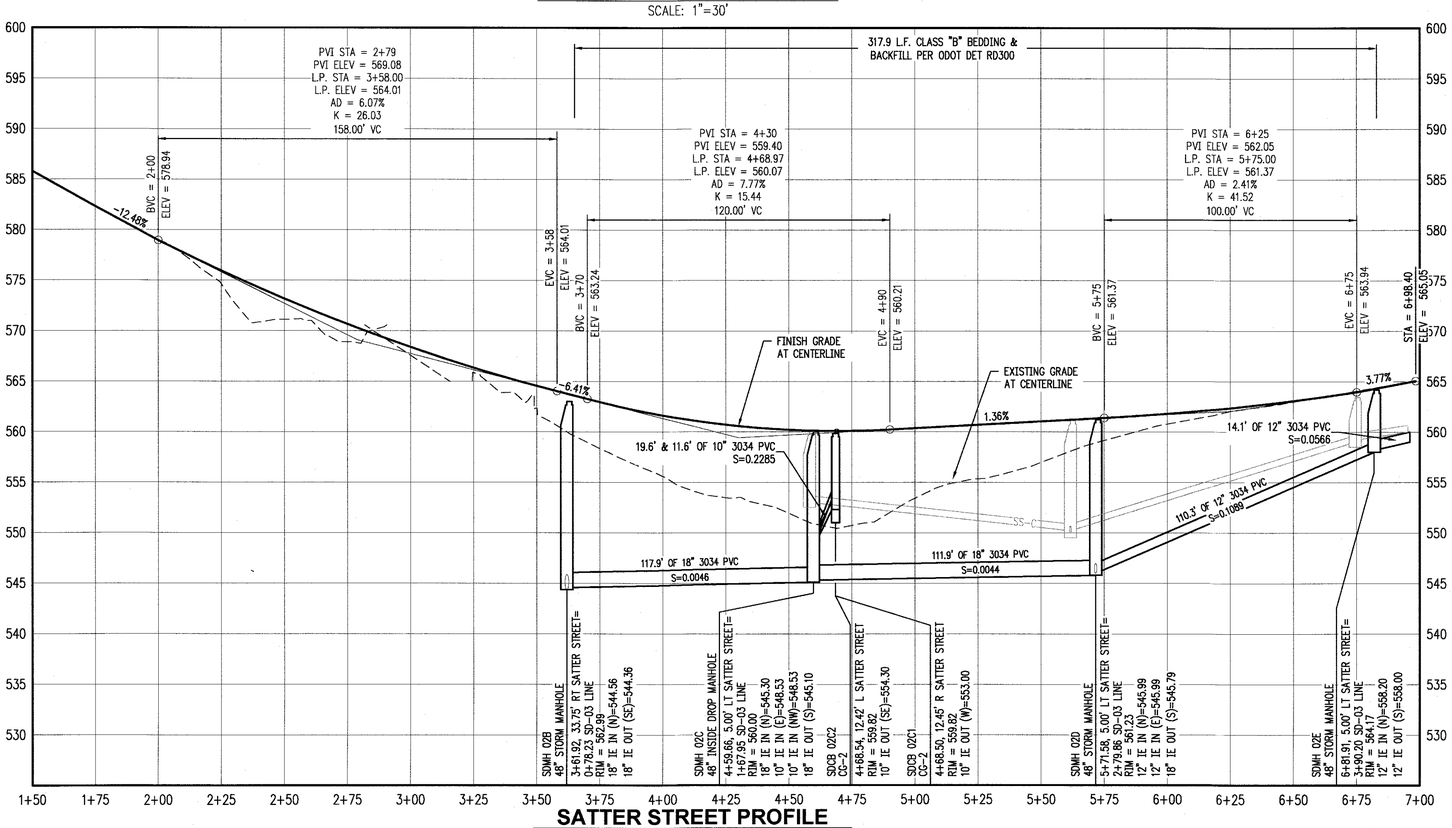

SATTER STREET PROFILE

SCALE: 1"=30' HORZ. 1"=7.5' VERT.

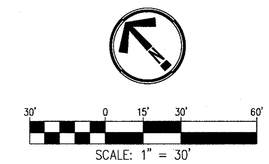

APPROVED FOR CONSTRUCTION BY
CITY OF WEST LINN
This approval is only for general conformance with the design concept and general compliance with applicable codes and requirements and shall not be construed as relieving the Design Engineer of full responsibility for accuracy and completeness of the drawings. This plan review approval does not prevent the City from requiring further code corrections in the field.
DATE: 06/26/2020 BY:

STORM SEWER LATERAL TABLE

LOT NUM.	STA @ M.L.	SIZE & MATERIAL	LEN	I.E. @ M.L.	ASB	I.E. @ PLUG	ASB	SL	ASB	COVER @ PLUG	ASB
LOT 1	3+52	4" 3034 PVC	31.7'	554.16		558.60		0.1400		4.6'	
LOT 2	2+99	4" 3034 PVC	31.7'	548.41		556.80		0.2646		5.1'	
LOT 3	2+62	4" 3034 PVC	31.7'	546.29		553.00		0.2116		8.4'	
LOT 4	1+84	4" 3034 PVC	31.7'	545.75		554.00		0.2603		6.9'	
LOT 5	2+04	4" 3034 PVC	98.0'	545.84		562.00		0.1650		6.6'	

CATCH BASIN DATA TABLE

CATCH BASIN	C.B. TYPE	STREET STA	RIM ELEV.	I.E. OUT	SLOPE	PIPE DATA
SDCB 02C1	CG-2	4+68.50 12.45' RT	559.82	553.00	0.2285	19.56 LF 10" 3034 PVC
SDCB 02C2	CG-2	4+68.54 12.42' LT	559.82	554.30	0.4986	11.57 LF 10" 3034 PVC

23190 BLAND CIRCLE
SUBDIVISION
TAX MAP 2S1E 35AB
TAX LOT 9100
CITY OF WEST LINN, OREGON

SATTER STREET & SD-03 PLAN & PROFILE

REVISIONS

NO.	DATE	DESCRIPTION
0	02/19	PLANNING SUBMITTAL
1	08/19	PLANNING RESUBMITTAL
2	10/19	ENGINEERING 1ST SUBMITTAL
3	03/20	ENGINEERING 2ND SUBMITTAL

EMERIO Design
6445 SW FALLBROOK PLACE, SUITE 100
BEAVERTON, OREGON 97008
TEL: (503) 626-8812
FAX: (503) 639-9592
www.emeriodesign.com

REGISTERED PROFESSIONAL ENGINEER 54665
DocuSigned by: Eric D. Evans
ERIC DANIEL EVANS
EXPIRES: 12/31/2021

SHEET 13 OF 31

FILE:P:\0542-001 23190 S Bland Circle\dwg\civil\Engineering Set\0542-001_13satter, Layout: 13 SATTER STREET PROFILE, Plot Date: 6/19/2020 9:04 AM, by: Josh Ayers

DocuSign Envelope ID: CFBE966A-192B-4378-9E32-B4C08CAC394B

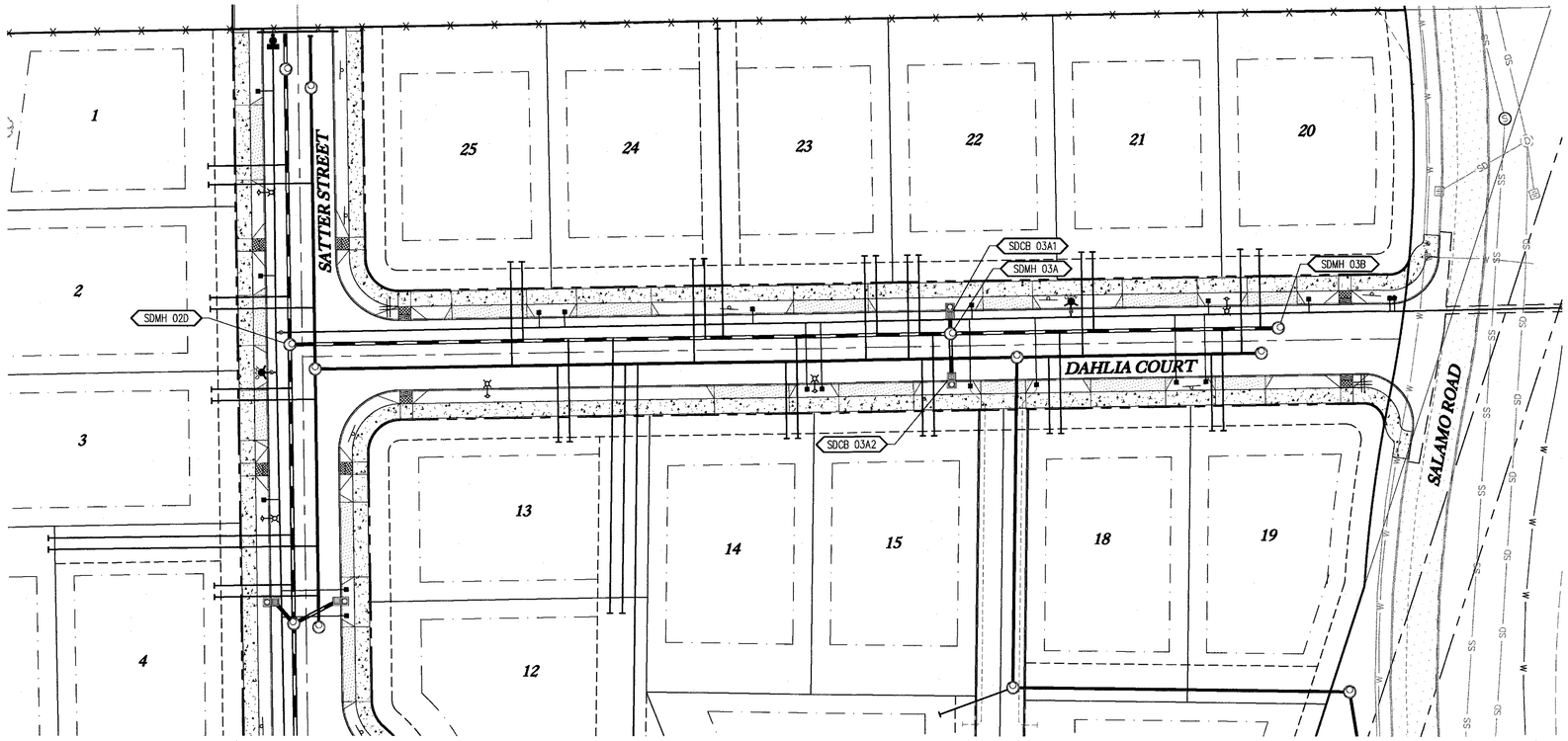

DAHLIA COURT PLAN

SCALE: 1"=30'

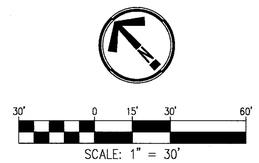

APPROVED FOR CONSTRUCTION BY
CITY OF WEST LINN
This approval is only for general conformance with the design concept and general compliance with applicable codes and requirements and shall not be construed as relieving the Design Engineer of full responsibility for accuracy and completeness of the drawings. This plan review approval does not prevent the City from requiring further code corrections in the field.
DATE: 6/22/2020

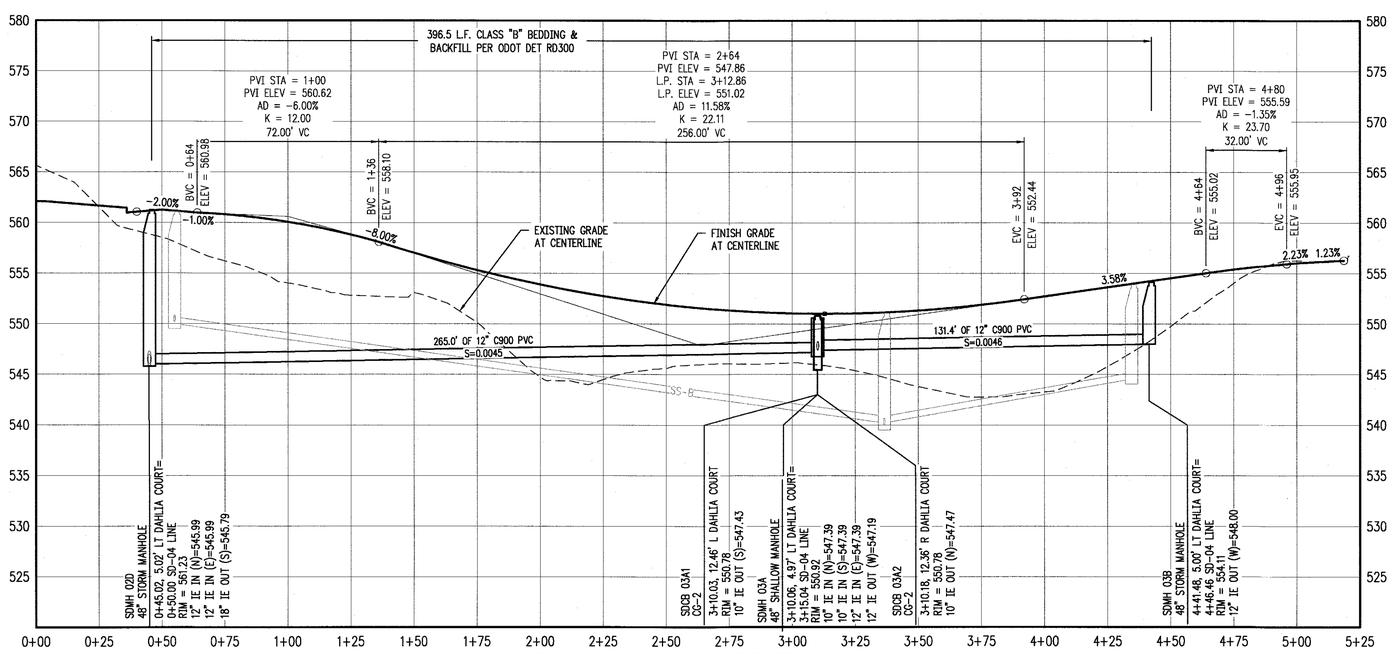

DAHLIA COURT PROFILE

SCALE: 1"=30' HORZ. 1"=7.5' VERT.

STORM SEWER LATERAL TABLE

LOT NUM.	STA @ M.L.	SIZE & MATERIAL	LEN	I.E. @ M.L.	ASB	I.E. @ PLUG	ASB	SL	ASB	COVER @ PLUG	ASB
LOT 12	1+80	4" 3034 PVC	109.7'	546.91		549.10		0.0200		2.8'	
LOT 13	1+62	4" 3034 PVC	40.8'	546.83		547.65		0.0201		7.9'	
LOT 14	2+53	4" 3034 PVC	40.8'	547.24		548.06		0.0200		3.5'	
LOT 15	3+08	4" 3034 PVC	40.8'	547.49		548.31		0.0201		2.3'	
LOT 18	3+59	4" 3034 PVC	40.8'	547.93		548.75		0.0202		2.2'	
LOT 19	4+24	4" 3034 PVC	40.8'	548.23		549.05		0.0201		3.9'	
LOT 20	4+39	4" 3034 PVC	31.7'	548.30		548.94		0.0202		5.3'	
LOT 21	3+72	4" 3034 PVC	31.7'	547.99		548.63		0.0202		3.4'	
LOT 22	3+03	4" 3034 PVC	31.7'	547.47		548.11		0.0202		3.3'	
LOT 23	2+86	4" 3034 PVC	31.7'	547.39		548.03		0.0202		3.5'	
LOT 24	2+17	4" 3034 PVC	31.7'	547.08		547.72		0.0202		5.9'	
LOT 25	1+44	4" 3034 PVC	31.7'	546.75		552.00		0.1656		6.2'	
TL 9000	2+24	6" C900 PVC	114.3'	547.03		548.20		0.0103		3.6'	

CATCH BASIN DATA TABLE

CATCH BASIN	C.B. TYPE	STREET STA	RIM ELEV.	I.E. OUT	SLOPE	PIPE DATA
SDCB 03A1	CG-2	3+10.03 12.46' LT	550.78	547.43	0.0053	7.48 LF 10" C900 PVC
SDCB 03A2	CG-2	3+10.18 12.36' RT	550.78	547.47	0.0046	17.34 LF 10" C900 PVC

23190 BLAND CIRCLE
SUBDIVISION
TAX MAP 2S1E 35AB
TAX LOT 9100
CITY OF WEST LINN, OREGON

DAHLIA COURT & SD-04 PLAN & PROFILE

REVISIONS

NO.	DATE	DESCRIPTION
0	02/19	PLANNING SUBMITTAL
1	08/19	PLANNING RESUBMITTAL
2	10/19	ENGINEERING 1ST SUBMITTAL
3	03/20	ENGINEERING 2ND SUBMITTAL

EMERIO Design
6445 SW FALLBROOK PLACE, SUITE 100
BEAVERTON, OREGON 97008
TEL: (503) 746-8812
FAX: (503) 639-9592
www.emeriodesign.com

REGISTERED PROFESSIONAL ENGINEER
54665
Docu Signed by:
Eric D Evans
23947AC69CA3449...
6/22/2020
ERIC DANIEL EVANS
EXPIRES: 12/31/2021

SHEET 14 OF 31

FILE:P:\0542-001 23190 S Bland Circle\dwg\civ\Engineering Set\0542-001_14dahlia, Layout: 11 DAHLIA COURT PROFILE, Plot Date: 6/19/2020 9:04 AM, by: Josh Ayers

DocuSign Envelope ID: CFBE966A-192B-4378-9E32-B4C08CAC394B

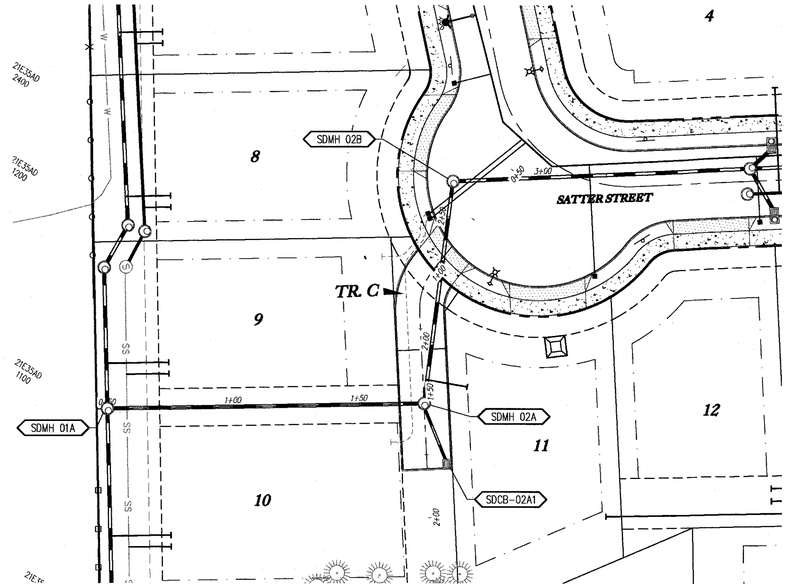

SD-02 STORMLINE PLAN

SCALE: 1"=30'

30' 0 15' 30' 60'

SCALE: 1" = 30'

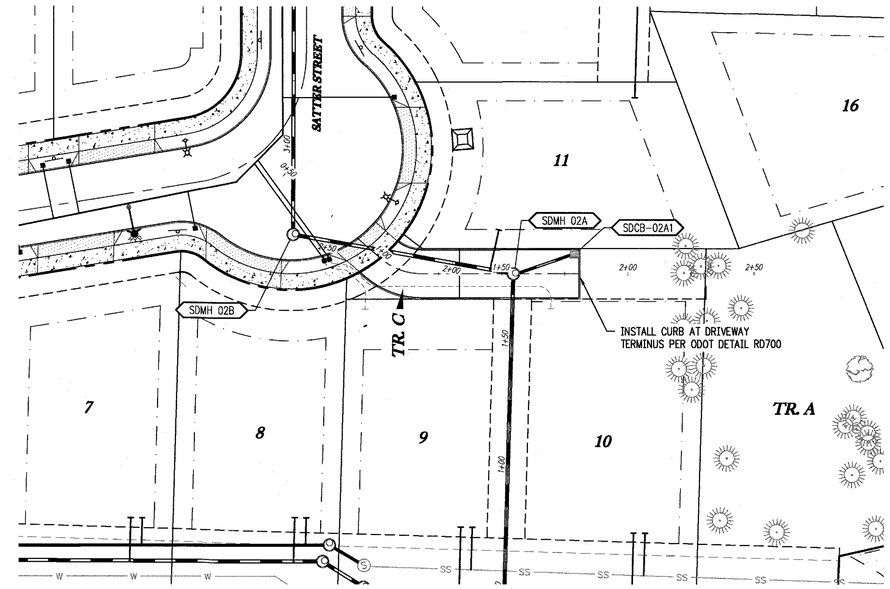

TRACT C PRIVATE DRIVE PLAN

SCALE: 1"=30'

30' 0 15' 30' 60'

SCALE: 1" = 30'

APPROVED FOR CONSTRUCTION BY
CITY OF WEST LINN
This approval is only for general conformance with the design concept and general compliance with applicable codes and requirements and shall not be construed as relieving the Design Engineer of full responsibility for accuracy and completeness of the drawings. This plan review approval does not prevent the City from requiring further code corrections in the field.
DATE 10/29/20 BY:

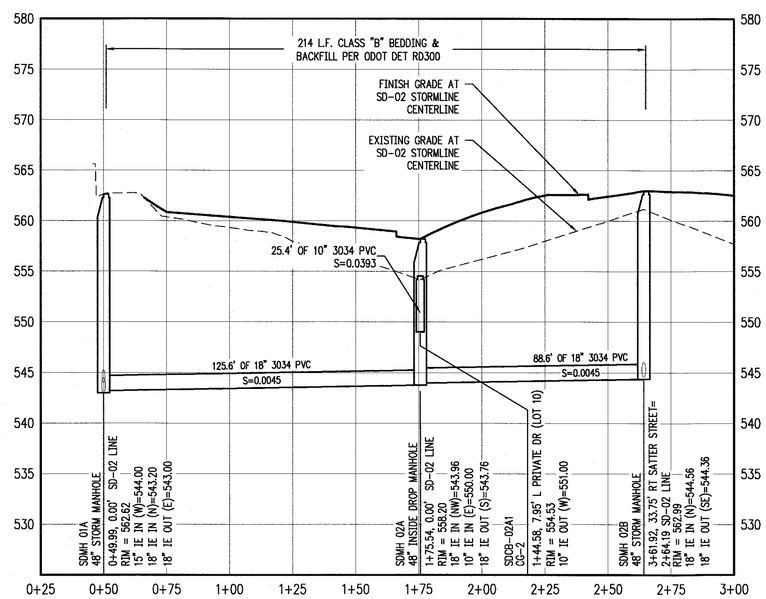

SD-02 STORMLINE PROFILE

SCALE: 1"=30' HORZ. 1"=7.5' VERT.

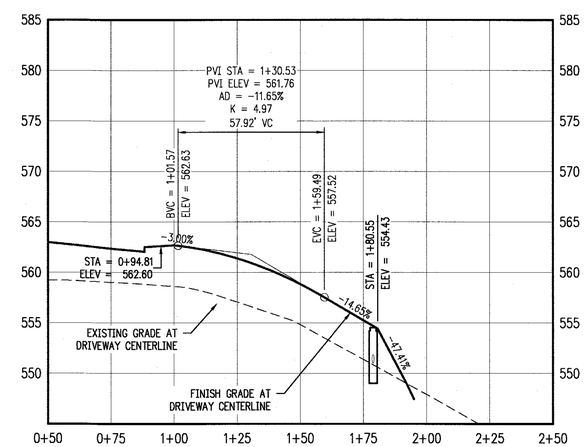

TRACT C PRIVATE DRIVE PROFILE

SCALE: 1"=30' HORZ. 1"=7.5' VERT.

STORM SEWER LATERAL TABLE

LOT NUM.	STA @ M.L.	SIZE & MATERIAL	LEN	I.E. @ M.L.	ASB	I.E. @ PLUG	ASB	SL	ASB	COVER @ PLUG	ASB
LOT 11	1+85	4" 3034 PVC	16.1'	544.59		552.50		0.4915		5.9'	

CATCH BASIN DATA TABLE

CATCH BASIN	C.B. TYPE	STREET STA	RIM ELEV.	I.E. OUT	SLOPE	PIPE DATA
SDCB-02A1	CG-2	1+44.58 7.95' LT	554.53	551.00	0.0393	25.42 LF 10" 3034 PVC

23190 BLAND CIRCLE
SUBDIVISION
TAX MAP 2S1E 35AB
TAX LOT 9100
CITY OF WEST LINN, OREGON

TRACT C PRIVATE DRIVE & SD-02 PLAN & PROFILE

REVISIONS

NO.	DATE	DESCRIPTION
0	02/19	PLANNING SUBMITTAL
1	08/19	PLANNING RESUBMITTAL
2	10/19	ENGINEERING 1ST SUBMITTAL
3	03/20	ENGINEERING 2ND SUBMITTAL

EMERIO Design
6445 SW FALLBROOK PLACE, SUITE 100
BEAVERTON, OREGON 97008
TEL: (503) 746-8812
FAX: (503) 839-9592
www.emeriodesign.com

REGISTERED PROFESSIONAL ENGINEER 54665 DocuSigned by: Eric D. Evans 93F47C09E5E4E0... OREGON JULY 11, 2014 ERIC DANIEL EVANS
EXPIRES: 12/31/2021

SHEET 15 OF 31

FILE P:\0542-001 23190 S Bland Circle\dwg\civ\Engineering Set\0542-001_15sd02, Layout: 15 SD-02 STORM LINE, Plot Date: 6/19/2020 9:04 AM, by: Josh Ayers

DocuSign Envelope ID: CFBE966A-192B-4378-9E32-B4C08CAC394B

STORMWATER FACILITY PLANTING MATRIX									
PLANTER (A) AREA: 72 SF @ 72 HERBACEOUS PLANTS PER 100 SF = 52 PLANTS REQUIRED PLANTER (B) AREA: 72 SF @ 72 HERBACEOUS PLANTS PER 100 SF = 52 PLANTS REQUIRED									
COMMON NAME	SCIENTIFIC NAME	PLANT TYPE	ZONE	SIZE	POTENTIAL HEIGHT	SPACING ON CENTER	PLANTER (A)	PLANTER (B)	TOTAL PLANTS
DENSE SEDGE	"CAREX DENSE"	HERBACEOUS	A	1 GAL.	24"	12"	31	31	62
SPREADING RUSH	"JUNCUS PATENS"	HERBACEOUS	A	1 GAL.	36"	12"	21	21	42
TOTAL ZONE A HERBACEOUS PLANTS (104 REQUIRED)									
PLANTER (A) AREA: 72 SF @ 4 SM SHRUBS PER 100 SF = 3 SM SHRUBS PLANTER (B) AREA: 72 SF @ 4 SM SHRUBS PER 100 SF = 3 SM SHRUBS							PLANTER (A)	PLANTER (B)	TOTAL PLANTS
SUB-ALPINE SPIREA	"SPIREA DENSIFLORA"	SMALL SHRUB	A/B	1 GAL.	36"	24"	3	3	6
TOTAL ZONE A SMALL SHRUBS (6 REQUIRED)									

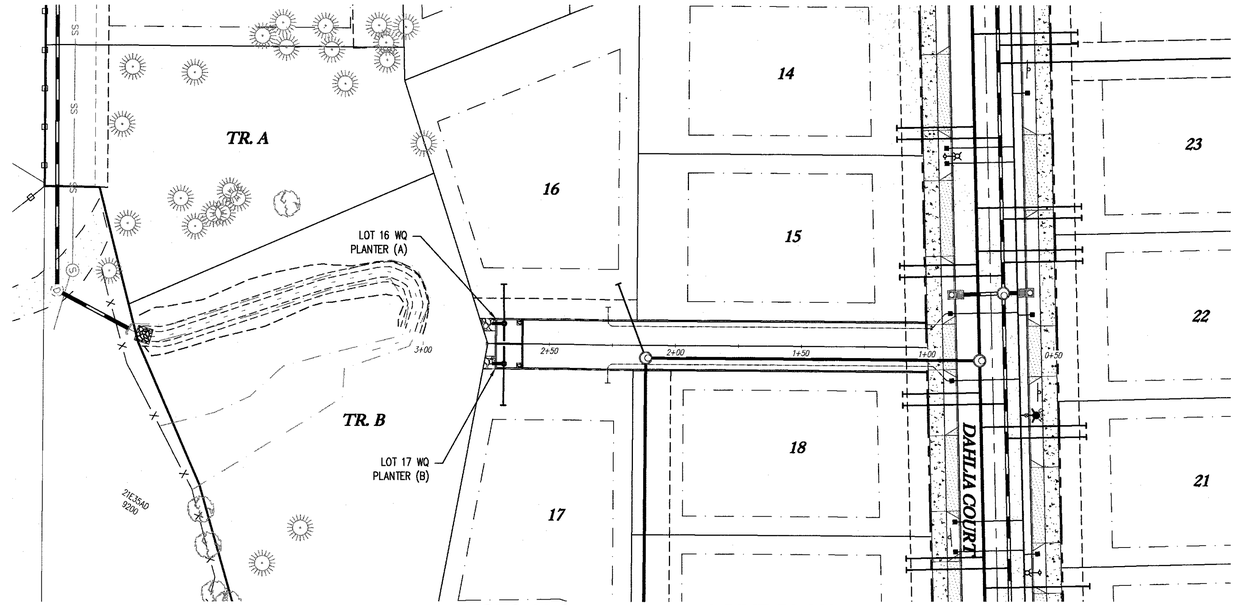

LOTS 16 & 17 PRIVATE DRIVE PLAN

SCALE: 1"=30'

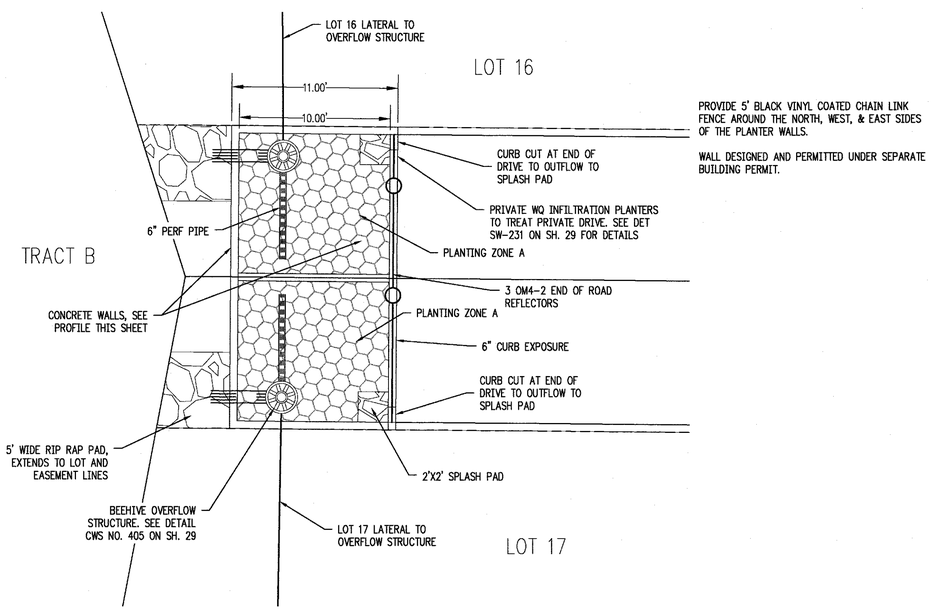

PROVIDE 5' BLACK VINYL COATED CHAIN LINK FENCE AROUND THE NORTH, WEST, & EAST SIDES OF THE PLANTER WALLS.

WALL DESIGNED AND PERMITTED UNDER SEPARATE BUILDING PERMIT.

LOTS 16 & 17 PRIVATE DRIVE PLANTER BOXES

SCALE: 1"=5'

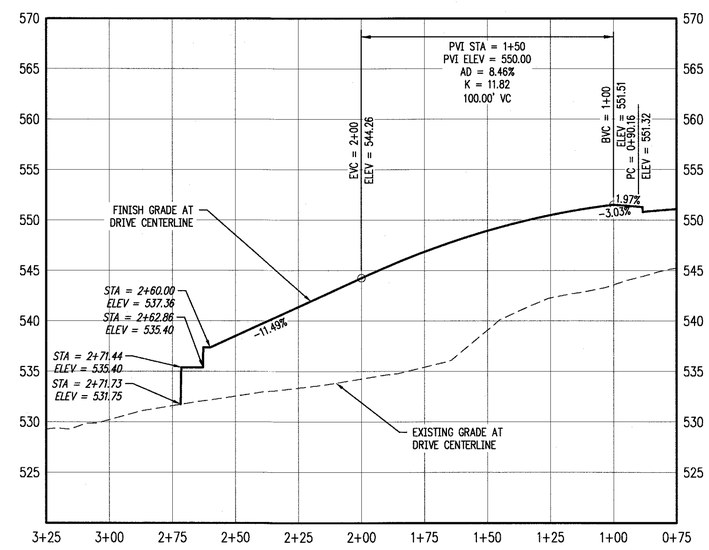

LOTS 16 & 17 PRIVATE DRIVE PROFILE

SCALE: 1"=30' HORZ. 1"=7.5' VERT.

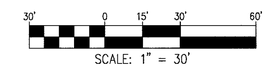

SCALE: 1" = 30'

APPROVED FOR CONSTRUCTION BY
CITY OF WEST LINN
This approval is only for general conformance with the design concept and general compliance with applicable codes and requirements and shall not be construed as relieving the Design Engineer of full responsibility for accuracy and completeness of the drawings. This plan review approval does not prevent the City from requiring further code corrections in the field.
DATE: 10/22/2020

23190 BLAND CIRCLE
SUBDIVISION
TAX MAP 2S1E 35AB
TAX LOT 9100
CITY OF WEST LINN, OREGON

LOTS 16 & 17 PRIVATE DRIVE PLAN & PROFILE

REVISIONS

NO.	DATE	DESCRIPTION
0	02/19	PLANNING SUBMITTAL
1	08/19	PLANNING RESUBMITTAL
2	10/19	ENGINEERING 1ST SUBMITTAL
3	03/20	ENGINEERING 2ND SUBMITTAL

EMERIO Design
6445 SW FALLBROOK PLACE, SUITE 100
BEAVERTON, OREGON 97008
TEL: (503) 746-8812
FAX: (503) 639-9592
www.emeriodesign.com

REGISTERED PROFESSIONAL ENGINEER 54665 — DocuSigned by: Eric D. Evans 5B474C09E5B44... 11/2/2020 — ERIC DANIEL EVANS — EXPIRES: 12/31/2021

SHEET 16 OF 31

FILE:P:\0542-001 23190 S Bland Circle\dwg\civil\Engineering Set\0542-001_16drive, Layout: 16 SATTER STREET PROFILE, Plot Date: 5/22/2020 3:36 PM, by: Josh Ayers

DocuSign Envelope ID: CFBE966A-192B-4378-9E32-B4C08CAC394B

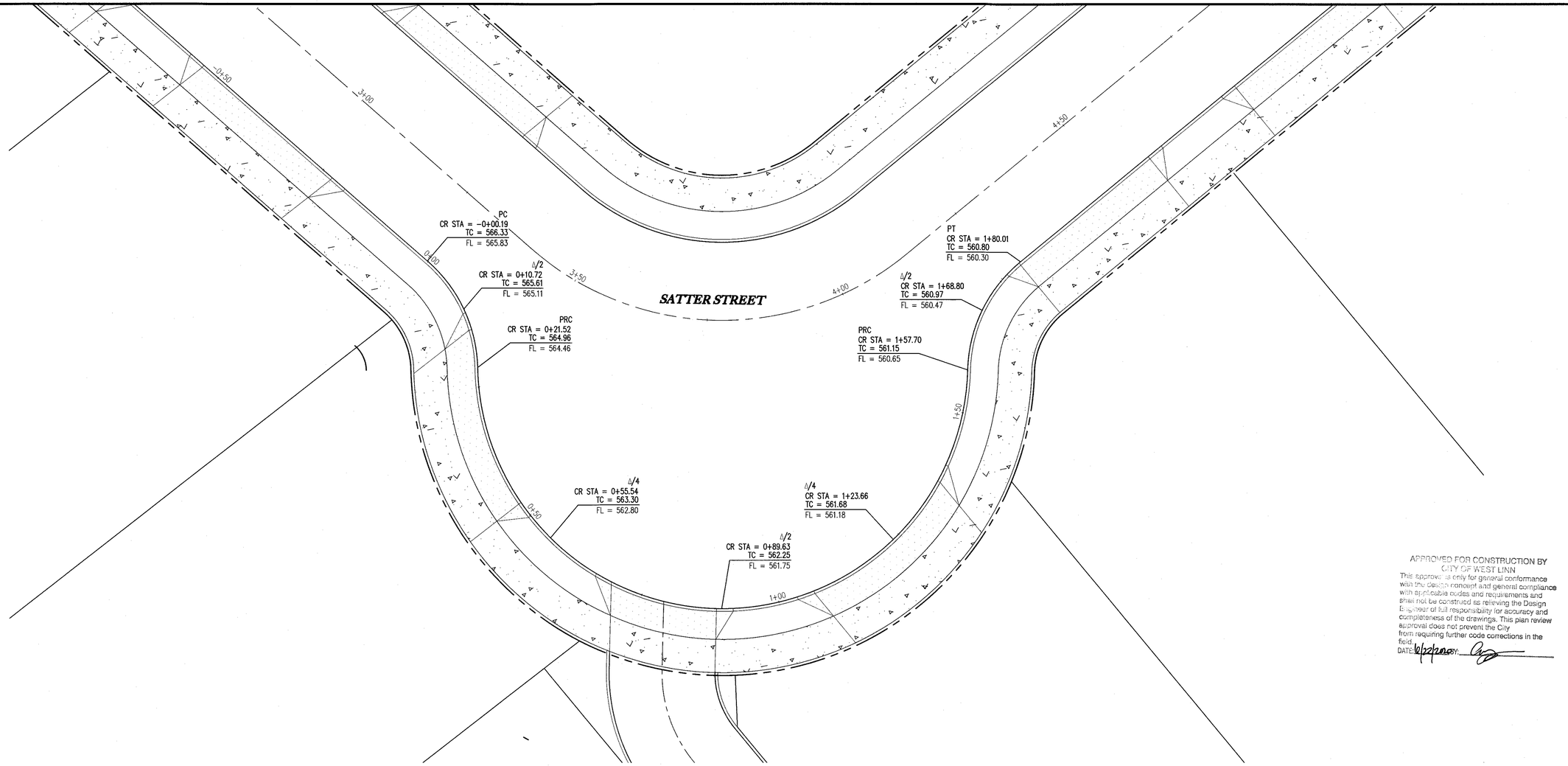

SATTER STREET BROW - PLAN (1)

SCALE: 1"=10'

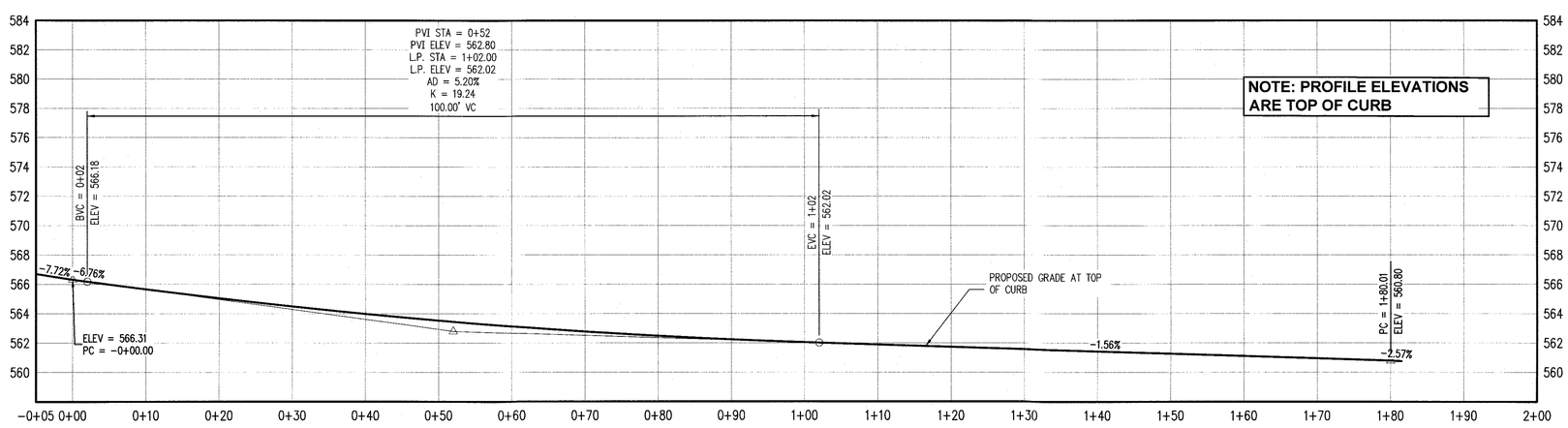

SATTER STREET BROW - PROFILE (1)

SCALE: 1"=10' HORIZ. 1"=5' VERT.

APPROVED FOR CONSTRUCTION BY
CITY OF WEST LINN
This approval is only for general conformance with the design concept and general compliance with applicable codes and requirements and shall not be construed as relieving the Design Engineer of full responsibility for accuracy and completeness of the drawings. This plan review approval does not prevent the City from requiring further code corrections in the field.
DATE: 6/22/2020 BY:

23190 BLAND CIRCLE SUBDIVISION
TAX MAP 2S1E 35AB
TAX LOT 9100
CITY OF WEST LINN, OREGON

SATTER STREET BROW DETAILS

REVISIONS

NO.	DATE	DESCRIPTION
0	02/19	PLANNING SUBMITTAL
1	08/19	PLANNING RESUBMITTAL
2	10/19	ENGINEERING 1ST SUBMITTAL
3	03/20	ENGINEERING 2ND SUBMITTAL

EMERIO Design
6445 SW FALLBROOK PLACE, SUITE 100
BEAVERTON, OREGON 97008
TEL: (503) 746-8812
FAX: (503) 639-9592
www.emeriodesign.com

REGISTERED PROFESSIONAL ENGINEER 54665 Docusigned by: Eric D. Evans 3994F4C69E4A4A8... 6/22/2020 ERIC DANIEL EVANS
EXPIRES: 12/31/2021

SHEET 17 OF 31

FILE:P:\0542-001 23190 S Bland Circle\dwg\civil\Engineering Set\0542-001_17brow, Layout: 17 SATTER STREET BROW DETAILS, Plot Date: 5/22/2020 3:36 PM, by: Josh Ayers

DocuSign Envelope ID: CFBE966A-192B-4378-9E32-B4C08CAC394B

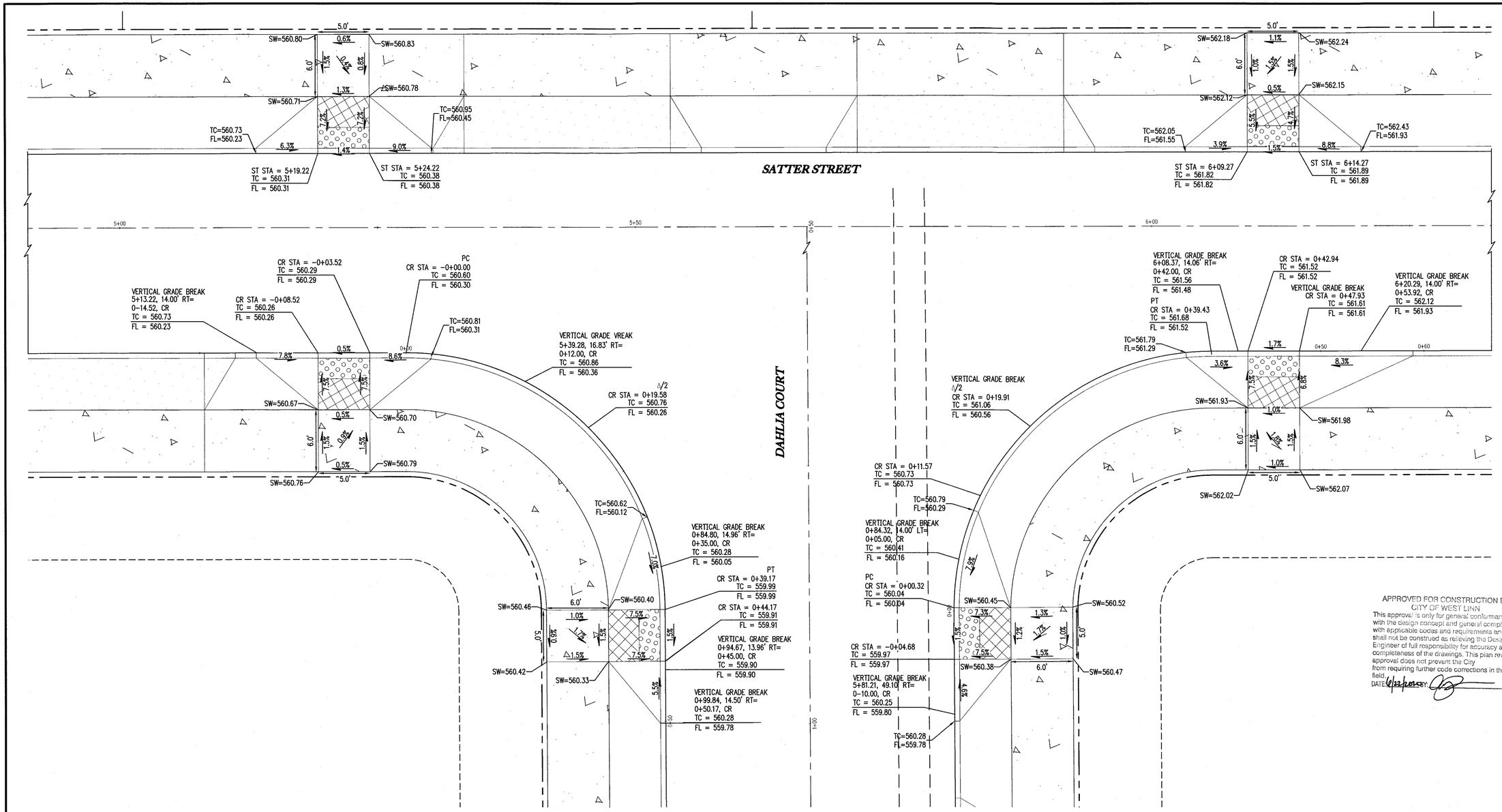

CURB RETURNS & ADA RAMPS - SATTER & DAHLIA (2)(3)

1"=5'

APPROVED FOR CONSTRUCTION BY
CITY OF WEST LINN
This approval is only for general conformance with the design concept and general compliance with applicable codes and requirements and shall not be construed as relieving the Design Engineer of full responsibility for accuracy and completeness of the drawings. This plan review approval does not prevent the City from requiring further code corrections in the field.
DATE: 6/22/2020 BY:

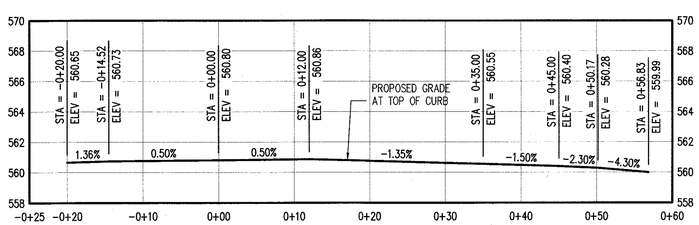

CURB RETURN SATTER SE - PROFILE (2)

SCALE: 1"=10' HORIZ. 1"=5' VERT.

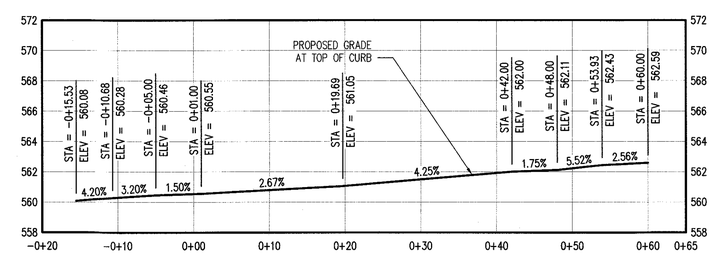

CURB RETURN SATTER NE - PROFILE (3)

SCALE: 1"=10' HORIZ. 1"=5' VERT.

23190 BLAND CIRCLE
SUBDIVISION
TAX MAP 2S1E 35AB
TAX LOT 9100
CITY OF WEST LINN, OREGON

SATTER ST. & DAHLIA CT. CURB RETURNS

REVISIONS

NO.	DATE	DESCRIPTION
0	02/19	PLANNING SUBMITTAL
1	08/19	PLANNING RESUBMITTAL
2	10/19	ENGINEERING 1ST SUBMITTAL
3	03/20	ENGINEERING 2ND SUBMITTAL

EMERIO Design
6445 SW FALLBROOK PLACE, SUITE 100
BEAVERTON, OREGON 97008
TEL: (503) 746-8812
FAX: (503) 639-9592
www.emeriodesign.com

REGISTERED PROFESSIONAL ENGINEER
54665
DocuSigned by:
Eric D. Evans
ERIC DANIEL EVANS
EXPIRES: 12/31/2021

SHEET 18 OF 31

FILE:P:\0542-001 23190 S Bland Circle\dwg\civil\Engineering Set\0542-001_18cart, Layout: SATTER & DAHLIA CURB RETURNS, Plot Date: 5/22/2020 3:36 PM, by: Josh Ayers

DocuSign Envelope ID: CFBE966A-192B-4378-9E32-B4C08CAC394B

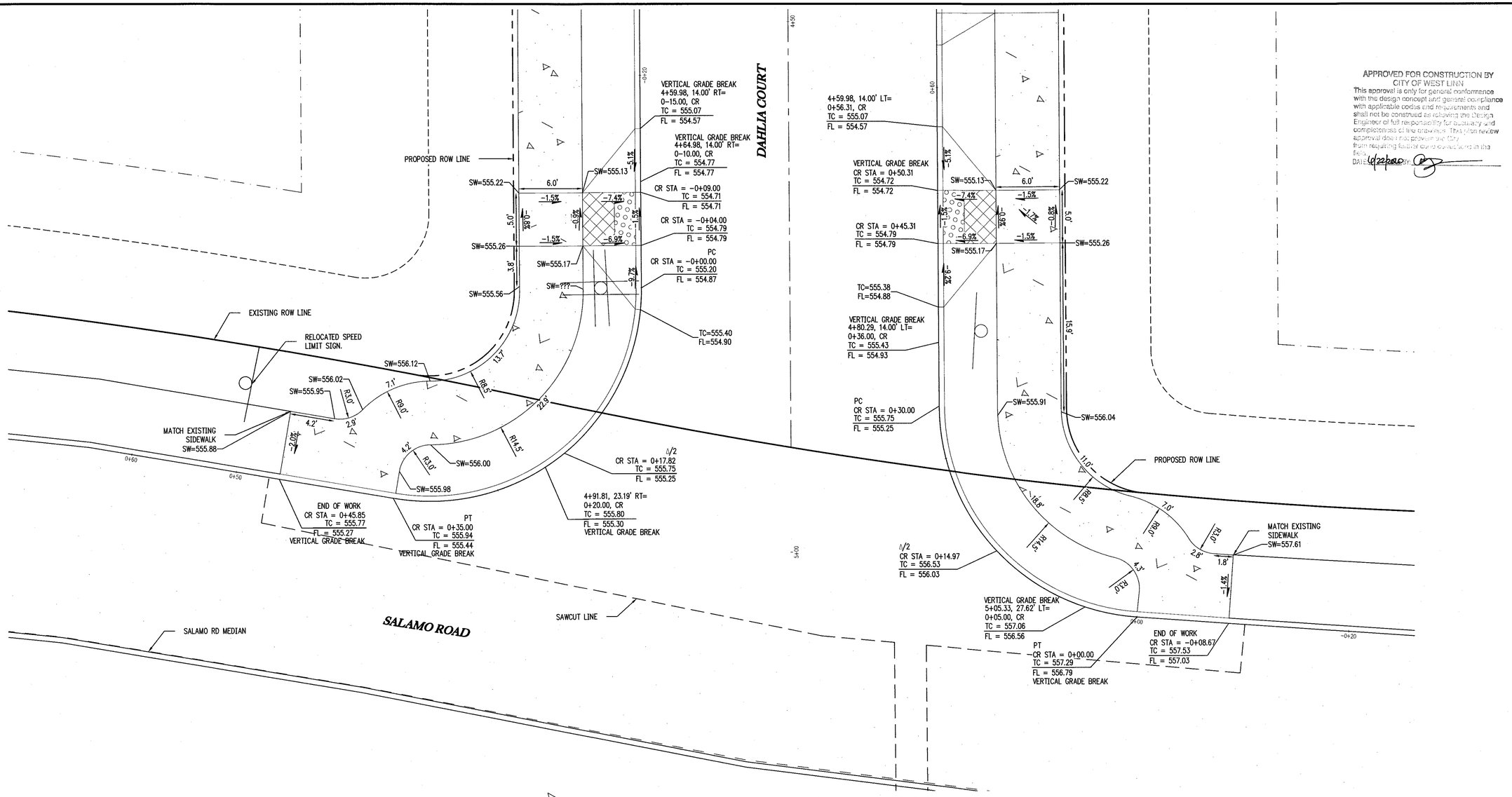

CURB RETURNS & ADA RAMPS - DAHLIA & SALAMO (4) (5)

1"=5'

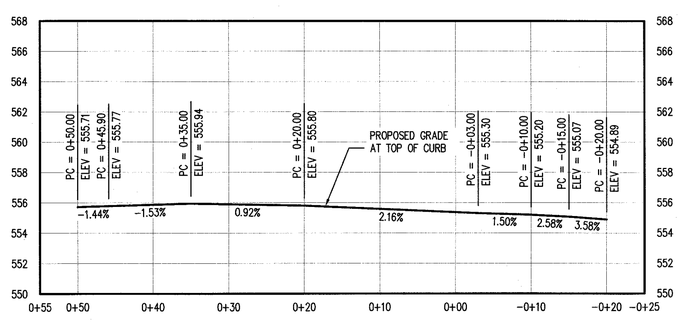

CURB RETURN SOUTH - PROFILE (4)

SCALE: 1"=10' HORIZ. 1"=5' VERT.

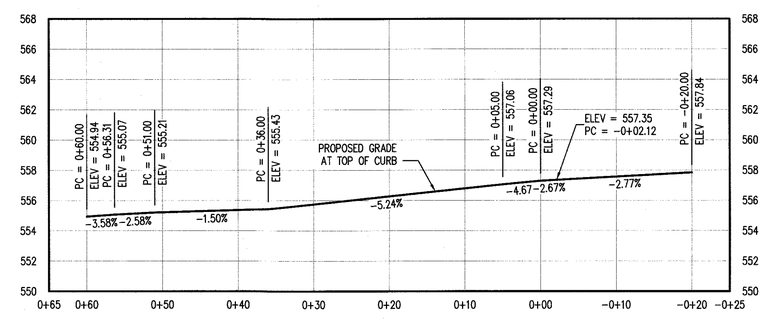

CURB RETURN NORTH - PROFILE (5)

SCALE: 1"=10' HORIZ. 1"=5' VERT.

23190 BLAND CIRCLE SUBDIVISION
TAX MAP 2S1E 35AB
TAX LOT 9100
CITY OF WEST LINN, OREGON

SATTER ST. & DAHLIA CT. CURB RETURNS

REVISIONS

NO.	DATE	DESCRIPTION
0	02/19	PLANNING SUBMITTAL
1	08/19	PLANNING RESUBMITTAL
2	10/19	ENGINEERING 1ST SUBMITTAL
3	03/20	ENGINEERING 2ND SUBMITTAL

EMERIO Design
6445 SW FALLBROOK PLACE, SUITE 100
BEAVERTON, OREGON 97008
TEL: (503) 746-8812
FAX: (503) 639-9592
www.emeriodesign.com

REGISTERED PROFESSIONAL ENGINEER 54665 OREGON JULY 11, 2003 ERIC DANIEL EVANS
DocuSigned by: Eric D Evans 2D847A0B9EA94A9... 5/22/2020
EXPIRES: 12/31/2021

SHEET 19 OF 31

FILE P:\0542-001 23190 S Bland Circle\dwg\civ\Engineering Set\0542-001_13cbrt, Layout: DAHLIA CT. & SALAMO RD. CURB RETURNS, Plot Date: 5/22/2020 3:37 PM, by: Josh Ayers

DocuSign Envelope ID: CFBE966A-192B-4378-9E32-B4C08CAC394B

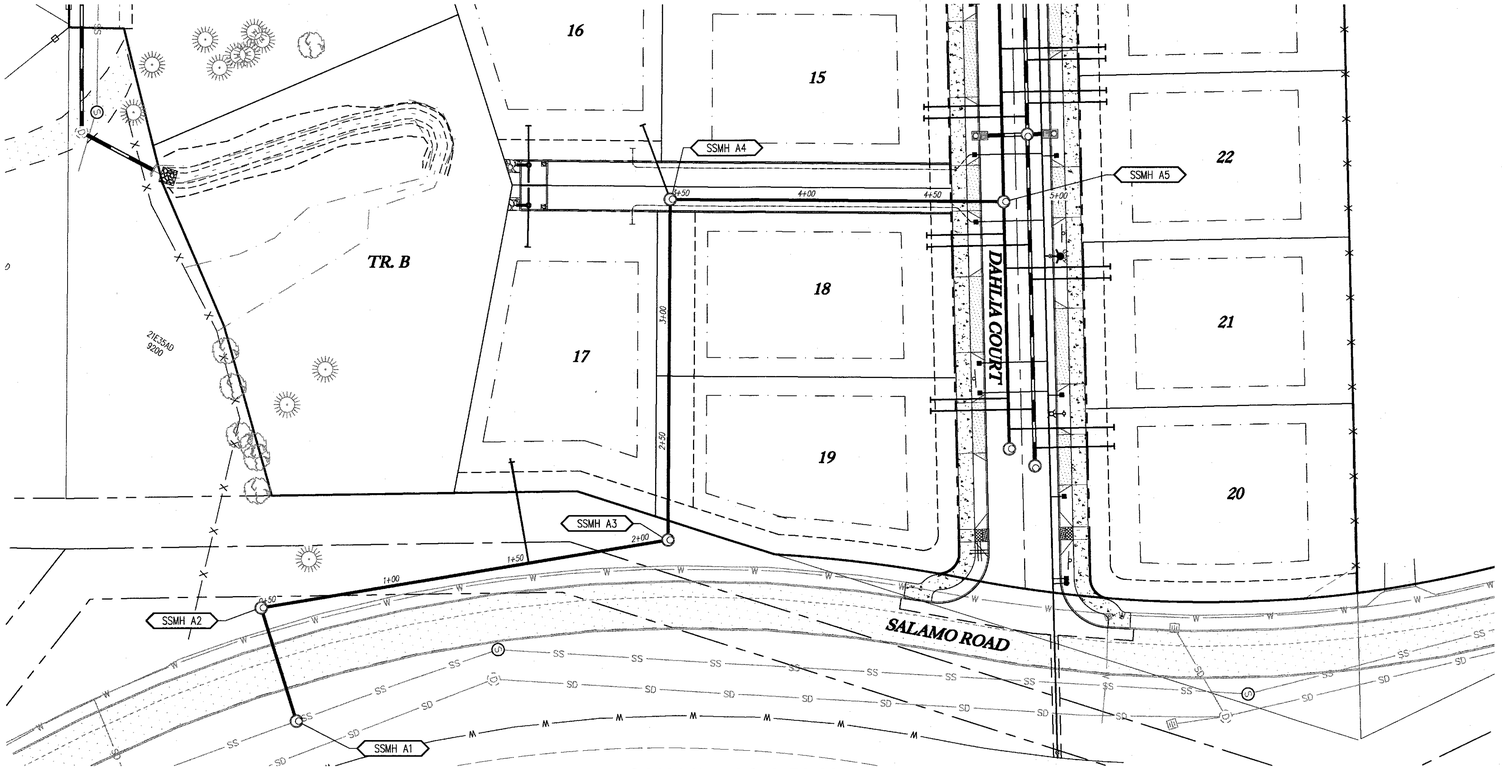

SAN LINE SS-A PLAN

SCALE: 1"=30'

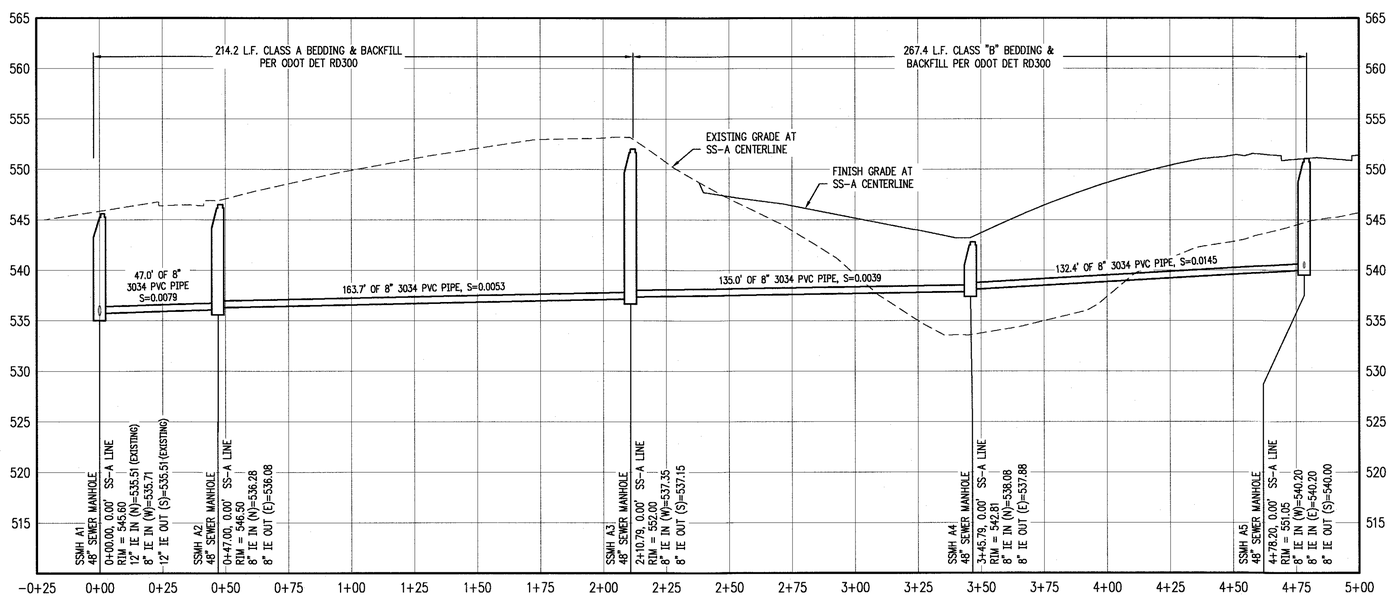

SAN LINE SS-A PROFILE

SCALE: 1"=30' HORZ. 1"=7.5' VERT.

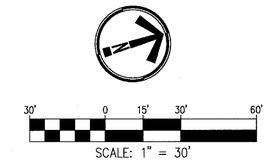

APPROVED FOR CONSTRUCTION BY CITY OF WEST LINN
This approval is only for general conformance with the design concept and general compliance with applicable codes and requirements and shall not be construed as relieving the Design Engineer of full responsibility for accuracy and completeness of the drawings. This plan review approval does not prevent the City from requiring further code corrections in the field.
DATE: 6/22/2020 BY:

SANITARY SEWER LATERAL TABLE

LOT NUM.	STA @ M.L.	SIZE & MATERIAL	LEN	I.E. @ M.L.	ASB	I.E. @ PLUG	ASB	SL	ASB	COVER @ PLUG	ASB
LOT 16	3+46	4" 3034 PVC	31.3'	538.10		538.70		0.0192		4.8'	
LOT 17	1+55	4" 3034 PVC	41.9'	537.02		540.00		0.0710		5.3'	

23190 BLAND CIRCLE SUBDIVISION
TAX MAP 2S1E 35AB
TAX LOT 9100
CITY OF WEST LINN, OREGON

SANITARY LINE SS-A PLAN & PROFILE

REVISIONS

NO.	DATE	DESCRIPTION
0	02/19	PLANNING SUBMITTAL
1	08/19	PLANNING RESUBMITTAL
2	10/19	ENGINEERING 1ST SUBMITTAL
3	03/20	ENGINEERING 2ND SUBMITTAL

EMERIO Design
6445 SW FALLBROOK PLACE, SUITE 100
BEAVERTON, OREGON 97008
TEL: (503) 746-8812
FAX: (503) 639-9592
www.emeriodesign.com

REGISTERED PROFESSIONAL ENGINEER 54665 DocuSigned by: Eric D. Evans 9364746A6A6A4A9 ERIC DANIEL EVANS EXPIRES: 12/31/2021

SHEET 20 OF 31

FILE:P:\0542-001 23190 S Bland Circle\dwg\civ\Engineering Set\0542-001_20ss4, Layout: 10 SATTER STREET PROFILE, Plot Date: 5/22/2020 3:37 PM, by: Josh Ayers

DocuSign Envelope ID: CFBE966A-192B-4378-9E32-B4C08CAC394B

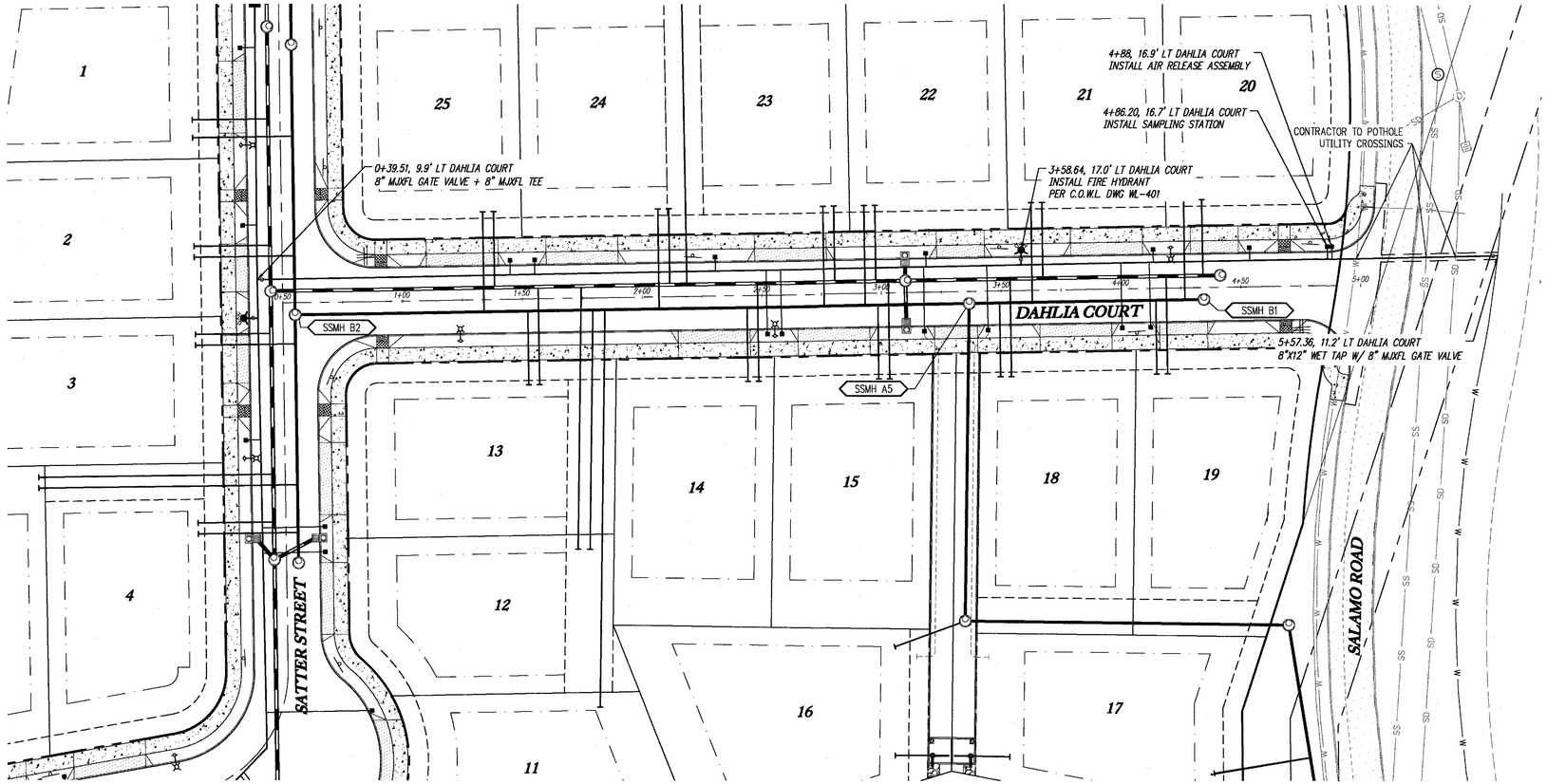

SANITARY LINE SS-B & WATERLINE (DAHLIA CT)- PLAN

SCALE: 1"=30'

APPROVED FOR CONSTRUCTION BY
CITY OF WEST LINN
This approval is only for general conformance with the design concept and general compliance with applicable codes and requirements and shall not be construed as relieving the Design Engineer of full responsibility for accuracy and completeness of the drawings. This plan review approval does not prevent the City from requiring further code corrections in the field.
DATE: 6/22/2020 BY:

30' 0 15' 30' 60'
SCALE: 1" = 30'

WATERLINE PIPE RESTRAINT TABLE:

PIPE TYPE	PIPE SIZE	FITTING TYPE	RESTRAINT LENGTH
DIP	8"	11.25° BEND	3'
DIP	8"	22.5° BEND	6'
DIP	8"	45.0° BEND	13'
DIP	8"	45.0° BEND	30'
RESTRAINT LENGTH BASED ON CALCULATIONS FROM DIPRA			

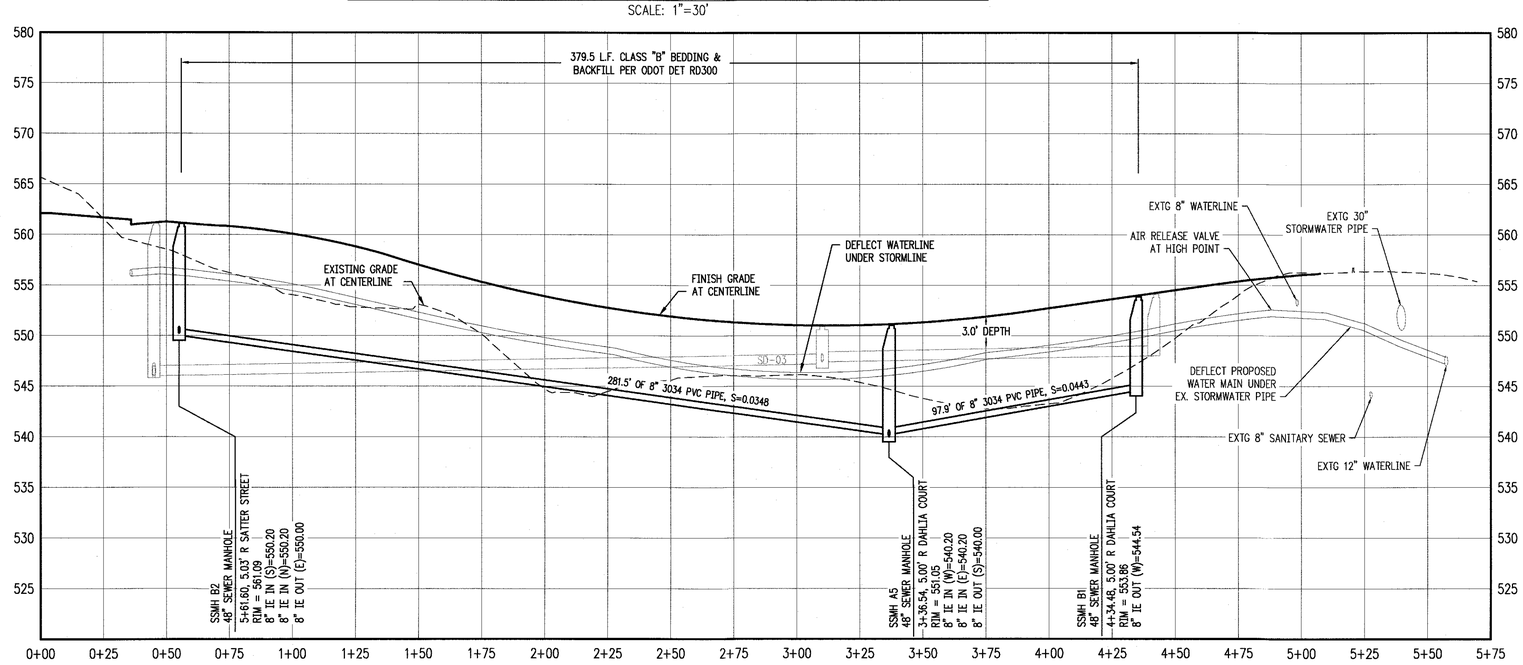

SANITARY LINE SS-B & WATERLINE (DAHLIA CT)- PROFILE

SCALE: 1"=30' HORZ. 1"=7.5' VERT.

SANITARY SEWER LATERAL TABLE

LOT NUM.	STA @ M.L.	SIZE & MATERIAL	LEN	I.E. @ M.L.	ASB	I.E. @ PLUG	ASB	SL	ASB	COVER @ PLUG	ASB
LOT 11	3+00	4" 3034 PVC	165.8'	545.66		550.00		0.0262		1.8'	
LOT 12	3+05	4" 3034 PVC	99.8'	545.84		548.00		0.0217		3.8'	
LOT 13	3+32	4" 3034 PVC	30.8'	546.78		547.50		0.0233		8.3'	
LOT 14	2+41	4" 3034 PVC	30.8'	543.60		545.00		0.0455		6.7'	
LOT 15	1+86	6" C900 PVC	30.8'	541.69		543.00		0.0424		7.5'	
LOT 18	1+35	6" C900 PVC	30.8'	540.93		544.00		0.0996		6.7'	
LOT 19	0+70	4" 3034 PVC	30.8'	543.82		546.00		0.0708		6.8'	
LOT 20	0+58	4" 3034 PVC	41.7'	544.36		546.00		0.0394		8.0'	
LOT 21	1+22	4" 3034 PVC	41.7'	541.54		545.00		0.0831		6.9'	
LOT 22	1+91	4" 3034 PVC	41.7'	541.88		545.00		0.0748		6.4'	
LOT 23	2+08	4" 3034 PVC	41.7'	542.47		545.00		0.0606		6.6'	
LOT 24	2+77	4" 3034 PVC	41.7'	544.87		546.00		0.0270		7.8'	
LOT 25	3+50	4" 3034 PVC	41.7'	547.42		552.00		0.1098		6.5'	

23190 BLAND CIRCLE SUBDIVISION
TAX MAP 2S1E 35AB
TAX LOT 9100
CITY OF WEST LINN, OREGON

SAN. LINE SS-B & WATERLINE PLAN & PROFILE

REVISIONS

NO.	DATE	DESCRIPTION
0	02/19	PLANNING SUBMITTAL
1	08/19	PLANNING RESUBMITTAL
2	10/19	ENGINEERING 1ST SUBMITTAL
3	03/20	ENGINEERING 2ND SUBMITTAL

EMERIO Design
6445 SW FALLBROOK PLACE, SUITE 100
BEAVERTON, OREGON 97008
TEL: (503) 746-8812
FAX: (503) 639-9592
www.emeriodesign.com

REGISTERED PROFESSIONAL ENGINEER 54665 OREGON JULY 14, 2006 ERIC DANIEL EVANS
Digitally signed by: Eric D. Evans
EXPIRES: 12/31/2021

SHEET 21 OF 31

FILE:P:\0542-001 23190 S Bland Circle\dwg\civil\Engineering Set\0542-001_21ssb, Layout: 11 DAHLIA COURT PROFILE, Plot Date: 6/18/2020 4:44 PM, by: Josh Ayers

DocuSign Envelope ID: CFBE966A-192B-4378-9E32-B4C08CAC394B

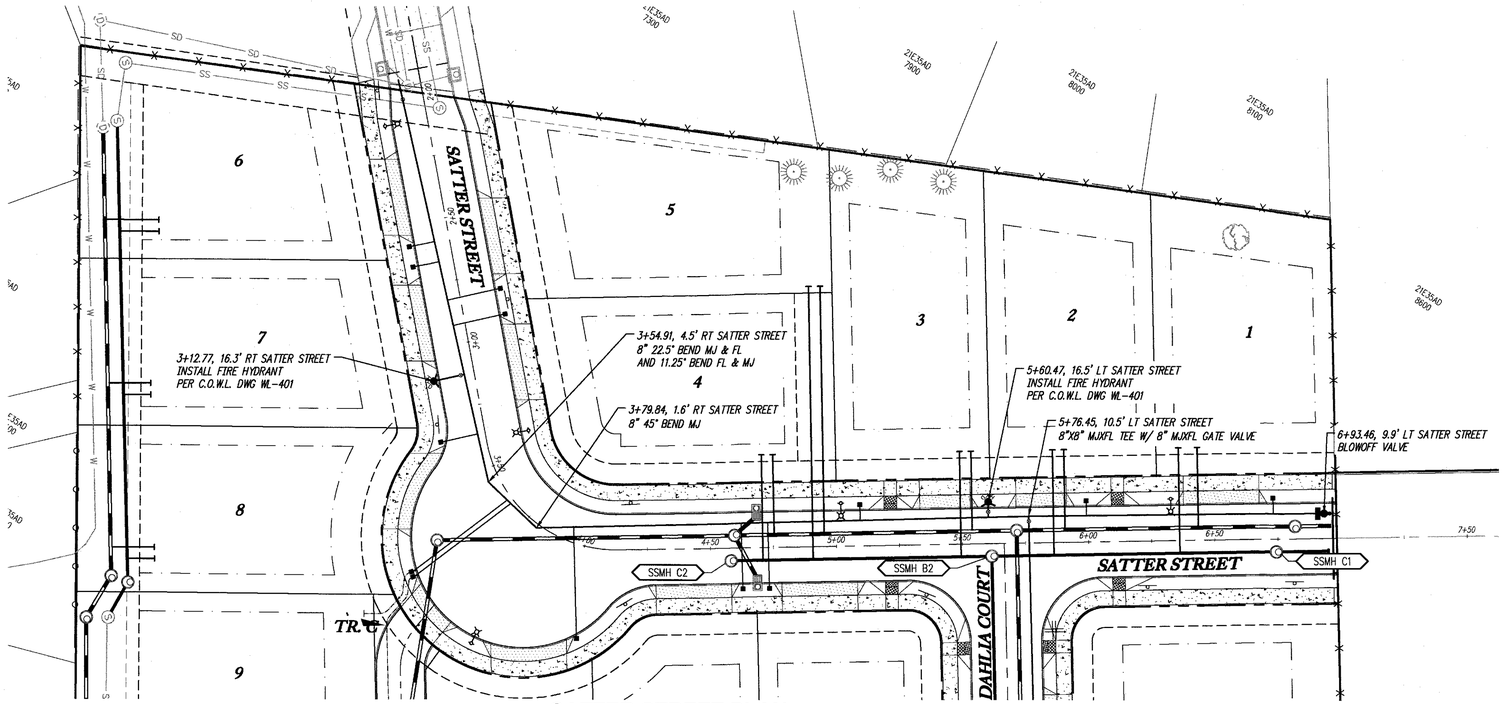

SATTER STREET PLAN

SCALE: 1"=30'

APPROVED FOR CONSTRUCTION BY
CITY OF WEST LINN
This approval is only for general conformance with the design concept and general compliance with applicable codes and requirements and shall not be construed as relieving the Design Engineer of full responsibility for accuracy and completeness of the drawings. This plan review approval does not prevent the City from requiring further code corrections in the field.
DATE: 6/22/2020 BY:

30' 0 15' 30' 60'
SCALE: 1" = 30'

WATERLINE PIPE RESTRAINT TABLE:

PIPE TYPE	PIPE SIZE	FITTING TYPE	RESTRAINT LENGTH
DIP	8"	11.25° BEND	3'
DIP	8"	22.5° BEND	6'
DIP	8"	45.0° BEND	13'
DIP	8"	45.0° BEND	30'
RESTRAINT LENGTH BASED ON CALCULATIONS FROM DIPRA			

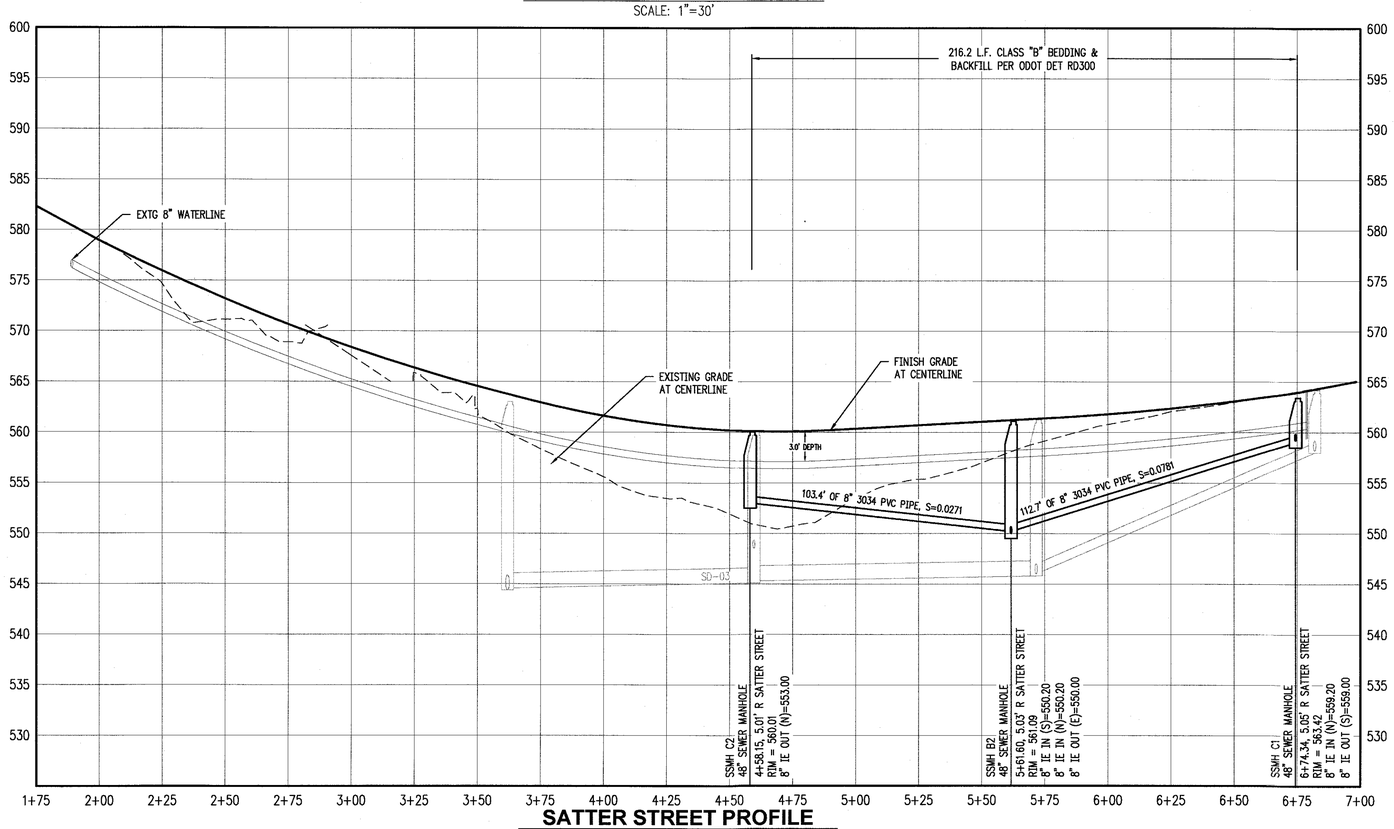

SATTER STREET PROFILE

SCALE: 1"=30' HORZ. 1"=7.5' VERT.

SANITARY SEWER LATERAL TABLE

LOT NUM.	STA @ M.L.	SIZE & MATERIAL	LEN	I.E. @ M.L.	ASB	I.E. @ PLUG	ASB	SL	ASB	COVER @ PLUG	ASB
LOT 1	1+09	4" 3034 PVC	41.7'	556.18		558.30		0.0507		4.6'	
LOT 2	1+59	4" 3034 PVC	41.7'	552.29		556.70		0.1057		5.1'	
LOT 3	1+96	4" 3034 PVC	41.7'	550.70		555.00		0.1032		6.3'	
LOT 4	2+74	4" 3034 PVC	41.7'	552.82		555.00		0.0522		6.0'	
LOT 5	2+54	4" 3034 PVC	108.0'	552.28		562.84		0.0977		5.3'	

23190 BLAND CIRCLE
SUBDIVISION
TAX MAP 2S1E 35AB
TAX LOT 9100
CITY OF WEST LINN, OREGON

SANITARY LINE SS-C &
WATERLINE PLAN &
PROFILE

REVISIONS

NO.	DATE	DESCRIPTION
0	02/19	PLANNING SUBMITTAL
1	08/19	PLANNING RESUBMITTAL
2	10/19	ENGINEERING 1ST SUBMITTAL
3	03/20	ENGINEERING 2ND SUBMITTAL

EMERIO Design
6445 SW FALLBROOK PLACE, SUITE 100
BEAVERTON, OREGON 97008
TEL: (503) 746-8812
FAX: (503) 639-9592
www.emeriodesign.com

REGISTERED PROFESSIONAL ENGINEER
54665
DocuSigned by:
Eric D. Evans
D9474C09E5A24BF...
6/19/2020
ERIC DANIEL EVANS
EXPIRES: 12/31/2021

SHEET
22
OF
31

FILE:P:\0542-001 23190 S Bland Circle\dwg\civil\Engineering Set\0542-001_22ssc, Layout: 22 SATTER STREET PROFILE, Plot Date: 6/19/2020 8:56 AM, by: Josh Ayers

DocuSign Envelope ID: CFBE966A-192B-4378-9E32-B4C08CAC394B

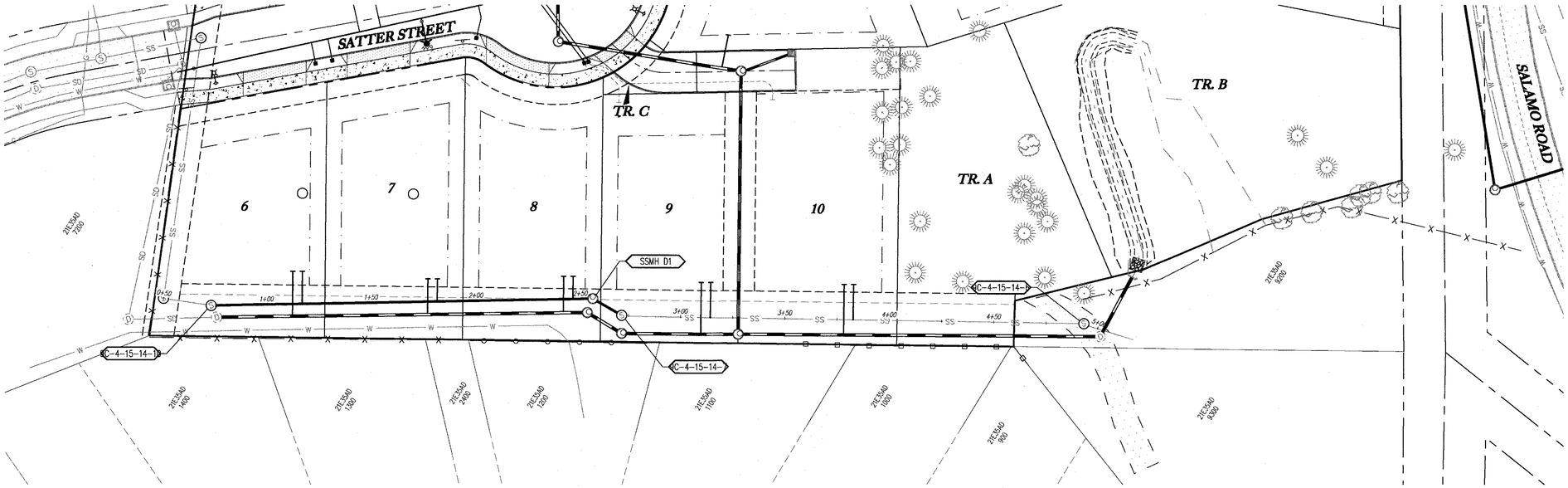

SAN LINE SS-D PLAN

SCALE: 1"=30'

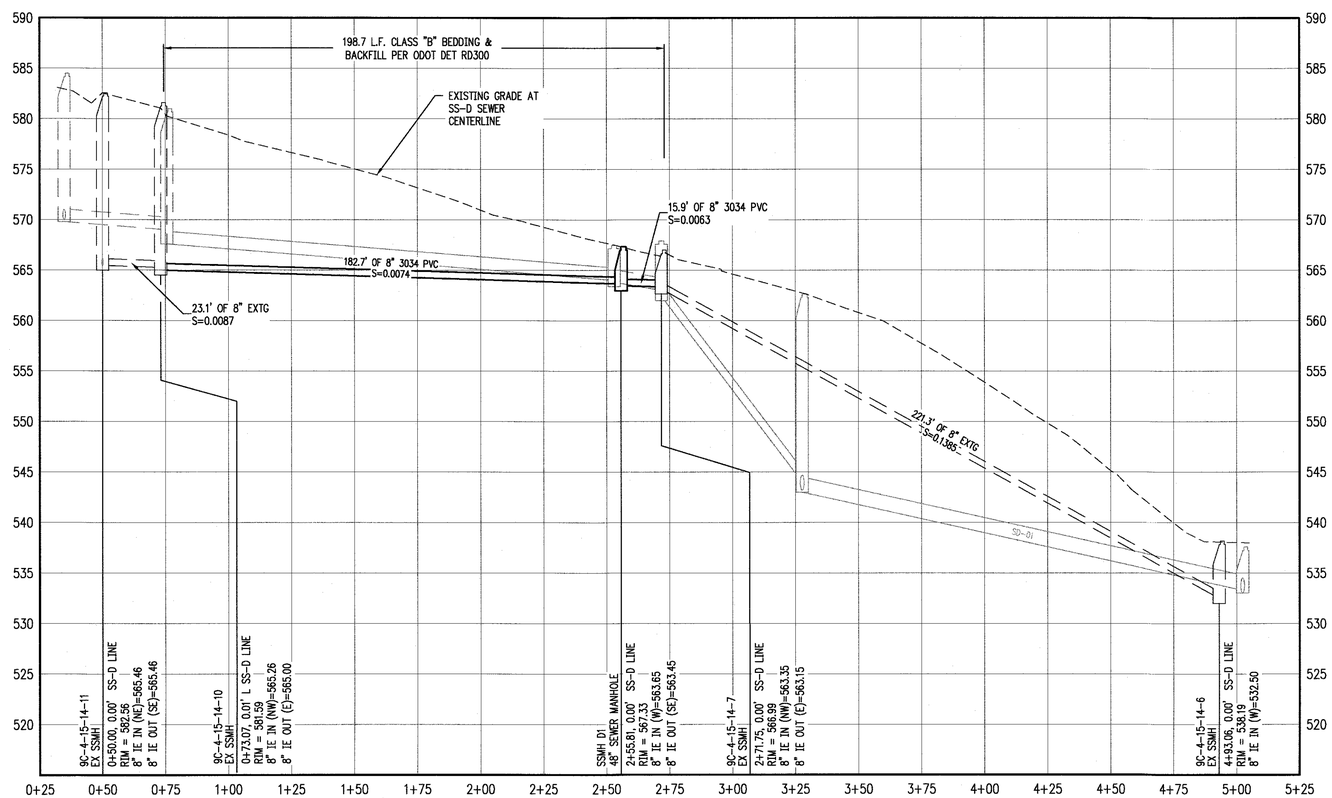

SAN LINE SS-D PROFILE

SCALE: 1"=30' HORZ. 1"=7.5' VERT.

30' 0 15' 30' 60'

SCALE: 1" = 30'

APPROVED FOR CONSTRUCTION BY
CITY OF WEST LINN
This approval is only for general conformance with the design concept and general compliance with applicable codes and requirements and shall not be construed as relieving the Design Engineer of full responsibility for accuracy and completeness of the drawings. This plan review approval does not prevent the City from requiring further code corrections in the field.
DATE: 6/22/2020 BY:

SANITARY SEWER LATERAL TABLE

LOT NUM.	STA @ M.L.	SIZE & MATERIAL	LEN	I.E. @ M.L.	ASB	I.E. @ PLUG	ASB	SL	ASB	COVER @ PLUG	ASB
LOT 6	1+17	4" 3034 PVC	15.5'	564.84		571.28		0.4146		4.8'	
LOT 7	1+81	4" 3034 PVC	10.8'	564.37		566.00		0.1514		5.3'	
LOT 8	2+46	6" C900 PVC	10.8'	563.88		564.00		0.0108		1.2'	
LOT 9	3+14	4" 3034 PVC	16.6'	557.44		558.00		0.0337		3.8'	
LOT 10	3+83	4" 3034 PVC	16.7'	547.96		549.50		0.0923		2.6'	

23190 BLAND CIRCLE
SUBDIVISION
TAX MAP 2S1E 35AB
TAX LOT 9100
CITY OF WEST LINN, OREGON

SANITARY LINE SS-D PLAN & PROFILE

REVISIONS

NO.	DATE	DESCRIPTION
0	02/19	PLANNING SUBMITTAL
1	08/19	PLANNING RESUBMITTAL
2	10/19	ENGINEERING 1ST SUBMITTAL
3	03/20	ENGINEERING 2ND SUBMITTAL

EMERIO Design
6445 SW FALLBROOK PLACE, SUITE 100
BEAVERTON, OREGON 97008
TEL: (503) 746-8812
FAX: (503) 639-9592
www.emeriodesign.com

REGISTERED PROFESSIONAL ENGINEER
54665
DocuSigned by:
Eric D. Evans
C936474C66E2444...
6/24/2020 11:20 AM PDT
ERIC DANIEL EVANS
EXPIRES: 12/31/2021

SHEET 23 OF 31

FILE:P:\0542-001 23190 S Bland Circle\dwg\civil\Engineering Set\0542-001_23ssb, Layout: 17 SD-01 STORM LINE, Plot Date: 5/22/2020 3:37 PM, by: Josh Ayers

DocuSign Envelope ID: CFBE966A-192B-4378-9E32-B4C08CAC394B

LP/X = INSTALL NEW LUMINAIRE ON POLE #. (X = POLE #).

PUBLIC STREET LIGHTING OPTION "A" NOTES:

1. LIGHT POLE SHALL BE 30-FOOT DIRECT BURIED, 25-FOOT MOUNTING HEIGHT, TWO-PIECE BRONZE, FIBERGLASS LIGHT POLE.

PGE APPROVED LIGHT POLES ARE:
SHAKESPEARE BHT3099S5BL9901
CMT MDS30-F-100-S2-HS-PC-NP-1B-22

PGE APPROVED STUBS ARE:
SHAKESPEARE BHS3099N3BL9901
CMT 25-STUB-UP

2. JUNCTION BOXES SHALL BE PGE APPROVED SPLICE BOXES.

PGE APPROVED JUNCTION BOXES ARE:
NEWBASIS FCA132418T-00043
QUAZITE A4213418A017
ARMORCAST A6001946TAX18-PGE
HIGHLINE CHA132418HE1

"ELECTRIC" OR "POWER" SHALL BE IN THE LID MARKING AREA.

3. LUMINAIRES SHALL BE PGE APPROVED 47 WATT LED, 240V, MAST-ARM MOUNTED, BRONZE SHOEBOX FIXTURE WITH TWISTLOCK P.E. RECEPTACLE.

PGE APPROVED SHOEBOX LUMINAIRES ARE:
47W CREE STR-LWY-2M-HT-02-E-UL-BZ-700-40K-R-UTL

4. THE PHOTOELECTRIC CONTROL SHALL BE PGE APPROVED EXTENDED LIFE TWISTLOCK, FAIL-ON, ELECTRONIC, 105-300 VAC, 60 HZ, PER ANSI 136.10, BRONZE HOUSING, 1.5 LUMEN TURN-ON, RATED 1000W TUNGSTEN (1800 VA BALLAST) 1.5:1 TURN-OFF/TURN-ON RATIO, SOLID BRASS PLUG BLADES, CONFORMABLY COATED CDS CELL, 160 JOULE MOV, 2-4 SEC. TURN-OFF DELAY.

PGE APPROVED PHOTOELECTRIC CONTROLS ARE:
RIPLEY RD8645
DTL DLL 1271.5 J50

5. THE WIRING FROM THE SPLICE BOX TO THE LUMINAIRE SHALL BE PGE APPROVED #10AWG, 600-VOLT, 3-CONDUCTOR, CLASS B STANDING TYPE TC WITH 45-MIL SUNLIGHT RESISTANT PVC JACKET, SUITABLE FOR DIRECT BURIED APPLICATIONS. RATED 90°C DRY AND 75°C WET.

FOR 240-VOLT APPLICATIONS, THE PGE WIRING CONFIGURATION IS:
BLACK AND RED (HOT)
GREEN (GROUND)

6. ALL MATERIALS AND WORKMANSHIP SHALL CONFORM TO P.G.E. SCHEDULE "95" OPTION "A" SPECIFICATIONS. ALL MATERIALS AND INSTALLATION SHALL BE APPROVED BY P.G.E. LIGHT POLES AND STREET LIGHTS TO BE INSTALLED BY P.G.E.

7. LIGHTING CONTRACTOR/INSTALLER IS SOLELY RESPONSIBLE FOR INSTALLATION OF CORRECT MATERIAL BASED ON CURRENT PGE APPROVED MATERIAL LIST AND JURISDICTION SPECIFICATIONS AND STANDARDS. LIGHT POLE AND FIXTURE SUBMITTAL TO PROPER JURISDICTION RECOMMENDED.

APPROVED FOR CONSTRUCTION BY
CITY OF WEST LINN
This approval is only for general conformance with the design concept and general compliance with applicable codes and requirements and shall not be construed as relieving the Design Engineer of full responsibility for accuracy and completeness of the drawings. This plan review approval does not prevent the City from requiring further code corrections in the field.
DATE 10/22/2020 BY:

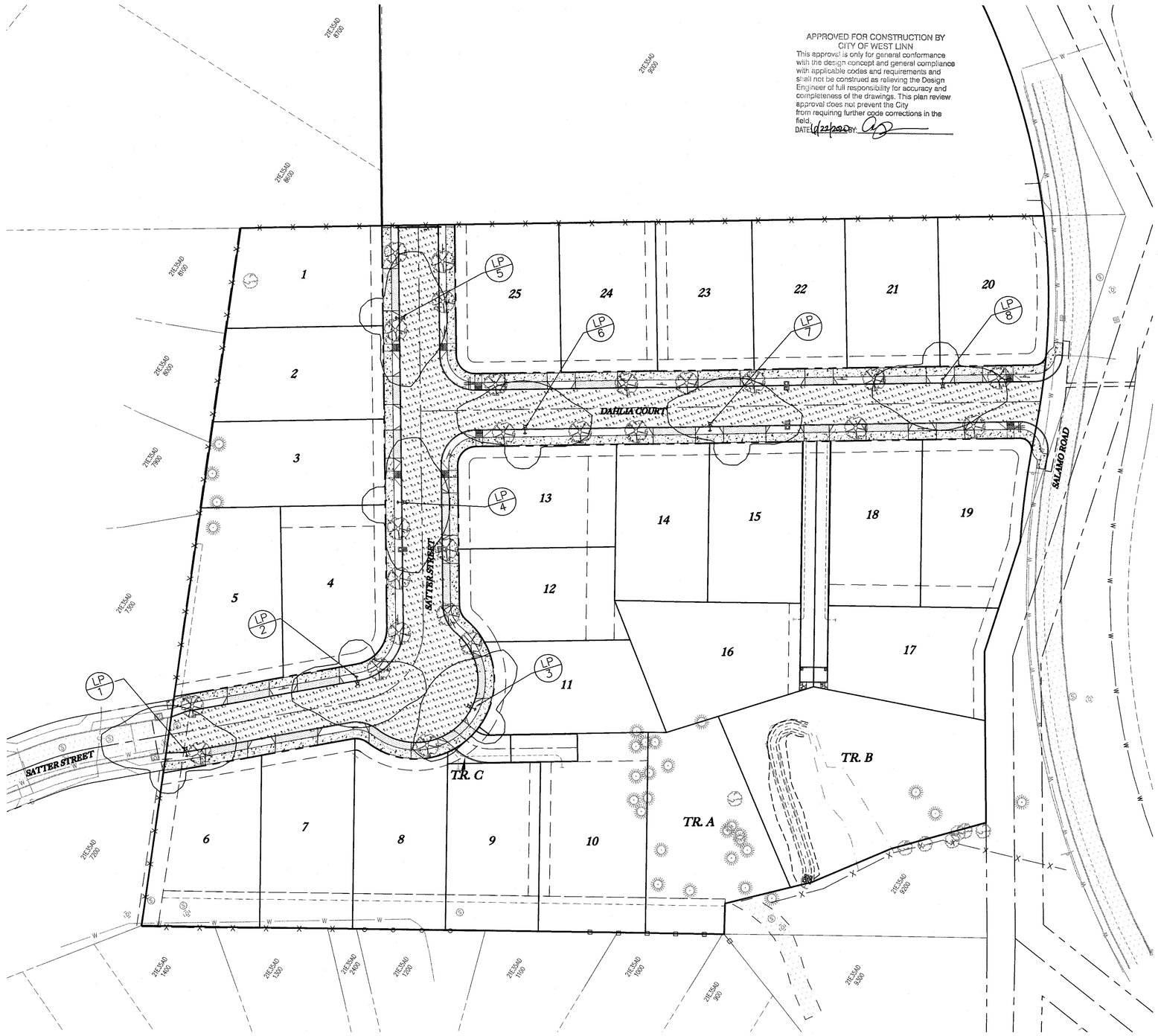

STREETLIGHTING DESIGN
Scale: 1" = 40'

NUMERIC SUMMARY						
PROJECT: BLAND SALAMO						
LABEL	CALC TYPE	UNITS	AVG	MAX	MIN	AVG/MIN
SATTER STREET	ILLUMINANCE	FC	0.42	1.00	0.10	4.20

Northstar Electrical Contractors
11055 S.W. Clay Street
Sherwood, Oregon 97140
Phone 503-612-0840
Fax 503-612-0891
Email adam.suminski@NorthStarElect.com

BLAND SALAMO
WEST LINN, OR

23190 BLAND CIRCLE
SUBDIVISION
TAX MAP 2S1E 35AB
TAX LOT 9100
CITY OF WEST LINN, OREGON

STREET LIGHTING

REV DATE	NO.	REV DESCRIPTION

REVISIONS

NO.	DATE	DESCRIPTION
0	02/19	PLANNING SUBMITTAL
1	08/19	PLANNING RESUBMITTAL
2	10/19	ENGINEERING 1ST SUBMITTAL
3	03/20	ENGINEERING 2ND SUBMITTAL

Title: STREET LIGHTING
Designed by: Adam Suminski
Checked by: Jesse Culp
Date: February 11, 2019

DWG. NO
EL1

EMERIO Design
6445 SW FALLBROOK PLACE, SUITE 100
BEAVERTON, OREGON 97008
TEL: (503) 746-8812
FAX: (503) 639-9592
www.emeriodesign.com

SHEET 24 OF 31

FILE:P:\0542-001 23190 S Bland Circle\dwg\civ\Engineering Set\0542-001_24light, Layout: 24 LIGHTING PLAN, Plot Date: 6/19/2020 9:04 AM, by: Josh Ayers

DocuSign Envelope ID: CFBE966A-192B-4378-9E32-B4C08CAC394B

PLANTING NOTES:

1. SEE SHEET 11 FOR WATER QUALITY FACILITY PLANTING PLAN.
2. CONTRACTOR TO COORDINATE WITH CITY OF WEST LINN ARBORIST BEFORE PLANTING TO DETERMINE EXACT SPECIES AND LOCATION OF STREET TREES.
3. CONTRACTOR TO VERIFY LOCATION OF EXISTING TREES INDICATED TO REMAIN PRIOR TO SOIL PREPARATION. PROTECT ALL TREES AND SHRUBS INDICATED TO REMAIN. COORDINATE WITH THE OWNER'S REPRESENTATIVE.
4. PLANTING AREAS TO BE SUFFICIENTLY CLEANED OF ALL CONSTRUCTION MATERIALS, INCLUDING IMPORTED ROCK, TO THE SATISFACTION OF THE OWNER'S REPRESENTATIVE BEFORE BEGINNING ANY LANDSCAPE WORK.
5. IDENTIFY ALL PLANTING AREAS IN FIELD WITH WHITE FIELD-MARKING CHALK OR APPROVED EQUAL. PLANTING BEDS TO BE ADJUSTED AND APPROVED BY OWNER'S REPRESENTATIVE PRIOR TO PLANT LOCATION.
6. FOR PLANTING OCCURRING IN MASSES OF SAME SPECIES PLANT, LABELING REFERS TO ALL ADJACENT IDENTICAL SYMBOLS. REFER TO DETAILS AND LEGEND FOR SPACING INFORMATION.
7. THE OWNER'S REPRESENTATIVE WILL APPROVE INDIVIDUAL PLANT MATERIAL AND LOCATION OF PLANT MATERIAL PRIOR TO INSTALLATION. REFER TO SPECIFICATIONS FOR PROCEDURE.
8. SHRUBS AND GROUNDCOVER TO BE PLANTED A MINIMUM OF ONE HALF THEIR ON CENTER SPACING AWAY FROM PAVEMENT EDGES; UNLESS OTHERWISE NOTED.
9. PROVIDE ROOT BARRIER AROUND ALL TREES WITHIN 5' OF PAVING, CURBS, WALLS, BUILDINGS, UTILITY DUCTS, AND OTHER APPURTENANCES.
10. PLANT QUANTITIES INDICATED ARE FOR THE CONVENIENCE OF THE CONTRACTOR ONLY. CONTRACTOR IS RESPONSIBLE FOR PROVIDING PLANTS IN QUANTITIES AND LOCATIONS SHOWN ON DRAWINGS.

PROPOSED SIGNS

INSTALL BY CITY FORCES.

TYPE D3-1 Satter Dr [6"] 1 – PROPOSED (1)	TYPE D3-1 Dahlia Ct [6"] 2 – PROPOSED (2)
TYPE D3-1 Salamo Rd [9"] 1 – PROPOSED (3)	RELOCATE EXISTING SPEED LIMIT SIGN 35' SOUTH WHERE SHOWN 1 – EXISTING (4)
TYPE R STOP 30" x 30" 2 – PROPOSED (5)	ONLY R3-5R 1 – PROPOSED (6)

PLANT LEGEND:

SYMBOL	BOTANICAL/COMMON NAME	SIZE	QUANTITY
TREES			
	GINKGO BILOBA 'PRINCETON SENTRY' / PRINCETON SENTRY GINKGO	2" CAL	28

APPROVED FOR CONSTRUCTION BY
CITY OF WEST LINN
This approval is only for general conformance with the design concept and general compliance with applicable codes and requirements and shall not be construed as relieving the Design Engineer of full responsibility for accuracy and completeness of the drawings. This plan review approval does not prevent the City from requiring further code corrections in the field.
DATE: 12/22/2020 BY:

N

40' 0 20' 40' 80'
SCALE: 1" = 40'

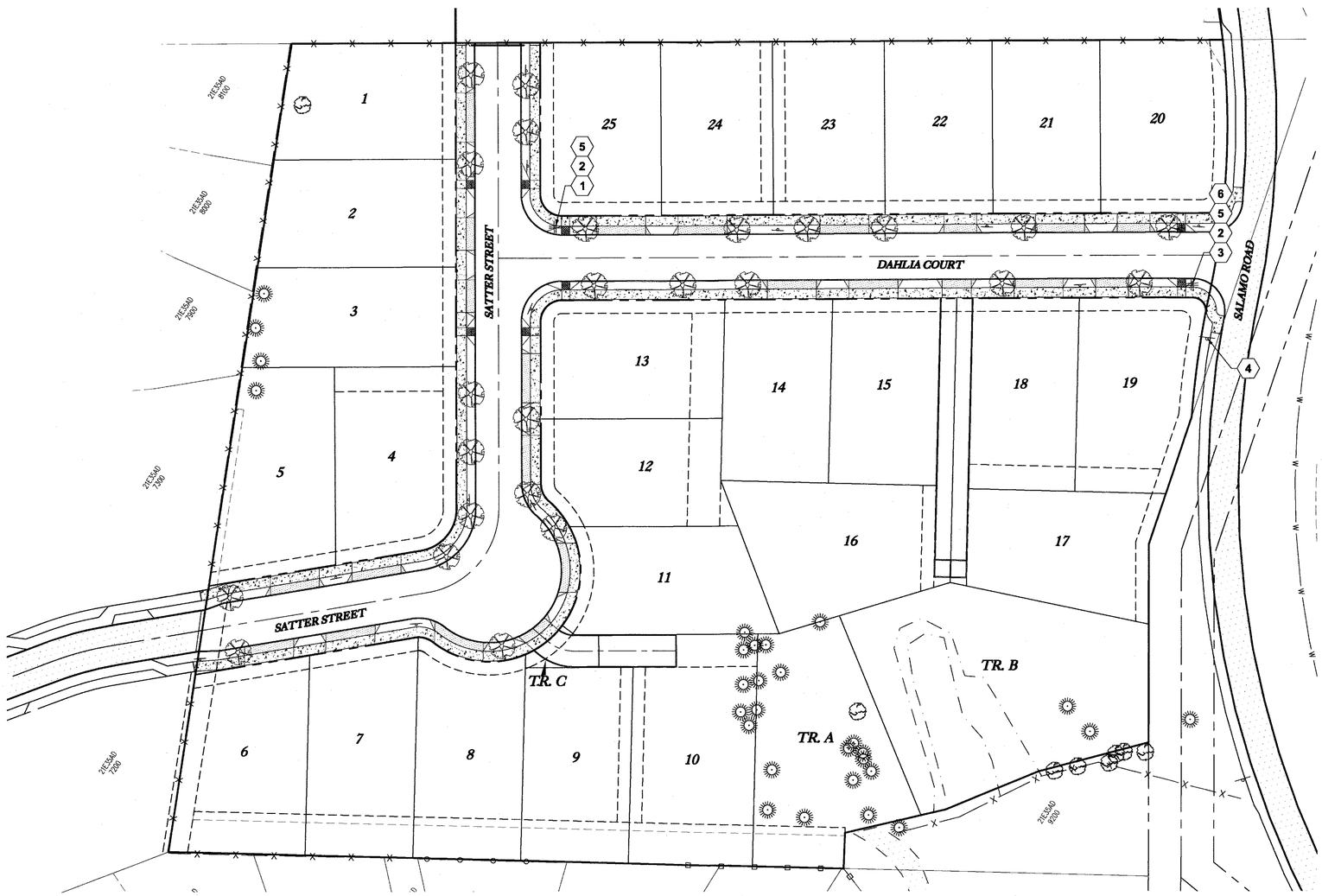

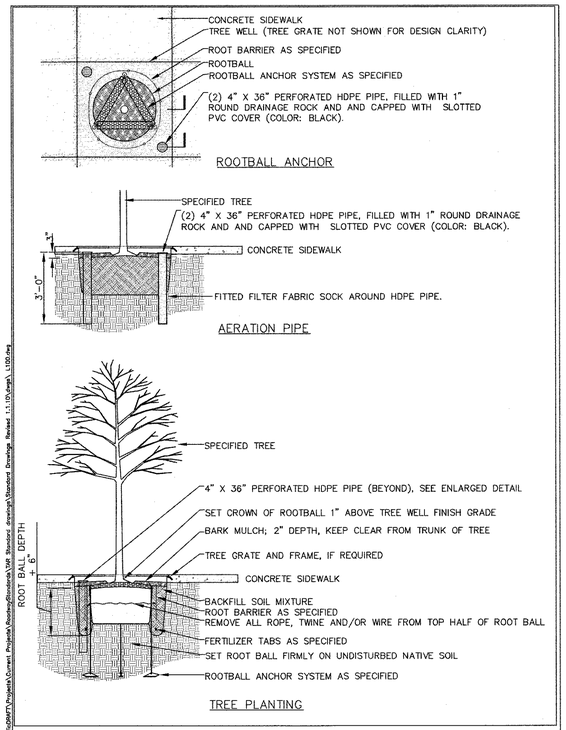

REVISION	DATE	BY

DEPARTMENT OF TRANSPORTATION AND DEVELOPMENT
150 BEAVERCREEK ROAD
OREGON CITY, OR 97045

CLACKAMAS COUNTY

APPROVAL DATE: 1/1/10 SCALE: N.T.S.

TREE PLANTING DETAILS

STANDARD DRAWING L100

23190 BLAND CIRCLE SUBDIVISION
TAX MAP 2S1E 35AB
TAX LOT 9100
CITY OF WEST LINN, OREGON

STREET TREE & SIGNAGE PLAN

REVISIONS

NO.	DATE	DESCRIPTION
0	02/19	PLANNING SUBMITTAL
1	08/19	PLANNING RESUBMITTAL
2	10/19	ENGINEERING 1ST SUBMITTAL
3	03/20	ENGINEERING 2ND SUBMITTAL

EMERIO Design
6445 SW FALLBROOK PLACE, SUITE 100
BEAVERTON, OREGON 97008
TEL: (503) 746-8812
FAX: (503) 639-9592
www.emeriodesign.com

REGISTERED PROFESSIONAL ENGINEER 54565 Docusigned by: Eric D. Evans 2B947AD96CA245F... JULY 11, 2020 ERIC DANIEL EVANS
EXPIRES: 12/31/2021

SHEET 25 OF 31

FILE:P:\0542-001 23190 S Bland Circle\dwg\civil\Engineering Set\0542-001_25stree, Layout: STREET TREE & SIGNAGE PLAN, Plot Date: 5/22/2020 3:38 PM, by: Josh Ayers

DocuSign Envelope ID: CFBE966A-192B-4378-9E32-B4C08CAC394B

MATERIALS:

1. HYDRANT – MUELLER SUPER CENTURION MODEL A423 OR CLOW MEDALLION F2545 (OR APPROVED EQUAL). COLOR SHALL BE SAFETY YELLOW.
2. STORZ ADAPTER – REMOVE SAFETY CHAINS AND INSTALL 5X4.5 NFT STORZ ADT WITH CAP
3. VALVE – 6" MUELLER RESILIENT WEDGE GATE VALVE MODEL A-2361-19 (OR APPROVED EQUAL)
4. VALVE BOX – 18" TALL CAST IRON VALVE BOX WITH "W" COVER AND PVC EXTENSION, PER ODOT RD258.

NOTES:

1. ALL JOINTS SHALL BE RESTRAINED WITH MEGALUG MECHANICAL JOINT RESTRAINTS OR APPROVED EQUAL.
2. HYDRANT DRAIN OUTLETS SHALL REMAIN OPEN AND OPERATIONAL. PLACE CLEAN, 1 1/2" – 3/4" DRAIN ROCK AROUND SHOE TO AT LEAST 6" ABOVE DRAIN OUTLETS.
3. HYDRANTS SHALL BE PLACED ACCORDING TO THE FOLLOWING STANDARDS:
   - 3.1. WHERE A PLANTER STRIP EXISTS BETWEEN THE CURB AND SIDEWALK, A HYDRANT SHALL BE PLACED WITHIN THE PLANTER STRIP SO THAT THE FRONT PORT IS 24" BEHIND THE FACE OF THE CURB.
   - 3.2. WHERE THE SIDEWALK IS ADJACENT TO THE CURB, A HYDRANT SHALL BE PLACED BEHIND THE SIDEWALK.
   - 3.3. WHERE CURB AND SIDEWALK DO NOT EXIST, A HYDRANT SHALL BE PLACED ACCORDING TO THE DIRECTION OF CITY STAFF.
4. CONCRETE HYDRANT PADS ARE OPTIONAL AND SHALL BE INSTALLED AT THE DIRECTION OF CITY STAFF. ALL FITTINGS THAT CONTACT CONCRETE SHALL BE WRAPPED IN PLASTIC.
5. PROVIDE 2" TO 6" OF CLEARANCE BETWEEN THE TOP OF THE HYDRANT PAD OR GROUND SURFACE AND THE BOTTOM OF THE FLANGED BOLT PATTERN OF THE HYDRANT.
6. A 3-FOOT MINIMUM CLEAR ZONE SHALL BE MAINTAINED AROUND ALL HYDRANTS. NO TREES, POLES, OR FURNITURE ARE ALLOWED WITHIN THIS ZONE.

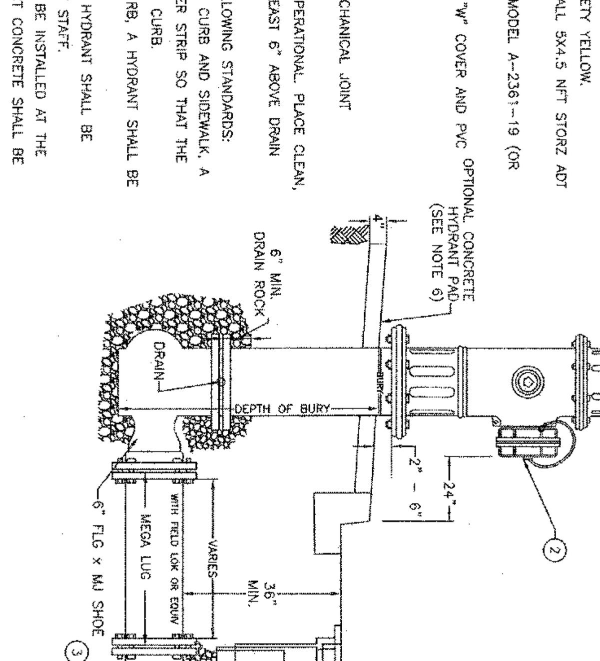

The selection and use of this Standard Drawing, while designed in accordance with generally accepted engineering principles and practices, is the sole responsibility of the user and should not be used without consulting a Registered Professional Engineer.	NOTE: All material and workmanship shall be in accordance with the City of West Linn Standard Construction Specifications.	City of West Linn PUBLIC WORKS DEPARTMENT – STANDARD DRAWINGS 22500 Salamo Road, West Linn OR 97068 Phone:503-722-5500 www.westlinnoregon.gov	Title: FIRE HYDRANT Approved: City Engineer	Standard Drawing No. WL-RD254 Effective Date: 08/01/19

File WL-RD254.dwg

MATERIALS:

1. METER BOX: DFW PLASTICS MODEL DFW486WBC4, OR APPROVED EQUAL
2. CORPORATION STOP: MUELLER 1" B-25008 300 PSI BALL TYPE CORP, OR APPROVED EQUAL
3. COPPER TUBING: 1" SEAMLESS SOFT TEMPER, TYPE "K", COMPLYING WITH ASTM B-88
4. ANGLE STOP: MUELLER 1" B-24258 FULL PORT 300 PSI BALL VALVE NO LEAD ANGLE STOP, OR APPROVED EQUAL

NOTE:

1. MACHINE DRILL OR TAP, HAND DRILLING IS NOT ALLOWED.
2. BACKFILL WITHIN PIPE AND STRUCTURE ZONE WITH 3/4" – 0" AGGREGATE BASE. COMPACT TO 95% MAX DENSITY AS DETERMINED BY AASHTO T-180.
3. WHEN AN ACTIVE CATHODIC PROTECTED SYSTEM IS ENCOUNTERED, SCH. 40 PVC SHALL BE INSTALLED AS SHOWN WITH CLAY PLUG.
4. METER BOX SHALL BE CENTERED OVER THE COMPLETED METER ASSEMBLY.
5. SERVICE TAPS INTO MAIN SHOULD HAVE 18" MIN. SEPARATION ON CENTER.
6. ANGLE METER STOPS SHALL BE 18" FROM ALL PROPERTY LINES AND NOT WITHIN A DRIVEWAY APPROACH.
7. METERS SHALL BE LOCATED BEHIND SIDEWALKS OR PLACED IN PLANTER STRIPS. BOXES THAT HAVE TO BE PLACED IN SIDEWALKS NEED TO BE APPROVED BY THE CITY ENGINEER.

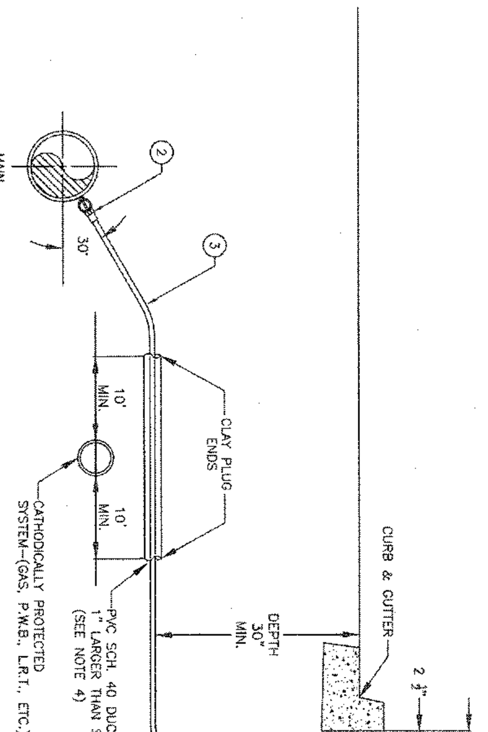

The selection and use of this Standard Drawing, while designed in accordance with generally accepted engineering principles and practices, is the sole responsibility of the user and should not be used without consulting a Registered Professional Engineer.	NOTE: All material and workmanship shall be in accordance with the City of West Linn Standard Construction Specifications.	City of West Linn PUBLIC WORKS DEPARTMENT – STANDARD DRAWINGS 22500 Salamo Road, West Linn OR 97068 Phone:503-722-5500 www.westlinnoregon.gov	Title: 1-INCH WATER SERVICE Approved: City Engineer	Standard Drawing No. WL-RD274 Effective Date: 08/01/19

File WL-RD274.dwg

GENERAL NOTES FOR ALL DETAILS:

1. Air release/air vacuum valve shall be size specified in Contract. Piping and valves to be same size as combination air release/air vacuum valve.
2. Locate at high point of main.
3. Tap top of main.
4. Provide insulation and additional depth when specified for freeze protection.
5. See project plans for details not shown.

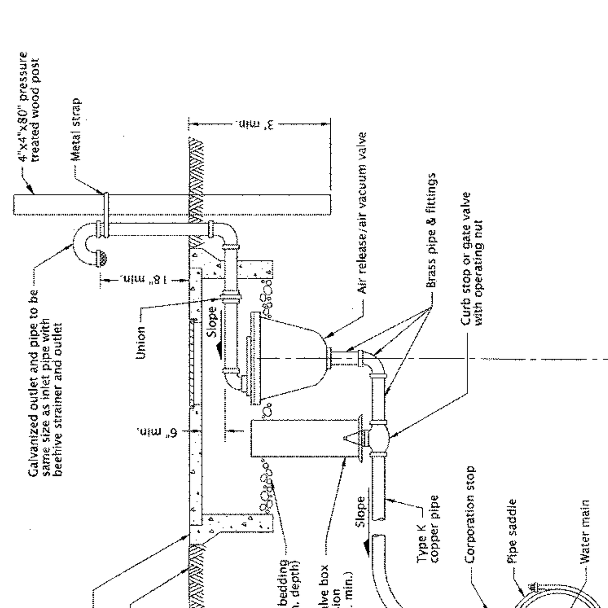

CALC. BOOK NO. N/A — BASELINE REPORT DATE 25-JUL-2017

NOTE: All material and workmanship shall be in accordance with the current Oregon Standard Specifications.

The selection and use of this Standard Drawing, while designed in accordance with generally accepted engineering principles and practices, is the sole responsibility of the user and should not be used without consulting a Registered Professional Engineer.

OREGON STANDARD DRAWINGS

COMBINATION AIR RELEASE AIR VACUUM VALVE ASSEMBLY (2" AND SMALLER)

2018

Effective Date: December 1, 2019 – May 31, 2020

RD270

rd270.dgn 25-JUL-2017

THIS DETAIL DRAWING SHALL NOT BE ALTERED OR CHANGED IN ANY MANNER EXCEPT BY THE CITY ENGINEER. IT IS THE RESPONSIBILITY OF THE USER TO ACQUIRE THE MOST CURRENT VERSION OF THE DETAIL.

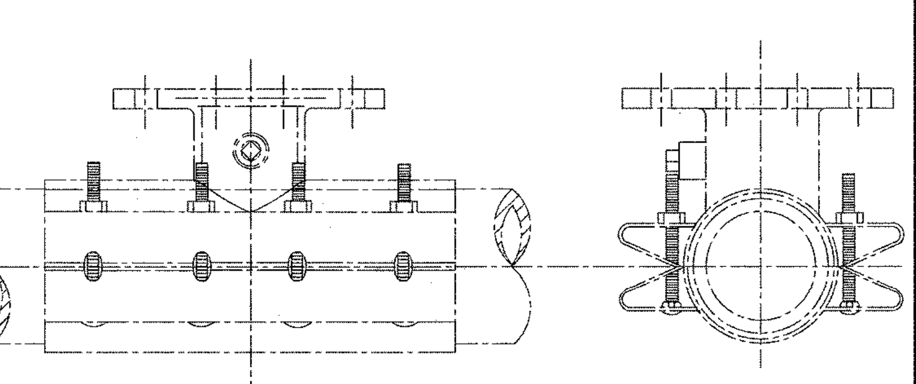

FRONT VIEW

SIDE VIEW

NOTE:

1. WATER MAIN SHALL BE CLEANED BEFORE ATTACHING SLEEVE.
2. SLEEVE AND VALVE SHALL BE PRESSURE TESTED BEFORE MAKING TAP.
3. PRESSURE TEST AND TAP SHALL BE MADE IN THE PRESENCE OF AN AUTHORIZED CITY REPRESENTATIVE.
4. PROPER TAPPING MACHINE SHALL BE USED TO MAKE TAP.
5. THRUST BLOCKING REQUIREMENTS SHALL BE DETERMINED BY THE ENGINEER OR PER DWG. WL-406.
6. TAP SHALL BE MADE NO CLOSER THAN 18 INCHES FROM THE NEAREST JOINT OR TAP.
7. SLEEVE AND VALVE SHALL BE WRAPPED WITH 8 MIL PLASTIC.
8. SLEEVES TO BE USED ARE JCM OR MUELLER STAINLESS STEEL TAPPING SLEEVES. ALL NUTS AND BOLTS SHALL BE STAINLESS STEEL.
9. SLEEVE SHALL BE AS LEVEL AS POSSIBLE.
10. ALL BOLTS SHALL HAVE NEVER SIEZE ON THREADS.

STANDARD WET TAP

City of West Linn — DATE: 2010 — DRAWING NO. WL-410 — FILE NO.

APPROVED FOR CONSTRUCTION BY CITY OF WEST LINN
This approval is only for general conformance with the design concept and general compliance with applicable codes and requirements and shall not be construed as relieving the Design Engineer of full responsibility for accuracy and completeness of the drawings. This plan review approval does not prevent the City from requiring further code corrections in the field.
DATE: 6/22/2020 BY:

MATERIALS:

1. SAMPLING STATION – ECLIPSE NO. 88, BY THE KUPFERLE FOUNDRY CO. (OR EQUAL) WITH ¾" BALL VALVE IN PLACE OF ¾" P.E.T. COCK ON VENT, OR APPROVED EQUAL.
2. BRASS STANDPIPE
3. ¾" COMPRESSION x MIPT 90° ELBOW – MUELLER H-15531, OR APPROVED EQUAL
4. ¾" "K" SOFT COPPER, DOMESTIC
5. ¾" AWWA x COMPRESSION CORPORATION STOP MUELLER H-25008, OR APPROVED EQUAL
6. 3/4 FULL PORT BALL STRAIGHT SERVICE VALVE WITH COMPRESSION ENDS MUELLER B-25209, OR APPROVED EQUAL.
7. 6" ASTM 3034 PVC PIPE
8. CAST IRON VALVE BOX, LID AND EXTENSION 910-C STYLE, OR APPROVED EQUAL. PER ODOT RD258.
9. 4" THICK CONCRETE SLAB SURROUNDING SAMPLING STATION

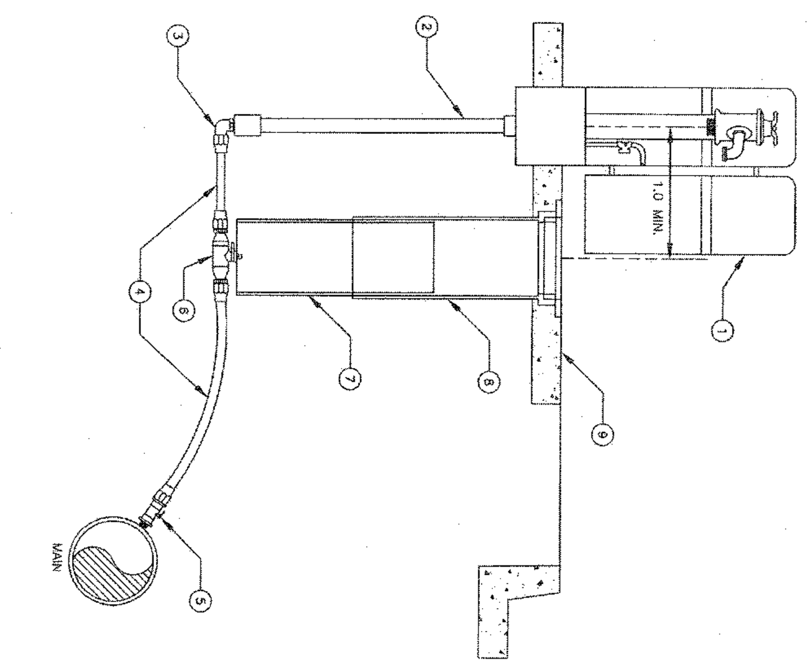

The selection and use of this Standard Drawing, while designed in accordance with generally accepted engineering principles and practices, is the sole responsibility of the user and should not be used without consulting a Registered Professional Engineer.	NOTE: All material and workmanship shall be in accordance with the City of West Linn Standard Construction Specifications.	City of West Linn PUBLIC WORKS DEPARTMENT – STANDARD DRAWINGS 22500 Salamo Road, West Linn OR 97068 Phone:503-722-5500 www.westlinnoregon.gov	Title: SAMPLING STATION Approved: City Engineer	Standard Drawing No. WL-RD282 Effective Date: 08/01/19

File WL-RD282.dwg

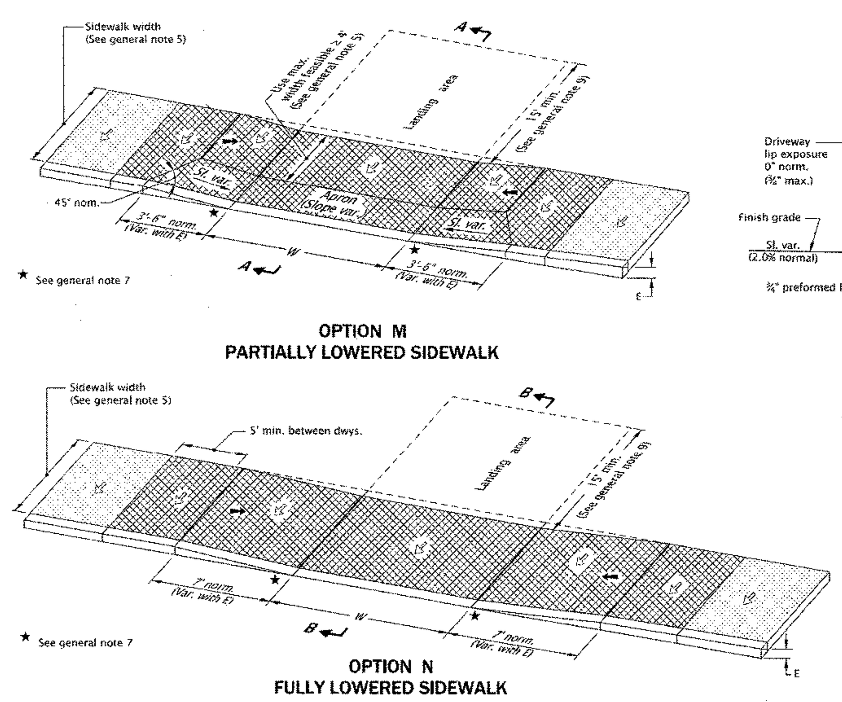

OPTION M
PARTIALLY LOWERED SIDEWALK

OPTION N
FULLY LOWERED SIDEWALK

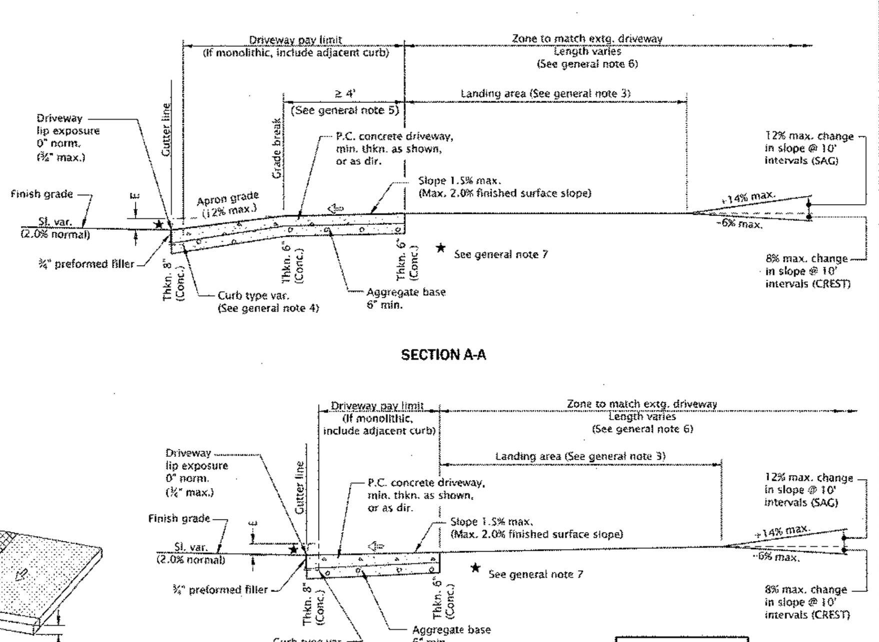

SECTION A-A

SECTION B-B

NOTE: This drawing is to be used by local agencies to assist them in the design of driveways on their facilities.

GENERAL NOTES FOR ALL DETAILS ON THIS SHEET:

1. Details are based on ODOT applicable standards.
2. Only use details allowed by jurisdiction.
3. The following dimensions are as shown on plans, or as directed: driveway width, driveway slope, sidewalk width, curb exposure, driveway lip exposure, landing area length and width. See project plans for details not shown.
4. Curb, gutter, and sidewalk types varies, see plans. See Std. Dwgs. RD700 & RD701 for curb details. See Std. Dwg. RD720 for sidewalk details. See Std. Dwg. RD722 for joint details.
5. A greater than or equal 4' unobstructed clear passage with cross slope 1.5% max. (Max. 2.0% finished surface slope) is required behind driveway apron.
6. Where existing driveway is in good condition, and meets slope requirements, construct only as much as required for satisfactory connection with new work.
7. Check the gutter flow depth at driveway locations to assure that the design flood does not overtop the back of sidewalk at driveway. If overtopping occurs place an inlet at upstream side of driveway or perform other approved design mitigation.
8. Construct a full deph expansion joints with 1#2" (In) preformed joint filler at ends of each driveway. Tooled joints are required at all driveway slope break lines.
9. 15' min. of the driveway behind the sidewalk should be surfaced to prevent tracking of gravel onto the sidewalk.
10. Monolithic curb & sidewalk shall retain thickened edge through lowered profile, to accommodate driveway use. See Std. Dwg. RD720 for details.
11. Any dimensions except those of general note 5 may be amended by local agencies for their use.

LEGEND:
- Sidewalk
- Driveway pay limit (If monolithic, include adjacent curb) (See project plans for details not shown)
- Slope 1.5% max. (Max. 2.0% finished surface slope) (Normal sidewalk cross slope)
- Slope 7.5% max. (Max. 8.3% finished surface slope)
- W Width of driveway
- E Curb exposure

CALC. BOOK NO. N/A — BASELINE REPORT DATE 21-JUN-2019

NOTE: All material and workmanship shall be in accordance with the current Oregon Standard Specifications.

The selection and use of this Standard Drawing, while designed in accordance with generally accepted engineering principles and practices, is the sole responsibility of the user and should not be used without consulting a Registered Professional Engineer.

OREGON STANDARD DRAWINGS

CURB LINE SIDEWALK DRIVEWAYS OR ALLEYS (OPTIONS M & N) LOCAL JURISDICTIONS

2018

DATE	REVISION DESCRIPTION
01-2016	REVISED & ADDED NOTES
07-2016	REVISED NOTE
01-2019	REVISED DETAILS & NOTES
06-2019	REVISED DETAILS & NOTES

Effective Date: December 1, 2019 – May 31, 2020

RD750

rd750.dgn 21-JUN-2019

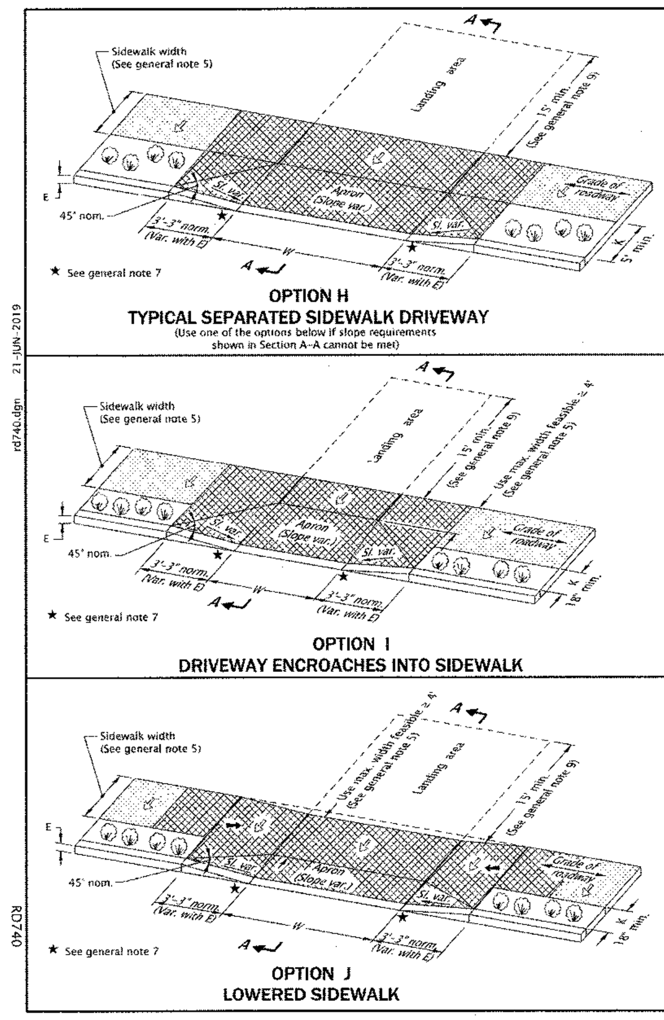

OPTION H
TYPICAL SEPARATED SIDEWALK DRIVEWAY
(Use one of the options below if slope requirements shown in Section A-A cannot be met)

OPTION I
DRIVEWAY ENCROACHES INTO SIDEWALK

OPTION J
LOWERED SIDEWALK

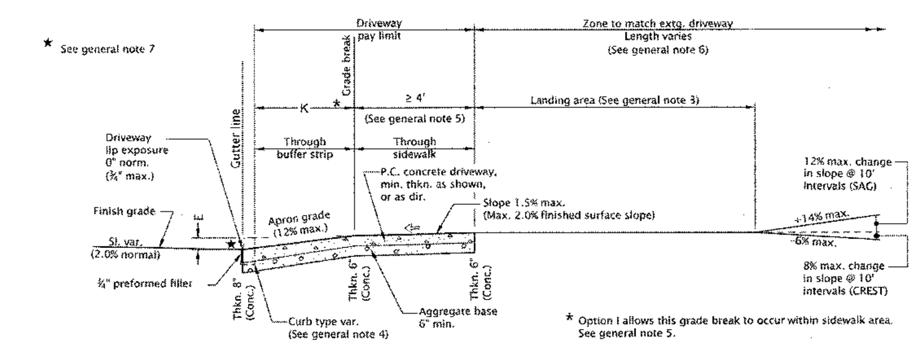

SECTION A-A

GENERAL NOTES FOR ALL DETAILS ON THIS SHEET:

1. Details are based on ODOT applicable standards.
2. Only use details allowed by jurisdiction.
3. The following dimensions are as shown on plans, or as directed: driveway width, driveway slope, sidewalk width, buffer strip width, curb exposure, driveway lip exposure, landing area length and width. See project plans for details not shown.
4. Curb, gutter, and sidewalk types varies, see plans. See Std. Dwgs. RD700 & RD701 for curb details. See Std. Dwg. RD721 for sidewalk details. See Std. Dwg. RD722 for joint details.
5. A greater than or equal 4' unobstructed clear passage with cross slope 1.5% max. (Max. 2.0% finished surface slope) is required behind driveway apron.
6. Where existing driveway is in good condition, and meets slope requirements, construct only as much as required for satisfactory connection with new work.
7. Check the gutter flow depth at driveway locations to assure that the design flood does not overtop the back of sidewalk at driveway. If overtopping occurs place an inlet at upstream side of driveway or perform other approved design mitigation.
8. Construct a full deph expansion joints with 1#2" (In) preformed joint filler at ends of each driveway. Tooled joints are required at all driveway slope break lines.
9. 15' min. of the driveway behind the sidewalk should be surfaced to prevent tracking of gravel onto the sidewalk.
10. Any dimensions except those of general note 5 may be amended by local agencies for their use.

LEGEND:
- Sidewalk
- Driveway pay limit (See project plans for details not shown)
- Slope 1.5% max. (Max. 2.0% finished surface slope) (Normal sidewalk cross slope)
- Slope 7.5% max. (Max. 8.3% finished surface slope)
- W Width of driveway
- K Buffer strip width
- E Curb exposure

NOTE: This drawing is to be used by local agencies to assist them in the design of driveways on their facilities.

CALC. BOOK NO. N/A — BASELINE REPORT DATE 21-JUN-2019

NOTE: All material and workmanship shall be in accordance with the current Oregon Standard Specifications.

The selection and use of this Standard Drawing, while designed in accordance with generally accepted engineering principles and practices, is the sole responsibility of the user and should not be used without consulting a Registered Professional Engineer.

OREGON STANDARD DRAWINGS

SEPARATED SIDEWALK DRIVEWAYS OR ALLEYS (OPTIONS H, I & J) LOCAL JURISDICTIONS

2018

DATE	REVISION DESCRIPTION
01-2016	REVISED & ADDED NOTES
07-2016	REVISED NOTE
01-2019	REVISED DETAILS & NOTES
06-2019	REVISED DETAILS & NOTES

Effective Date: December 1, 2019 – May 31, 2020

RD740

rd740.dgn 21-JUN-2019

23190 BLAND CIRCLE SUBDIVISION
TAX MAP 2S1E 35AB TAX LOT 9100
CITY OF WEST LINN, OREGON

WATER & STREET CONSTRUCTION DETAILS

REVISIONS

NO.	DATE	DESCRIPTION
0	02/19	PLANNING SUBMITTAL
1	08/19	PLANNING RESUBMITTAL
2	10/19	ENGINEERING 1ST SUBMITTAL
3	03/20	ENGINEERING 2ND SUBMITTAL

EMERIO Design
6445 SW FALLBROOK PLACE, SUITE 100
BEAVERTON, OREGON 97008
TEL: (503) 746-8812
FAX: (503) 639-9592
www.emeriodesign.com

REGISTERED PROFESSIONAL ENGINEER 54665 — DocuSigned by: Eric D. Evans 936474C69EA2449 — OREGON JULY 11, 2006 — ERIC DANIEL EVANS — EXPIRES: 12/31/2021

SHEET 26 OF 31

FILE: P:\0542-001 23190 S Bland Circle\dwg\civ\Engineering Set\0542-001_26det1, Layout: 26 WATER & STREET CONSTRUCTION DETAILS, Plot Date: 5/22/2020 3:38 PM, by: Josh Ayers

DocuSign Envelope ID: CFBE966A-192B-4378-9E32-B4C08CAC394B

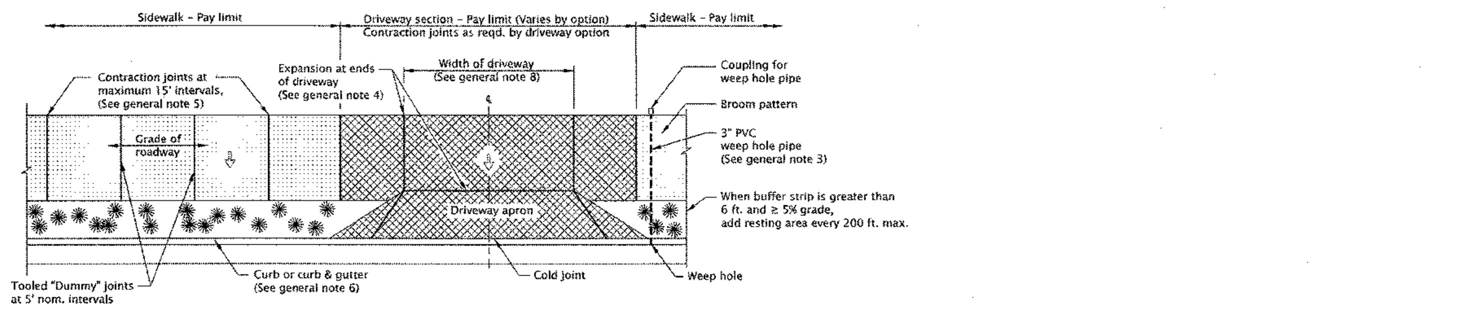

TYPICAL PLAN VIEW - SEPARATED SIDEWALK

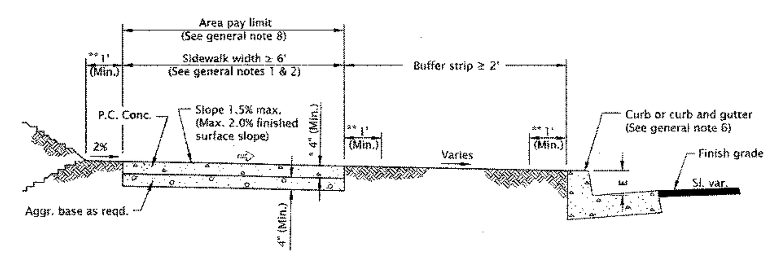

TYPICAL SETBACK SIDEWALK CROSS SECTION

E = curb exposure, see general note 6

* Min. 4" or as specified in plans. A thickness 6" if sidewalk is intended as portion of a driveway or mountable curb is used.

** Provide compacted backfill adjacent to curb and sidewalk

LEGEND

Sidewalk pay limit.

Driveway pay limit, varies by option, (See general note 8).

Slope 1.5% max. (Max. 2.0% finished surface slope)

GENERAL NOTES FOR ALL DETAILS ON THIS SHEET:

1. Include additional paved or unpaved 2' shy distance to vertical faces higher than 5' such as retaining walls, sound walls, fences and buildings.
2. Curb type and sidewalk width as shown on plans or as directed. On sidewalks 8' and wider, provide a longitudinal joint at the midpoint.
3. Install 3" pvc weep hole pipes in sidewalks where shown on plans, and allowed by jurisdiction. Place contraction joint over top of pipe. See Std. Dwg. RD700 for weep hole details.
4. Provide expansion joints around poles, posts, boxes, at ends of each driveway, and other fixtures which protrude through or against the structures. For sidewalk, monolithic curb & sidewalk, const. expansion joints at 45' maximum spacing. See Std. Dwg. RD722 for expansion joint details.
5. Const. contraction joints at 15' maximum spacing, and at ends of each curb ramp. See Std. Dwg. RD722 for contraction joint details.
6. Curb and gutter shown; see project plans for the curb design specified. For curb details, see Std. Dwgs. RD700 & RD701. ODOT standard E=7".
7. Sidewalk details are based on ODOT applicable standards.
8. Driveway encroaches into sidewalk shown; see project plans for the driveway design specified. For driveway details not shown, see Std. Dwgs. RD725, RD730, RD735, RD740, RD745 & RD750.
9. See project plans for details not shown.

CALC. BOOK NO. N/A — BASELINE REPORT DATE 21-JUN-2019

NOTE: All material and workmanship shall be in accordance with the current Oregon Standard Specifications

The selection and use of this Standard Drawing, while designed in accordance with generally accepted engineering principles and practices, is the sole responsibility of the user and should not be used without consulting a Registered Professional Engineer.

OREGON STANDARD DRAWINGS

SEPARATED SIDEWALKS

2018

DATE	REVISION DESCRIPTION
01-2019	DRAWING CREATED
06-2019	ADDED NOTES

Effective Date: December 1, 2019 - May 31, 2020 — RD721 — rd721.dgn 21-JUN-2019

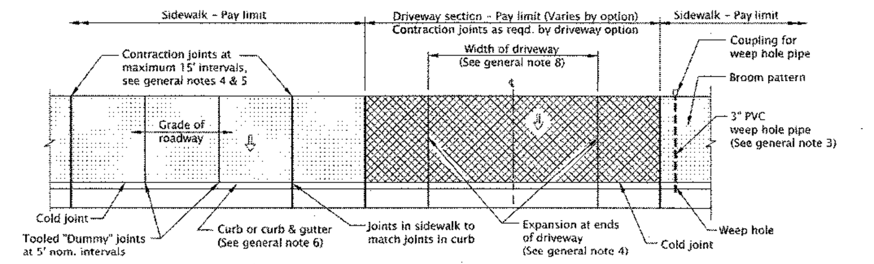

TYPICAL PLAN VIEW - CURB LINE SIDEWALK

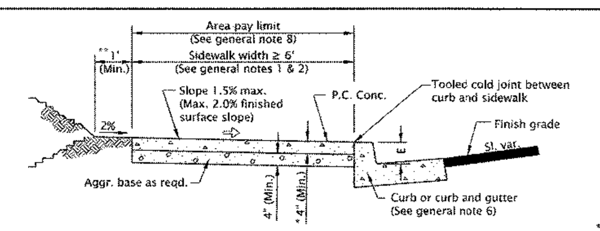

TYPICAL CURB SIDEWALK CROSS SECTION

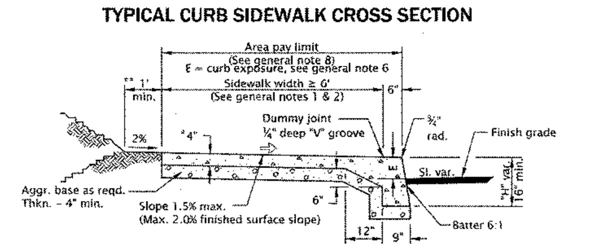

TYPICAL MONOLITHIC CURB & SIDEWALK CROSS SECTION

E = curb exposure, see general note 6

* Min. 4" or as specified in plans. A thickness ≥ 6" if sidewalk is intended as portion of a driveway or mountable curb is used.

** Provide compacted backfill adjacent to curb and sidewalk

*** Objects with base below 2'-3" may protrude any distance as long as the 5' circulation path is maintained. When an object with a base higher than 2'-3" protrudes further than 4" provide a detection below protrusion to delineate edge.

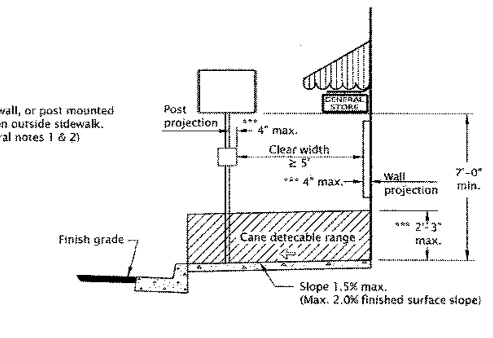

CLEAR CIRCULATION PATH

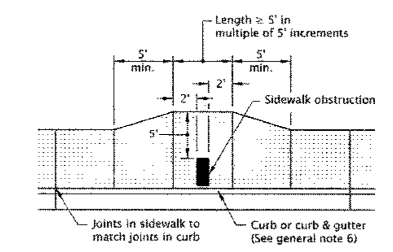

REQUIRED SIDEWALK WIDENING AROUND OBSTRUCTIONS

GENERAL NOTES FOR ALL DETAILS ON THIS SHEET:

1. Include additional paved or unpaved 2' shy distance to vertical faces higher than 5' such as retaining walls, sound walls, fences and buildings.
2. Curb type and sidewalk width as shown on plans or as directed. On sidewalks 8' and wider, provide a longitudinal joint at the midpoint.
3. Install 3" pvc weep hole pipes in sidewalks where shown on plans, and allowed by jurisdiction. Place contraction joint over top of pipe. See Std. Dwg. RD700 for weep hole details.
4. Provide expansion joints around poles, posts, boxes, at ends of each driveway, and other fixtures which protrude through or against the structures. For sidewalk, monolithic curb & sidewalk, const. expansion joints at 45' maximum spacing. See Std. Dwg. RD722 for expansion joints details.
5. Const. contraction joints at 15' maximum spacing, and at ends of each curb ramp. See Std. Dwg. RD722 for contraction joints details.
6. For curb details, see Std. Dwgs. RD700 & RD701. ODOT standard E=7".
7. Sidewalk details are based on ODOT applicable standards.
8. Fully lowered sidewalk shown; see project plans for the diveway design specified. For driveway details not shown, see Std. Dwgs. RD725, RD730, RD735, RD740, RD745 & RD750.
9. See project plans for details not shown.

LEGEND

Sidewalk pay limit.

Driveway pay limit, varies by option, (See general note 8).

Slope 1.5% max. (Max. 2.0% finished surface slope)

CALC. BOOK NO. N/A — BASELINE REPORT DATE 21-JUN-2019

NOTE: All material and workmanship shall be in accordance with the current Oregon Standard Specifications

The selection and use of this Standard Drawing, while designed in accordance with generally accepted engineering principles and practices, is the sole responsibility of the user and should not be used without consulting a Registered Professional Engineer.

OREGON STANDARD DRAWINGS

CURB LINE SIDEWALKS

2018

DATE	REVISION DESCRIPTION
01-2018	REVISED NOTE
07-2018	REVISED DETAIL & NOTES
01-2019	REMOVED, REVISED DETAILS & NOTES
06-2019	ADDED & REVISED NOTES

Effective Date: December 1, 2019 - May 31, 2020 — RD720 — rd720.dgn 21-JUN-2019

THRUST BLOCKING

TABLE A — CONCRETE THRUST BLOCKING (HORIZONTAL)

Thrust (T) at fittings in Pounds

PIPE DIA.	Table Pressure PSI	A: Tee & Dead Ends	B: 90 deg Bend	C: 45 deg Bend	D: 22.5 deg Bend	E: 11.25 deg Bend
4"	250	3035	4320	2315	1215	610
6"	250	6860	9735	5215	2720	1375
8"	250	12185	17310	9265	4835	2430
10"	250	19045	27045	14480	7560	3800
12"	250	27405	38940	20840	10880	5465
14"	250	37320	53010	28370	14815	7445
16"	250	48740	69245	37050	19360	9735

TABLE B

Soil Type	Soil Bearing Capacity (B) in PSF
Muck, peat, etc.	0
Soft Clay	1000
Sand	2000
Sand and gravel	3000
Sand and gravel cemented with clay	4000
Hard shale	10,000

TABLE C — CONCRETE BLOCKING FOR CONVEX VERTICAL BENDS — DIMENSION TABLE

PIPE DIA. in.	Table Pressure PSI	Bend Angle (deg)	Concrete Volume (cy)	Cube Size (ft)	Stirrup Dia. (in)	Stirrup Embmt. (in)	Stirrup Bar #
4"	250	11.25	0.21	1.8	⅝	17	5
		22.5	0.43	2.3			
		45	0.77	2.8			
6"	250	11.25	0.48	2.4	⅝	17	5
		22.5	0.95	3.0			
		45	1.79	3.6			
8"	250	11.25	0.86	2.9	⅝	17	5
		22.5	1.65	3.5			
		45	3.22	4.4			
10"	250	11.25	1.39	3.3	⅝	17	5
		22.5	2.62	4.1			
		45	4.97	4.1			
12"	250	11.25	1.94	3.7	⅝	17	5
		22.5	3.91	4.7			
		45	6.89	5.7	⅞	24	7
14"	250	11.25	2.62	4.1	⅝	17	5
		22.5	5.26	5.2	¾	20	6
		45	9.70	6.4	1	27	8
16"	250	11.25	3.44	4.5	⅝	17	5
		22.5	6.89	5.7	⅞	24	7
		45	12.63	7.0	1⅛	30	9

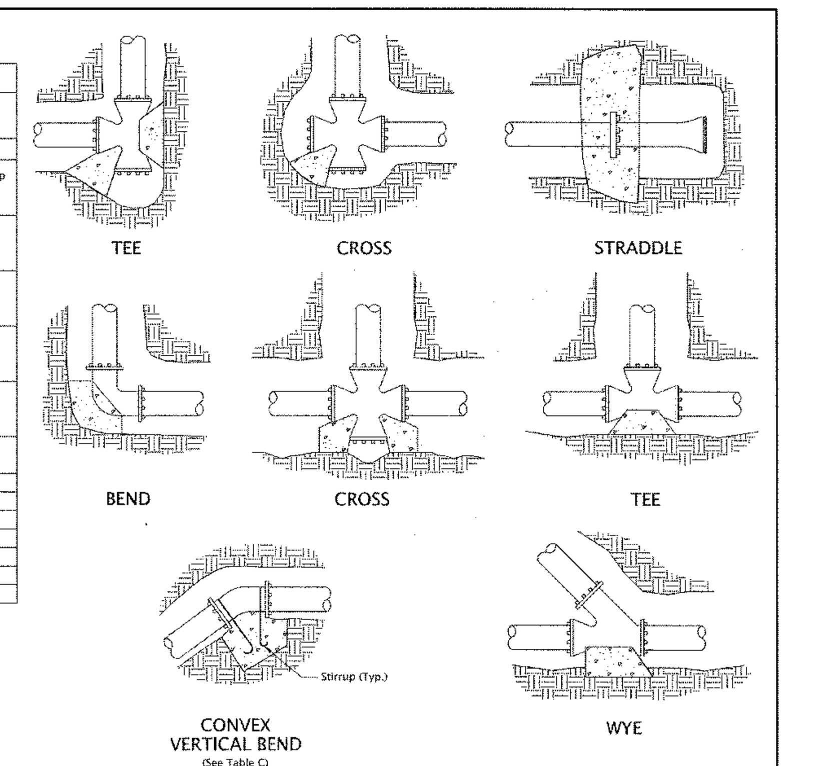

CONVEX VERTICAL BEND (See Table C)

THRUST BLOCK BEARING AREA EQUATION

NOTE: WHEN THRUST BLOCK BEARING AREA IS NOT SPECIFIED ON THE PLANS OR DETERMINED BY THE ENGINEER, USE THE FOLLOWING PROCEDURE TO DETERMINE REQUIRED BEARING AREA.

1. Determine thrust (T) for type of fitting or joint and size of pipe from Table A.
2. Determine Design (Test) Pressure from Standard Specifications or Special Provisions.
3. Determine Table Pressure from Table A.
4. Determine Soil Bearing Capacity (B) of soil from Table B.
5. Determine required bearing area (A) in sq. ft. as follows:

$$\text{Thrust Block Bearing Area} = A = \left(\frac{T}{B}\right)\left(\frac{\text{Design (Test) Pressure}}{\text{Table Pressure}}\right)$$

Example: Design (Test) Pressure = 150 PSI, Pipe = 14", Fitting = Tee, Soil = Sand. From Table A, T = 37320; From Table B, B = 2000

$$A = \left(\frac{37320}{2000}\right)\left(\frac{150}{250}\right) = 11.2 \text{ sq.ft.}$$

GENERAL NOTES FOR ALL DETAILS:

1. Contractor to provide blocking adequate to withstand full test pressure.
2. Pour concrete blocking against undisturbed earth.
3. All concrete shall be commercial grade concrete.
4. Wrap pipe and/or fittings with 2 layers of polyethylene film where in contact with concrete.
5. Keep concrete clear of all joints and accessories.
6. Stirrups shall be deformed galvanized cold rolled steel AASHTO M31 (ASTM A615), Grade 60. Coat with coal tar epoxy after installation.
7. See project plans for details not shown.

CALC. BOOK NO. N/A — BASELINE REPORT DATE 25-JUL-2017

NOTE: All material and workmanship shall be in accordance with the current Oregon Standard Specifications

The selection and use of this Standard Drawing, while designed in accordance with generally accepted engineering principles and practices, is the sole responsibility of the user and should not be used without consulting a Registered Professional Engineer.

OREGON STANDARD DRAWINGS

THRUST BLOCKING

2018

Effective Date: December 1, 2019 - May 31, 2020 — RD250 — rd250.dgn 25-JUL-2017

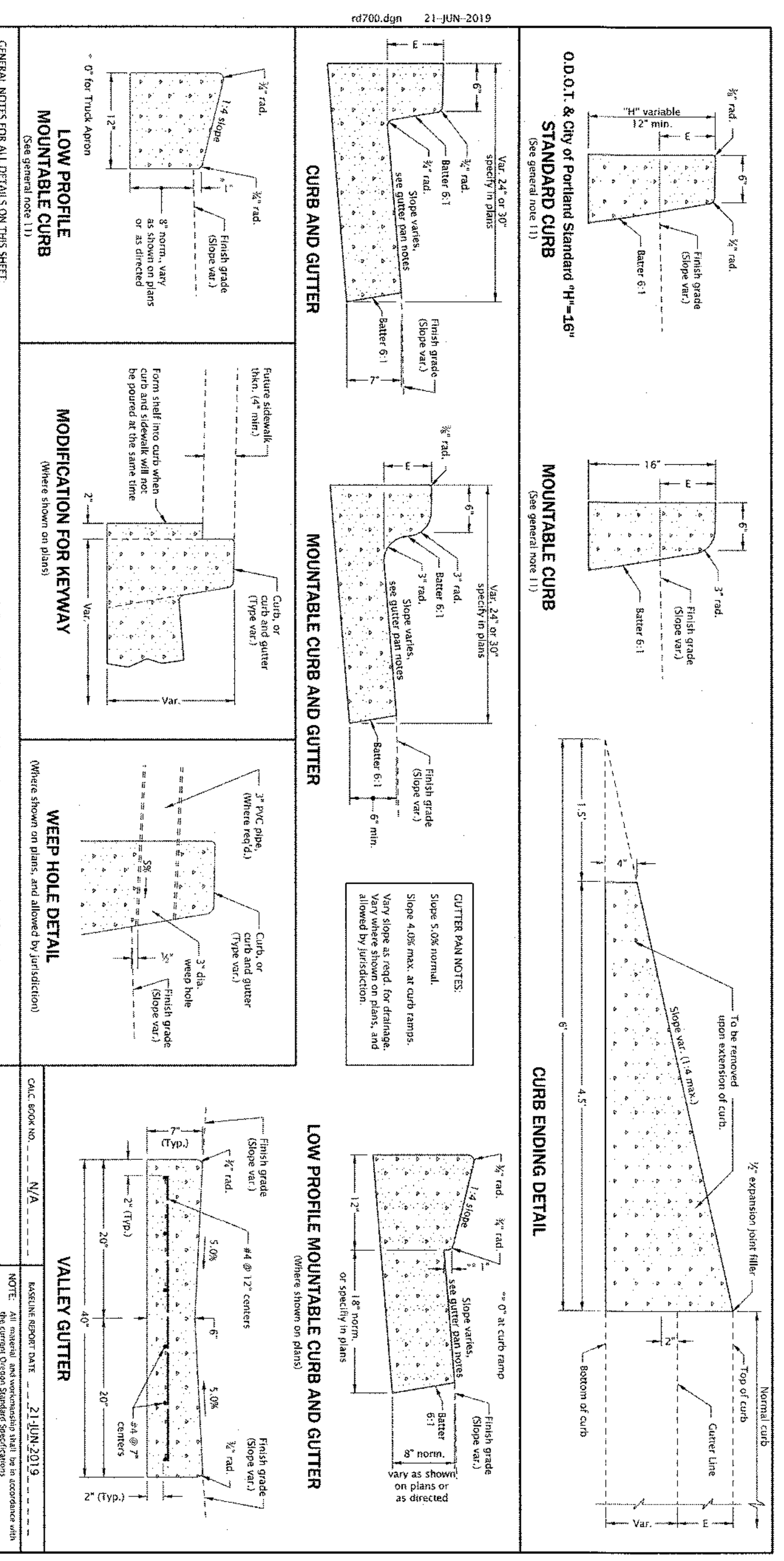

GENERAL NOTES FOR ALL DETAILS ON THIS SHEET:

1. Curb exposure "E" = 6" to 9", as measured vertically from flowline to highest point on curb. Vary as shown on plans or as directed. O.D.O.T standard "E"=7".
2. Const. curb expansion joints at 200' maximum spacing, and at points of tangency, and at ends of each driveway.
3. Const. curb contraction joints at 15' maximum spacing, and at ends of each inlet and curb ramp.
4. Transitions shall be used to connect curbs of different exposures "E". ("E" is the total vertical dimension of those curb surfaces having a slope of 1:1 or steeper). Minimum desirable transition length shall be 20' for each 1" difference in "E".
5. Tops of all curbs shall slope toward the roadway at 1.5% max. (Max. 2.0% finished surface slope), unless otherwise shown, or as directed.
6. Dimensions are nominal, vary to conform with curb machine approved by the engineer.
7. Dimensions adjacent to radii are measured to the point of intersection of curb surfaces.
8. For sidewalk details, and monolithic curb & sidewalk, see Std. Dwgs. RD720 & RD721.
9. For drainage curbs, see Std. Dwg. RD701.
10. For curb ramp details, see Std. Dwg. RD755.
11. On or along state highways, curb and gutter is required at curb ramp.

GUTTER PAN NOTES: Slope 5.0% normal. Slope 4.0% max. at curb ramps. Vary slope as reqd. for drainage. Vary where shown on plans, and allowed by jurisdiction.

CALC. BOOK NO. N/A — BASELINE REPORT DATE 21-JUN-2019

NOTE: All material and workmanship shall be in accordance with the current Oregon Standard Specifications

The selection and use of this Standard Drawing, while designed in accordance with generally accepted engineering principles and practices, is the sole responsibility of the user and should not be used without consulting a Registered Professional Engineer.

OREGON STANDARD DRAWINGS

CURBS

2018

Effective Date: December 1, 2019 - May 31, 2020 — RD700 — rd700.dgn 21-JUN-2019

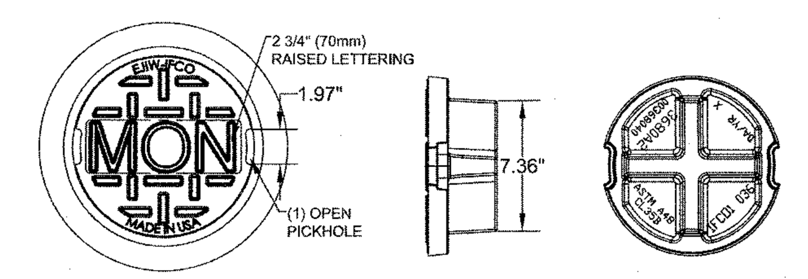

PLAN VIEW — SIDE VIEW — BOTTOM VIEW

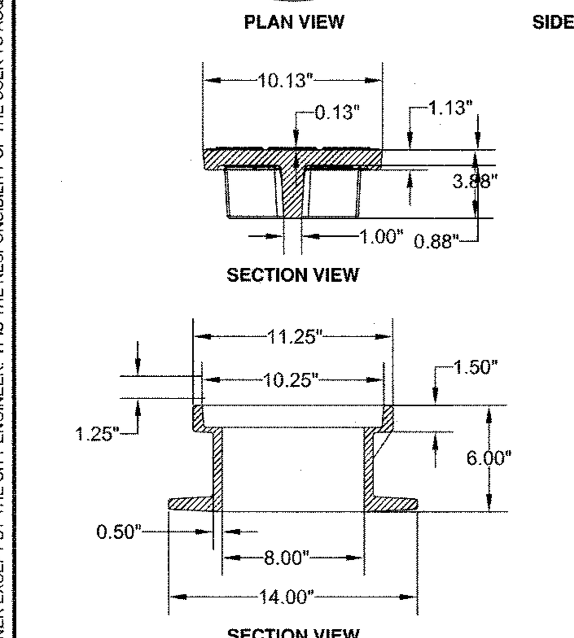

SECTION VIEW — SECTION VIEW

STANDARD 8" MONUMENT WELL
USED BY CLACKAMAS COUNTY SURVEY DEPARTMENT
WHERE SPEEDS ARE ABOVE 35 MPH

APPROVED FOR CONSTRUCTION BY CITY OF WEST LINN

This approval is only for general conformance with the design concept and general compliance with applicable codes and requirements and shall not be construed as relieving the Design Engineer of full responsibility for accuracy and completeness of the drawings. This plan review approval does not prevent the City from requiring further code corrections in the field.

DATE 10/22/2020 BY: [signature]

THIS DETAIL DRAWING SHALL NOT BE ALTERED OR CHANGED IN ANY MANNER EXCEPT BY THE CITY ENGINEER. IT IS THE RESPONSIBILITY OF THE USER TO ACQUIRE THE MOST CURRENT VERSION OF THE DETAIL.

EAST JORDAN IRON WORKS, INC.
P.O. BOX 439
EAST JORDAN, MI. 49727
1-800-874-4100
FAX: 231-536-4458

Anders Jorgenson
Oregon Sales Representative
East Jordan Iron Works
(503) 774-4144
Fax (503) 775-3263
Cell (503) 367-7925
ajorgenson@ejiw.com

8" MONUMENT BOX FRAME AND COVER

City of West Linn — DATE: 2010 — DRAWING NO. WL-513A — FILE NO.

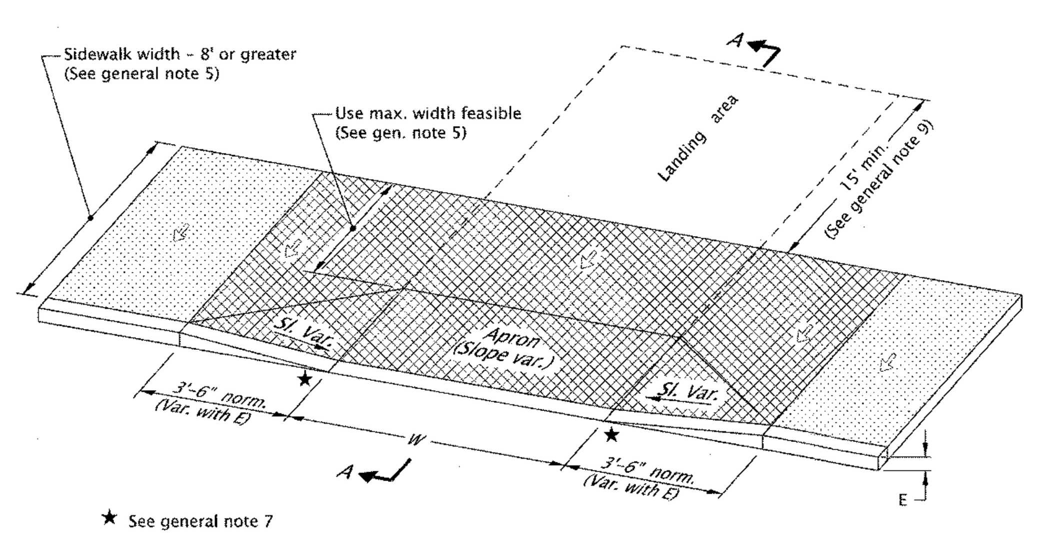

OPTION K
DRIVEWAY IN WIDE (8' OR GREATER) SIDEWALK

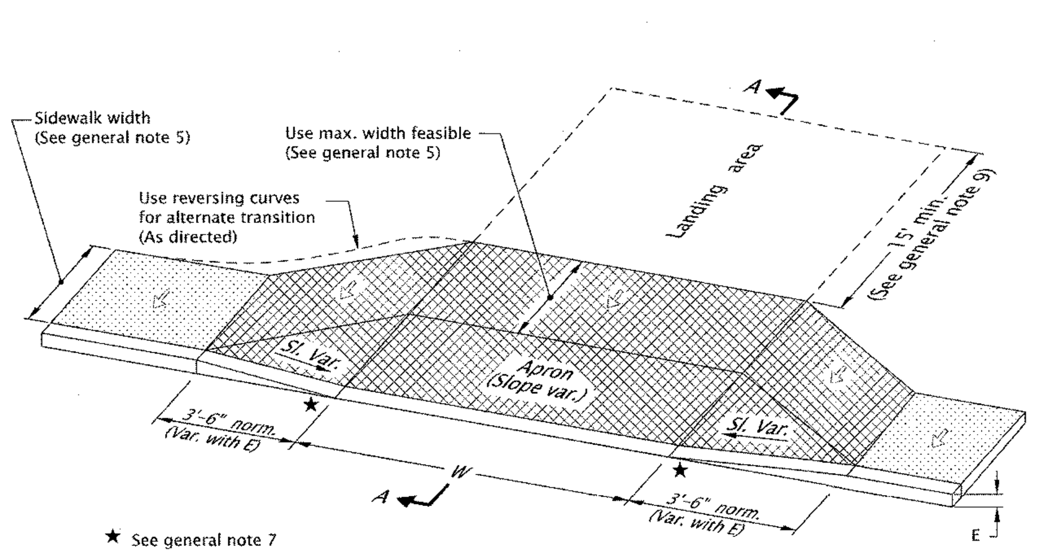

OPTION L
SIDEWALK WRAPPED AROUND DRIVEWAY

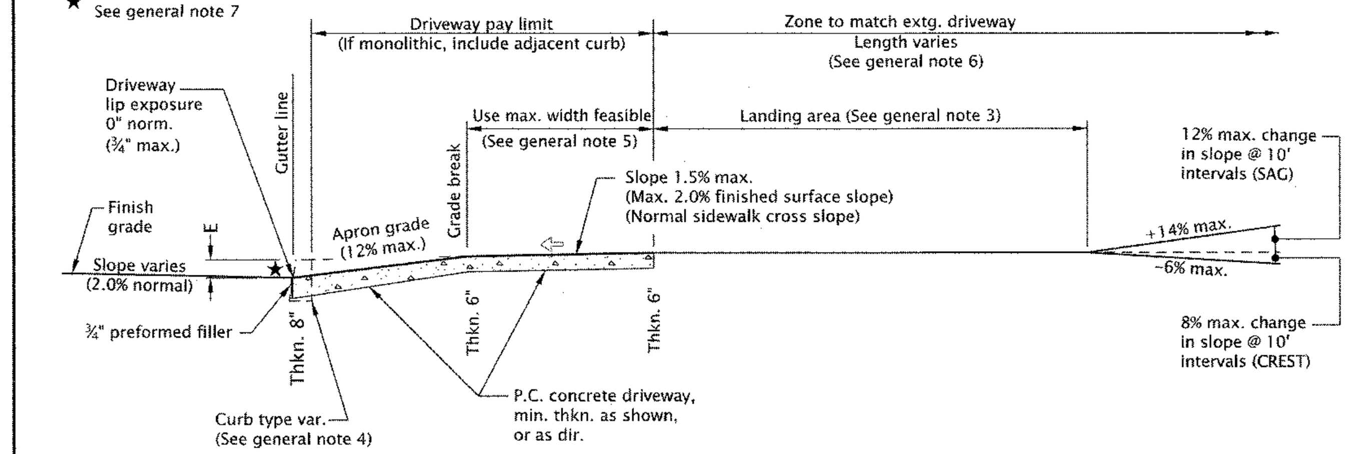

SECTION A-A

GENERAL NOTES FOR ALL DETAILS:

1. Details are based on United States Access Board Standards.
2. Only use details allowed by jurisdiction.
3. The following dimensions are as shown on plans, or as directed: driveway width, driveway slope, sidewalk width, curb exposure, driveway lip exposure, landing area length and width. See project plans for details not shown.
4. Curb, gutter, and sidewalk types varies, see plans. See Std. Dwgs. RD700 & RD701 for curb details. See Std. Dwg. RD720 for sidewalk details.
5. 4' unobstructed clear passage with slope 1.5% max. (Max. 2.0% finished surface slope) is required behind driveway apron.
6. Where existing driveway is in good condition, and meets slope requirements, construct only as much as required for satisfactory connection with new work.
7. Check the gutter flow depth at driveway locations to assure that the design flood does not overtop the back of sidewalk at driveway. If overtopping occurs place an inlet at upstream side of driveway or perform other approved design mitigation.
8. Tooled joints are required at all driveway slope break lines.
9. 15' min. of the driveway behind the sidewalk should be surfaced to prevent tracking of gravel onto the sidewalk.
10. Monolithic curb & sidewalk shall retain thickened edge through lowered profile, to accommodate driveway use. See Std. Dwg. RD720 for details.
11. Any dimensions except those of general note 5 may be amended by local agencies for their use.
12. On or along state highways, curb and gutter is required at curb ramps.

Sidewalk

Driveway pay limit (If monolithic, include adjacent curb) (See project plans for details not shown)

Slope 1.5% max. (Max. 2.0% finished surface slope) (Normal sidewalk cross slope)

W — Width of driveway

E — Curb exposure

NOTE: This drawing is to be used by local agencies to assist them in the design of driveways on their facilities.

CALC. BOOK NO. N/A — BASELINE REPORT DATE 16-JAN-2018

NOTE: All material and workmanship shall be in accordance with the current Oregon Standard Specifications

The selection and use of this Standard Drawing, while designed in accordance with generally accepted engineering principles and practices, is the sole responsibility of the user and should not be used without consulting a Registered Professional Engineer.

OREGON STANDARD DRAWINGS

CURB LINE SIDEWALK DRIVEWAYS OR ALLEYS (OPTIONS K & L) LOCAL JURISDICTIONS

2018

DATE	REVISION DESCRIPTION
01-2018	REVISED & ADDED NOTES

Effective Date: June 1, 2018 - November 30, 2018 — RD745 — rd745.dgn 16-JAN-2018

23190 BLAND CIRCLE SUBDIVISION
TAX MAP 2S1E 35AB
TAX LOT 9100
CITY OF WEST LINN, OREGON

STREET CONSTRUCTION DETAILS

REVISIONS

NO.	DATE	DESCRIPTION
0	02/19	PLANNING SUBMITTAL
1	08/19	PLANNING RESUBMITTAL
2	10/19	ENGINEERING 1ST SUBMITTAL
3	03/20	ENGINEERING 2ND SUBMITTAL

EMERIO Design
6445 SW FALLBROOK PLACE, SUITE 100
BEAVERTON, OREGON 97008
TEL: (503) 746-8812
FAX: (503) 639-9592
www.emeriodesign.com

REGISTERED PROFESSIONAL ENGINEER 54665 — OREGON — JULY 11, 2006 — ERIC DANIEL EVANS — DocuSigned by: Eric D. Evans 936474C69EA2449 — EXPIRES: 12/31/2021

SHEET 27 OF 31

DocuSign Envelope ID: CFBE966A-192B-4378-9E32-B4C08CAC394B

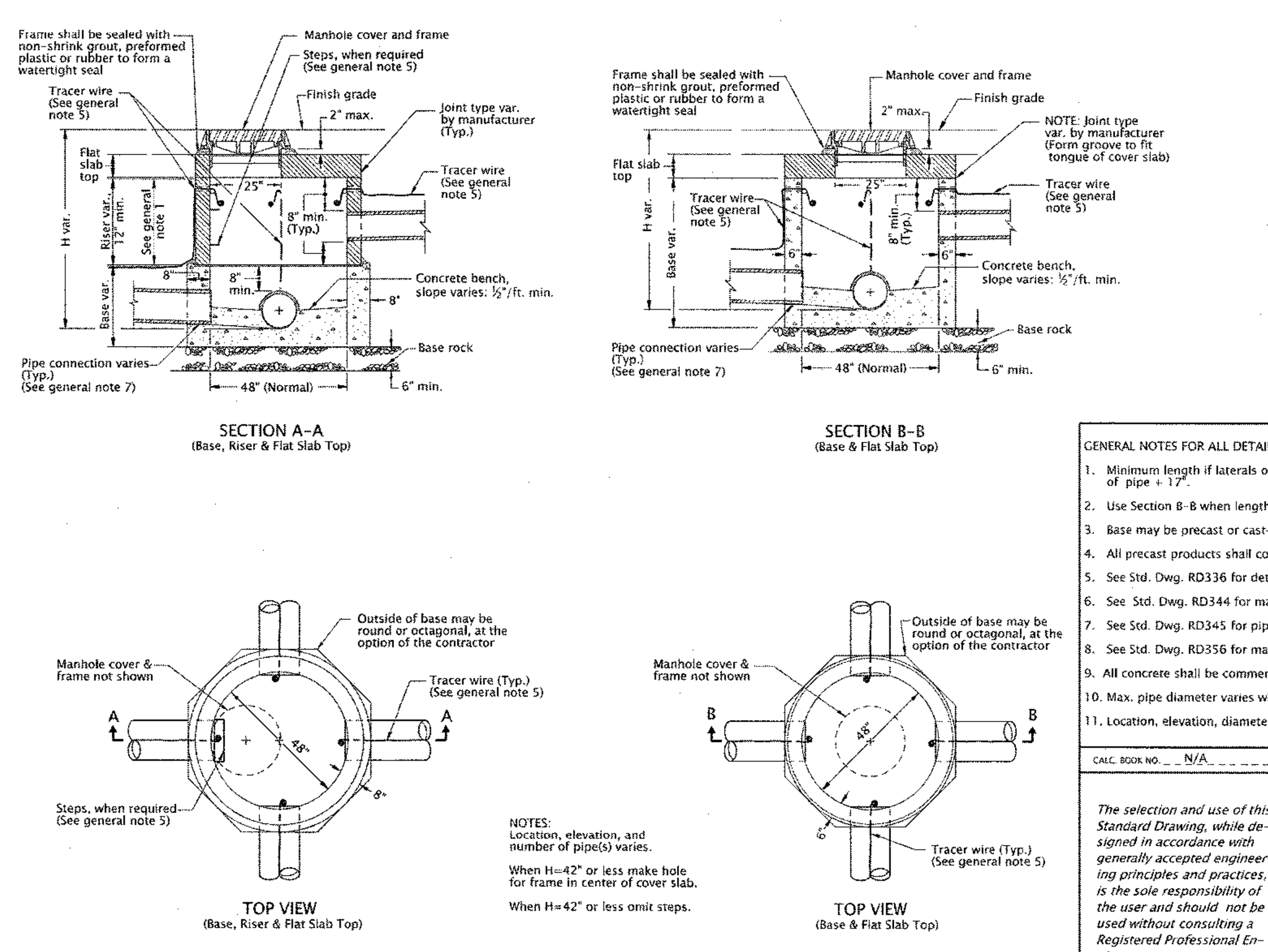

LEGEND
(See general note 3)

Cast-in-Place concrete
Precast concrete
1: 2 cement mortar
Sewer pipe

GENERAL NOTES FOR ALL DETAILS:

1. Minimum length if laterals or connections are inserted: outside diameter of pipe + 17".
2. Use Section B-B when length of riser becomes less than minimum shown.
3. Base may be precast or cast-in-place.
4. All precast products shall conform to the requirements of ASTM C478.
5. See Std. Dwg. RD336 for details not shown.
6. See Std. Dwg. RD344 for manhole base section.
7. See Std. Dwg. RD345 for pipe to manhole connections.
8. See Std. Dwg. RD356 for manhole covers and frames.
9. All concrete shall be commercial grade concrete.
10. Max. pipe diameter varies with pipe material.
11. Location, elevation, diameter, slope, and number of pipe(s) varies, see project plans.

NOTES:
Location, elevation, and number of pipe(s) varies.
When H=42" or less make hole for frame in center of cover slab.
When H≤42" or less omit steps.

CALC. BOOK NO. N/A — BASELINE REPORT DATE 21-JUL-2015
NOTE: All material and workmanship shall be in accordance with the current Oregon Standard Specifications

The selection and use of this Standard Drawing, while designed in accordance with generally accepted engineering principles and practices, is the sole responsibility of the user and should not be used without consulting a Registered Professional Engineer.

OREGON STANDARD DRAWINGS
SHALLOW MANHOLES
2018

Effective Date: December 1, 2019 - May 31, 2020 — RD342

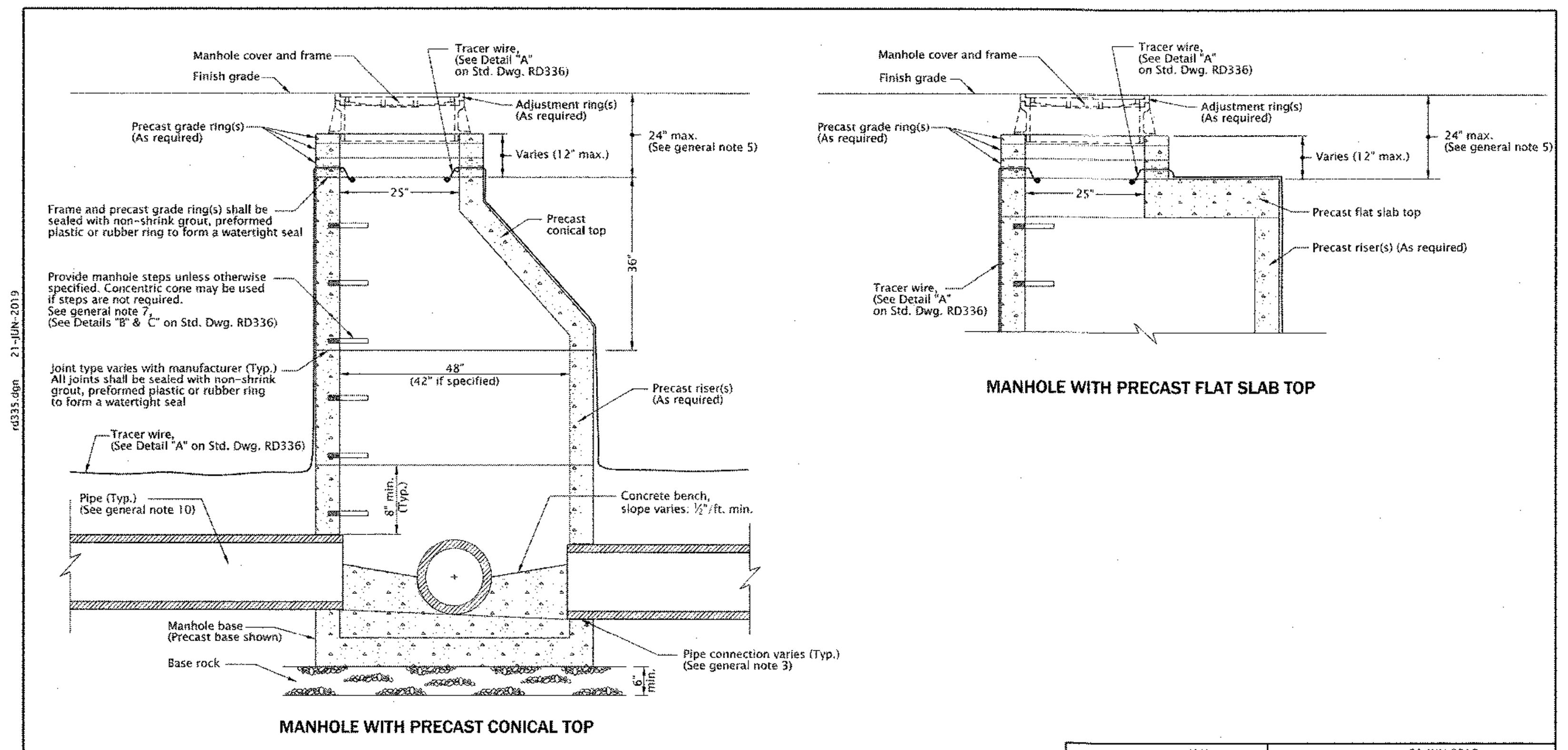

GENERAL NOTES FOR ALL DETAILS ON THIS SHEET:

1. All precast products shall conform to requirements of ASTM C478.
2. Standard precast manhole section diameter shall be 48". Use 42" if specified by the Engineer.
3. See Std. Dwg. RD345 for pipe to manhole connections.
4. See Std. Dwg. RD344 for manhole base section.
5. Adjust 24" maximum.
6. All connecting pipes shall have a tracer wire, or approved alternate.
7. See Std. Dwg. RD336 for manhole steps.
8. See Std. Dwg. RD336 for details not shown.
9. See Std. Dwg. RD356 for manhole covers and frames, manhole adjustment rings, etc.
10. Max. pipe diameter varies with pipe material.
11. See Std. Dwg. RD342 for shallow manholes.
12. Location, elevation, diameter, slope, and number of pipe(s) varies, see project plans.

CALC. BOOK NO. N/A — BASELINE REPORT DATE 21-JUN-2019
NOTE: All material and workmanship shall be in accordance with the current Oregon Standard Specifications

The selection and use of this Standard Drawing, while designed in accordance with generally accepted engineering principles and practices, is the sole responsibility of the user and should not be used without consulting a Registered Professional Engineer.

OREGON STANDARD DRAWINGS
STANDARD STORM SEWER MANHOLE
2018

Effective Date: December 1, 2019 - May 31, 2020 — RD335

NOTES:
1. Provide 1½" local depression at points A & B.
2. Match normal pvmt. grade at points C, D, E & F.
3. Vary transition section slopes to match above points.

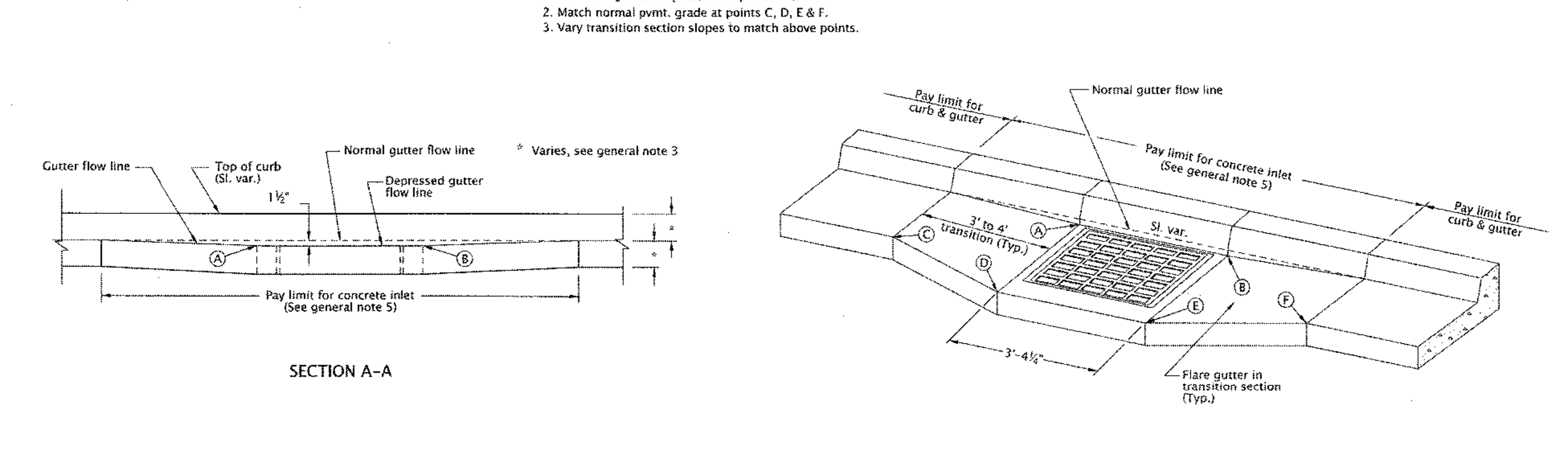

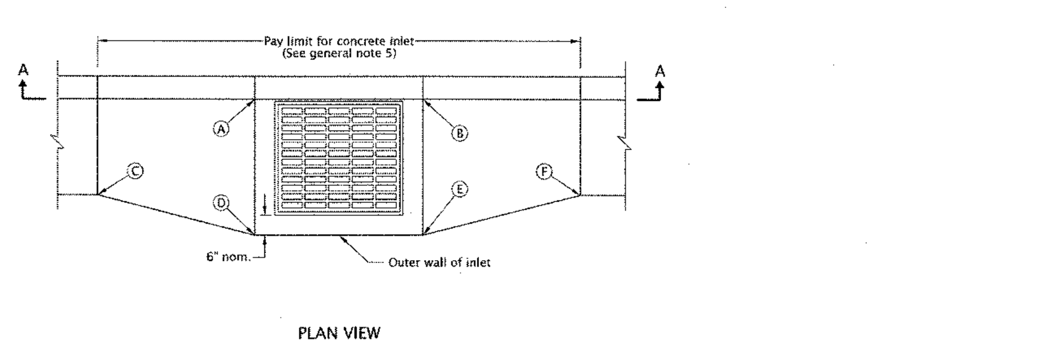

GENERAL NOTES FOR ALL DETAILS:

1. For inlet details, see appropriate inlet standard drawing(s).
2. For frame and grate details, see Std. Dwg. RD365.
3. For curb details, see Std. Dwgs. RD700 & RD701.
4. All concrete shall be commercial grade concrete.
5. Pay limit for inlet is expanded when curb and gutter are monolithic.

CALC. BOOK NO. N/A — BASELINE REPORT DATE 21-JUL-2015
NOTE: All material and workmanship shall be in accordance with the current Oregon Standard Specifications

The selection and use of this Standard Drawing, while designed in accordance with generally accepted engineering principles and practices, is the sole responsibility of the user and should not be used without consulting a Registered Professional Engineer.

OREGON STANDARD DRAWINGS
GUTTER TRANSITION AT INLET
2018

Effective Date: December 1, 2019 - May 31, 2020 — RD363

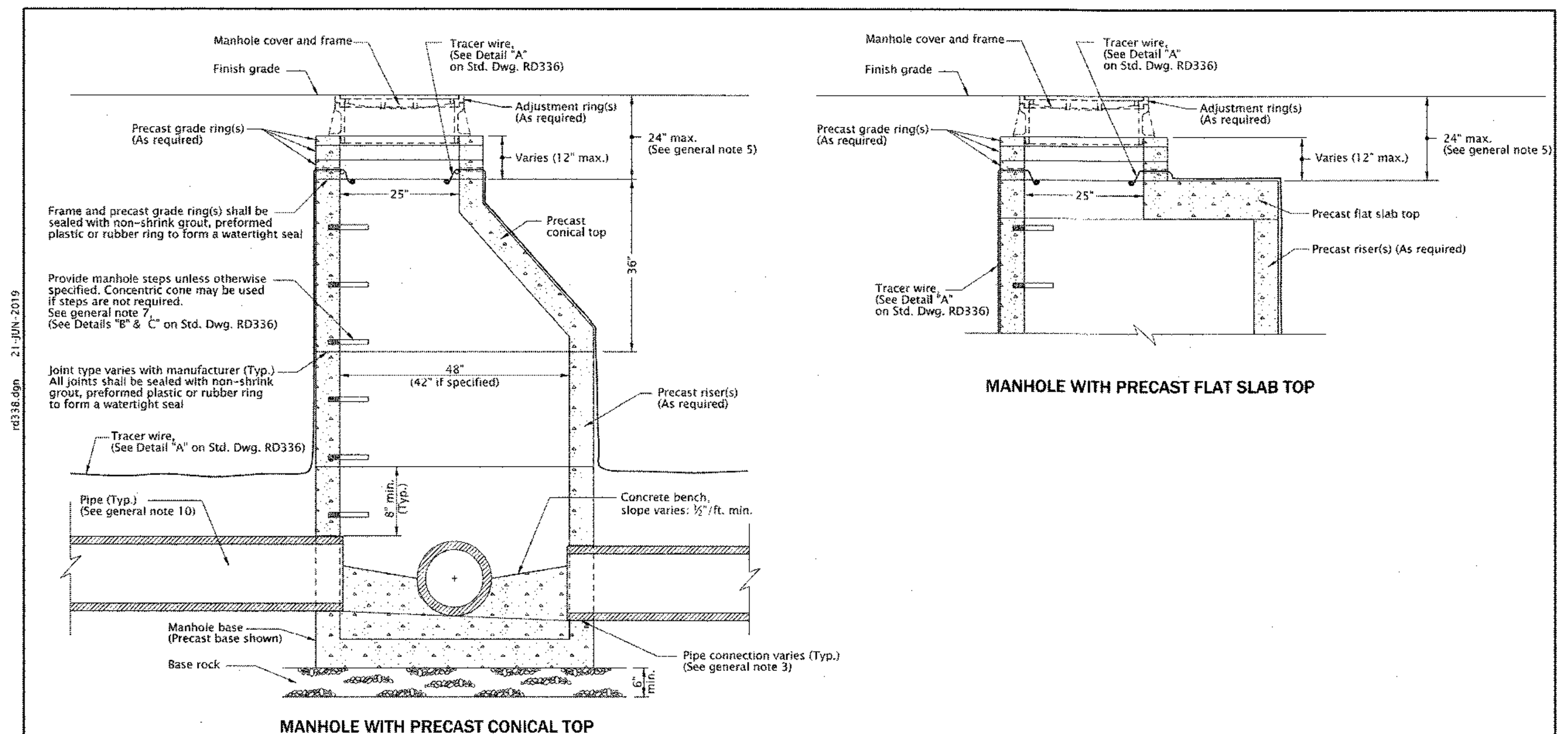

GENERAL NOTES FOR ALL DETAILS ON THIS SHEET:

1. All precast products shall conform to requirements of ASTM C478.
2. Standard precast manhole section diameter shall be 48". Use 42" if specified by the Engineer.
3. See Std. Dwg. RD345 for pipe to manhole connections.
4. See Std. Dwg. RD344 for manhole base section.
5. Adjust 24" maximum.
6. All connecting pipes shall have a tracer wire, or approved alternate.
7. See Std. Dwg. RD336 for manhole steps.
8. See Std. Dwg. RD336 for details not shown.
9. See Std. Dwg. RD356 for manhole covers and frames, manhole adjustment rings, etc.
10. Max. pipe diameter varies with pipe material.
11. See Std. Dwg. RD342 for shallow manholes.
12. Location, elevation, diameter, slope, and number of pipe(s) varies, see project plans.
13. This detail limited to interior drop of 24".
See Std. Dwgs. RD350 or RD352 for drop manhole details for drops in excess of 24".

CALC. BOOK NO. N/A — BASELINE REPORT DATE 21-JUN-2019
NOTE: All material and workmanship shall be in accordance with the current Oregon Standard Specifications

The selection and use of this Standard Drawing, while designed in accordance with generally accepted engineering principles and practices, is the sole responsibility of the user and should not be used without consulting a Registered Professional Engineer.

OREGON STANDARD DRAWINGS
STANDARD SANITARY SEWER MANHOLE
2018

Effective Date: December 1, 2019 - May 31, 2020 — RD338

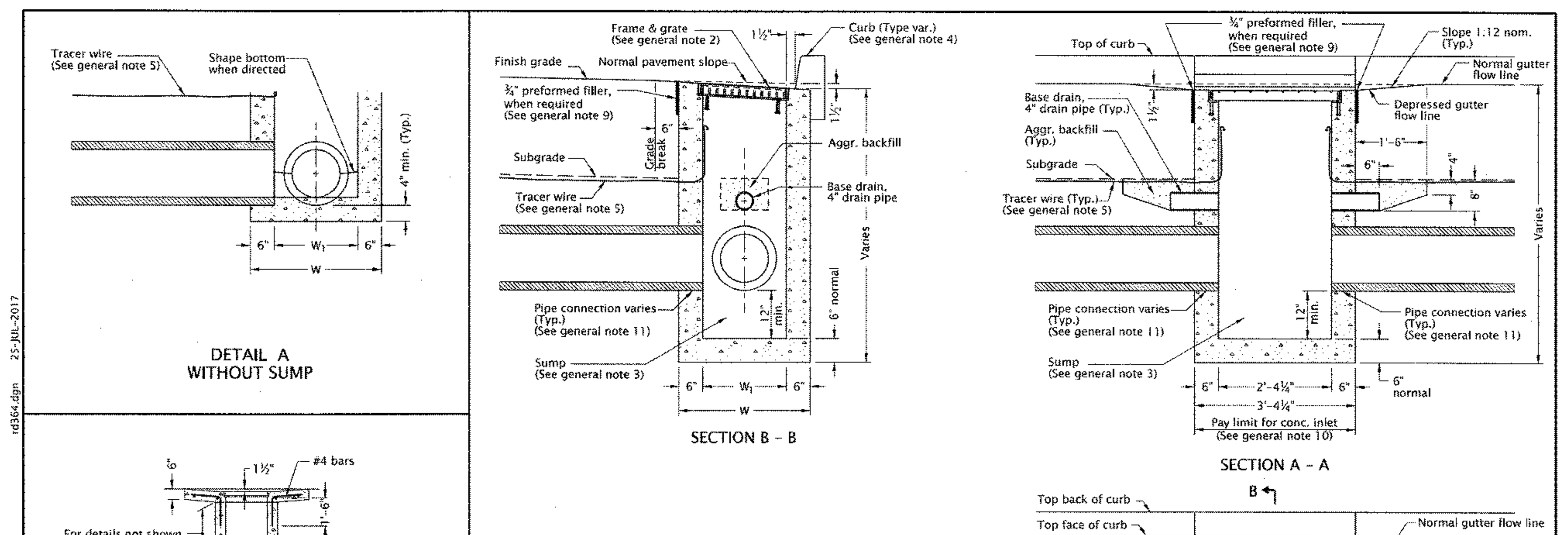

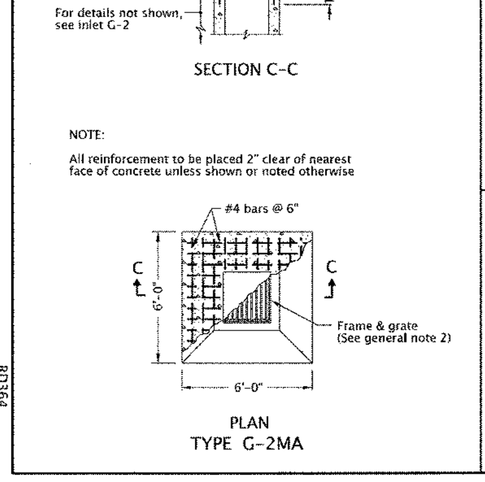

TABLE A

INLET TYPE	W	W_1
G-1	2'-8⅞"	1'-8⅞"
G-2, G-2M, G-2MA	3'-3⅜"	2'-3⅜"

NOTE:
All reinforcement to be placed 2" clear of nearest face of concrete unless shown or noted otherwise

GENERAL NOTES FOR ALL DETAILS:

1. Where precast inlets are used as an alternate to cast-in-place inlets, a 4" compacted leveling bed of sand or ¾"-0 crushed aggregate shall be provided. All precast inlets shall conform to requirements of ASTM C913.
2. Graphics show G-1 inlet with Type 2 grate. See Table A for inlet dimensions. Type 1 grate allowed only in locations not subject to bicycle or pedestrian use. For frame and grate details, see Std. Dwg. RD365.
3. Provide sump only where shown on plans, and allowed by jurisdiction. See Detail A for inlet without sump.
4. For curb details, see Std. Dwgs. RD700 & RD701.
5. See Std. Dwg. RD336 for tracer wire details, or approved alternate.
6. Max. pipe diameter varies with pipe material.
7. Location, elevation, diameter, slope, and number of pipe(s) varies, see project plans.
8. All concrete shall be commercial grade concrete.
9. ¾" preformed filler (in concrete pavement or gutter only) to extend through thickness of concrete.
10. See Std. Dwg. RD363 for gutter transition section, when curb and gutter are required.
11. See Std. Dwg. RD339 for pipe to structure connections.

CALC. BOOK NO. N/A — BASELINE REPORT DATE
NOTE: All material and workmanship shall be in accordance with the current Oregon Standard Specifications

The selection and use of this Standard Drawing, while designed in accordance with generally accepted engineering principles and practices, is the sole responsibility of the user and should not be used without consulting a Registered Professional Engineer.

OREGON STANDARD DRAWINGS
CONCRETE INLETS TYPE G-1, G-2, G-2M, & G-2MA
2018

Effective Date: December 1, 2019 - May 31, 2020 — RD364

GENERAL NOTES FOR ALL DETAILS:

1. Where precast inlets are used as an alternate to cast-in-place inlets, a 4" compacted leveling bed of sand or ¾"-0 crushed aggregate shall be provided. All precast inlets shall conform to requirements of ASTM C913.
2. Graphics show CG-1 inlet with Type 2 grate. See Table A for inlet dimensions. Type 1 grate allowed only in locations not subject to bicycle or pedestrian use. For frame and grate details, see Std. Dwg. RD365.
3. Provide sump only where shown on plans, and allowed by jurisdiction. See Detail B for inlet without sump.
4. For curb details, see Std. Dwgs. RD700 & RD701.
5. See Std. Dwg. RD336 for tracer wire details, or approved alternate.
6. Max. pipe diameter varies with pipe material.
7. Location, elevation, diameter, slope, and number of pipe(s) varies, see project plans.
8. All concrete shall be commercial grade concrete.
9. ¾" preformed filler (in concrete pavement or gutter only) to extend through thickness of concrete.
10. See Std. Dwg. RD363 for gutter transition section, when curb and gutter are required. (Pay limit for inlet is expanded when curb and gutter are monolithic)
11. See Std. Dwg. RD339 for pipe to structure connections.

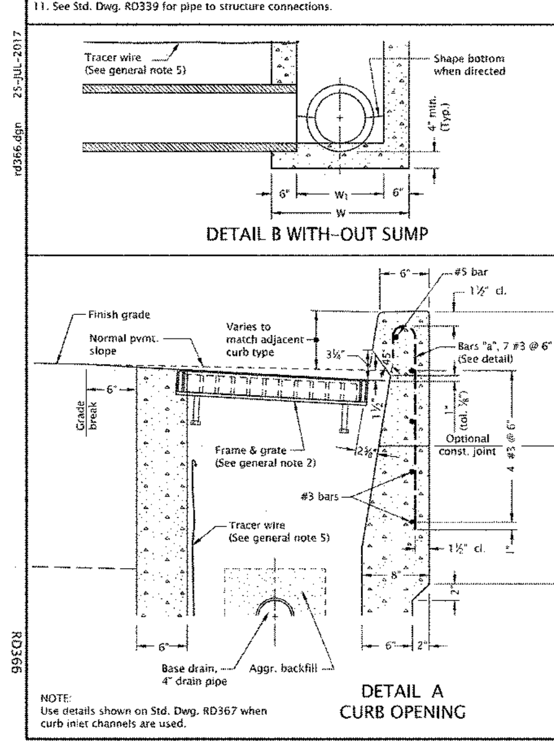

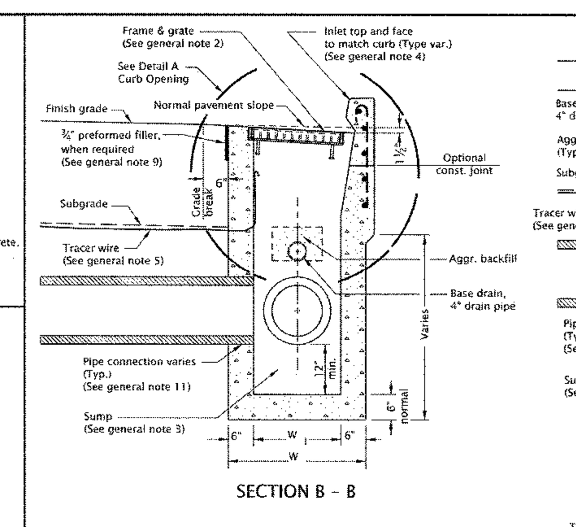

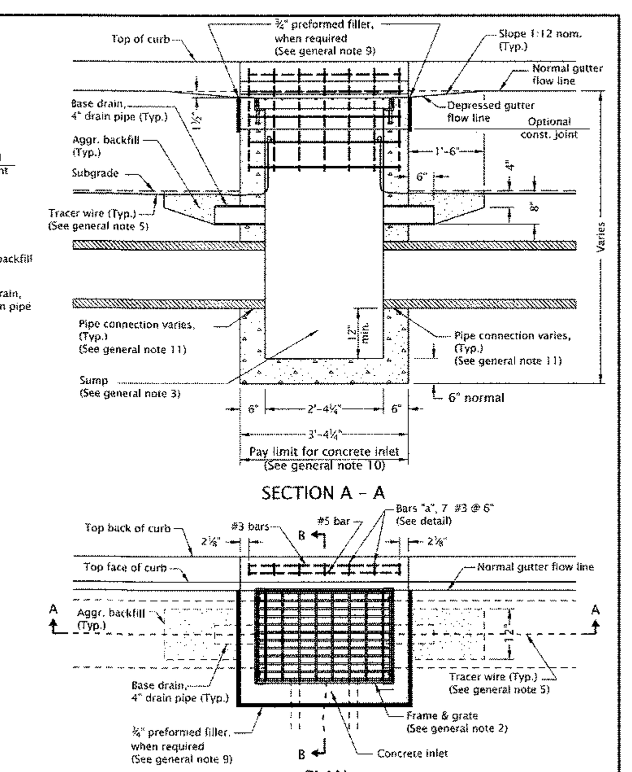

TABLE A

INLET TYPE	W	W_1
CG-1	2'-8⅞"	1'-8⅞"
CG-2	3'-3⅜"	2'-3⅜"

NOTES:
1. #3 "a" bars to be placed during curb construction.
2. All bars to be placed 1½" clear of nearest face of concrete unless shown or noted otherwise.
3. All bars shall be full length.

NOTE:
Use details shown on Std. Dwg. RD367 when curb inlet channels are used.

CALC. BOOK NO. N/A — BASELINE REPORT DATE 21-JUL-2015
NOTE: All material and workmanship shall be in accordance with the current Oregon Standard Specifications

The selection and use of this Standard Drawing, while designed in accordance with generally accepted engineering principles and practices, is the sole responsibility of the user and should not be used without consulting a Registered Professional Engineer.

OREGON STANDARD DRAWINGS
CONCRETE INLETS TYPE CG-1, CG-2
2018

Effective Date: December 1, 2019 - May 31, 2020 — RD366

APPROVED FOR CONSTRUCTION BY CITY OF WEST LINN
This approval is only for general conformance with the design concept and general compliance with applicable codes and requirements and shall not be construed as relieving the Design Engineer of full responsibility for accuracy and completeness of the drawings. This plan review approval does not prevent the City from requiring further code corrections in the field.
DATE: 6/22/2020 BY: [signature]

23190 BLAND CIRCLE SUBDIVISION
TAX MAP 2S1E 35AB
TAX LOT 9100
CITY OF WEST LINN, OREGON

STORM WATER & SANITARY SEWER CONSTRUCTION DETAILS

REVISIONS

NO.	DATE	DESCRIPTION
0	02/19	PLANNING SUBMITTAL
1	08/19	PLANNING RESUBMITTAL
2	10/19	ENGINEERING 1ST SUBMITTAL
3	03/20	ENGINEERING 2ND SUBMITTAL

EMERIO Design
6445 SW FALLBROOK PLACE, SUITE 100
BEAVERTON, OREGON 97008
TEL: (503) 746-8812
FAX: (503) 639-9592
www.emeriodesign.com

REGISTERED PROFESSIONAL ENGINEER 54665 — DocuSigned by: Eric D. Evans — 936474C69EA2449 — OREGON JULY 11, 2006 — ERIC DANIEL EVANS — EXPIRES: 12/31/2021

SHEET 28 OF 31

FILE: P:\0542-001 23190 S Bland Circle\dwg\civ\Engineering Set\0542-001_28det3, Layout: 28 STORM WATER & SANITARY SEWER CONSTRUCTION DETAILS, Plot Date: 5/22/2020 3:38 PM, by: Josh Ayers

DocuSign Envelope ID: CFBE966A-192B-4378-9E32-B4C08CAC394B

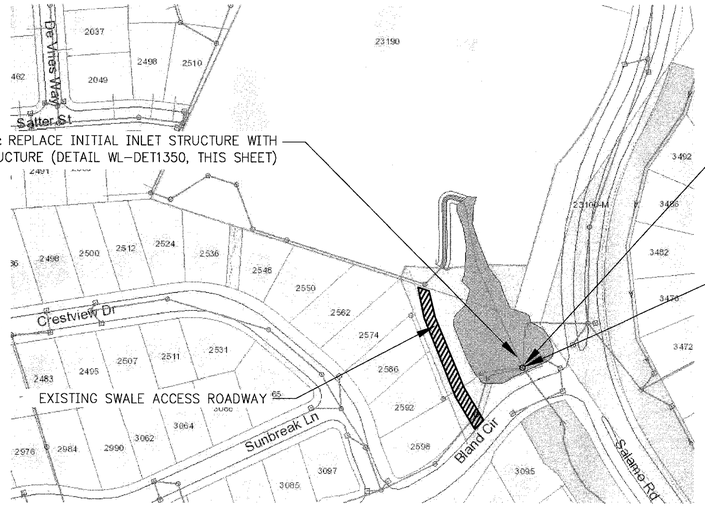

CONTRACTOR TO REMOVE & REPLACE INITIAL INLET STRUCTURE WITH GRATED HEADWALL STRUCTURE (DETAIL WL-DET1350, THIS SHEET)

ADD 3' WIDE GRAVEL WALKING/MAINTENANCE ACCESS MEANDERING ALONG THE EAST SIDE OF THE EXISTING GRATED MANHOLE OUTLET STRUCTURE DOWN TO PROPOSED GRATED HEADWALL STRUCTURE. COORDINATE W/ CITY MAINTENANCE CREWS FOR EXACT PLACEMENT.

EXISTING 60" GRATED FLOW CONTROL STRUCTURE
EX RIM ELEV = 533.70'
EX FLOW CONTROL ORIFICE SIZE = 2.19"
EX TOP OF OVERFLOW WEIR ELEV = 527.05'

CONSTRUCTION NOTES:
CONTRACTOR TO MODIFY ORIFICE SIZE & WEIR WALL INSIDE EXISTING FLOW CONTROL STRUCTURE. RIM ELEV & ALL OTHER STRUCTURE PROPERTIES TO REMAIN UNCHANGED.

PR FLOW CONTROL ORIFICE SIZE = 14.8"
PR ORIFICE INVERT = 523.60'
PR TOP OF OVERFLOW WEIR ELEV = 531.86'

EXISTING FLOW CONTROL STRUCTURE MODIFICATION

SCALE: NTS

APPROVED FOR CONSTRUCTION BY
CITY OF WEST LINN
This approval is only for general conformance with the design concept and general compliance with applicable codes and requirements and shall not be construed as relieving the Design Engineer of full responsibility for accuracy and completeness of the drawings. This plan review approval does not prevent the City from requiring further code corrections in the field.
DATE 9/22/2020 BY:

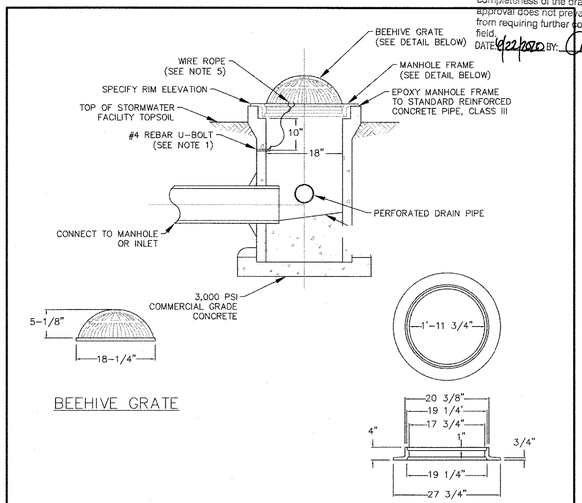

NOTES

1. SECURE GRATE IN PLACE WITH 54" OF WIRE ROPE. LOOP ENDS OF WIRE ROPE AROUND U-BOLT AND GRATE. CRIMP EACH END OF WIRE ROPE WITH 3" OVERLAP.
2. DRILL 2" DEEP HOLES INTO PIPE AND EPOXY #4 REBAR U-BOLT (2"X 4") IN HOLES.
3. GRATE TO BE CAST IRON, ASTM A48 CL30.
4. SIZE INLET BASED ON CALCULATED FLOWS AND MANUFACTURERS RECOMMENDATIONS.
5. WIRE ROPE BETWEEN 1/8"-3/16" DIAMETER, STAINLESS STEEL, 7 STRANDS OF 19 WIRES.

BEEHIVE INLET

DRAWING NO. 405 REVISED 10-31-19

Clean Water Services

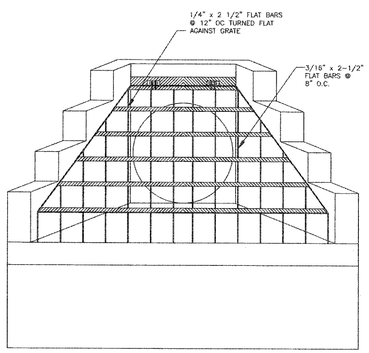

NOTE:
1. ALL WALL THICKNESS ON THIS PAGE ARE 8" UNLESS OTHERWISE NOTED.

STEEL NOTES:
A. CODES SPECIFICATIONS: STEEL CONSTRUCTION SHALL CONFORM TO THE SPECIFICATIONS AND STANDARDS AS CONTAINED IN THE CURRENT EDITION OF THE AISC MANUAL OF STEEL CONSTRUCTION.
B. MATERIAL: STRUCTURAL SHAPES, BARS, PLATES, AND SHEETS INDICATED ON THE DRAWINGS SHALL BE STEEL MEETING ASTM A36 SPECIFICATIONS. BOLTS SHALL CONFORM TO ASTM A307.
C. WELDING: WELDING SHALL CONFORM TO AWS D1.1 CODE FOR ARC AND GAS WELDING IN BUILDING CONSTRUCTION. ELECTRODE SHALL BE E70XX LOW HYDROGEN GROUP. WELDING SHALL BE CONDUCTED BY WELDERS CERTIFIED BY THE AWS. ALL WELDS SHALL BE MIN 3/16" FILLET UNLESS OTHERWISE NOTED.
D. HOT DIP GALVANIZING: UNLESS OTHERWISE NOTED, ALL STEEL FABRICATIONS SHALL BE HOT DIP GALVANIZED AFTER FABRICATION.

Title: STANDARD INLET AND OUTLET HEADWALL STRUCTURE (FOR OUTLETS OF 36" DIA. OR SMALLER)
Standard Drawing No. WL-DET1350
Effective Date: 10/18/18
Approved: City Engineer
West Linn
PUBLIC WORKS DEPARTMENT - STANDARD DRAWINGS
22500 Salamo Road, West Linn OR 97068
(503) 657-0824 FAX (503) 656-4106
NOTE: Drawings and specifications are the property and shall remain the property of the City of West Linn. Reproduction or reuse for other purposes requires the written consent of the City.
This standard and use of this standard is governed by the provisions of ORS 672.020 and 672.025 and is intended for use by registered professionals.
CAD_FILE_NAME

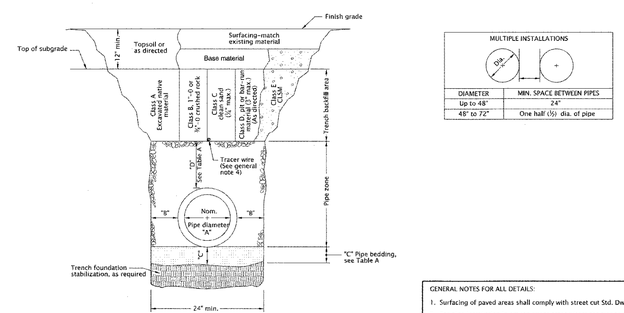

TABLE A

"A" (in)	"B" (in)	"C" (in)	"D" (in)
4	10	4	8
6	10	4	8
8	10	6	10
10	10	6	10
12	12	6	10
15	12	6	10
18	16	6	12
21	16	6	12
24	18	6	12
30	18	6	12
36	24	6	14
42	24	6	14
48	24	6	14
54	24	6	14
60	24	6	14
66	24	6	14
72	24	6	14

For pipes over 72" diameter, see general note 3.

MULTIPLE INSTALLATIONS

DIAMETER	MIN. SPACE BETWEEN PIPES
Up to 48"	24"
48" to 72"	One half (½) dia. of pipe

GENERAL NOTES FOR ALL DETAILS:

1. Surfacing of paved areas shall comply with street cut Std. Dwg. RD302.
2. For pipe installation in embankment areas where the trench method will not be used and the pipe is ≥ 36" diameter, increase dimension "B" to nominal pipe diameter.
3. Pipes over 72" diameter are structures, and are not applicable to this drawing.
4. See Std. Dwg. RD336 for tracer wire details (When required).

CALC. BOOK NO. N/A | BASELINE REPORT DATE 14-JUL-2014

The selection and use of this Standard Drawing, while designed in accordance with generally accepted engineering principles and practices, is the sole responsibility of the user and should not be used without consulting a Registered Professional Engineer.

NOTE: All material and workmanship shall be in accordance with the current Oregon Standard Specifications.

OREGON STANDARD DRAWINGS

TRENCH BACKFILL, BEDDING, PIPE ZONE AND MULTIPLE INSTALLATIONS

2018

DATE	REVISION DESCRIPTION

Effective Date: December 1, 2019 - May 31, 2020 RD300

23190 BLAND CIRCLE SUBDIVISION
TAX MAP 2S1E 35AB
TAX LOT 9100
CITY OF WEST LINN, OREGON

STORM WATER & SANITARY SEWER CONSTRUCTION DETAILS

REVISIONS

NO.	DATE	DESCRIPTION
0	02/19	PLANNING SUBMITTAL
1	08/19	PLANNING RESUBMITTAL
2	10/19	ENGINEERING 1ST SUBMITTAL
3	03/20	ENGINEERING 2ND SUBMITTAL

EMERIO Design
6445 SW FALLBROOK PLACE, SUITE 100
BEAVERTON, OREGON 97008
TEL: (503) 746-8812
FAX: (503) 639-9592
www.emeriodesign.com

REGISTERED PROFESSIONAL ENGINEER 54685 DocuSigned by: Eric D Evans 2084A7AC8B5A444... 9/11/2020 ERIC DANIEL EVANS
EXPIRES: 12/31/2021

SHEET 29 OF 31

FILE:P:\0542-001 23190 S Bland Circle\dwg\civil\Engineering Set\0542-001_29de14, Layout: 29 STORM WATER & SANITARY SEWER CONSTRUCTION DETAILS, Plot Date: 5/22/2020 3:38 PM, by: Josh Ayers

DocuSign Envelope ID: CFBE966A-192B-4378-9E32-B4C08CAC394B

WEST LINN PLANNING COMMISSION

FINAL DECISION AND ORDER

SUB-19-01, WAP-19-02, and WRG-19-01

IN THE MATTER OF A PROPOSAL TO DEVELOP A 25-LOT SUBDIVISION

I. Overview

At its meeting on November 6, 2019, the West Linn Planning Commission ("Commission") held the initial evidentiary public hearing to consider the request by Toll Brothers, applicant, to approve a proposal to develop a 25-lot subdivision with a Water Resource Area Permit (WAP) and Willamette River Greenway Permit (WRG) at 23190 Bland Circle. The approval criteria for land division are found in Chapter 85, the WAP permit in Chapter 32, and the WRG permit in Chapter 28 of the Community Development Code (CDC). The hearing was conducted pursuant to the provisions of CDC Chapter 99.

The initial evidentiary hearing commenced with a staff report presented by Jennifer Arnold, Associate Planner. Phil Grillo, Attorney with Davis Wright Tremaine, presented on the applicant's behalf with assistance from Dana Beckwith, Global Transportation Engineering, for transportation safety concerns. Roberta Schwarz (Savanna Oaks Neighborhood Association), Michel Romanio, Mary Ann Madjecheck, David Sloop, and Jim McKune, and Helen Lee provided oral testimony. Dean McDonald and Robert and Kristy Musalo also submitted written testimony. The primary concerns raised during testimony included:

- Tree removal
- Traffic safety
- Construction parking and access
- Traffic congestion in nearby neighborhoods

Applicant representatives provide rebuttal and answered questions using statements or reports found in the land use application. The applicant requested a continuance to perform a limited traffic analysis and the Planning Commission left the public hearing open and continued the hearing to December 4, 2019.

At the continued hearing on December 4, 2019, Phil Grillo, Attorney with Davis Wright Tremaine, and Dana Beckwith, Global Transportation Engineering presented on the applicant's behalf to present the findings of the limited traffic analysis. Although the record was left open, there was no additional written or oral public testimony presented at the hearing.

The hearing was closed and the Planning Commission deliberated, including a discussion on additional conditions of approval imposed on a recently approved subdivision in the area. A motion was made by Commissioner Kelly and seconded by Commissioner Pellett to approve the application with the four Staff recommended conditions of approval in addition to three

additional conditions. The motion was passed with five votes in favor (Commissioners Kelly, Farrell, Mathews, Metlen, and Pellett) and one vote opposed (Commissioner King).

II. The Record

The record was finalized at the December 4, 2019, hearing. The record includes the entire file from SUB-19-01/WAP-19-02/WRG-19-01.

III. Findings of Fact

1) The Overview set forth above is true and correct.
2) The applicant is Toll Brothers.
3) The Commission finds that it has received all information necessary to make a decision based on the Staff Report and attached findings; public comment; and the evidence in the whole record, including any exhibits received at the hearing.

IV. Findings

The Commission adopts the Staff Report for November 6, 2019, with attachments, as its findings, which are incorporated by this reference with the original four conditions of approval and addition of conditions of approval 5, 6, and 7. The Commission concludes that all of the required approval criteria are met subject to the following conditions of approval:

1. **<u>Site Plan</u>. With the exception of modifications required by these conditions, the final plat shall conform to the submitted Tentative Plan, (Sheet 6 of 11 "Preliminary Plat").**

2. **<u>Engineering Standards</u>. All public improvements and facilities including street improvements, utilities, grading, onsite storm water design, driveway placement and construction, pavement mitigation, street lighting, street trees, easements, and easement locations are subject to the City Engineer's review, modification, and approval per the City adopted Public Works standards. All improvements must be designed, constructed, and completed prior to final plat approval. The Director of Public Works may allow a waiver of improvements as allowed by Code.**

3. **<u>HCA Boundary</u>. The HCA Boundary is revised to correct an identified mapping error (Staff Finding 2). A copy of the map change report and final findings shall be provided to Metro and the City's GIS mapping to initiate the change.**

4. **<u>Access & Utility Easement.</u> An access and utility easement is required over Tract C to serve proposed lots 9 and 10. An access and utility easement is required over the 'flag poles' accessing proposed lots 16 and 17.**

5. **<u>Construction Parking.</u> On the portion of Satter Street that adjoins the proposed development, where Satter Street is 24 feet wide, no construction vehicle parking shall be allowed.**

6. **<u>Construction Access.</u> Construction traffic to/from the proposed development shall be restricted to an access via Salamo Road until such time the Director of Public Works determines that the access would prohibit or negatively impact construction actions.**

7. **<u>No Parking.</u> All roads within the proposed development that are such a width to only allow parking on one side of the street, shall be posted according to TVF&R standards prior to approval of the final plat.**

V. Order

The Commission concludes that SUB-19-01/WAP-19-02/WRG-19-01 is approved based on the Record, Findings of Fact and Findings above.

Charlie Mathews — 12/16/19

CHARLIE MATHEWS, VICE-CHAIR — DATE

WEST LINN PLANNING COMMISSION

This decision may be appealed to the City Council pursuant to the provisions of Chapter 99 of the Community Development Code and any other applicable rules and statutes. This decision will become effective 14 days from the date of mailing of this final decision as identified below.

Mailed this 17 day of December, 2019.

Therefore, this decision becomes effective at 5 p.m., December 31, 2019.

APPROVED FOR CONSTRUCTION BY
CITY OF WEST LINN
This approval is only for general conformance with the design concept and general compliance with applicable codes and requirements and shall not be construed as relieving the Design Engineer of full responsibility for accuracy and completeness of the drawings. This plan review approval does not prevent the City from requiring further code corrections in the field.
DATE: 10/22/2020

23190 BLAND CIRCLE
SUBDIVISION
TAX MAP 2S1E 35AB
TAX LOT 9100
CITY OF WEST LINN, OREGON

CONDITIONS OF APPROVAL

REVISIONS

NO.	DATE	DESCRIPTION
0	02/19	PLANNING SUBMITTAL
1	08/19	PLANNING RESUBMITTAL
2	10/19	ENGINEERING 1ST SUBMITTAL
3	03/20	ENGINEERING 2ND SUBMITTAL

EMERIO Design
6445 SW FALLBROOK PLACE, SUITE 100
BEAVERTON, OREGON 97008
TEL: (503) 746-8812
FAX: (503) 639-9592
www.emeriodesign.com

REGISTERED PROFESSIONAL ENGINEER 54665 DocuSigned by: Eric D. Evans 10/22/2020 ERIC DANIEL EVANS
EXPIRES: 12/31/2021

SHEET 30 OF 31

FILE:P:\0542-001 23190 S Bland Circle\dwg\civil\Engineering Set\0542-001_30defs, Layout: 30 CONDITIONS OF APPROVAL, Plot Date: 5/22/2020 3:38 PM, by: Josh Ayers

DocuSign Envelope ID: CFBE966A-192B-4378-9E32-B4C08CAC394B

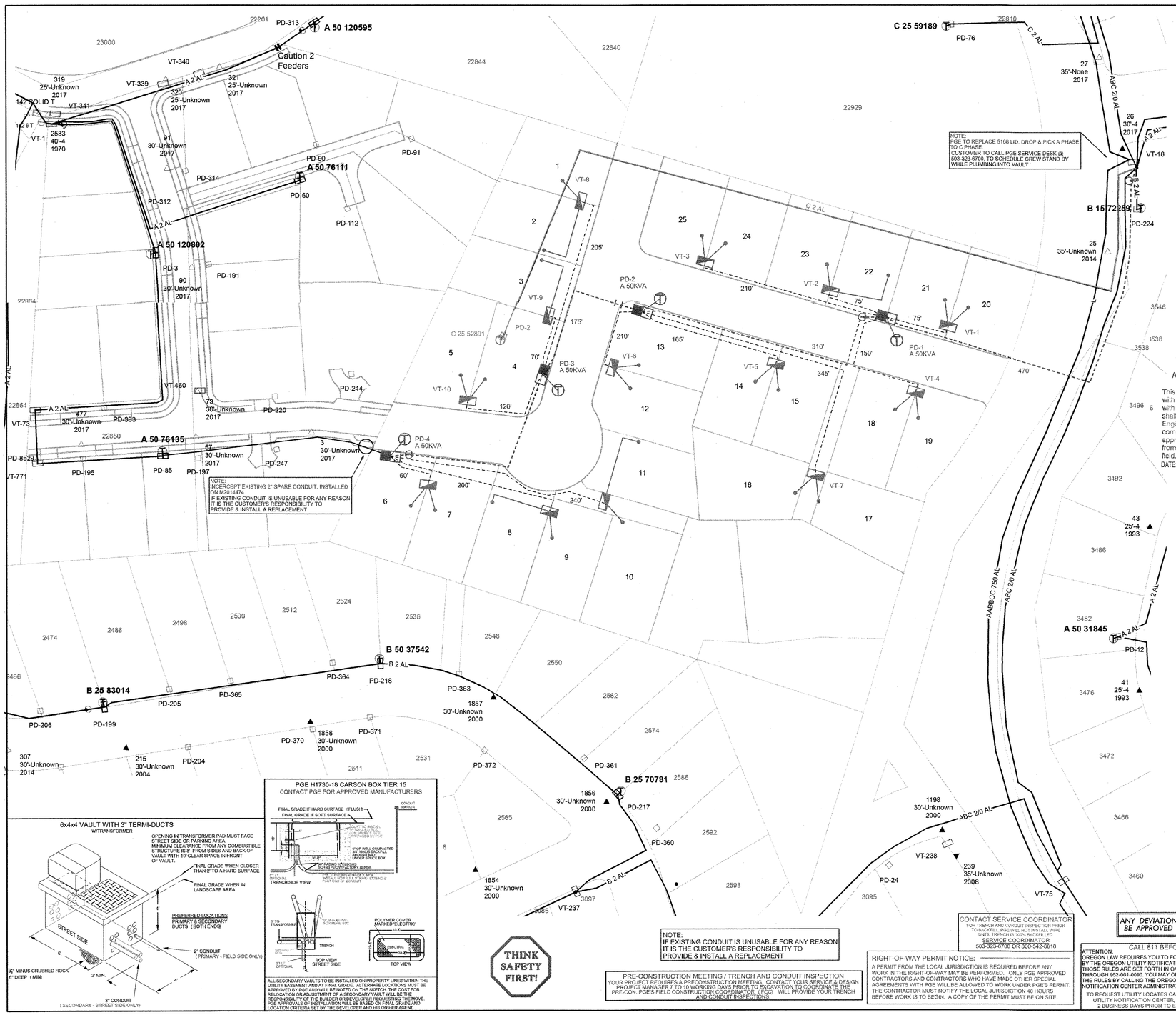

SUBDIVISION LEGEND

NEW PGE FACILITIES TO BE INSTALLED

(UNLESS OTHERWISE SPECIFIED)

- INSTALL FACILITIES
- FACILITIES IN GREEN ARE TO BE REMOVED
- 644-PGE PADMOUNT VAULT WITH 64-332P-2125-PGE TOP PROVIDED & INSTALLED BY CUSTOMER
- FAULT INDICATOR
- 1730 SECONDARY VAULT PROVIDED & INSTALLED BY CUSTOMER
- INSTALL 1-#2 AL-EPR JKT PRIMARY IN 1-2" PVC CONDUIT PROVIDED & INSTALLED BY CUSTOMER
- INSTALL 1-#350 AL-TX SECONDARY IN 1-3" PVC CONDUIT PROVIDED & INSTALLED BY CUSTOMER
- CUSTOMER TO INSTALL 3" PVC CONDUIT & STUB-UP FOR FUTURE 1-4/0 AL-TX SERVICE

PD-1
INSTALL:
A Ø 50KVA (A)
PAD MT
7200V, 120/240V, 1 Ø, 3W
8 CUSTOMERS
LOAD: 40KW

PD-2
INSTALL:
A Ø 50KVA (A)
PAD MT
7200V, 120/240V, 1 Ø, 3W
6 CUSTOMERS
LOAD: 30KW

PD-3
INSTALL:
A Ø 50KVA (A)
PAD MT
7200V, 120/240V, 1 Ø, 3W
5 CUSTOMERS
LOAD: 25KW

PD-4
INSTALL:
A Ø 50KVA (A)
PAD MT
7200V, 120/240V, 1 Ø, 3W
6 CUSTOMERS
LOAD: 30KW

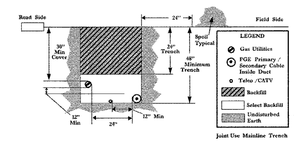

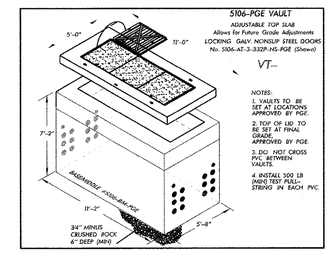

APPROVED FOR CONSTRUCTION BY CITY OF WEST LINN

This approval is only for general conformance with the design concept and general compliance with applicable codes and requirements and shall not be construed as relieving the Design Engineer of full responsibility for accuracy and completeness of the drawings. This plan review approval does not prevent the City from requiring further code corrections in the field.

DATE: 4/22/2020

CONSTRUCTION NOTES: RSDEV

1. CUSTOMER TO PROVIDE ALL TRENCHING AND BACKFILLING. JOINT USE TRENCH WITH GAS. TRENCH TO BE 48 INCHES DEEP AND 30 INCHES WIDE, MEASURED FROM FINAL GRADE.
   ALL PGE CONDUCTORS TO BE INSTALLED IN GRAY, SCHEDULE 40, ELECTRICAL GRADE, PVC CONDUIT. CROSSINGS TO BE 48 INCHES DEEP, MEASURED FROM FINAL GRADE.
   PGE TO DETERMINE THE SIZE AND NUMBER OF CONDUITS REQUIRED.
   MAINTAIN 12 VERTICAL INCHES AND 24 HORIZONTAL INCHES CLEARANCE BETWEEN GAS AND OTHER UTILITIES. ALL ELBOWS 4 INCHES SMALLER TO BE 36 INCH RADIUS.
   ALL BENDS MUST BE FACTORY MADE. ALL ELBOWS LARGER THAN 4 INCH TO BE SWEEPS OR FACTORY MADE. ALL BENDS MUST BE MADE WITH TOOLS REQUIRED FOR GIVEN SIZE OF PIPE. NO BEND CAN EXCEED 36 FOR ANY LENGTH NOR MORE THAN 180 DEGREES IN BENDS. PVC SCHEDULE 40 BENDS ARE ACCEPTABLE FOR RUNS OF 180 FEET OR LESS. THE MAXIMUM TOTAL BENDS IN ANY CONDUIT RUN IS 270 DEGREES.
2. A PGE STANDBY CREW IS REQUIRED FOR OPENING ALL ENERGIZED PGE VAULTS, JUNCTION BOXES, AND EQUIPMENT/FACILITIES, INCLUDING CONNECTION OR INSTALLATION OF CONDUITS AND PULL STRINGS. CALL SERVICE COORDINATION AT 503-323-6700 TO SCHEDULE A PGE STANDBY CREW.
3. CUSTOMER RESPONSIBLE FOR ROAD CROSSINGS. ALL CROSSINGS MUST EXTEND FROM PROPERTY LINE TO PROPERTY LINE. USE ONLY GRAY SCHEDULE 40, ELECTRICAL GRADE, PVC CONDUIT. CROSSINGS TO BE 48 INCHES DEEP, MEASURED FROM FINAL GRADE.
4. DIRECTIONAL BORING REQUIREMENTS: BLACK HDPE (HIGH DENSITY POLYETHYLENE) DUCT OR SCHEDULE 40 PVC WITH A MECHANICAL CONNECTION (CERTA-LOK OR LIKE MECHANICAL CONNECTION PRODUCT) AS AN ALTERNATIVE TO HDPE DUCT. HDPE SHALL MEET THE REQUIREMENTS OF PGE SPECIFICATION U2201 (AVAILABLE ON REQUEST FROM PGE PROJECT MANAGER). FOR SAFETY PURPOSES THE DUCT SHALL BE BLACK WITH THREE EQUALLY SPACED YELLOW STRIPES. THE DUCT SHALL BE PRESSURE TEST PROVEN TO 100 PSI. TEST OF HDPE PIPE IS REQUIRED AFTER INSTALLATION WITH PGE INSPECTOR PRESENT.
5. CUSTOMER TO PROVIDE AND INSTALL #644-PGE VAULT WITH #64-332P-2125 COVER, UTILITY VAULT MODEL OR EQUIVALENT FOR PGE PAD MOUNT TRANSFORMERS. PADVAULT TO BE SET AT FINAL GRADE (SEE DETAIL ON SKETCH) .
6. ALL PGE TRANSFORMERS TO BE INSTALLED 8 FEET (MIN) FROM ANY COMBUSTIBLE BUILDING, WALL OR OVERHANG AND 4 FEET (MIN) FROM ANY FIRE HYDRANT. PGE TRANSFORMERS MUST BE WITHIN 15 FEET OF A DRIVEABLE AREA. ALWAYS MAINTAIN 10 FEET CLEARANCE IN FRONT OF ALL TRANSFORMERS.
7. STEEL BARRIER POSTS ARE REQUIRED AROUND TRANSFORMERS THAT ARE EXPOSED TO VEHICLES.
8. ALL SWITCH VAULTS TO BE SET AT FINAL GRADE WITH 6 INCH GRAVEL BASE AND CONDUITS ALIGNED TO ENTER THE VAULT END LOWER KNOCKOUTS (TERM-A-DUCTS) . (SEE DETAIL ON SKETCH)
9. FRONT LOT PUBLIC UTILITY EASEMENT (P.U.E.) TO BE 8 FEET (MIN) , 10 FEET (PREFERRED)
10. ESTIMATED 100AMPS MOTOR STARTING CURRENT FOR FLICKER CALCULATIONS. TRANSFORMER LOADING AND VOLTAGE DROP CALCULATIONS BASED ON 00 KW PER RESIDENCE.
11. CONSULT WITH PGE REPRESENTATIVE 2 WEEKS BEFORE STARTING MAIN POWER TRENCHING FOR A PRECONSTRUCTION CONFERENCE. INCLUDED IN THIS CONFERENCE WILL BE EXCAVATOR, PGE, TELCO, CATV, AND GAS.
12. DESIGN IS BASED ON STANDARD UNDERGROUND EQUIPMENT. NON-STANDARD UNDERGROUND EQUIPMENT MAY BE AN OPTION AT AN ADDITIONAL COST TO THE CUSTOMER.

PRE-CONSTRUCTION MEETING / TRENCH AND CONDUIT INSPECTION
YOUR PROJECT REQUIRES A PRECONSTRUCTION MEETING. CONTACT YOUR SERVICE & DESIGN PROJECT MANAGER 7 TO 10 WORKING DAYS PRIOR TO EXCAVATION TO COORDINATE THE PRE-CON. PGE'S FIELD CONSTRUCTION COORDINATOR (FCC) WILL PROVIDE YOUR TRENCH AND CONDUIT INSPECTIONS.

RIGHT-OF-WAY PERMIT NOTICE:
A PERMIT FROM THE LOCAL JURISDICTION IS REQUIRED BEFORE ANY WORK IN THE RIGHT-OF-WAY MAY BE PERFORMED. ONLY PGE APPROVED CONTRACTORS AND CONTRACTORS WHO HAVE MADE OTHER SPECIAL AGREEMENTS WITH PGE WILL BE ALLOWED TO WORK UNDER PGE'S PERMIT. THE CONTRACTOR MUST NOTIFY THE LOCAL JURISDICTION 48 HOURS BEFORE WORK IS TO BEGIN. A COPY OF THE PERMIT MUST BE ON SITE.

CONTACT SERVICE COORDINATOR
FOR: TRENCH AND CONDUIT INSPECTION PRIOR TO BACKFILL. PGE WILL NOT INSTALL WIRE UNTIL TRENCH IS 100% BACKFILLED
SERVICE COORDINATOR
503-323-6700 OR 800-542-6818

ANY DEVIATION FROM THIS DESIGN MUST BE APPROVED BY PGE PROJECT MANAGER

CALL 811 BEFORE YOU DIG
ATTENTION:
OREGON LAW REQUIRES YOU TO FOLLOW RULES ADOPTED BY THE OREGON UTILITY NOTIFICATION CENTER. THOSE RULES ARE SET FORTH IN OAR 952-001-0010 THROUGH 952-001-0090. YOU MAY OBTAIN COPIES OF THE RULES BY CALLING THE OREGON UTILITY NOTIFICATION CENTER ADMINISTRATION @ (503-232-1987)
TO REQUEST UTILITY LOCATES CALL THE OREGON UTILITY NOTIFICATION CENTER, 811 AT LEAST 2 BUSINESS DAYS PRIOR TO EXCAVATION.
811 Know what's below. Call before you dig.

PGE FACILITIES NOT DRAWN TO SCALE
THIS DRAWING IS A GRAPHICAL REPRESENTATION OF PORTLAND GENERAL ELECTRIC FACILITIES IN THE FIELD. THIS MAP ILLUSTRATES ELECTRICAL CONNECTIVITY, TYPES AND NUMBERS OF CONDUCTORS AND PLACEMENT OF EQUIPMENT WITHIN THE DISTRIBUTION SYSTEM. IT IS RECOMMENDED THAT THE USER NOT RELY ON THIS DIAGRAM FOR GEOGRAPHICAL LOCATIONS

PGE CONSTRUCTION DRAWING

DATE: 02/21/2020	SCALE: NTS	ACCOUNT: 1070001	AWO: 1000004597	JOB NO: M2849593
PGE	TITLE: Toll West Coast, LLC		
	CIRCUIT: SULLIVAN - SALAMO		SIZE: 22x34
	LOCATION: 23190 Bland Circle, WEST LINN		
	DESCRIPTION: Provide power to lot subdivision		
BEAVERTON LINE CREW CENTER 2270 SW 153RD DR. BEAVERTON, OR 97006	COUNTY: CLACKAMAS	SECTION / TS: D21-3SA	WORK WITH	SHEET 1 OF 1
	DESIGN BY: JOSE MARQUEZ	PHONE (503) 672-5452	DRAWN BY: PENKA TANTILOVA	

PRELIMINARY

© PORTLAND GENERAL ELECTRIC CO. - ALL RIGHTS RESERVED

23190 BLAND CIRCLE
SUBDIVISION
TAX MAP 2S1E 35AB
TAX LOT 9100
CITY OF WEST LINN, OREGON

PGE UTILITY PLAN

REVISIONS

NO.	DATE	DESCRIPTION
0	02/19	PLANNING SUBMITTAL
1	08/19	PLANNING RESUBMITTAL
2	10/19	ENGNEERING 1ST SUBMITTAL
3	03/20	ENGNEERING 2ND SUBMITTAL

EMERIO Design
6445 SW FALLBROOK PLACE, SUITE 100
BEAVERTON, OR 97008
TEL: (503) 746-8812
FAX: (503) 639-9592
www.emeriodesign.com

SHEET 31 OF 31

FILE P: \0542-001 23190 S Bland Circle \dwg \civil \Engineering Set \0542-001_31bdl, Layout: 31 PGE UTILITY PLAN, Plot Date: 5/22/2020 3:39 PM, by: Josh Ayers

DocuSign Envelope ID: CFBE966A-192B-4378-9E32-B4C08CAC394B

BLAND CIRCLE SUBDIVISION

25 LOT SUBDIVISION
NW 1/4 NE 1/4 SECTION 35, T. 2S, R. 1E, W.M.
CITY OF WEST LINN, OREGON

STANDARD EROSION AND SEDIMENT CONTROL PLAN DRAWING NOTES:

1. Hold a pre–construction meeting of project construction personnel that includes the inspector to discuss erosion and sediment control measures and construction limits. (Schedule A.8.c.i.(3))
2. All inspections must be made in accordance with DEQ 1200–C permit requirements. (Schedule A.12.b and Schedule B.1)
3. Inspection logs must be kept in accordance with DEQ's 1200–C permit requirements. (Schedule B.1.c and B.2)
4. Retain a copy of the ESCP and all revisions on site and make it available on request to DEQ, Agent, or the local municipality. During inactive periods of greater than seven (7) consecutive calendar days, the above records must be retained by the permit registrant but do not need to be at the construction site. (Schedule B.2.c)
5. All permit registrants must implement the ESCP. Failure to implement any of the control measures or practices described in the ESCP is a violation of the permit. (Schedule A 8.a)
6. The ESCP must be accurate and reflect site conditions. (Schedule A.12.c.i)
7. Submission of all ESCP revisions is not required. Submittal of the ESCP revisions is only under specific conditions. Submit all necessary revision to DEQ or Agent within 10 days. (Schedule A.12.c.iv. and v)
8. Phase clearing and grading to the maximum extent practical to prevent exposed inactive areas from becoming a source of erosion. (Schedule A 7.a.iii)
9. Identify, mark, and protect (by construction fencing or other means) critical riparian areas and vegetation including important trees and associated rooting zones, and vegetation areas to be preserved. Identify vegetative buffer zones between the site and sensitive areas (e.g., wetlands), and other areas to be preserved, especially in perimeter areas. (Schedule A.8.c.i.(1) and (2))
10. Preserve existing vegetation when practical and re–vegetate open areas. Re–vegetate open areas when practicable before and after grading or construction. Identify the type of vegetative seed mix used. (Schedule A.7.a.v)
11. Maintain and delineate any existing natural buffer within the 50–feet of waters of the state. (Schedule A.7.b.i.and (2(a)(b))
12. Install perimeter sediment control, including storm drain inlet protection as well as all sediment basins, traps, and barriers prior to land disturbance. (Schedule A.8.c.i.(5))
13. Control both peak flow rates and total stormwater volume, to minimize erosion at outlets and downstream channels and streambanks. (Schedule A.7.c)
14. Control sediment as needed along the site perimeter and at all operational internal storm drain inlets at all times during construction, both internally and at the site boundary. (Schedule A.7.d.i)
15. Establish concrete truck and other concrete equipment washout areas before beginning concrete work. (Schedule A.8.c.i.(6))
16. Apply temporary and/or permanent soil stabilization measures immediately on all disturbed areas as grading progresses. Temporary or permanent stabilizations measures are not required for areas that are intended to be left unvegetated, such as dirt access roads or utility pole pads.(Schedule A.8.c.ii.(3))
17. Establish material and waste storage areas, and other non–stormwater controls. (Schedule A.8.c.i.(7))
18. Prevent tracking of sediment onto public or private roads using BMPs such as: construction entrance, graveled (or paved) exits and parking areas, gravel all unpaved roads located onsite, or use an exit tire wash. These BMPs must be in place prior to land–disturbing activities. (Schedule A 7.d.ii and A.8.c.i(4))
19. When trucking saturated soils from the site, either use water–tight trucks or drain loads on site. (Schedule A.7.d.ii.(5))
20. Control prohibited discharges from leaving the construction site, i.e., concrete wash–out, wastewater from cleanout of stucco, paint and curing compounds. (Schedule A.6)
21. Use BMPs to prevent or minimize stormwater exposure to pollutants from spills; vehicle and equipment fueling, maintenance, and storage; other cleaning and maintenance activities; and waste handling activities. These pollutants include fuel, hydraulic fluid, and other oils from vehicles and machinery, as well as debris, fertilizer, pesticides and herbicides, paints, solvents, curing compounds and adhesives from construction operations. (Schedule A.7.e.i.(2))
22. Implement the following BMPs when applicable: written spill prevention and response procedures, employee training on spill prevention and proper disposal procedures, spill kits in all vehicles, regular maintenance schedule for vehicles and machinery, material delivery and storage controls, training and signage, and covered storage areas for waste and supplies. (Schedule A.7.e.iii.)
23. Use water, soil–binding agent or other dust control technique as needed to avoid wind–blown soil. (Schedule A 7.a.iv)
24. The application rate of fertilizers used to reestablish vegetation must follow manufacturer's recommendations to minimize nutrient releases to surface waters. Exercise caution when using time–release fertilizers within any waterway riparian zone. (Schedule A.9.b.iii)
25. If an active treatment system (for example, electro–coagulation, flocculation, filtration, etc.) for sediment or other pollutant removal is employed, submit an operation and maintenance plan (including system schematic, location of system, location of inlet, location of discharge, discharge dispersion device design, and a sampling plan and frequency) before operating the treatment system. Obtain plan approval before operating the treatment system. Operate and maintain the treatment system according to manufacturer's specifications. (Schedule A.9.d)
26. Temporarily stabilize soils at the end of the shift before holidays and weekends, if needed. The registrant is responsible for ensuring that soils are stable during rain events at all times of the year. (Schedule A 7.b)
27. As needed based on weather conditions, at the end of each workday soil stockpiles must be stabilized or covered, or other BMPs must be implemented to prevent discharges to surface waters or conveyance systems leading to surface waters. (Schedule A.7.e.ii.(2))
28. Construction activities must avoid or minimize excavation and bare ground activities during wet weather. (Schedule A.7.a.i)
29. Sediment fence: remove trapped sediment before it reaches one third of the above ground fence height and before fence removal.(Schedule A.9.c.i)
30. Other sediment barriers (such as biobags): remove sediment before it reaches two inches depth above ground height and before BMP removal. (Schedule A.9.c.i)
31. Catch basins: clean before retention capacity has been reduced by fifty percent. Sediment basins and sediment traps: remove trapped sediments before design capacity has been reduced by fifty percent and at completion of project. (Schedule A.9.c.iii & iv)
32. Within 24 hours, significant sediment that has left the construction site, must be remediated. Investigate the cause of the sediment release and implement steps to prevent a recurrence of the discharge within the same 24 hours. Any in–stream clean–up of sediment shall be performed according to the Oregon Division of State Lands required timeframe. (Schedule A.9.b.i)
33. The intentional washing of sediment into storm sewers or drainage ways must not occur. Vacuuming or dry sweeping and material pickup must be used to cleanup released sediments. (Schedule A.9.b.ii)
34. The entire site must be temporarily stabilized using vegetation or a heavy mulch layer, temporary seeding, or other method should all construction activities cease for 30 days or more. (Schedule A.7.f.i)
35. Provide temporary stabilization for that portion of the site where construction activities cease for 14 days or more with a covering of blown straw and a tackifier, loose straw, or an adequate covering of compost mulch until work resumes on that portion of the site. (Schedule A.7.f.ii)
36. Do not remove temporary sediment control practices until permanent vegetation or other cover of exposed areas is established. Once construction is complete and the site is stabilized, all temporary erosion controls and retained soils must be removed and disposed of properly, unless doing so conflicts with local requirements. (Schedule A.8.c.iii(1) and D.3.c.ii and iii)

LOCAL AGENCY-SPECIFIC EROSION CONTROL NOTES:

1. NONE

INSPECTION FREQUENCY

	SITE CONDITION	MINIMUM FREQUENCY
1.	ACTIVE PERIOD	DAILY WHEN STORMWATER RUNOFF, INCLUDING RUNOFF FROM SNOWMELT, IS OCCURRING. AT LEAST ONCE EVERY FOURTEEN (14) DAYS REGARDLESS OF WHETHER STORMWATER RUNOFF IS OCCURRING.
2.	PRIOR TO THE SITE BECOMING INACTIVE OR IN ANTICIPATION OF SITE INACCESSIBILITY.	ONCE TO ENSURE THAT EROSION AND SEDIMENT CONTROL MEASURES ARE IN WORKING ORDER. ANY NECESSARY MAINTENANCE AND REPAIR MUST BE MADE PRIOR TO LEAVING THE SITE.
3.	INACTIVE PERIODS GREATER THAN FOURTEEN (14) CONSECUTIVE CALENDAR DAYS.	ONCE EVERY MONTH.
4.	PERIODS DURING WHICH THE SITE IS INACCESSIBLE DUE TO INCLEMENT WEATHER.	IF PRACTICAL, INSPECTIONS MUST OCCUR DAILY AT A RELEVANT AND ACCESSIBLE DISCHARGE POINT OR
5.	PERIODS DURING WHICH DISCHARGE IS UNLIKELY DUE TO FROZEN CONDITIONS.	MONTHLY. RESUME MONITORING IMMEDIATELY UPON MELT, OR WHEN WEATHER CONDITIONS MAKE DISCHARGES LIKELY.

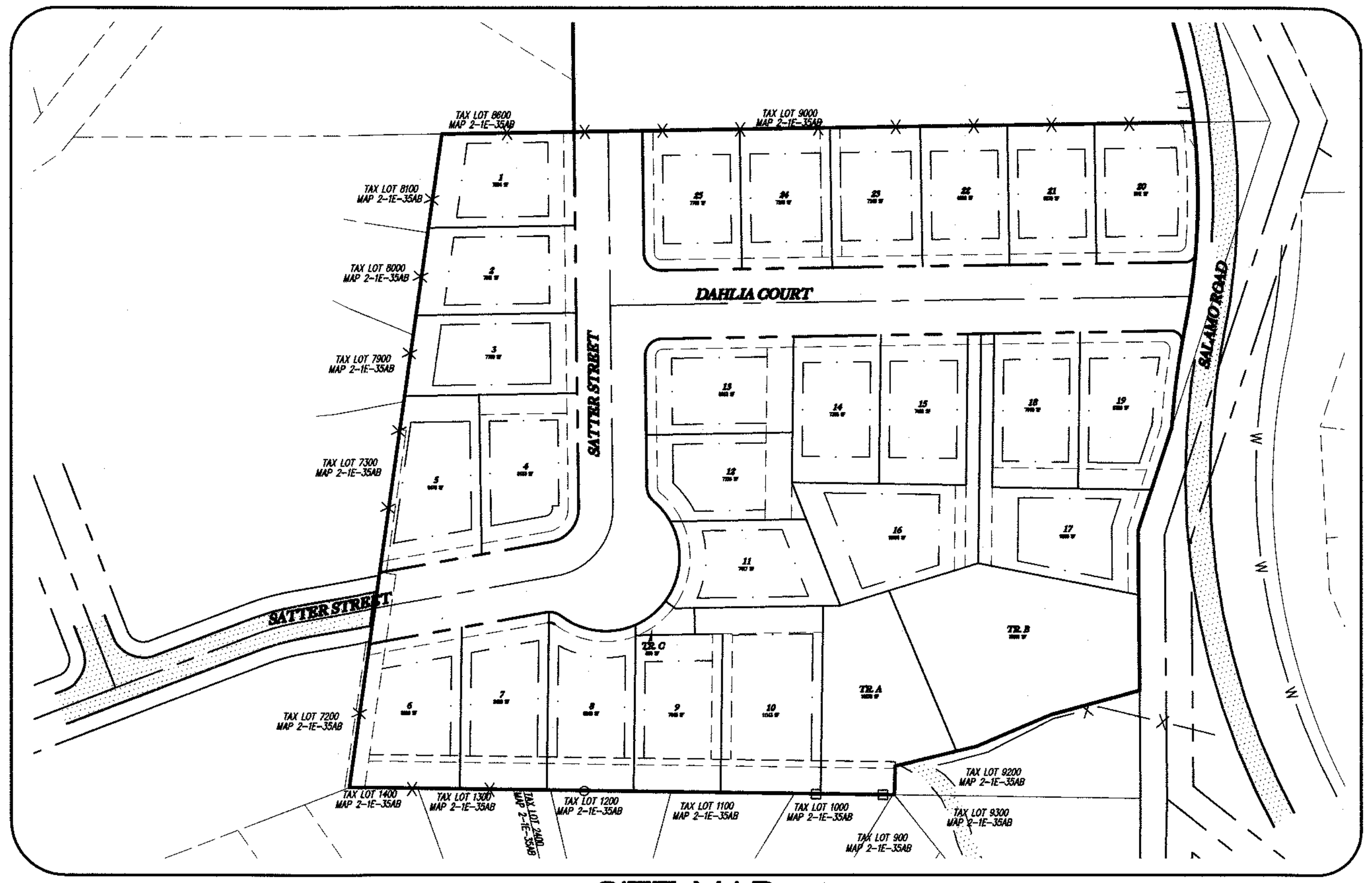

SITE MAP

SCALE: 1" = 100'

PROJECT CONTACTS

APPLICANT:
ROD FREISEN 22870 WEATHERHILL, LLC
WEST LINN, OR 97068 (971) 235-3314
ROD.FRIESEN@FRONTIER.COM

OWNER:
DAVID & DRUCILLA SLOOP
23190 BLAND CIRCLE
WEST LINN, OR 97068

LAND USE, CIVIL ENGINEER AND SURVEYOR:
EMERIO DESIGN, LLC
6445 SW FALLBROOK PL, SUITE 100
BEAVERTON, OR 97008
LAND USE CONTACT: STEVE MILLER
ENGINEER CONTACT: ERIC EVANS
SURVEYOR CONTACT: KING PHELPS
(503) 746-8812 (P)
(503) 639-9592 (F)

THE PERMITTEE IS REQUIRED TO MEET ALL THE CONDITIONS OF THE 1200C PERMIT. THIS ESCP AND GENERAL CONDITIONS HAVE BEEN DEVELOPED TO FACILITATE COMPLIANCE WITH THE 1200C PERMIT REQUIREMENTS. IN CASES OF DISCREPANCIES OR OMISSIONS, THE 1200C PERMIT REQUIREMENTS SUPERCEDE REQUIREMENTS OF THIS PLAN.

VICINITY MAP

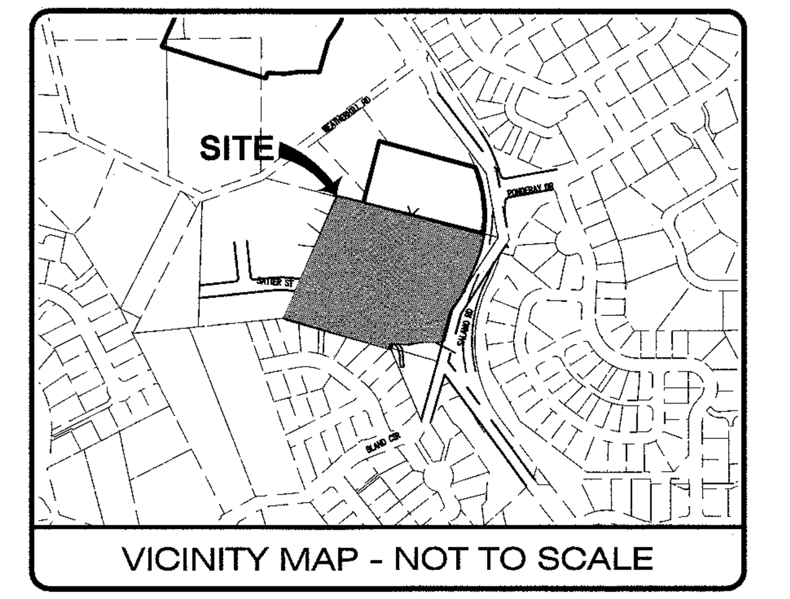

VICINITY MAP - NOT TO SCALE

PERMITEE'S SITE INSPECTOR

COMPANY/AGENCY: EMERIO DESIGN
CONTACT: LEIF RHOADES
PHONE: (503) 415-9459
FAX: (503) 639-9592
E-MAIL: LEIF@EMERIODESIGN.COM
DESCRIPTION OF EXPERIENCE: FOUR YEARS OF COMMERCIAL AND RESIDENTIAL CONSTRUCTION INSPECTION EXPERIENCE. CESCL CERTIFIED PROFESSIONAL ID# 81304

PROJECT LOCATION

BOUNDED ON THE SOUTHEAST BY SALAMO RD AND ON THE SOUTHWEST BY EXISTING DEVELOPMENT AND CRESTVIEW DR

LAT: 45.358523, LONG: -122.648758

PROPERTY DESCRIPTION

TAX LOT T2SR1E35AB, 9100, WEST LINN, CLACKAMAS COUNTY, OREGON

BMP MATRIX FOR CONSTRUCTION PHASES

REFER TO DEQ GUIDANCE MANUAL FOR A COMPREHENSIVE LIST OF AVAILABLE BMP'S.

	CLEARING	MASS GRADING	UTILITY INSTALLATION	STREET CONSTRUCTION	FINAL STABILIZATION	WET WEATHER (OCT. 1 – MAY 31ST)
EROSION PREVENTION						
PRESERVE NATURAL VEGETATION	X	X	X	X	X	X
GROUND COVER					X	X
HYDRAULIC APPLICATIONS					X	X
PLASTIC SHEETING	X	X				X
MATTING					X	X
DUST CONTROL	X	X	X	X	X	X
TEMPORARY/ PERMANENT SEEDING		X	X	X	X	X
BUFFER ZONE	X	X	X	X	X	X
OTHER:						
SEDIMENT CONTROL						
SEDIMENT FENCE (PERIMETER)	** X	X	X	X	X	X
SEDIMENT FENCE (INTERIOR)			X	X	X	X
STRAW WATTLES						X
FILTER BERM						
INLET PROTECTION	** X	X	X	X	X	X
DEWATERING						
SEDIMENT TRAP						
OTHER:						
RUN OFF CONTROL						
CONSTRUCTION ENTRANCE	** X	X	X			X
PIPE SLOPE DRAIN						
OUTLET PROTECTION			X	X	X	X
SURFACE ROUGHENING					X	X
CHECK DAMS						
OTHER:						
POLLUTION PREVENTION						
PROPER SIGNAGE	X	X	X	X	X	X
HAZ WASTE MGMT	X	X	X	X	X	X
SPILL KIT ON-SITE	X	X	X	X	X	X
CONCRETE WASHOUT AREA	X	X	X	X	X	X

**SIGNIFIES BMP THAT WILL BE INSTALLED PRIOR TO ANY GROUND DISTURBING ACTIVITY

* HOLD A PRE-CONSTRUCTION MEETING OF PROJECT CONSTRUCTION PERSONNEL THAT INCLUDES THE INSPECTOR TO DISCUSS EROSION AND SEDIMENT CONTROL MEASURES AND CONSTRUCTION LIMITS. (Schedule A.8.c.i.(3))
* ALL INSPECTIONS MUST BE MADE IN ACCORDANCE WITH DEQ 1200-C PERMIT REQUIREMENTS.
* INSPECTION LOGS MUST BE KEPT IN ACCORDANCE WITH DEQ'S 1200-C PERMIT REQUIREMENTS.
* RETAIN A COPY OF THE ESCP AND ALL REVISIONS ON SITE AND MAKE IT AVAILABLE ON REQUEST TO DEQ, AGENT, OR THE LOCAL MUNICIPALITY. DURING INACTIVE PERIODS OF GREATER THAN SEVEN (7) CONSECUTIVE CALENDAR DAYS, RETAIN THE ESCP AT THE CONSTRUCTION SITE OR AT ANOTHER LOCATION. (Schedule B.2.a)

NARRATIVE DESCRIPTIONS

EXISTING SITE CONDITIONS
- 1 SINGLE FAMILY HOME WITH BARN, TWO DRIVEWAYS ON ACREAGE WITH SLOPE AND TREES

DEVELOPED SITE CONDITIONS
- 25 LOT RESIDENTIAL SUBDIVISION WITH WATER QUALITY FACILITY AND GREEN SPACE

NATURE OF CONSTRUCTION ACTIVITY AND TIME TABLE FOR MAJOR ACTIVITIES
- CLEARING AND GRUBBING ()
- MASS GRADING (EXCAVATION AND FILL) ()
- STREET AND UTILITY CONSTRUCTION ()
- FINAL STABILIZATION ()

TOTAL SITE AREA = 6.52 ACRES
TOTAL ON-SITE DISTURBED AREA = 6.52 ACRES
TOTAL ON-SITE UNDISTURBED = 0 ACRES
TOTAL OFF-SITE DISTURBED AREA = 0.0638 ACRES

SITE SOIL CLASSIFICATION
- CLACKAMAS SILT LOAM — HAZARD OF EROSION: SLIGHT
- HUBERLY SILT LOAM — HAZARD OF EROSION: SLIGHT
- SAUM SILT LOAM, 3-8% — HAZARD OF EROSION: SLIGHT
- NO OFFSITE MATERIALS PROPOSED

RECEIVING WATER BODY
- EDA CREEK (CLACKAMAS RIVER)

NOTICE TO EXCAVATORS:
ATTENTION: OREGON LAW REQUIRES YOU TO FOLLOW RULES ADOPTED BY THE OREGON UTILITY NOTIFICATION CENTER. THOSE RULES ARE SET FORTH IN OAR 952-001-0010 THROUGH OAR 952-001-0090. YOU MAY OBTAIN COPIES OF THE RULES BY CALLING THE CENTER.
(NOTE: THE TELEPHONE NUMBER FOR THE OREGON UTILITY NOTIFICATION CENTER IS (503)-232-1987).

POTENTIAL UNDERGROUND FACILITY OWNERS

Dig Safely.
Call the Oregon One-Call Center
DIAL 811 or 1-800-332-2344

EMERGENCY TELEPHONE NUMBERS

NW NATURAL GAS	
M-F 7am-6pm	1-800-882-3377
AFTER HOURS	503-226-4211
PGE	503-464-7777
CENTURY LINK	1-877-348-9005
COMCAST	1-855-884-3917
CITY OF WEST LINN ENGINEERING	503 722-5500
WEST LINN WATER DEPT. (EMERGENCY)	503-656-6081
AFTER HOURS (EMERGENCY)	503-635-0238
WEST LINN NON-EMERGENCY	503-742-8609

SHEET INDEX

NO.	TITLE
EC1	1200-C COVER SHEET
EC2	DEMOLITION AND EROSION & SEDIMENT CONTROL PLAN
EC3	GRADING STREET UTILITY EROSION & SEDIMENT CONTROL PLAN
EC4	EROSION AND SEDIMENT CONTROL DETAILS
EC5	EROSION AND SEDIMENT CONTROL DETAILS

RATIONALE STATEMENT

A COMPREHENSIVE LIST OF AVAILABLE BEST MANAGEMENT PRACTICES (BMP) OPTIONS BASED ON DEQ's GUIDANCE MANUAL HAS BEEN REVIEWED TO COMPLETE THIS EROSION AND SEDIMENT CONTROL PLAN. SOME OF THE ABOVE LISTED BMP's WERE NOT CHOSEN BECAUSE THEY WERE DETERMINED TO NOT EFFECTIVELY MANAGE EROSION PREVENTION AND SEDIMENT CONTROL FOR THIS PROJECT BASED ON SPECIFIC SITE CONDITIONS, INCLUDING SOIL CONDITIONS TOPOGRAPHIC CONSTRAINTS, ACCESSIBILITY TO THE SITE, AND OTHER RELATED CONDITIONS, AS THE PROJECT PROGRESSES AND THERE IS A NEED TO REVISE THE ESC PLAN, AN ACTION PLAN WILL BE SUBMITTED.

INITIAL ____________________

APPROVED FOR CONSTRUCTION BY CITY OF WEST LINN
This approval is only for general conformance with the design concept and general compliance with applicable codes and requirements and shall not be construed as relieving the Design Engineer of full responsibility for accuracy and completeness of the drawings. This plan review approval does not prevent the City from requiring further code corrections in the field.
DATE: 6/22/2020 BY: [signature]

REGISTERED PROFESSIONAL ENGINEER 54665 OREGON — ERIC DANIEL EVANS — DocuSigned by: Eric D. Evans 936474C69EA2449... — EXPIRES: 12/31/2021

23190 BLAND CIRCLE SUBDIVISION
TAX MAP 2S1E 35AB
TAX LOT 9100
CITY OF WEST LINN, OREGON

1200C PERMIT SET
COVER SHEET

REVISIONS

NO.	DATE	DESCRIPTION
0	02/19	PLANNING 1ST SUBMITTAL
1	10/19	ENGINEERING 1ST SUBMITTAL
2	03/20	ENGINEERING 2ND SUBMITTAL
3	04/20	1200-C REVISION

EMERIO Design
6445 SW FALLBROOK PLACE, SUITE 100
BEAVERTON, OREGON 97008
TEL: (503) 746-8812
FAX: (503) 639-9592
www.emeriodesign.com

SHEET EC1 OF EC5

FILE:P:\0542-001 23190 S Bland Circle\dwg\civ\Engineering Set\0542-001_ersl, Layout: COVER SHEET, Plot Date: 5/22/2020 3:39 PM, by: Josh Ayers

DocuSign Envelope ID: CFBE966A-192B-4378-9E32-B4C08CAC394B

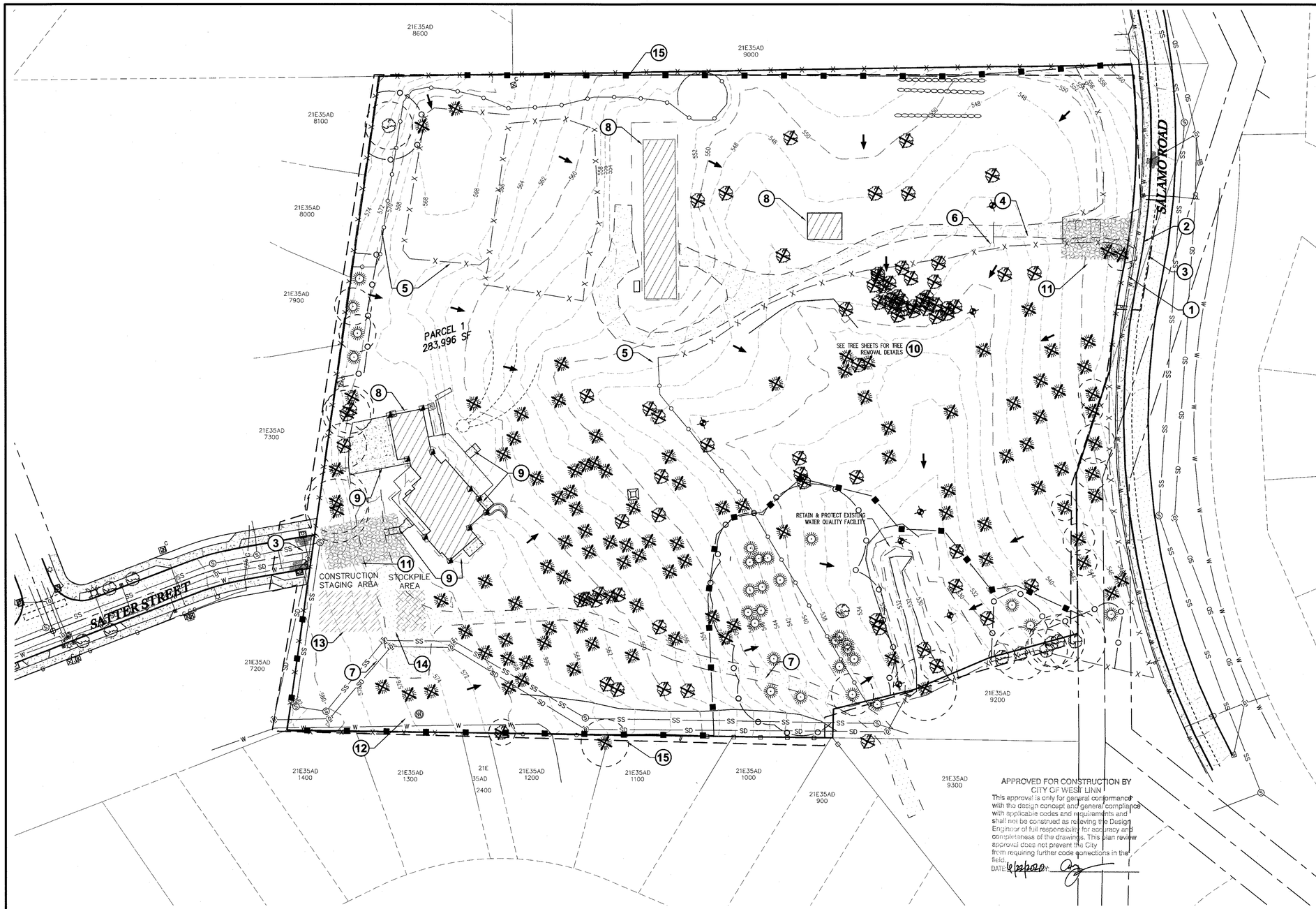

LEGEND

- BOUNDARY OF SITE
- ADJOINING OR INTERIOR PROPERTY LINE
- RIGHT-OF-WAY CENTERLINE
- EXISTING CURB LINE
- EXISTING BUILDING LINE
- EXISTING DECIDUOUS TREE
- EXISTING EVERGREEN TREE
- EXISTING FIRE HYDRANT
- EXISTING WATER VALVE
- EXISTING WATER METER
- EXISTING STORM STRUCTURE
- EXISTING STORM MANHOLE
- EXISTING UTILITY POLE
- BIO-FILTER BAG
- W — W EXISTING WATER LINE
- SS — SS SANITARY SEWER LINE
- SD STORM DRAIN LINE
- G — G GAS LINE
- X — X EXISTING FENCE
- SILT FENCE
- TREE PROTECTION FENCE
- LIMITS OF CONSTRUCTION
- FLOW ARROW
- STAGING AREA
- STOCKPILE AREA, WITH PLASTIC SHEETING AS NECESSARY DURING WET WEATHER
- CONSTRUCTION ENTRANCE
- REMOVE TREE – TAG ALL TREES TO BE REMOVED

DEMOLITION KEY NOTES

1. REMOVE AND REPLACE SPEED LIMIT SIGN 25' SOUTH ALONG SALAMO RD.
2. REMOVE EXISTING SIDEWALK & GUTTER
3. SAWCUT & REMOVE EXISTING AC.
4. REMOVE EXISTING AC & GRAVEL DRIVEWAY.
5. REMOVE EXISTING FENCING.
6. REMOVE EXISTING CULVERT.
7. REMOVE EXISTING AC DRIVEWAY UP TO LOT LINE.
8. REMOVE EXISTING BUILDING/STRUCTURE
9. REMOVE EXISTING CONCRETE AREAS
10. REMOVE EXISTING TREES (TYP.).
11. INSTALL GRAVEL CONSTRUCTION ENTRANCE, DETAILS & SHEET
12. REMOVE EXISTING WELL
13. CONSTRUCTION STAGING AREA
14. CONSTRUCTION STOCKPILE AREA, DETAIL SHEET
15. INSTALL SILT FENCE, DETAIL SHEET

40' 0 20' 40' 80'
SCALE: 1" = 40'

PRE-CONSTRUCTION, CLEARING, AND DEMOLITION NOTES:

1. ALL BASE ESC MEASURES (INLET PROTECTION, PERIMETER SEDIMENT CONTROL, GRAVEL CONSTRUCTION ENTRANCES, ETC.) MUST BE IN PLACE, FUNCTIONAL, AND APPROVED IN AN INITIAL INSPECTION, PRIOR TO COMMENCEMENT OF CONSTRUCTION ACTIVITIES.
2. SEDIMENT BARRIERS APPROVED FOR USE INCLUDE SEDIMENT FENCE, BERMS CONSTRUCTED OUT OF MULCH, CHIPPINGS, OR OTHER SUITABLE MATERIAL, STRAW WATTLES, OR OTHER APPROVED MATERIALS.
3. SENSITIVE RESOURCES INCLUDING, BUT NOT LIMITED TO, TREES, WETLANDS, AND RIPARIAN PROTECTION AREAS SHALL BE CLEARLY DELINEATED WITH ORANGE CONSTRUCTION FENCING OR CHAIN LINK FENCING IN A MANNER THAT IS CLEARLY VISIBLE TO ANYONE IN THE AREA. NO ACTIVITIES ARE PERMITTED TO OCCUR BEYOND THE CONSTRUCTION BARRIER.
4. CONSTRUCTION ENTRANCES SHALL BE INSTALLED AT THE BEGINNING OF CONSTRUCTION AND MAINTAINED FOR THE DURATION OF THE PROJECT. ADDITIONAL MEASURES INCLUDING, BUT NOT LIMITED TO, STREET SWEEPING, AND VACUUMING, MAY BE REQUIRED TO INSURE THAT ALL PAVED AREAS ARE KEPT CLEAN FOR THE DURATION OF THE PROJECT.
5. RUN-ON AND RUN-OFF CONTROLS SHALL BE IN PLACE AND FUNCTIONING PRIOR TO BEGINNING SUBSTANTIAL CONSTRUCTION ACTIVITIES. RUN-ON AND RUN-OFF CONTROL MEASURES INCLUDE: SLOPE DRAINS (WITH OUTLET PROTECTION), CHECK DAMS, SURFACE ROUGHENING, AND BANK STABILIZATION.

THESE EROSION AND SEDIMENT CONTROL PLANS ASSUME "DRY WEATHER" CONSTRUCTION. "WET WEATHER" CONSTRUCTION MEASURES NEED TO BE APPLIED BETWEEN OCTOBER 1ST AND MAY 31ST.

♦ NOTE: PRE-DEVELOPED RUN-OFF SHEET FLOWS EASTERLY INTO ON-SITE DRAINAGE AND NORTHERLY ONTO ADJACENT PROPERTIES.

23190 BLAND CIRCLE SUBDIVISION
TAX MAP 2S1E 35AB
TAX LOT 9100
CITY OF WEST LINN, OREGON

1200C PERMIT SET
EXISTING CONDITIONS & DEMO PLAN

REVISIONS

NO.	DATE	DESCRIPTION
0	02/19	PLANNING 1ST SUBMITTAL
1	10/19	ENGINEERING 1ST SUBMITTAL
2	03/20	ENGINEERING 2ND SUBMITTAL
3	04/20	1200-C REVISION

EMERIO Design
6445 SW FALLBROOK PLACE, SUITE 100
BEAVERTON, OREGON 97008
TEL: (503) 746-8812
FAX: (503) 639-9592
www.emeriodesign.com

REGISTERED PROFESSIONAL ENGINEER 54665 DocuSigned by: Eric D Evans 9D47A5BBA24BB... JULY 11, 2020 ERIC DANIEL EVANS
EXPIRES: 12/31/2021

SHEET EC2 OF EC5

FILE:P:\0542-001 23190 S Bland Circle\dwg\civil\Engineering Set\0542-001_es2, Layout: EXISTING CONDITIONS & DEMO PLAN, Plot Date: 5/22/2020 3:39 PM, by: Josh Ayers

DocuSign Envelope ID: CFBE966A-192B-4378-9E32-B4C08CAC394B

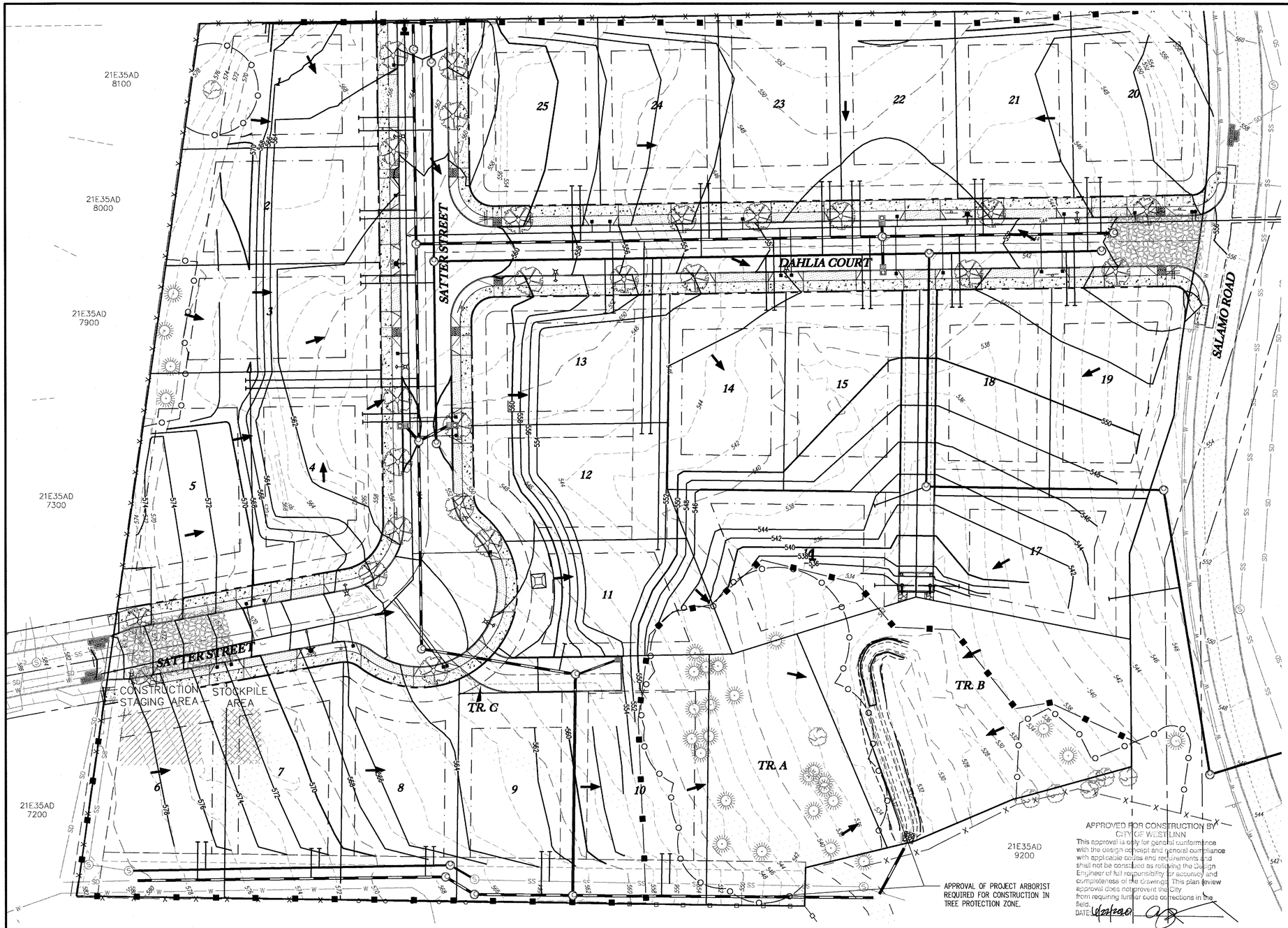

LEGEND

- 220 — PROPOSED MAJOR CONTOUR LINE
- 219 — PROPOSED MINOR CONTOUR LINE
- 195 — EXISTING MAJOR CONTOUR LINE
- 194 — EXISTING MINOR CONTOUR LINE
- PROPERTY BOUNDARY LINE
- SIGNIFICANT RESOURCE OVERLAY ZONE (SROZ)
- PROPOSED LOT LINE
- PROPOSED RIGHT-OF-WAY LINE
- PROPOSED PUE EASEMENT
- PROPOSED SANITARY SEWER LINE
- PROPOSED STORM DRAIN LINE
- PROPOSED WATER LINE
- CONSTRUCTION TREE PROTECTION FENCE (6' HIGH CHAIN LINK WITH METAL POSTS)
- SILT FENCE
- PROPOSED SANITARY SEWER MANHOLE
- PROPOSED STORM DRAIN MANHOLE
- DIRECTION OF STORMWATER FLOW
- GRAVEL CONSTRUCTION ENTRANCE
- STOCKPILE AREA (COVER WITH PLASTINC SHEETING, AS NECESSARY)
- CONSTRUCTION STAGING AREA
- BIO-FILTER BAG
- CONCRETE WASHOUT

GRADING, STREET AND UTILITY EROSION AND SEDIMENT CONSTRUCTION NOTES:

1. USED FOR TEMPORARY OR PERMANENT SEEDING SHALL BE COMPOSED OF ONE OF THE FOLLOWING MIXTURES, UNLESS OTHERWISE AUTHORIZED:
   A. VEGETATED CORRIDOR AREAS REQUIRE NATIVE SEED MIXES. SEE RESTORATION PLAN FOR APPROPRIATE SEED MIX.
   B. DWARF GRASS MIX (MIN. 100 LB./AC.)
      1. DWARF PERENNIAL RYEGRASS (80% BY WEIGHT)
      2. CREEPING RED FESCUE (20% BY WEIGHT)
   C. STANDARD HEIGHT GRASS MIX (MIN. 100LB./AC.)
      1. ANNUAL RYEGRASS (40% BY WEIGHT)
      2. TURF-TYPE FESCUE (60% BY WEIGHT)
2. SLOPE TO RECEIVE TEMPORARY OR PERMANENT SEEDING SHALL HAVE THE SURFACE ROUGHENED BY MEANS OF TRACK-WALKING OR THE USE OF OTHER APPROVED IMPLEMENTS. SURFACE ROUGHENING IMPROVES SEED BEDDING AND REDUCES RUN-OFF VELOCITY.
3. LONG TERM SLOPE STABILIZATION MEASURES SHALL INCLUDE THE ESTABLISHMENT OF PERMANENT VEGETATIVE COVER VIA SEEDING WITH APPROVED MIX AND APPLICATION RATE.
4. TEMPORARY SLOPE STABILIZATION MEASURES SHALL INCLUDE: COVERING EXPOSED SOIL WITH PLASTIC SHEETING, STRAW MULCHING, WOOD CHIPS, OR OTHER APPROVED MEASURES.
5. STOCKPILED SOIL OR STRIPPINGS SHALL BE PLACED IN A STABLE LOCATION AND CONFIGURATION. DURING "WET WEATHER" PERIODS, STOCKPILES SHALL BE COVERED WITH PLASTIC SHEETING OR STRAW MULCH. SEDIMENT FENCE IS REQUIRED AROUND THE PERIMETER OF THE STOCKPILE.
6. EXPOSED CUT OR FILL AREAS SHALL BE STABILIZED THROUGH THE USE OF TEMPORARY SEEDING AND MULCHING, EROSION CONTROL BLANKETS OR MATS, MID-SLOPE SEDIMENT FENCES OR WATTLES, OR OTHER APPROPRIATE MEASURES. SLOPES EXCEEDING 25% MAY REQUIRE ADDITIONAL EROSION CONTROL MEASURES.
7. AREAS SUBJECT TO WIND EROSION SHALL USE APPROPRIATE DUST CONTROL MEASURES INCLUDING THE APPLICATION OF A FINE SPRAY OF WATER, PLASTIC SHEETING, STRAW MULCHING, OR OTHER APPROVED MEASURES.
8. CONSTRUCTION ENTRANCES SHALL BE INSTALLED AT THE BEGINNING OF CONSTRUCTION AND MAINTAINED FOR THE DURATION OF THE PROJECT. ADDITIONAL MEASURES INCLUDING, BUT NOT LIMITED TO, TIRE WASHES, STREET SWEEPING, AND VACUUMING MAY BE BE REQUIRED TO INSURE THAT ALL PAVED AREAS ARE KEPT CLEAN FOR THE DURATION OF THE PROJECT.
9. ACTIVE INLETS TO STORM WATER SYSTEMS SHALL BE PROTECTED THROUGH THE USE OF APPROVED INLET PROTECTION MEASURES. ALL INLET PROTECTION MEASURES ARE TO BE REGULARLY INSPECTED AND MAINTAINED AS NEEDED.
10. SATURATED MATERIALS THAT ARE HAULED OFF-SITE MUST BE TRANSPORTED IN WATER-TIGHT TRUCKS TO ELIMINATE SPILLAGE OF SEDIMENT AND SEDIMENT-LADEN WATER.
11. AN AREA SHALL BE PROVIDED FOR THE WASHING OUT OF CONCRETE TRUCKS IN A LOCATION THAT DOES NOT PROVIDE RUN-OFF THAT CAN ENTER THE STORM WATER SYSTEM. IF THE CONCRETE WASH-OUT AREA CAN NOT BE CONSTRUCTED GREATER THAN 50' FROM ANY DISCHARGE POINT, SECONDARY MEASURES SUCH AS BERMS OR TEMPORARY SETTLING PITS MAY BE REQUIRED. THE WASH-OUT SHALL BE LOCATED WITHIN SIX FEET OF TRUCK ACCESS AND BE CLEANED WHEN IT REACHES 50% OF THE CAPACITY.
12. SWEEPINGS FROM EXPOSED AGGREGATE CONCRETE SHALL NOT BE TRANSFERRED TO THE STORM WATER SYSTEM. SWEEPINGS SHALL BE PICKED UP AND DISPOSED IN THE TRASH.
13. AVOID PAVING IN WET WEATHER WHEN PAVING CHEMICALS CAN RUN-OFF INTO THE STORM WATER SYSTEM.
14. USE BMPs SUCH AS CHECK-DAMS, BERMS, AND INLET PROTECTION TO PREVENT RUN-OFF FROM REACHING DISCHARGE POINTS.
15. COVER CATCH BASINS, MANHOLES, AND OTHER DISCHARGE POINTS WHEN APPLYING SEAL COAT, TACK COAT, ETC. TO PREVENT INTRODUCING THESE MATERIALS TO THE STORM WATER SYSTEM.

30' 0 15' 30' 60'
SCALE: 1" = 30'

EROSION AND SEDIMENT CONTROL BMP IMPLEMENTATION:

1. ALL BASE ESC MEASURES (INLET PROTECTION, PERIMETER SEDIMENT CONTROL, GRAVEL CONSTRUCTION ENTRANCES, ETC.) MUST BE IN PLACE, FUNCTIONAL, AND APPROVED IN AN INITIAL INSPECTION, PRIOR TO COMMENCEMENT OF CONSTRUCTION ACTIVITIES.
2. "STOCK PILE AREA 1" SHALL BE MOVED TO "STOCK PILE AREA 2" FOLLOWING THE EXCAVATION CUT ACTIVITIES.
3. THE "STAGING, EQUIPMENT MAINTENANCE, FUELING, PORTA-POTTY, AND SOLID WASTE AREA 1" SHALL BE MOVED TO "STAGING, EQUIPMENT MAINTENANCE, FUELING, PORTA-POTTY, AND SOLID WASTE AREA 2" FOLLOWING EXCAVATION "CUT" ACTIVITIES.
4. ALL "SEDIMENT BARRIERS (TO BE INSTALLED AFTER GRADING)" SHALL BE INSTALLED IMMEDIATELY FOLLOWING ESTABLISHMENT OF FINISHED GRADE AS SHOWN ON THESE PLANS.
5. LONG TERM SLOPE STABILIZATION MEASURES "INCLUDING MATTING" SHALL BE IN PLACE OVER ALL EXPOSED SOILS BY OCTOBER 1.
6. THE STORM WATER FACILITY (TRACT "B") SHALL BE CONSTRUCTED AND LANDSCAPED PRIOR TO THE STORM WATER SYSTEM FUNCTIONING AND SITE PAVING.
7. INLET PROTECTION SHALL BE IN-PLACE IMMEDIATELY FOLLOWING PAVING ACTIVITIES.

SOLID WASTE AND HAZARDOUS MATERIALS BMPs:

REUSE AND RECYCLE CONSTRUCTION WASTES WHERE PRACTICAL.
PROPERLY STORE, APPLY, AND DISPOSE OF TOXIC OR OTHER HAZARDOUS MATERIALS.
PROVIDE WRITTEN SPILL PREVENTION PLAN AND RESPONSE PROCEDURES.
TRAIN EMPLOYEES ON SPILL PREVENTION AND PROPER DISPOSAL PROCEDURES.
PROVIDE REGULAR MAINTENANCE SCHEDULE FOR VEHICLES AND MACHINERY.
PROVIDE MATERIAL DELIVERY AND STORAGE CONTROLS, TRAINING AND SIGNAGE, MATERIAL USE, AND COVERED STORAGE AREAS FOR WASTE AND SUPPLIES.

STOCKPILE BMPs:

STABILIZE SOIL STOCKPILE AT END OF EACH DAY.
DIVERT UNCONTAMINATED FLOWS AROUND STOCKPILE.
INSTALL SEDIMENT FENCE AROUND STOCKPILE.
COVER STOCKPILE, AS NECESSARY.

THESE EROSION AND SEDIMENT CONTROL PLANS ASSUME "DRY WEATHER" CONSTRUCTION. "WET WEATHER" CONSTRUCTION MEASURES NEED TO BE APPLIED BETWEEN OCTOBER 1ST AND MAY 31ST.

23190 BLAND CIRCLE SUBDIVISION
TAX MAP 2S1E 35AB
TAX LOT 9100
CITY OF WEST LINN, OREGON

1200C PERMIT SET
GRADING & EROSION CONTROL PLAN

REVISIONS

NO.	DATE	DESCRIPTION
0	02/19	PLANNING 1ST SUBMITTAL
1	10/19	ENGINEERING 1ST SUBMITTAL
2	03/20	ENGINEERING 2ND SUBMITTAL
3	04/20	1200-C REVISION

EMERIO Design
6445 SW FALLBROOK PLACE, SUITE 100
BEAVERTON, OREGON 97008
TEL: (503) 746-8812
FAX: (503) 639-9592
www.emeriodesign.com

REGISTERED PROFESSIONAL ENGINEER 54665
DocuSigned by: Eric D. Evans 2D8A7A2B0C4A4...
6/22/2020
ERIC DANIEL EVANS
EXPIRES: 12/31/2021

SHEET EC3 OF EC5

FILE:P:\0542-001 23190 S Bland Circle\dwg\civil\Engineering Set\0542-001_grxs1, Layout: GRADING & EROSION CONTROL PLAN, Plot Date: 6/19/2020 9:05 AM, by: Josh Ayers

DocuSign Envelope ID: CFBE966A-192B-4378-9E32-B4C08CAC394B

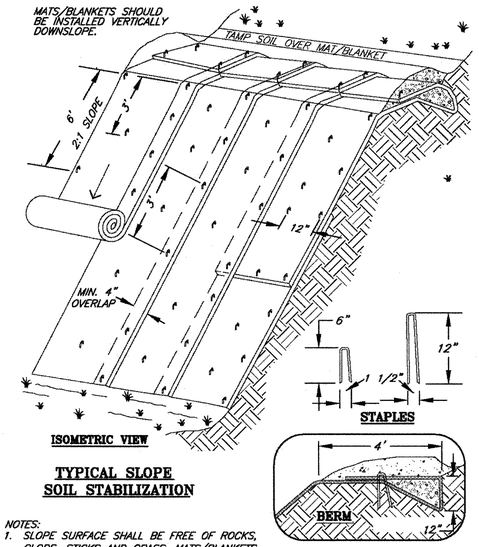

ISOMETRIC VIEW

TYPICAL SLOPE SOIL STABILIZATION

NOT TO SCALE

NOTES:
1. SLOPE SURFACE SHALL BE FREE OF ROCKS, CLODS, STICKS AND GRASS. MATS/BLANKETS SHALL HAVE GOOD SOIL CONTACT.
2. APPLY PERMANENT SEEDING BEFORE PLACING BLANKETS.
3. LAY BLANKETS LOOSELY AND STAKE OR STAPLE TO MAINTAIN DIRECT CONTACT WITH THE SOIL. DO NOT STRETCH.
4. STAKING OR STAPLING LAYOUT PER MANUFACTURERS SPECIFICATIONS.

MATTING - SLOPE INSTALLATION

DETAIL DRAWING 4–1 REVISED 01–09

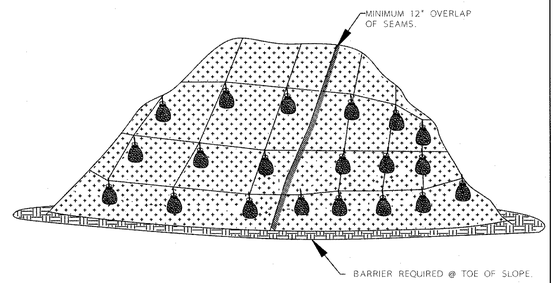

PLASTIC SHEETING

NOTES:
1. MINIMUM 12" OVERLAP OF ALL SEAMS REQUIRED.
2. BARRIER REQUIRED @ TOE OF STOCK PILE.
3. COVERING MAINTAINED TIGHTLY IN PLACE BY USING SANDBAGS OR TIRES ON ROPES WITH MAXIMUM 10' GRID SPACING IN ALL DIRECTIONS.

PLASTIC SHEETING

DETAIL DRAWING 4 - 3 REVISED 01 - 09

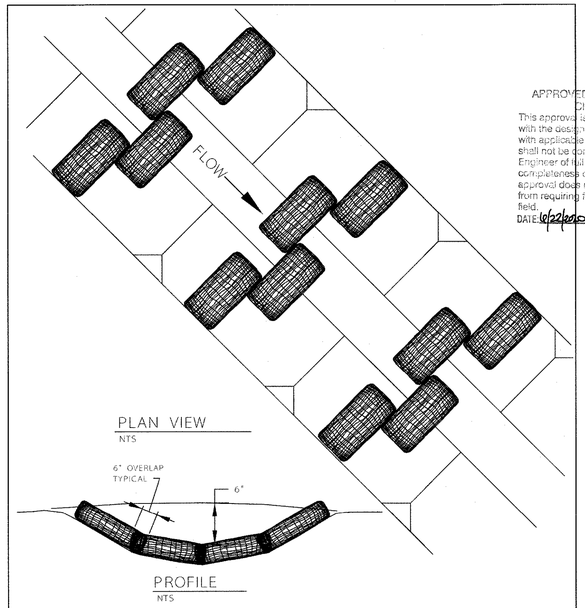

APPROVED FOR CONSTRUCTION BY
CITY OF WEST LINN
This approval is only for general conformance with the design concept and general compliance with applicable codes and requirements and shall not be construed as relieving the Design Engineer of full responsibility for accuracy and completeness of the drawings. This plan review approval does not prevent the City from requiring further code corrections in the field.
DATE 10/22/2020 BY:

NOTES:
1. STAKING OF BAGS REQUIRED USING (2) 1"X2" WOOD STAKES OR APPROVED EQUAL PER BAG.
2. SURFACE MUST BE SMOOTH BEFORE APPLICATION.
3. CHECK DAMS CAN BE CONSTRUCTED USING STRAW WATTLES OR OTHER MATERIALS AS APPROVED BY THE DISTRICT OR CITY.

CHECK DAM - BIO-FILTER BAGS

DETAIL DRAWING 4 - 5 REVISED 01 - 09

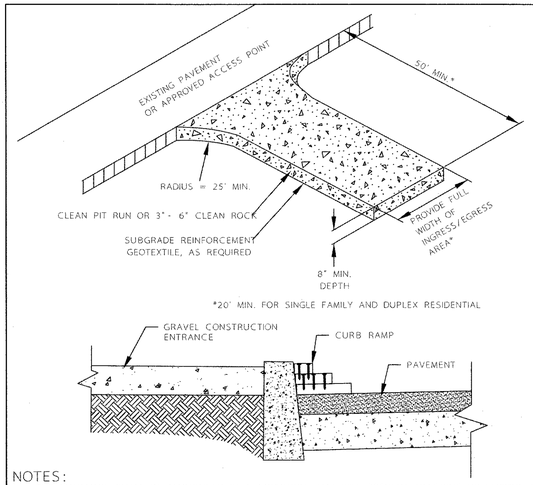

NOTES:
1. THE ENTRANCE SHALL BE MAINTAINED IN A CONDITION THAT WILL PREVENT TRACKING OR FLOWING OF SEDIMENT ONTO PUBLIC RIGHT-OF-WAYS. THIS MAY REQUIRE TOP DRESSING, REPAIR AND/OR CLEAN OUT OF ANY MEASURES USED TO TRAP SEDIMENT.
2. WHEN NECESSARY, WHEELS SHALL BE CLEANED PRIOR TO ENTRANCE ONTO PUBLIC RIGHT-OF-WAY.
3. WHEN WASHING IS REQUIRED, IT SHALL BE DONE ON AN AREA STABILIZED WITH CRUSHED STONE THAT DRAINS INTO AN APPROVED SEDIMENT TRAP OR SEDIMENT BASIN.
4. WHERE RUNOFF CONTAINING SEDIMENT LADEN WATER IS LEAVING THE SITE VIA THE CONSTRUCTION ENTRANCE, OTHER MEASURES SHALL BE IMPLEMENTED TO DIVERT RUNOFF THROUGH AN APPROVED FILTERING SYSTEM.
5. DIMENSIONS
   SINGLE FAMILY
   20' LONG BY 20' WIDE 8" DEEP OF ¾" MINUS CLEAN ROCK.
   COMMERCIAL:
   50' LONG BY 20' WIDE 3-6" CLEAN ROCK, GOVERNING AUTHORITY MAY REQUIRE GEOTEXTILE FABRIC TO PREVENT SUB-SOIL PUMPING.

CONSTRUCTION ENTRANCE

DETAIL DRAWING 4 - 13 REVISED 01 - 09

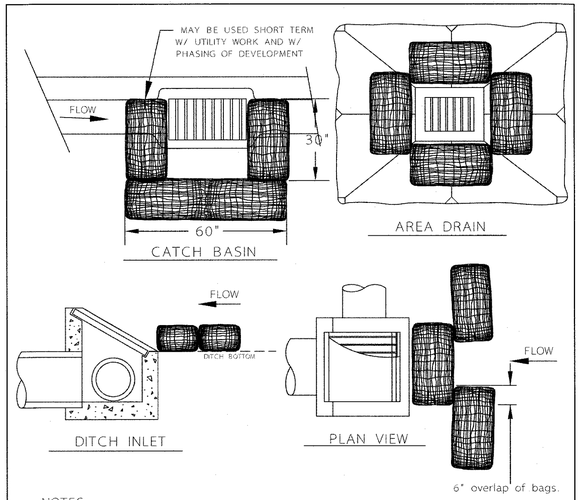

NOTES:
1. ADDITIONAL MEASURES MUST BE CONSIDERED DEPENDING ON SOIL TYPES.
2. BIO-FILTER BAGS SHOULD BE STAKED WHERE APPLICABLE USING (2) 1"x2"WOODEN STAKES OR APPROVED EQUAL PER BAG.
3. WHEN USING 30" BIO-BAGS TO PROTECT A CATCH BASIN YOU MUST HAVE 4 BAGS AND THEY SHALL BE OVERLAPPED BY 6".

INLET PROTECTION TYPE 4

DETAIL DRAWING 4 - 18 REVISED 01 - 09

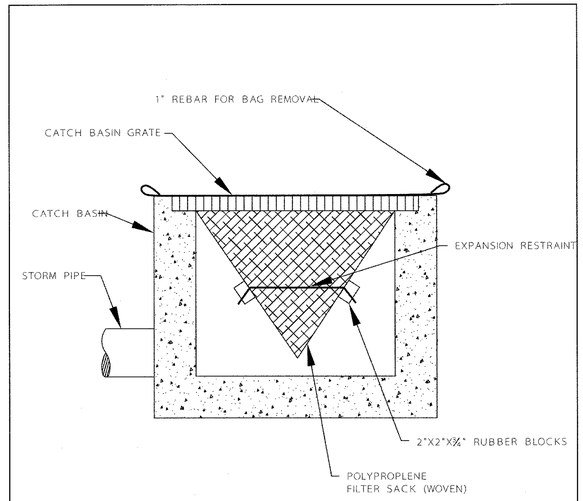

WOVEN POLYPROPLENE SACK

NOTE:
1. RECESSED CURB INLET CATCH BASINS MUST BE BLOCKED WHEN USING FILTER FABRIC INLET SACKS. SIZE OF FILTER FABRIC INLET SACKS TO BE DETERMINED BY MANUFACTURER.

INLET PROTECTION TYPE 5

DETAIL DRAWING 4 - 19 REVISED 01 - 09

23190 BLAND CIRCLE SUBDIVISION
TAX MAP 2S1E 35AB
TAX LOT 9100
CITY OF WEST LINN, OREGON

1200C PERMIT SET

EROSION AND SEDIMENT CONTROL DETAILS

REVISIONS

NO.	DATE	DESCRIPTION
0	02/19	PLANNING 1ST SUBMITTAL
1	10/19	ENGINEERING 1ST SUBMITTAL
2	03/20	ENGINEERING 2ND SUBMITTAL
3	04/20	1200-C REVISION

EMERIO Design
6445 SW FALLBROOK PLACE, SUITE 100
BEAVERTON, OREGON 97008
TEL: (503) 626-0672
FAX: (503) 639-9592
www.emeriodesign.com

REGISTERED PROFESSIONAL ENGINEER 54665 OREGON
Eric D. Evans
DocuSigned by:
10/22/2020
ERIC DANIEL EVANS
EXPIRES: 12/31/2021

SHEET EC4 OF EC5

FILE:P:\0542-001 23190 S Bland Circle\dwg\civil\Engineering Set\0542-001_ers4, Layout: EROSION AND SEDIMENT CONTROL DETAILS, Plot Date: 5/22/2020 3:39 PM, by: Josh Ayers

DocuSign Envelope ID: CFBE966A-192B-4378-9E32-B4C08CAC394B

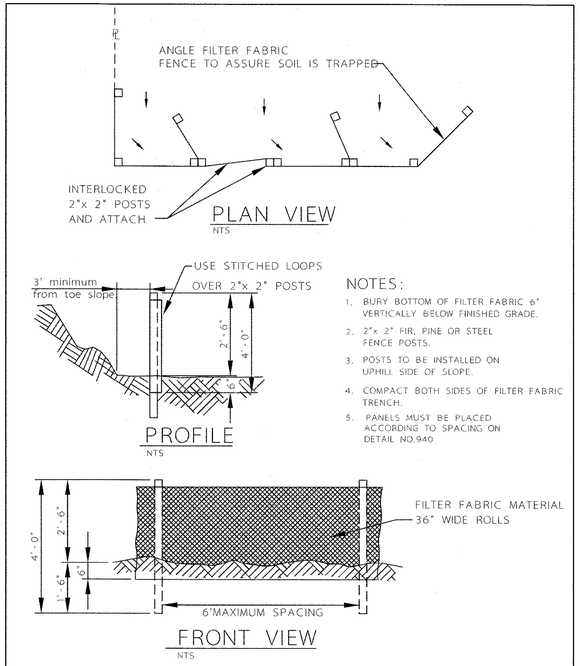

NOTES:

1. BURY BOTTOM OF FILTER FABRIC 6" VERTICALLY BELOW FINISHED GRADE.
2. 2"x 2" FIR, PINE OR STEEL FENCE POSTS.
3. POSTS TO BE INSTALLED ON UPHILL SIDE OF SLOPE.
4. COMPACT BOTH SIDES OF FILTER FABRIC TRENCH.
5. PANELS MUST BE PLACED ACCORDING TO SPACING ON DETAIL NO.940

SEDIMENT FENCE

DETAIL DRAWING 4-23 REVISED 01-09

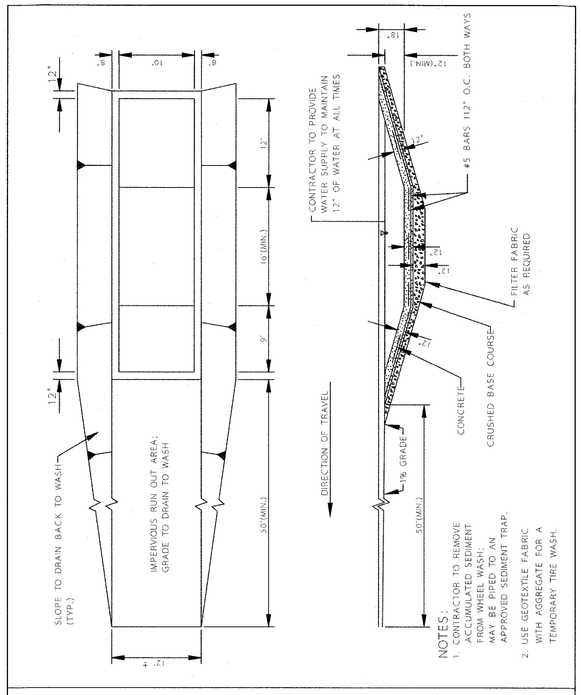

NOTES:

1. CONTRACTOR TO REMOVE ACCUMULATED SEDIMENT FROM WHEEL WASH; MAY BE REQUIRED TO AN APPROVED SEDIMENT TRAP.
2. USE GEOTEXTILE FABRIC WITH AGGREGATE FOR A TEMPORARY TIRE WASH.

TIRE WASH

DETAIL DRAWING 4-26 REVISED 01-09

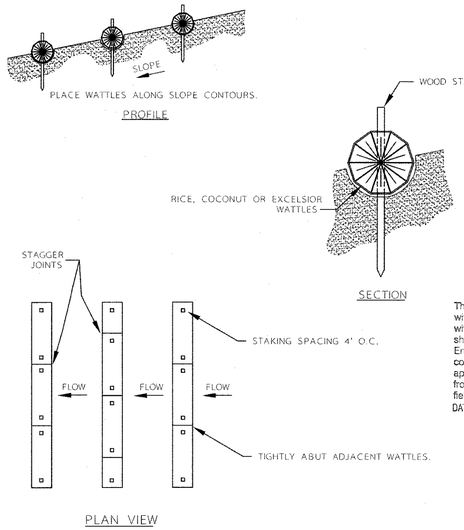

NOTES:

1. STAKING SPECIFICATIONS:
   a. 1"X2" WOODEN STAKES
   b. ADDITIONAL STAKES MAY BE INSTALLED ON DOWNHILL SIDE OF WATTLES, ON STEEP SLOPE OR HIGHLY EROSIVE SOILS.
2. SPACING IN ACCORDANCE WITH DETAIL 940.

APPROVED FOR CONSTRUCTION BY
CITY OF WEST LINN
This approval is only for general conformance with the design concept and general compliance with applicable codes and requirements and shall not be construed as relieving the Design Engineer of full responsibility for accuracy and completeness of the drawings. This plan review approval does not prevent the City from requiring further code corrections in the field.
DATE: 6/22/2020 BY:

WATTLES

DETAIL DRAWING 4-27 REVISED 01-09

NOTES:

1. WASHOUT FACILITIES SHALL BE MAINTAINED TO PROVIDE ADEQUATE HOLDING CAPACITY WITH A MINIMUM FREEBOARD OF 12 INCHES.
2. WASHOUT FACILITIES MUST BE CLEANED, OR NEW FACILITIES MUST BE CONSTRUCTED AND READY FOR USE ONCE THE WASHOUT IS 75% FULL.
3. IF THE WASHOUT IS NEARING CAPACITY, VACUUM AND DISPOSE OF THE WASTE MATERIAL IN AN APPROVED MANNER.
4. TEMPORARY CONCRETE WASHOUT FACILITIES SHALL BE LOCATED A MINIMUM OF 50 FT FROM SENSITIVE AREAS INCLUDING OPEN DRAINAGE FACILITIES AND WATERSOURSES.
5. CONCRETE WASHOUT FACILITIES SHALL BE CONSTRUCTED AND MAINTAINED IN SUFFICIENT QUANTITY AND SIZE TO CONTAIN ALL LIQUID AND CONCRETE WASTE GENERATED BY WASHOUT OPERATIONS.
6. INSTALL CONCRETE WASHOUT SIGN WITHIN 30 FEET OF TEMPORARY CONCRETE WASHOUT FACILITY.
7. TEMPORARY CONCRETE WASHOUTS MAY BE A PREFABRICATED CONTAINER THAT IS PORTABLE AND REUSABLE.

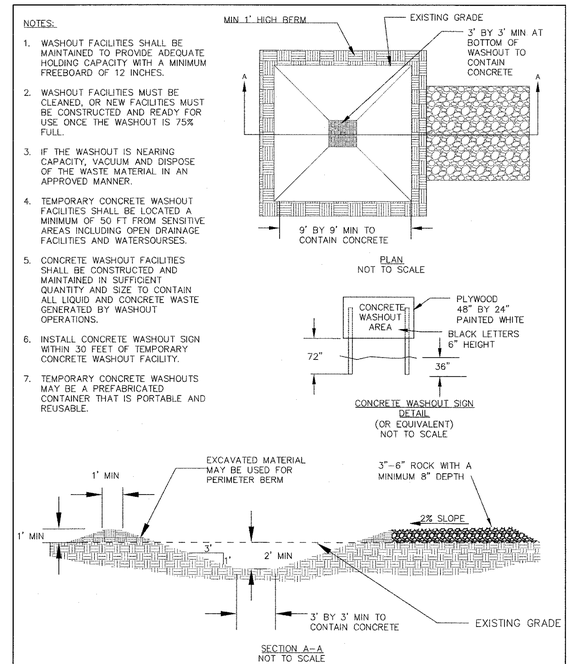

CONCRETE WASHOUT

DRAWING NO. 900 REVISED 12-16

CleanWater Services

23190 BLAND CIRCLE SUBDIVISION
TAX MAP 2S1E 35AB
TAX LOT 9100
CITY OF WEST LINN, OREGON

1200C PERMIT SET

EROSION AND SEDIMENT CONTROL DETAILS

REVISIONS

NO.	DATE	DESCRIPTION
0	02/19	PLANNING 1ST SUBMITTAL
1	10/19	ENGINEERING 1ST SUBMITTAL
2	03/20	ENGINEERING 2ND SUBMITTAL
3	04/20	1200-C REVISION

EMERIO Design
6445 SW FALLBROOK PLACE, SUITE 100
BEAVERTON, OREGON 97008
TEL: (503) 746-8812
FAX: (503) 639-9592
www.emeriodesign.com

REGISTERED PROFESSIONAL ENGINEER 54665 DocuSigned by: Eric D. Evans 3D647A0B8CA245B... JULY 11, 2020 ERIC DANIEL EVANS
EXPIRES: 12/31/2021

SHEET **EC5** OF **EC5**

FILE: P:\0542-001 23190 S Bland Circle\dwg\civ\Engineering Set\0542-001_ers5, Layout: EROSION AND SEDIMENT CONTROL DETAILS, Plot Date: 5/22/2020 3:39 PM, by: Josh Ayers