KNOLLCREST SUBDIVISION

CONSTRUCTION PLANS

CITY OF WEST LINN CASE FILE: SUB-17-03

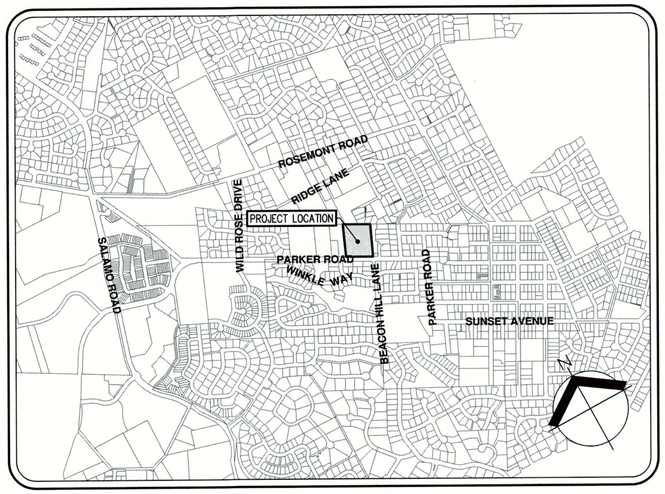

VICINITY MAP

SCALE: 1" = 1000'

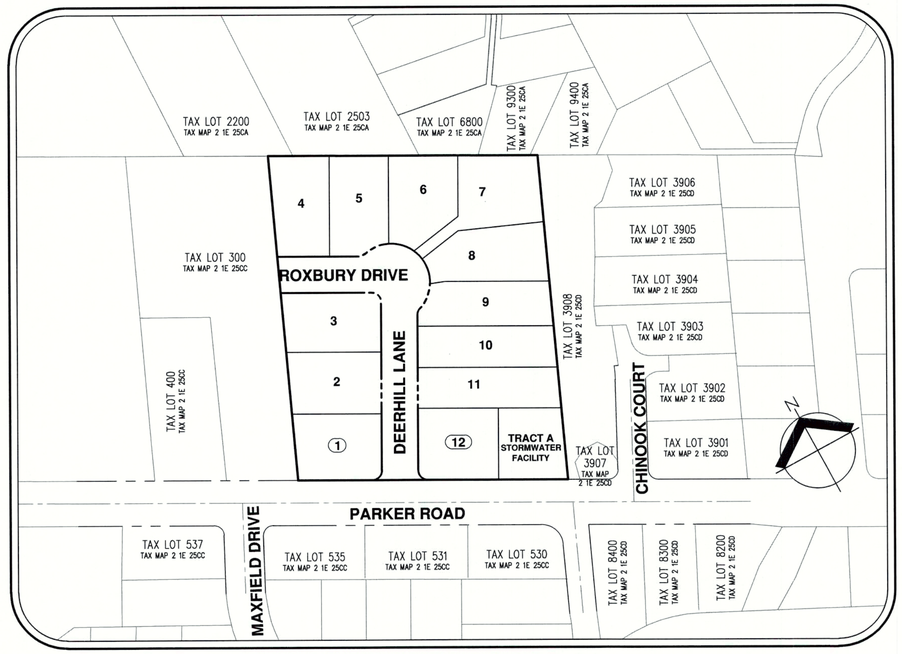

SITE MAP

SCALE: 1" = 100'

OWNER/APPLICANT:

NOELL AND CAROL PRICE
3015 PARKER ROAD
WEST LINN, OR 97068

PLANNING/CIVIL ENGINEERING/SURVEYING LANDSCAPE ARCHITECTURE FIRM (APPLICANT'S CONSULTANT):

AKS ENGINEERING & FORESTRY, LLC
CONTACT: MONTY HURLEY
12965 SW HERMAN ROAD, SUITE 100
TUALATIN, OR 97062
PH: 503-563-6151
FAX: 503-563-6152

PROJECT LOCATION:

3001 AND 3015 PARKER ROAD, WEST LINN, OREGON 97068

EXISTING LAND USE:

SINGLE-FAMILY HOME.

PROJECT PURPOSE:

TWELVE-LOT RESIDENTIAL SUBDIVISION FOR FUTURE SINGLE-FAMILY DETATCHED HOMES IN THE R-10 ZONE.

PROPERTY DESCRIPTION:

TAX LOT 100 AND 200, CLACKAMAS COUNTY ASSESSOR'S MAP 2 1E 25CC, LOCATED IN THE SOUTHWEST 1/4 OF THE SOUTHWEST 1/4 OF SECTION 25, TOWNSHIP 2 SOUTH, RANGE 1 EAST, WILLAMETTE MERIDIAN, CITY OF WEST LINN, CLACKAMAS COUNTY, OREGON.

VERTICAL DATUM:

VERTICAL DATUM: ELEVATIONS ARE DERIVED BY TRIMBLE VRS NOW NETWORK, AND CHECKED AGAINST NGS BENCHMARK NO. QE1501, LOCATED ALONG HWY 99E AND THE JUNCTION OF INTERSTATE HWY 205 ELEVATION = 81.25 FEET (NAVD 88).

ATTENTION EXCAVATORS:

OREGON LAW REQUIRES YOU TO FOLLOW RULES ADOPTED BY THE OREGON UTILITY NOTIFICATION CENTER. THOSE RULES ARE SET FORTH IN OAR 952-001-0010 THROUGH OAR 952-001-0090. YOU MAY OBTAIN COPIES OF THESE RULES FROM THE CENTER BY CALLING 503-232-1987. IF YOU HAVE ANY QUESTIONS ABOUT THE RULES, YOU MAY CONTACT THE CENTER. YOU MUST NOTIFY THE CENTER AT LEAST TWO BUSINESS DAYS, BEFORE COMMENCING AN EXCAVATION. CALL 503-246-6699.

OREGON UTILITY NOTIFICATION CENTER
Know what's below. Call before you dig.
811
DIG SAFELY OREGON 1-800-332-2344

PROJECT RECORD DRAWING

CONTRACTOR SHALL PROVIDE THE PROJECT ENGINEER WITH A REDLINED COPY OF THESE CONSTRUCTION PLANS SHOWING AS-BUILT ELEVATIONS, LOCATIONS, AND PLAN DEVIATIONS. REDLINED AS-BUILT DRAWINGS SHALL BE SUBMITTED TO THE PROJECT ENGINEER ONE WEEK PRIOR TO REQUESTING WALK-THROUGH AND/OR ACCEPTANCE OF SUBSTANTIAL COMPLETION.

I, THE UNDERSIGNED, STATE I HAVE CHECKED AND VERIFIED THAT THESE REDLINED AS-BUILT DRAWINGS ARE ACCURATE AND COMPLETE TO THE BEST OF MY KNOWLEDGE.

SIGNATURE _____ DATE _____

THIS PLAN REVIEW APPROVAL DOES NOT PREVENT THE FIELD INSPECTOR FROM REQUIRING FURTHER CODE CORRECTIONS.

CITY OF West Linn ENGINEERING APPROVED
DATE 1/10/19 BY EL

UTILITY CONTACTS

POWER

PORTLAND GENERAL ELECTRIC
ATTN: STACY FERGUSON (PRIMARY POWER)
PH: 503-669-5276
ATTN: LISA GUARNERO (STREET LIGHTS)
PH: 503-742-8299
209 WARNER MILNE ROAD
OREGON CITY, OR 97045

CABLE/INTERNET

COMCAST
ATTN: VAN MESPLAY
11308 SW 68TH PKWY
TIGARD, OREGON. 97223
PH: (971) 801-5787
VAN_MESPLAY@COMCAST.COM

TELEPHONE

CENTURY LINK
1001 MOLALLA AVE
OREGON CITY, OREGON. 97045
PH: (888) 496-1650

GAS

NW NATURAL
ATTN: BRIAN KELLEY
220 NW 2ND AVENUE
PORTLAND, OR 97209
PH: 503-220-2427
NCPROJ@NWNATURAL.COM

GEOTECHNICAL ENGINEER

GEOPACIFIC ENGINEERING INC.
CONTACT: JIM IMBRIE
14835 SW 72ND AVENUE
PORTLAND, OREGON. 97224
PH: (503) 625-4455

FIRE

TUALATIN VALLEY FIRE AND RESCUE
11945 SW 70TH AVENUE
TIGARD, OREGON. 97223
PH: (503) 649-8577

GARBAGE

WEST LINN REFUSE AND RECYCLING
1600 SE 4TH AVE
CANBY, OREGON. 97013
PH: (503) 557-3900

WATER / SANITARY SEWER / STORM SEWER/STREETS

CITY OF WEST LINN PUBLIC WORKS
4100 NORFOLK STREET
WEST LINN, OREGON. 97068
PH: (503) 722-3433

SEE SHEET C001 FOR SHEET INDEX

AKS ENGINEERING & FORESTRY, LLC
12965 SW HERMAN RD STE 100
TUALATIN, OR 97062
P: 503.563.6151
F: 503.563.6152
aks-eng.com
AKS
ENGINEERING · SURVEYING · NATURAL RESOURCES
FORESTRY · PLANNING · LANDSCAPE ARCHITECTURE

KNOLLCREST SUBDIVISION
WEST LINN
TAX LOTS 100 & 200
OREGON
CLACKAMAS COUNTY TAX MAP 2 1E 25CC

COVER SHEET WITH VICINITY AND SITE MAP

DESIGNED BY:	CLR
DRAWN BY:	NSL/AMF
CHECKED BY:	RSW
SCALE:	AS NOTED
DATE: 07/30/2018	

REGISTERED PROFESSIONAL ENGINEER
SBS
OREGON
MAY 9, 2003
MONTGOMERY B. HURLEY
RENEWAL DATE: 6/30/19

REVISIONS
1 12-04-2018 EL

JOB NUMBER
5132

SHEET
C000

AKS DRAWING FILE: 5132 C000 COVER.DWG | LAYOUT: C000

GENERAL NOTES, EXISTING CONDITIONS, AND DIMENSIONED SUBDIVISION PLAN

C000 COVER SHEET WITH VICINITY AND SITE MAP
C001 SHEET INDEX
C002 GENERAL CONSTRUCTION NOTES & LEGEND
C003 EXISTING CONDITIONS
C004 DIMENSIONED FIRE AND LIFE SAFETY PLAN
C010 DIMENSIONED SUBDIVISION AND SURVEY MONUMENTATION PLAN
C020 COMPOSITE UTILITY PLAN

TREE PRESERVATION AND REMOVAL PLANS

C030 TREE PRESERVATION AND REMOVAL COVER SHEET
C031 TREE PRESERVATION AND REMOVAL PLAN
C032 TREE PRESERVATION AND REMOVAL TABLE
C033 TREE PRESERVATION AND REMOVAL TABLE
C034 TREE PRESERVATION AND REMOVAL TABLE

DEMOLITION, GRADING, AND EROSION & SEDIMENT CONTROL PLANS

C050 GRADING, EROSION AND SEDIMENT CONTROL COVER SHEET
C051 GRADING, EROSION AND SEDIMENT CONTROL NOTES
C052 DEMOLITION PLAN
C053 GRADING PLAN
C054A INITIAL EROSION AND SEDIMENT CONTROL PLAN
C054B GRADING, EROSION AND SEDIMENT CONTROL PLAN
C055 GRADING, EROSION AND SEDIMENT CONTROL DETAILS
C056 GRADING, EROSION AND SEDIMENT CONTROL DETAILS

STREET CONSTRUCTION PLANS

C100 STREET CONSTRUCTION PLANS COVER SHEET
C101 STREET CROSS SECTIONS
C102 STREET OVERVIEW
C103 PARKER ROAD PLAN AND PROFILE
C104 DEERHILL LANE – ROXBURY DRIVE PLAN AND PROFILE
C105 CURB RETURN INFORMATION (1 & 2)
C106 CURB RETURN INFORMATION (3, 4, & 5)
C107 STREET CONSTRUCTION DETAILS
C108 STREET CONSTRUCTION DETAILS
C109 SIGNING AND STRIPING PLAN
C110 SIGNING AND STRIPING DETAILS
C111 STREET LIGHTING PLAN

STORM DRAINAGE CONSTRUCTION PLANS

C200 STORM DRAINAGE PLANS COVER SHEET
C201 STORM DRAINAGE PLAN AND PROFILE (STM 1)
C202 STORM DRAINAGE PLAN AND PROFILE (STM 2 & 3)
C203 STORMWATER FACILITY PLAN AND CROSS SECTIONS
C204 STORM DRAINAGE DETAILS
C205 STORM DRAINAGE DETAILS

SANITARY SEWER CONSTRUCTION PLANS

C300 SANITARY SEWER PLANS COVER SHEET
C301 SANITARY SEWER PLAN AND PROFILE (SAN 9E–4.1)
C302 SANITARY SEWER PLAN AND PROFILE (SAN 9E–4.1.3)
C303 SANITARY SEWER DETAILS

WATER CONSTRUCTION PLANS

C400 WATER PLANS COVER SHEET
C401 WATER PLAN AND PROFILES
C402 WATER DETAILS

LANDSCAPING PLANS

L100 LANDSCAPE PLAN COVER SHEET
L101 STREET TREE PLAN
L102 STORMWATER FACILITY PLANTING PLAN
L103 WATER RESOURCE ENHANCEMENT PLAN
L104 LANDSCAPE DETAILS

AKS ENGINEERING & FORESTRY, LLC
12965 SW HERMAN RD STE 100
TUALATIN, OR 97062
P: 503.563.6151
F: 503.563.6152
aks-eng.com

AKS

ENGINEERING · SURVEYING · NATURAL RESOURCES
FORESTRY · PLANNING · LANDSCAPE ARCHITECTURE

KNOLLCREST SUBDIVISION

WEST LINN **OREGON**

TAX LOTS 100 & 200 CLACKAMAS COUNTY TAX MAP 2 1E 25CC

SHEET INDEX

DESIGNED BY:	CLR
DRAWN BY:	NSL/AMF
CHECKED BY:	RSW
SCALE:	AS NOTED
DATE: 07/30/2018	

REGISTERED PROFESSIONAL ENGINEER 58546PE OREGON JULY 9, 2013 MONTGOMERY B. HURLEY

RENEWAL DATE: 6/30/19

REVISIONS

JOB NUMBER
5132

SHEET
C001

AKS DRAWING FILE: 5132 C000 COVER.DWG | LAYOUT: C001

GENERAL NOTES

1. AKS ENGINEERING & FORESTRY, LLC SHALL BE RETAINED TO PROVIDE CONSTRUCTION / CONSULTATION SERVICES (TO INCLUDE INSPECTION/OBSERVATION AND CONSTRUCTION SURVEYING) DURING CONSTRUCTION OF ALL IMPROVEMENTS. SUFFICIENT INSPECTION/OBSERVATION AND CONSULTATION SERVICES BY THE PROJECT ENGINEER IS NECESSARY TO ENSURE THAT CONSTRUCTION IS CONSISTENT WITH THE INTENT OF THE PLANS AND TO ADDRESS ANY CHANGES THAT ARE DETERMINED NECESSARY DURING CONSTRUCTION. AKS DOES NOT ACCEPT ANY RESPONSIBILITY OR LIABILITY FOR ITEMS CONSTRUCTED BASED ON MISINTERPRETATIONS OF ITEMS SHOWN ON THESE PLANS.

2. ALL WORK AND MATERIAL SHALL CONFORM TO THESE PLANS AND THE APPLICABLE PROVISIONS OF THE CITY OF WEST LINN. THE FOLLOWING STANDARD SPECIFICATIONS ARE INCORPORATED BY REFERENCE. ALL MATERIALS SHALL CONFORM TO APPLICABLE REQUIREMENTS OF THE UNIFORM PLUMBING CODE (UPC) AND ANY OREGON SUPPLEMENTS, INTERNATIONAL UNIFORM BUILDING CODE (UBC) AND CITY OF WEST LINN PUBLIC WORKS STANDARDS AND ODOT STANDARD SPECIFICATIONS FOR CONSTRUCTION.

3. IT IS THE RESPONSIBILITY OF THE CONTRACTOR TO REVIEW ALL OF THE DOCUMENTS ASSOCIATED WITH THE PROJECT WORK SCOPE PRIOR TO THE INITIATION OF CONSTRUCTION. SHOULD THE CONTRACTOR FIND A CONFLICT WITH THE DOCUMENTS RELATIVE TO THE SPECIFICATIONS OR THE RELATIVE CODES, IT IS THE CONTRACTOR'S RESPONSIBILITY TO NOTIFY THE PROJECT ENGINEER IN WRITING PRIOR TO THE START OF CONSTRUCTION. FAILURE BY THE CONTRACTOR TO NOTIFY THE PROJECT ENGINEER SHALL CONSTITUTE ACCEPTANCE OF FULL RESPONSIBILITY BY THE CONTRACTOR TO COMPLETE THE SCOPE OF WORK AS DEFINED BY THE DOCUMENTS AND IN FULL COMPLIANCE WITH LOCAL, STATE, AND FEDERAL REGULATIONS AND CODES.

4. THE CONTRACTOR MUST BE LICENSED BY THE STATE OF OREGON.

5. THE CONTRACTOR SHALL OBTAIN ALL REQUIRED PERMITS AND LICENSES BEFORE STARTING CONSTRUCTION.

6. OREGON LAW REQUIRES THAT THE RULES ADOPTED BY OREGON UTILITY NOTIFICATION CENTER BE FOLLOWED. THOSE RULES ARE SET FORTH IN OAR 952-001-0090. YOU MAY OBTAIN COPIES OF THE RULES BY CALLING THE CENTER OR ACCESSING VIA INTERNET AT WWW.STATE.OR.US/GOVERNME.HTM CALL BEFORE YOU DIG – PORTLAND METRO AREA 503-246-6699.

7. THE CONTRACTOR SHALL NOTIFY THE PROJECT ENGINEER AND THE CITY OF WEST LINN SEVEN (7) DAYS IN ADVANCE OF THE BEGINNING OF CONSTRUCTION.

8. BEFORE INITIATING ANY CONSTRUCTION ACTIVITY, THERE SHALL BE A PRE-CONSTRUCTION CONFERENCE BETWEEN PRINCIPLE REPRESENTATIVES OF THE ENGINEER, CONTRACTOR, DEVELOPER, AND THE CITY OF WEST LINN.

9. THE LOCATIONS, DEPTHS, AND DESCRIPTIONS OF EXISTING UTILITIES SHOWN ARE COMPILED FROM AVAILABLE RECORDS AND/OR FIELD SURVEYS. THE PROJECT ENGINEER OR UTILITY COMPANIES DO NOT GUARANTEE THE ACCURACY OR THE COMPLETENESS OF SUCH RECORDS. ADDITIONAL UTILITIES MAY EXIST WITHIN THE WORK AREA.

10. THE LOCATION OF EXISTING UTILITIES SHOWN ON THE PLANS ARE APPROXIMATE AND SHOWN FOR INFORMATION PURPOSES ONLY. THE CONTRACTOR SHALL HAVE ALL UTILITIES LOCATED PRIOR TO COMMENCING CONSTRUCTION. NOTIFY PROJECT ENGINEER OF ANY DISCREPANCIES PRIOR TO CONSTRUCTION. ADDITIONAL UNDERGROUND UTILITIES MAY EXIST.

11. THE CONTRACTOR IS RESPONSIBLE FOR COORDINATING WITH UTILITY COMPANIES FOR RELOCATION OF POWER POLES, VAULTS, ETC.

12. NOTIFY THE UTILITY PROVIDER IMMEDIATELY OF ALL UTILITIES EXPOSED. UNIDENTIFIED UTILITIES SHALL NOT BE DISRUPTED OR CUT UNTIL THE UTILITY PROVIDER HAS APPROVED THE CUT OR DISRUPTION. UTILITIES OR INTERFERING PORTIONS OF UTILITIES THAT ARE ABANDONED IN PLACE SHALL BE REMOVED BY THE CONTRACTOR TO THE EXTENT NECESSARY TO ACCOMPLISH THE WORK.

13. THE CONTRACTOR IS TO COORDINATE CONSTRUCTION OF ALL DRY UTILITIES (POWER, TELEPHONE, CABLE, AND COMMUNICATIONS).

14. POWER, TELEPHONE, CABLE AND COMMUNICATIONS TRENCHING AND CONDUITS ARE TO BE INSTALLED PER UTILITY COMPANY REQUIREMENTS WITH PULL WIRE. CONTRACTOR SHALL VERIFY WITH UTILITY COMPANY FOR SIZE, LOCATION AND TYPE OF CONDUIT PRIOR TO CONSTRUCTION, AND SHALL ENSURE THAT TRENCHES ARE ADEQUATELY PREPARED FOR INSTALLATION PER UTILITY COMPANY REQUIREMENTS. ALL CHANGES IN DIRECTION OF UTILITY CONDUIT RUNS SHALL HAVE LONG RADIUS STEEL BENDS.

15. UNLESS OTHERWISE SHOWN ON THE DRAWINGS AND APPROVED IN WRITING BY ALL JURISDICTIONS HAVING AUTHORITY, NEW AND RELOCATED PRIVATE UTILITIES (POWER, CABLE TV & TELEPHONE) SHALL BE INSTALLED UNDERGROUND IN CONJUNCTION WITH THE DEVELOPMENT.

16. CONTRACTOR SHALL COORDINATE WITH GAS, POWER, TELEPHONE, AND CABLE TV COMPANY FOR LOCATION OF CONDUITS IN COMMON TRENCHES, AS WELL AS LOCATION OF VAULTS, PEDESTALS, ETC. UNLESS OTHERWISE APPROVED IN WRITING BY THE COUNTY, ALL ABOVE-GRADE FACILITIES SHALL BE LOCATED IN THE P.U.E.(WHERE A P.U.E. EXISTS OR WILL BE GRANTED BY THE DEVELOPMENT), AND OTHERWISE SHALL BE PLACED IN A LOCATION OUTSIDE THE PROPOSED SIDEWALK LOCATION.

17. CONTRACTOR MUST VERIFY ALL EXISTING UTILITIES FOR BOTH VERTICAL ELEVATION AND HORIZONTAL LOCATION PRIOR TO COMMENCING CONSTRUCTION (POTHOLE BEFORE DIGGING IF NECESSARY). SHOULD CONFLICTS ARISE AND REDESIGN OR RELOCATION OF FACILITIES BE NECESSARY, THEY SHALL BE DONE AT THE CONTRACTOR'S EXPENSE. CHANGES MUST BE APPROVED BY THE PROJECT ENGINEER AND THE CITY OF WEST LINN IN ADVANCE OF WORK. CONTRACTOR SHALL COORDINATE THE WORK WITH ALL APPLICABLE UTILITY AGENCIES.

18. THE CONTRACTOR SHALL HAVE APPROPRIATE EQUIPMENT ON SITE TO PRODUCE A FIRM, SMOOTH, UNDISTURBED SUBGRADE AT THE TRENCH BOTTOM, TRUE TO GRADE. THE BOTTOM OF THE TRENCH EXCAVATION SHALL BE SMOOTH AND FREE OF LOOSE MATERIALS OR TOOTH GROOVES FOR THE ENTIRE WIDTH OF THE TRENCH PRIOR TO PLACING THE GRANULAR BEDDING MATERIAL.

19. TRENCHES WITHIN RIGHTS-OF-WAY, PAVEMENT, OR CONCRETE AREAS SHALL BE BACKFILLED WITH APPROVED CRUSHED ROCK (PER CITY OF WEST LINN STANDARDS APPLICABLE BACKFILL AND COMPACTION REQUIREMENTS), AS SPECIFIED ON THESE PLANS. TRENCHES OUTSIDE OF THE RIGHTS-OF-WAY, PAVEMENT, OR CONCRETE AREAS MAY BE BACKFILLED WITH NATIVE MATERIAL (PER APPLICABLE BACKFILL AND COMPACTION REQUIREMENTS). IF QUESTIONS ARISE, CONTRACTOR SHALL CHECK WITH PROJECT ENGINEER AND VERIFY.

20. ALL TRENCHES SHALL BE PROPERLY SHORED AND BRACED TO PREVENT CAVING.

21. AT LEAST ONE COMPACTION TEST SHALL BE PERFORMED FOR EVERY 200 LINEAL FEET OF UTILITY TRENCH BACKFILLED, AND EVERY THREE FEET OF DEPTH, OR PER PROJECT GEOTECHNICAL ENGINEER'S RECOMMENDATIONS.

22. NO TRENCHES WILL BE ALLOWED TO REMAIN OPEN OVERNIGHT. A TEMPORARY HARD-SURFACE PATCH (HOT MIX BASE PAVING) OR STEEL PLATES SECURED WITH PINS OR COLD MIX RAMPS SHALL BE PLACED ON TRENCHES WITHIN EXISTING ROADWAYS AT THE END OF EACH DAY'S WORK. NO TRENCH, ON-SITE OR OFF-SITE, SHALL BE LEFT AT ANY TIME IN AN UNSAFE CONDITION. THE CONTRACTOR IS RESPONSIBLE AND LIABLE FOR HAZARDS OR DAMAGE RESULTING FROM THE PROSECUTION OF THE WORK.

23. SUBSEQUENT SETTLEMENT OR CRACKING OF FINISHED SURFACES WITHIN THE WARRANTY PERIOD SHALL BE CONSIDERED TO BE A FAILURE OF THE FINISHED SURFACE OR SUBGRADE, AND REPAIRED IN A MANNER ACCEPTABLE TO THE THE CITY OF WEST LINN.

24. THE CONTRACTOR SHALL CONTROL TRAFFIC THROUGH THE PROJECT SITE IN CONFORMANCE WITH THE LATEST EDITION OF "ODOT TEMPORARY TRAFFIC CONTROL MANUAL," AND THE CITY OF WEST LINNAL REQUIREMENTS. THE CONTRACTOR SHALL AT ALL TIMES MAINTAIN LOCAL ACCESS AROUND THE PROJECT SITE. THE CONTRACTOR SHALL HAVE A PROJECT SPECIFIC TRAFFIC CONTROL PLAN, APPROVED BY THE THE CITY OF WEST LINN, AND AVAILABLE ON THE PROJECT SITE.

25. TRAFFIC CONTROL DEVICES, FLAG PERSONS, ETC., SHALL BE IN PLACE PRIOR TO INITIATION OF CONSTRUCTION WORK AND SHALL BE EFFECTIVELY MAINTAINED. A TRAFFIC CONTROL PLAN SHALL BE SUBMITTED TO THE THE CITY OF WEST LINN FOR APPROVAL PRIOR TO ANY CONSTRUCTION WORK.

26. PRIOR TO COMMENCING CONSTRUCTION, THE CONTRACTOR SHALL PRESENT AT THE PRE-CONSTRUCTION MEETING A LIST OF SUBCONTRACTORS, A PROJECT SCHEDULE, A TRAFFIC CONTROL PLAN, AND AN EMERGENCY CONTACT NAME AND PHONE NUMBER.

27. THE CONTRACTOR SHALL COORDINATE AND SCHEDULE ALL EARTHWORK, TRENCH BACKFILL, COMPACTION TESTS, REVIEWS, STAGED INSPECTIONS, AND OTHER GEOTECHNICAL RELATED ITEMS WITH THE PROJECT'S GEOTECHNICAL ENGINEER.

28. THE CONTRACTOR SHALL MAINTAIN BENCHMARKS, PROPERTY CORNERS, MONUMENTS, AND OTHER REFERENCE POINTS. IF SUCH POINTS ARE DISTURBED OR DESTROYED BY CONSTRUCTION ACTIVITIES, THE CONTRACTOR SHALL NOTIFY THE PROJECT ENGINEER AND PAY FOR THEIR REPLACEMENT BY EMPLOYING A PROFESSIONAL LAND SURVEYOR TO RESET PROPERTY CORNERS AND OTHER SUCH MONUMENTS.

29. PRIOR TO FINAL ACCEPTANCE AND PAYMENT, THE CONTRACTOR SHALL CLEAN THE WORK SITE AND ADJACENT AREAS OF ANY DEBRIS, DISCARDED ASPHALTIC CONCRETE MATERIAL, OR OTHER ITEMS DEPOSITED BY THE CONTRACTOR'S PERSONNEL DURING THE PERFORMANCE OF THIS CONTRACT.

30. PUBLIC ROADWAYS SHALL NOT BE CLOSED TO TRAFFIC, AT ANY TIME, WITHOUT HAVING FIRST OBTAINED WRITTEN APPROVAL FROM THE THE CITY OF WEST LINN. THE CONTRACTOR IS RESPONSIBLE FOR PROVISION OF TIMELY NOTIFICATION OF TRAFFIC FLOW DISRUPTIONS TO AREA WIDE EMERGENCY SERVICES AND OTHER APPLICABLE ENTITIES.

31. THE CONTRACTOR SHALL NOTIFY THE PROJECT ENGINEER AND ALL THE CITY OF WEST LINNS FORTY-EIGHT (48) HOURS PRIOR TO ANY STAGED INSPECTION.

32. A COPY OF THE PERMIT WITH ALL ATTACHMENTS, A COPY OF THE APPROVED CONSTRUCTION PLANS, AND ALL AMENDMENTS SHALL BE AVAILABLE AT THE PROJECT SITE AT ALL TIMES. ALL WORK SHALL CONFORM TO THE PERMIT TERMS, CONDITIONS/PROVISIONS, APPROVED CONSTRUCTION PLANS, APPROVED PLAN AMENDMENTS, AND THESE GENERAL CONDITIONS. CHANGES TO ANY OF THE AFORESAID MUST BE APPROVED BY THE PROJECT ENGINEER AND THE CITY OF WEST LINN, IN ADVANCE OF WORK PERFORMANCE.

33. MAINTENANCE OF THE WORK AREA AND APPROACH ROADS IS THE RESPONSIBILITY OF THE CONTRACTOR. THE WORK AREA AND APPROACH ROADS SHALL BE MAINTAINED IN A CLEAN AND SANITARY CONDITION, FREE FROM OBSTRUCTIONS, HAZARDS, DEBRIS, AND TRASH AT ALL TIMES. A COPY OF THE CONTRACTOR CERTIFICATE OF INSURANCE SHALL BE AVAILABLE AT THE PROJECT SITE.

34. THE SPREADING OF MUD OR DEBRIS OR STORAGE OF MATERIAL OR EQUIPMENT OF ANY KIND UPON ANY PUBLIC ROADWAY IS STRICTLY PROHIBITED. THE PROJECT ENGINEER AND/OR CITY OF WEST LINN REPRESENTATIVE MAY AT ANY TIME ORDER IMMEDIATE CLEAN UP AND STOPPAGE OF WORK TO ACCOMPLISH CLEAN UP.

35. EFFECTIVE EROSION CONTROL IS REQUIRED. EROSION CONTROL DEVICES MUST BE INSTALLED AND MAINTAINED THROUGHOUT CONSTRUCTION. EROSION CONTROL MEASURES SHALL BE APPROVED BY THE THE CITY OF WEST LINN.

36. THESE PLANS AND SPECIFICATIONS ASSUME "DRY WEATHER" CONSTRUCTION. ADDITIONAL MEASURES MAY BE REQUIRED FOR "WET WEATHER" CONSTRUCTION.

37. PROPERTY DISTURBED BY CONSTRUCTION ACTIVITY SHALL BE SEEDED. SHRUBS, FLOWERS, BARK DUST, EXISTING SIGNS, PAVEMENT MARKINGS, MAILBOXES, ETC. DISTURBED BY CONSTRUCTION ACTIVITY SHALL BE RE-ESTABLISHED, REINSTALLED, OR REPLACED, WITH LIKE KIND AND MATERIAL.

38. WORK PROVIDED FOR UNDER THE PERMIT SHALL INCLUDE REPAIR OF EXISTING FACILITIES (ROADS, DITCHES, ETC.) AS MAY BE NECESSARY, IN THE PROJECT ENGINEER'S OPINION, TO OVERCOME DETERIORATION OR DAMAGE WHICH OCCURRED IN CONJUNCTION WITH THE WORK AUTHORIZED BY THE PERMIT. CORRECTIVE WORK SHALL BE DONE AT THE CONTRACTOR'S EXPENSE.

39. THE CONTRACTOR SHALL PROVIDE ALL THE 'MEANS AND METHODS" NECESSARY TO COMPLETE THE PROJECT IN ACCORDANCE WITH THE APPROVED DRAWINGS AND DOCUMENTS. THE CONTRACTOR IS RESPONSIBLE FOR ALL REPAIRS AND DAMAGE TO ALL ITEMS THAT ARE TO REMAIN. ALL REPAIRS SHALL USE NEW MATERIAL. REPAIRS SHALL RESTORE THE DAMAGED ITEM TO THE PRE-EXISTING CONDITION OR BETTER. SUCH REPAIRS SHALL BE PERFORMED AT THE CONTRACTOR'S SOLE EXPENSE.

40. EXISTING LANDSCAPING MATERIALS, IRRIGATION, APPURTENANCES, AND STRUCTURES, WHICH ARE NOT TO BE REMOVED, SHALL BE PROTECTED FROM DAMAGE AT ALL TIMES. DAMAGE CAUSED BY CONSTRUCTION OPERATIONS SHALL BE REPLACED OR REPAIRED TO EXISTING OR BETTER CONDITION AT NO ADDITIONAL COST TO THE OWNER.

41. UNTIL ACCEPTANCE OF THE PROJECT, THE CONTRACTOR SHALL AT ALL TIMES PROTECT FROM DAMAGE ALL PUBLIC PROPERTY AND PRIVATE PROPERTY WHICH MAY BE AFFECTED BY THE WORK AND PRESERVE ALL MATERIALS, SUPPLIES, AND EQUIPMENT, AND ALL WORK ALREADY PERFORMED, FROM THE NATURE OF THE WORK, THE ACTION OF THE ELEMENTS, AND DAMAGE BY ANY PERSON OR PERSONS OR FROM ANY OTHER CAUSE. ANY WORK OR MATERIALS LOST, REMOVED OR DAMAGED BY ANY CAUSE OR FOR ANY REASON SHALL BE THE RESPONSIBILITY OF THE CONTRACTOR UNTIL SUCH TIME AS THE THE CITY OF WEST LINN HAS INDICATED ACCEPTANCE AND APPROVAL OF THE SAME. THE CONTRACTOR SHALL FURNISH EITHER HARD COPY OR DIGITAL PHOTOS/VIDEOS OF ALL PUBLIC/PRIVATE EXISTING SITE PROJECT SURROUNDINGS PRIOR TO START OF WORK.

42. EFFECTIVE DRAINAGE CONTROL IS REQUIRED. DRAINAGE SHALL BE CONTROLLED WITHIN THE SITE AND SHALL BE ROUTED SO THAT ADJACENT PRIVATE PROPERTY, PUBLIC PROPERTY, AND THE RECEIVING SYSTEM ARE NOT ADVERSELY IMPACTED. THE PROJECT ENGINEER AND/OR THE CITY OF WEST LINN MAY AT ANY TIME ORDER CORRECTIVE ACTION AND STOPPAGE OF WORK TO ACCOMPLISH EFFECTIVE DRAINAGE CONTROL.

43. THE PROJECT ENGINEER MAY, AT THEIR DISCRETION, REQUIRE PROVISION OF TESTS AND OR REPORTS FROM THE CONTRACTOR TO VALIDATE CLAIMS OF MATERIAL OR CONSTRUCTION ADEQUACY/COMPLIANCE. SUCH TESTS/REPORTS SHALL BE PROVIDED AT THE CONTRACTOR'S EXPENSE.

44. THE PROJECT ENGINEER RESERVES THE RIGHT TO ADJUST GRADES OR ALIGNMENT AS NECESSARY; SUCH ADJUSTMENTS OR REVISIONS SHALL BE REVIEWED BY THE THE CITY OF WEST LINNAL ENGINEERING STAFF AND APPROVED PRIOR TO COMMENCEMENT OF WORK.

45. PIPE LENGTHS SHOWN ARE APPROXIMATE. FINAL LENGTHS SHALL BE DETERMINED BY FIELD CONDITIONS. PIPE SLOPES LISTED ARE BASED ON HORIZONTAL LENGTHS FROM CENTER OF STRUCTURE (E.G. MANHOLE) TO CENTER OF STRUCTURE (E.G. MANHOLE). INVERT ELEVATIONS (IES) LISTED AT STRUCTURES ARE BASED ON THE "THEORETICAL" IE AT THE CENTER OF THE STRUCTURE. FIELD STAKING IS BASED ON THESE PIPE SLOPES AND INVERT ELEVATIONS. FOR PIPES WITH STEEP SLOPES AND/OR SHORT PIPE RUNS, THE CONTRACTOR NEEDS TO MAKE ADJUSTMENTS FOR THE ACTUAL SLOPE FROM EDGE OF STRUCTURE TO EDGE OF STRUCTURE AND/OR ENSURE PRE-CAST STRUCTURES (E.G. MANHOLE BASE) ACCOMMODATES THE ACTUAL IE AT THE EDGE OF THE STRUCTURE.

46. CATCH BASIN AND CURB INLET LEAD LENGTHS NOTED ARE TO THE CENTER (MIDPOINT) OF STRUCTURE AT FACE OF CURB. FIELD STAKING IS BASED ON CENTER (MIDPOINT) OF STRUCTURE AT FACE OF CURB UNLESS OTHERWISE NOTED OR OTHER ARRANGEMENTS ARE MADE WITH THE PROJECT SURVEYOR.

47. PROPERTY AND RIGHT-OF-WAY LINES SHOWN ARE APPROXIMATE. THESE PLANS ARE NOT MEANT TO SERVE BOUNDARY SURVEY PURPOSES.

48. THERE SHALL BE NO ALTERATION OR VARIANCE FROM THE APPROVED PLANS WITHOUT APPROVAL OF THE PROJECT ENGINEER.

49. SAWCUT STRAIGHT MATCH LINES WHERE EXISTING PAVEMENT MEETS NEW PAVEMENT. SAND AND SEAL JOINT (TYPICAL).

50. THE SAWCUT LINES SHOWN ON THE DRAWINGS ARE SCHEMATIC AND NOT INTENDED TO SHOW THE EXACT ALIGNMENT OF SUCH CUTS.

51. NEW PAVEMENT SHALL MATCH EXISTING PAVEMENT AS REQUIRED TO PROVIDE A SMOOTH, FREE DRAINING SURFACE.

52. EXISTING BURIED UTILITIES, WHICH ARE TO BE ABANDONED, SHOULD BE ABANDONED AND/OR REMOVED AS REQUIRED BY THE PROJECT ENGINEER AND THE CITY OF WEST LINN.

53. DUST SHALL BE CONTROLLED WITHIN THE DEVELOPMENT DURING CONSTRUCTION AND SHALL NOT BE PERMITTED TO DRIFT ONTO ADJACENT PROPERTIES.

54. CONTRACTOR SHALL CONFORM TO OSHA REQUIREMENTS AT ALL TIMES.

55. STORM AND SANITARY SEWER LINES SHALL BE LAID IN A STRAIGHT ALIGNMENT AND A UNIFORM GRADE BETWEEN MANHOLES AND CLEANOUTS. STORM AND SANITARY SEWER LINES SHALL BE INSTALLED SO THAT THE PIPE BELL IS POSITIONED AT THE UPSTREAM END OF THE SEWER LINE AND THE PIPE SPIGOT IS POSITIONED AT THE DOWNSTREAM END OF THE SEWER LINE.

56. CONTRACTOR IS RESPONSIBLE FOR SITE JOB SAFETY, WHICH SHALL INCLUDE BUT NOT BE LIMITED TO THE INSTALLATION AND MAINTENANCE OF BARRIERS, FENCING, AND OTHER APPROPRIATE SAFETY ITEMS NECESSARY TO PROTECT THE PUBLIC FROM AREAS OF CONSTRUCTION AND CONSTRUCTION ACTIVITY.

57. THE PROJECT ENGINEER IS NOT RESPONSIBLE FOR REVIEWING THE CONTRACTOR'S SAFETY PRECAUTIONS OR THE MEANS, METHODS, TECHNIQUES, SEQUENCES, OR PROCEDURES REQUIRED FOR THE CONTRACTOR TO PERFORM THEIR WORK.

58. CONTRACTOR IS RESPONSIBLE FOR COORDINATING AND OBTAINING ALL REQUIRED TESTING AND INSPECTIONS FOR THE PROJECT.

59. THE CONTRACTOR SHALL BE RESPONSIBLE TO ENSURE THAT ALL REQUIRED OR NECESSARY INSPECTIONS ARE COMPLETED BY AUTHORIZED INSPECTORS PRIOR TO PROCEEDING WITH SUBSEQUENT WORK WHICH COVERS OR THAT IS DEPENDENT ON THE WORK TO BE INSPECTED. FAILURE TO OBTAIN NECESSARY INSPECTION(S) AND APPROVAL(S) SHALL RESULT IN THE CONTRACTOR BEING FULLY RESPONSIBLE FOR ALL PROBLEMS AND/OR CORRECTIVE MEASURES ARISING FROM UNINSPECTED WORK. INSPECTIONS SHALL BE SCHEDULED 24 HOURS PRIOR.

60. TESTING DOES NOT RELIEVE THE CONTRACTOR OF THE RESPONSIBILITY OF OBTAINING ALL NECESSARY INSPECTIONS OR OBSERVATIONS FOR ALL WORK PERFORMED, REGARDLESS OF WHO IS RESPONSIBLE FOR PAYMENT. COST FOR RETESTING SHALL BE BORNE BY THE CONTRACTOR.

61. ANY INSPECTION/OBSERVATION BY THE PROJECT ENGINEER OR PROJECT INSPECTOR SHALL NOT IN ANY WAY RELIEVE THE CONTRACTOR FROM ANY OBLIGATION TO PERFORM THE WORK IN COMPLIANCE WITH THE APPLICABLE CODES, REGULATIONS, STANDARDS, PLANS, SPECIFICATIONS, AND PROJECT CONTRACT DOCUMENTS.

62. DEBRIS AND TRASH SHALL NOT BE BURIED OR STOCKPILED ON THE SUBJECT SITE. ALL DEMOLITION WASTES AND DEBRIS SHALL BE DISPOSED OF IN ACCORDANCE WITH ALL LOCAL, STATE, AND FEDERAL LAWS AND REGULATIONS. THE CONTRACTOR SHALL MAINTAIN RECORDS TO DEMONSTRATE PROPER DISPOSAL ACTIVITIES, TO BE PROVIDED TO THE OWNER OR PROJECT ENGINEER UPON REQUEST.

63. CONTRACTOR SHALL SECURE ALL NECESSARY PERMITS AND APPROVALS FOR OFF SITE DISPOSAL FACILITIES AND SUPPLY A COPY OF APPROVALS TO THE OWNER'S REPRESENTATIVE UPON REQUEST.

64. CONTRACTOR SHALL MONITOR THE HAULING OF DEBRIS TO INSURE THAT ALL SPILLAGE FROM TRUCKS IS PROMPTLY AND COMPLETELY REMOVED AND CLEANED UP.

65. CONTRACTOR SHALL CLEAN ADJACENT STRUCTURES AND IMPROVEMENTS OF DUST, DIRT, AND DEBRIS CAUSED BY DEMOLITION OPERATIONS. RETURN ADJACENT AREAS TO CONDITIONS EXISTING PRIOR TO THE START OF THE WORK.

66. SITE CONSTRUCTION SHALL BE LIMITED TO 7:00AM TO 7:00PM ON WEEKDAYS, AND 9:00AM TO 5:00PM ON SATURDAYS/SUNDAYS AND HOLIDAYS. A SIGN SHALL BE POSTED WITH WORK HOURS AT THE CONSTRUCTION SITE. NOISE SHALL BE KEPT AT THE MINIMUM LEVEL POSSIBLE DURING CONSTRUCTION. THE DEVELOPER SHALL AGREE TO AGGRESSIVELY ENSURE ALL VEHICLES WORKING ON THE DEVELOPMENT SHALL HAVE ADEQUATE AND FULLY FUNCTIONING SOUND SUPPRESSION DEVICES INSTALLED AND MAINTAINED AT ALL TIMES.

67. THE CONTRACTOR SHALL CONSULT THE FIRE MARSHAL ON THE NEED FOR A FIRE PREVENTION AND CONTROL PLAN DURING THE PERIOD OF SITE DEVELOPMENT. IF THE FIRE MARSHAL DETERMINES THE NEED FOR SUCH A PLAN, THE CONTRACTOR SHALL PREPARE SUCH PLAN IN ACCORDANCE WITH THE REQUIREMENTS AND SPECIFICATIONS OF THE FIRE MARSHAL AND SHALL FILE A COPY WITH THE CITY.

68. ALL FACILITIES SHALL BE MAINTAINED IN-PLACE BY THE CONTRACTOR UNLESS OTHERWISE SHOWN OR DIRECTED. CONTRACTOR SHALL TAKE ALL PRECAUTIONS NECESSARY TO SUPPORT, MAINTAIN, OR OTHERWISE PROTECT EXISTING UTILITIES AND OTHER FACILITIES AT ALL TIMES DURING CONSTRUCTION. CONTRACTOR SHALL LEAVE EXISTING FACILITIES IN AN EQUAL OR BETTER-THAN-ORIGINAL CONDITION.

69. WHERE TRENCH EXCAVATION REQUIRES REMOVAL OF CURBS AND/OR SIDEWALKS, THE CURBS AND/OR SIDEWALKS SHALL BE SAWCUT AND REMOVED AT A TOOLED JOINT UNLESS OTHERWISE AUTHORIZED BY THE OWNER'S REPRESENTATIVE. THE SAWCUT LINES SHOWN ON THE PLANS ARE SCHEMATIC AND NOT INTENDED TO SHOW THE EXACT ALIGNMENT OF SUCH CUTS.

70. THE CONTRACTOR SHALL REMOVE AND DISPOSE OF TREES, STUMPS, BRUSH, ROOTS, TOPSOIL, AND OTHER MATERIAL IN THE ROADWAY AND WHERE INDICATED ON THE PLANS. MATERIAL SHALL BE DISPOSED OF IN SUCH A MANNER AS TO MEET ALL APPLICABLE REGULATIONS.

71. UPON COMPLETION OF CONSTRUCTION, THE CONTRACTOR SHALL SUBMIT "REDLINE DRAWINGS" TO THE PROJECT ENGINEER. "REDLINE DRAWINGS" DOCUMENT ALL DEVIATIONS AND REVISIONS TO THE APPROVED PLANS; THEY ALSO RECORD A DESCRIPTION OF CONSTRUCTION MATERIALS ACTUALLY USED (PIPE MATERIAL, ETC).

72. THE CONTRACTOR SHALL PERFORM ALL WORK NECESSARY TO COMPLETE THIS PROJECT IN ACCORDANCE WITH THE PLANS AND SPECIFICATIONS INCLUDING SUCH INCIDENTALS, AS MAY BE NECESSARY TO MEET THE INTENT OF THE PROJECT CONTRACT DOCUMENTS, APPLICABLE AGENCY REQUIREMENTS, AND OTHER WORK AS NECESSARY TO PROVIDE A COMPLETE PROJECT.

73. THE CONTRACTOR SHALL MAINTAIN AND COORDINATE ACCESS TO ALL AFFECTED PROPERTIES.

74. IF GROUND WATER SPRINGS ARE ENCOUNTERED DURING CONSTRUCTION, THE CONTRACTOR SHALL TAKE MEASURES TO ENSURE THAT THE WATER IS NOT CONVEYED THROUGH UTILITY TRENCHES, AND THE NATURAL FLOW PATH OF THE SPRING IS ALTERED AS LITTLE AS PRACTICABLE.

75. CONTRACTOR SHALL PROVIDE ALL BONDS AND INSURANCE REQUIRED BY PUBLIC AND/OR PRIVATE AGENCIES HAVING JURISDICTION.

76. ALL MATERIALS AND WORKMANSHIP FOR FACILITIES IN STREET RIGHT-OF-WAY OR EASEMENTS SHALL CONFORM TO APPROVING AGENCIES' CONSTRUCTION SPECIFICATIONS WHEREIN EACH HAS JURISDICTION.

77. CONTRACTOR SHALL NOTIFY THE PROJECT ENGINEER AND OWNER OF ANY SEPTIC TANKS, WELLS, OR FUEL TANKS ENCOUNTERED DURING CONSTRUCTION.

78. ANY SEPTIC TANKS ENCOUNTERED DURING CONSTRUCTION SHALL BE PUMPED OUT. CONTRACTOR SHALL BREAK BOTTOM OF TANK OUT AND BACKFILL WITH PEA GRAVEL UNLESS OTHERWISE REQUIRED BY PUBLIC AGENCIES HAVING JURISDICTION. SEPTIC TANK REMOVAL TO BE IN ACCORDANCE WITH CITY REQUIREMENTS.

79. ANY WELLS ENCOUNTERED SHALL BE ABANDONED PER STATE OF OREGON WATER RESOURCES DEPARTMENT REQUIREMENTS.

80. ANY FUEL TANKS ENCOUNTERED SHALL BE REMOVED AND DISPOSED OF PER STATE OF OREGON DEQ REQUIREMENTS. BACKFILL WITH COMPACTED GRANULAR MATERIAL.

81. PAVING OF STREETS SHALL NOT BE ALLOWED UNTIL AFTER COMPLETION OF ALL REQUIRED TESTING AND INSPECTION OF NEW WATER, SEWER AND STORM DRAIN LINES UNDER PAVED AREAS, AND REVIEW AND APPROVAL OF THE PRIVATE (FRANCHISE) UTILITY PLANS BY THE CITY ENGINEER.

82. ALL EXISTING OR CONSTRUCTED MANHOLES, CLEANOUTS, MONUMENTS, GAS VALVES, WATER VALVES AND SIMILAR STRUCTURES SHALL BE ADJUSTED TO MATCH FINISH GRADE OF THE PAVEMENT, SIDEWALK, LANDSCAPED AREA OR MEDIAN STRIP WHEREIN THEY LIE.

83. CONTRACTOR SHALL STRAW-SEED OR HYDRO-SEED ALL EXPOSED SLOPES AND DISTURBED AREAS WHICH ARE NOT SCHEDULED TO BE LANDSCAPED.

84. ALL PIPED UTILITIES ABANDONED IN-PLACE SHALL HAVE ALL OPENINGS CLOSED WITH CONCRETE PLUGS WITH A MINIMUM LENGTH EQUAL TO 2 TIMES THE DIAMETER OF THE ABANDONED PIPE.

NOTIFICATION

GENERAL – THE CONTRACTOR SHALL, AS A MINIMUM, COORDINATE THE CONSTRUCTION ACTIVITIES WITH THE OWNER AND THE LOCAL PUBLIC AGENCIES, UTILITIES AND COMPANIES DURING CONSTRUCTION TO AVOID DAMAGE AND TO PREVENT THE INTERRUPTION OF SERVICES AND UTILITIES TO RESIDENTS AND BUSINESSES:

ONE CALL LOCATE – OREGON
UTILITIES NOTIFICATION CENTER
(503) 246-6699

LEGEND

	EXISTING	PROPOSED
DECIDUOUS TREE		
CONIFEROUS TREE		
FIRE HYDRANT		
WATER BLOWOFF		
WATER METER		
WATER VALVE		
DOUBLE CHECK VALVE		
AIR RELEASE VALVE		
SANITARY SEWER CLEAN OUT		
SANITARY SEWER MANHOLE		
SIGN		
STREET LIGHT		
MAILBOX	MB	MB
STORM SEWER CLEAN OUT		
STORM SEWER CATCH BASIN		
STORM SEWER MANHOLE		
GAS METER		
GAS VALVE		
GUY WIRE ANCHOR		
POWER POLE		
POWER VAULT	P	P
POWER JUNCTION BOX		
POWER PEDESTAL		
COMMUNICATIONS VAULT	C	C
COMMUNICATIONS JUNCTION BOX		
COMMUNICATIONS RISER		

	EXISTING	PROPOSED
RIGHT-OF-WAY LINE		
BOUNDARY LINE		
PROPERTY LINE		
CENTERLINE		
DITCH		
CURB		
EDGE OF PAVEMENT		
EASEMENT		
FENCE LINE		
GRAVEL EDGE		
POWER LINE	PWR	PWR
OVERHEAD WIRE	OHW	OHW
COMMUNICATIONS LINE	COM	COM
FIBER OPTIC LINE	CFO	CFO
GAS LINE	GAS	GAS
STORM SEWER LINE	STM	STM
SANITARY SEWER LINE	SAN	SAN
WATER LINE	WAT	WAT

AKS
AKS ENGINEERING & FORESTRY, LLC
12965 SW HERMAN RD STE 100
TUALATIN, OR 97062
P: 503.563.6151
F: 503.563.6152
aks-eng.com
ENGINEERING · SURVEYING · NATURAL RESOURCES
FORESTRY · PLANNING · LANDSCAPE ARCHITECTURE

KNOLLCREST SUBDIVISION

WEST LINN OREGON
TAX LOTS 100 & 200 CLACKAMAS COUNTY TAX MAP 2 1E 25CC

GENERAL CONSTRUCTION NOTES & LEGEND

DESIGNED BY: CLR
DRAWN BY: NSL/AMF
CHECKED BY: RSW
SCALE: AS NOTED
DATE: 07/30/2018

REGISTERED PROFESSIONAL ENGINEER 58542PE OREGON JULY 9, 2002 MONTGOMERY B. HURLEY
RENEWAL DATE: 6/30/19

REVISIONS

JOB NUMBER 5132

SHEET C002

AKS DRAWING FILE: 5132 C000 COVER.DWG | LAYOUT: C002

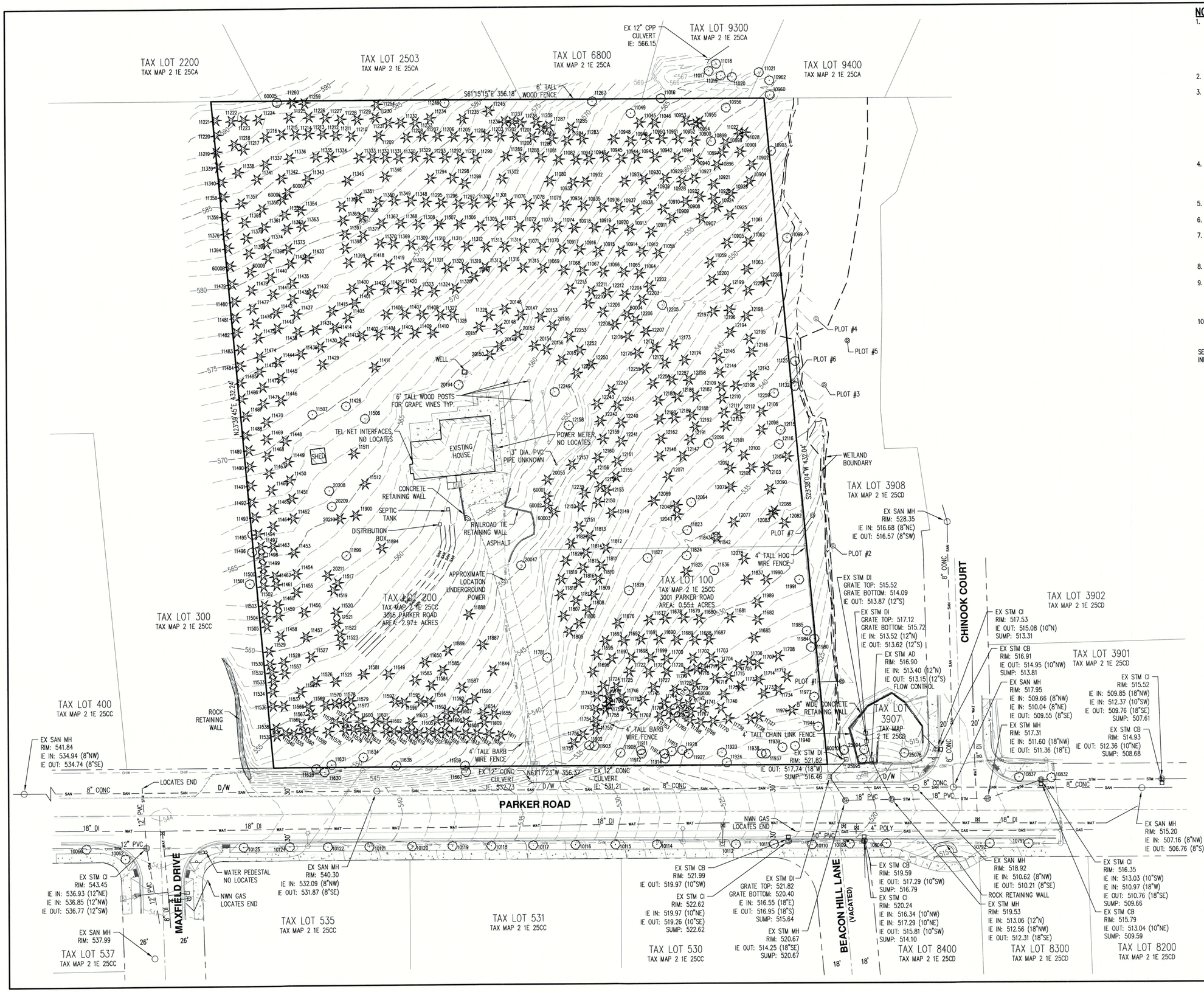

NOTES:

1. UTILITIES SHOWN ARE BASED ON UNDERGROUND UTILITY LOCATE MARKINGS AS PROVIDED BY OTHERS, PROVIDED PER UTILITY LOCATE TICKET NUMBER 17125955. THE SURVEYOR MAKES NO GUARANTEE THAT THE UNDERGROUND LOCATES REPRESENT THE ONLY UTILITIES IN THE AREA. CONTRACTORS ARE RESPONSIBLE FOR VERIFYING ALL EXISTING CONDITIONS PRIOR TO BEGINNING CONSTRUCTION.
2. FIELD WORK WAS CONDUCTED MAY 24 – JUNE 09, 2017.
3. HORIZONTAL DATUM: A LOCAL DATUM PLANE DERIVED FROM TRIMBLE VRS NOW NETWORK OREGON STATE PLANE NORTH 3601 NAD83 (2011) EPOCH 2010.0000 BY HOLDING A PROJECT MEAN GROUND COMBINED SCALE FACTOR OF 1.0001225107 AT A CALCULATED CENTRAL PROJECT POINT WITH INTERNATIONAL FOOT GRID VALUES OF A NORTHING OF 625,896.23, AND A EASTING OF 7,653,092.61, AND MERIDIAN CONVERGENCE ANGLE OF –1°30'54" AT THE CENTRAL POINT.
4. VERTICAL DATUM: ELEVATIONS ARE DERIVED BY TRIMBLE VRS NOW NETWORK, AND CHECKED AGAINST NGS BENCHMARK NO. QE1501. LOCATED ALONG HWY 99E AND THE JUNCTION OF INTERSTATE HWY 205 ELEVATION = 81.25 FEET (NAVD 88).
5. THIS MAP DOES NOT CONSTITUTE A PROPERTY BOUNDARY SURVEY.
6. SURVEY IS ONLY VALID WITH SURVEYOR'S STAMP AND SIGNATURE.
7. BUILDING FOOTPRINTS ARE MEASURED TO SIDING UNLESS NOTED OTHERWISE. CONTACT SURVEYOR WITH QUESTIONS REGARDING BUILDING TIES.
8. CONTOUR INTERVAL IS 1 FOOT.
9. TREES WITH DIAMETER OF 6" AND GREATER ARE SHOWN. TREE DIAMETERS WERE MEASURED UTILIZING A DIAMETER TAPE AT BREAST HEIGHT. TREE INFORMATION IS SUBJECT TO CHANGE UPON ARBORIST INSPECTION.
10. WETLAND BOUNDARIES SHOWN WERE DELINEATED BY AKS ENGINEERING & FORESTRY, LLC. ON MAY 30, 2017 AND WERE PROFESSIONALLY SURVEYED BY AKS ON JUNE 6, 2017.

SEE SHEETS C030 – C034 FOR TREE PRESERVATION AND REMOVAL INFORMATION

AKS ENGINEERING & FORESTRY, LLC
12965 SW HERMAN RD STE 100
TUALATIN, OR 97062
P: 503.563.6151
F: 503.563.6152
aks-eng.com

ENGINEERING · SURVEYING · NATURAL RESOURCES
FORESTRY · PLANNING · LANDSCAPE ARCHITECTURE

KNOLLCREST SUBDIVISION

WEST LINN — OREGON
TAX LOTS 100 & 200 — CLACKAMAS COUNTY, TAX MAP 2 1E 25CC

EXISTING CONDITIONS

DESIGNED BY:	
DRAWN BY:	ZJG
CHECKED BY:	RDR
SCALE:	AS NOTED
DATE:	07/30/2018

REGISTERED PROFESSIONAL LAND SURVEYOR
OREGON JANUARY 11, 2005 ROBERT D. RETTIG 60124LS
RENEWS: 12/31/20

REVISIONS

JOB NUMBER 5132

SHEET C003

AKS DRAWING FILE: 5132 C000 EXCOND.DWG | LAYOUT: C002

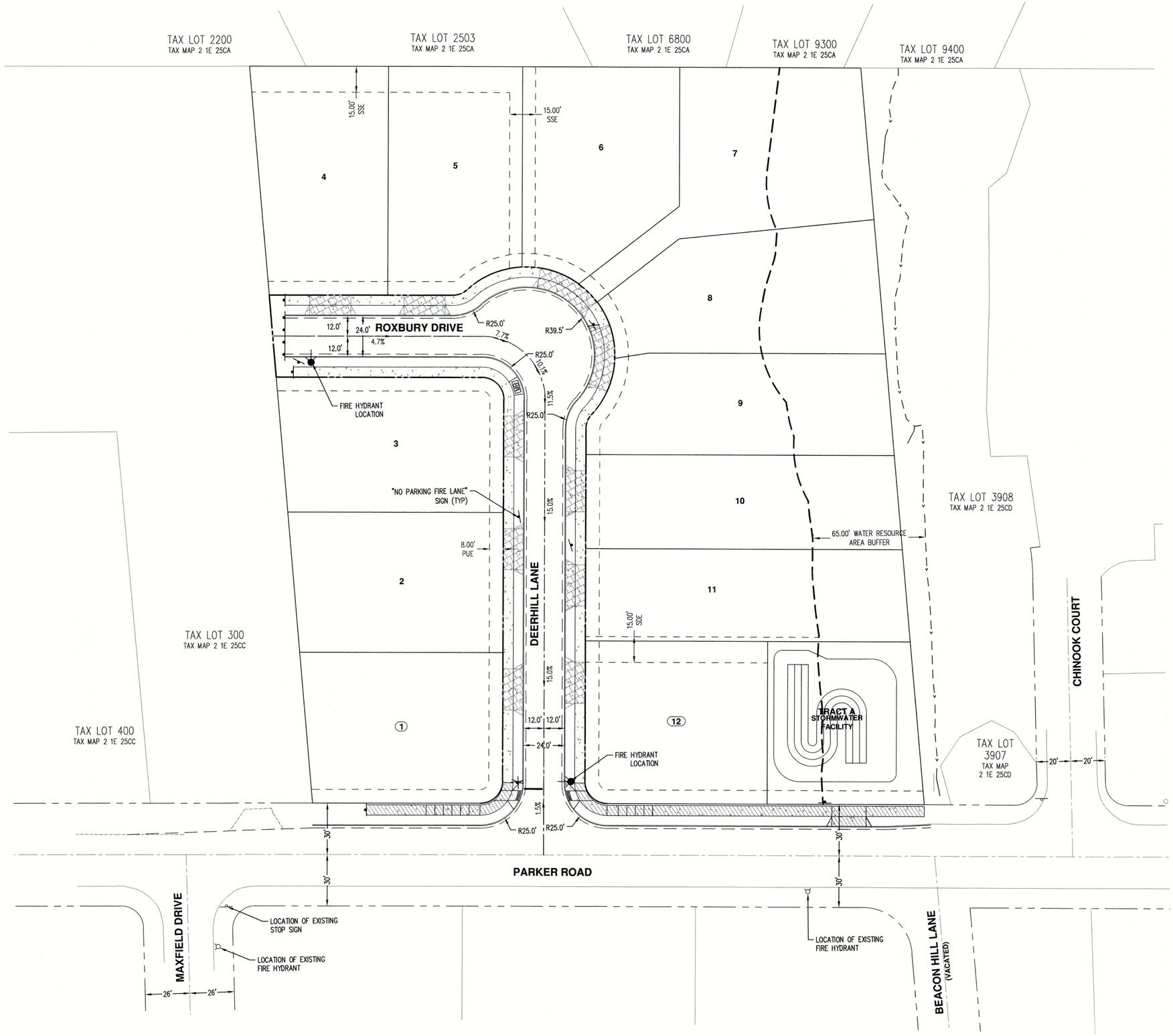

EASEMENT LEGEND

PUE: PUBLIC UTILITY EASEMENT
SDE: PUBLIC STORM DRAINAGE EASEMENT
SSE: PUBLIC SANITARY SEWER EASEMENT

LEGEND:

FIRE HYDRANT

0.0% SLOPE DIRECTION DOWNWARD GRADE

SCALE: 1"=30 FEET

30 0 12 18 24 30

AKS ENGINEERING & FORESTRY, LLC
12965 SW HERMAN RD STE 100
TUALATIN, OR 97062
P: 503.563.6151
F: 503.563.6152
aks-eng.com

AKS

ENGINEERING · SURVEYING · NATURAL RESOURCES
FORESTRY · PLANNING · LANDSCAPE ARCHITECTURE

KNOLLCREST SUBDIVISION

WEST LINN OREGON

TAX LOTS 100 & 200 CLACKAMAS COUNTY TAX MAP 2 1E 25CC

DIMENSIONED FIRE AND LIFE SAFETY PLAN

DESIGNED BY:	CLR
DRAWN BY:	NSL/AMF
CHECKED BY:	RSW
SCALE:	AS NOTED

DATE: 07/30/2018

REGISTERED PROFESSIONAL ENGINEER 58540PE OREGON JULY 9, 2002 MONTGOMERY B. HURLEY

RENEWAL DATE: 6/30/19

REVISIONS

JOB NUMBER
5132

SHEET
C004

AKS DRAWING FILE: 5132 C000 FIRE.DWG | LAYOUT: C004

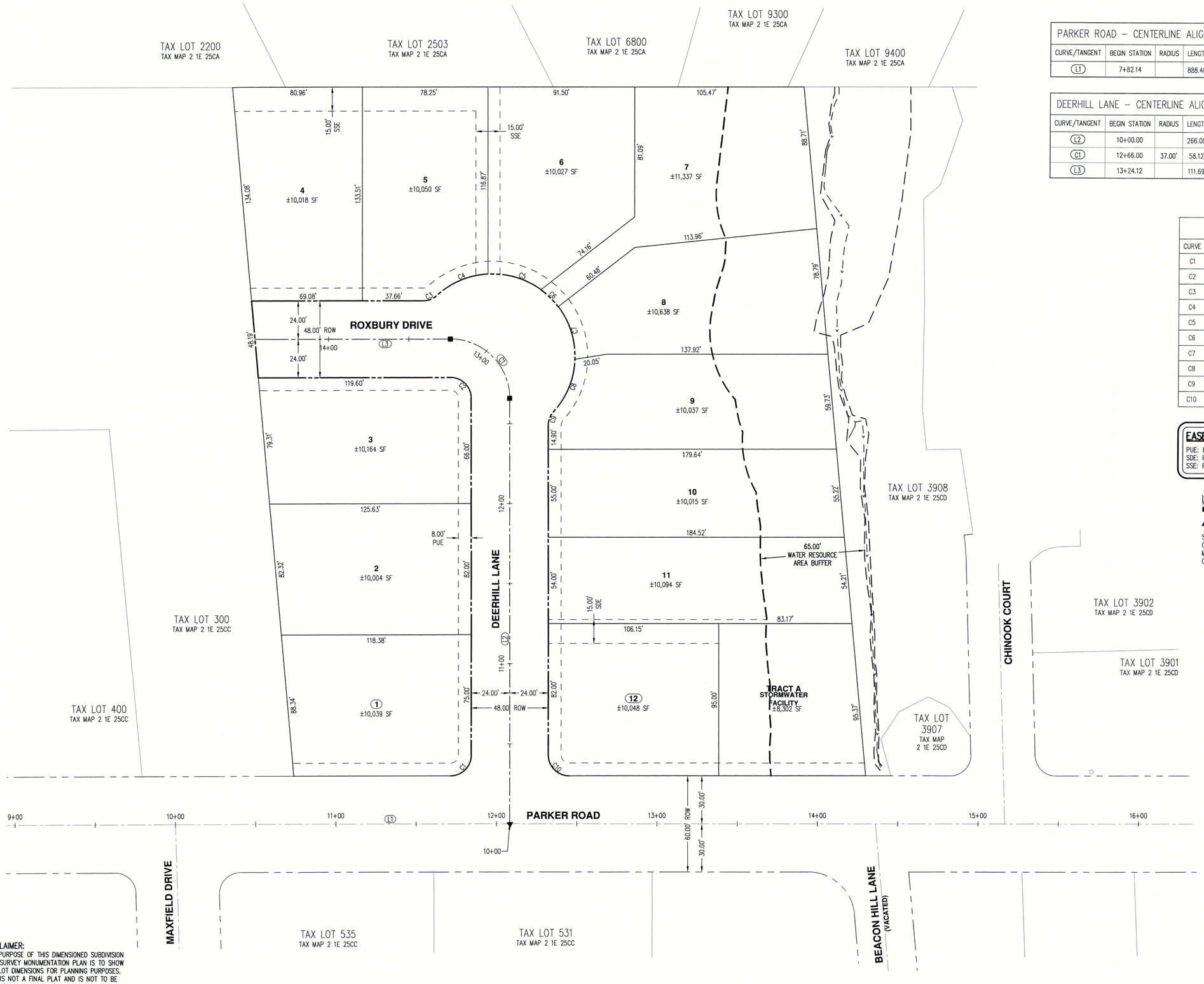

PARKER ROAD – CENTERLINE ALIGNMENT TABLE							
CURVE/TANGENT	BEGIN STATION	RADIUS	LENGTH	DELTA	CHORD	TANGENT/CHORD BEARING	END STATION
L1	7+82.14		888.40'			S61°17'23"E	16+70.54

DEERHILL LANE – CENTERLINE ALIGNMENT TABLE							
CURVE/TANGENT	BEGIN STATION	RADIUS	LENGTH	DELTA	CHORD	TANGENT/CHORD BEARING	END STATION
L2	10+00.00		266.00'			N28°42'37"E	12+66.00
C1	12+66.00	37.00'	58.12'	90°00'00"	52.33	N16°17'23"W	
L3	13+24.12		111.69'			N61°17'23"W	14+35.81

CURVE TABLE				
CURVE	RADIUS	DELTA	LENGTH	CHORD
C1	13.00'	90°00'00"	20.42'	S73°42'37"W 18.38'
C2	13.00'	90°00'00"	20.42'	S16°17'23"E 18.38'
C3	13.00'	42°07'37"	9.56'	N82°21'11"W 9.34'
C4	51.50'	39°09'33"	35.20'	N83°50'13"W 34.52'
C5	51.50'	39°02'28"	35.09'	N44°44'13"W 34.42'
C6	51.50'	16°53'51"	15.19'	N16°46'04"W 15.13'
C7	51.50'	39°04'20"	35.12'	N11°13'02"E 34.44'
C8	51.50'	40°05'03"	36.03'	N50°47'43"E 35.30'
C9	13.00'	42°07'39"	9.56'	N49°46'25"E 9.34'
C10	13.00'	90°00'00"	20.42'	N16°17'23"W 18.38'

EASEMENT LEGEND

PUE: PUBLIC UTILITY EASEMENT
SDE: PUBLIC STORM DRAINAGE EASEMENT
SSE: PUBLIC SANITARY SEWER EASEMENT

LEGEND:

■ MONUMENT BOX – 8 INCH FRAME

▲ MONUMENT BOX – 12 INCH FRAME

SEE CITY OF WEST LINN MONUMENT BOX DETAILS ON STREET CONSTRUCTION PLANS. CONTRACTOR SHALL VERIFY STYLE AND MANUFACTURER WITH CLACKAMAS COUNTY SURVEYOR PRIOR TO ORDERING MATERIALS.

NOTES:

1. TRACT A HAS A STORM DRAIN EASEMENT TO THE CITY OF WEST LINN OVER ITS ENTIRETY. TRACT A IS TO BE OWNED AND MAINTAINED BY THE CITY.
2. SURVEY MONUMENTS WILL BE SET AT ALL PROPERTY CORNERS, PLS, PTS, PIS, ETC.
3. THERE SHALL BE A MINIMUM ONE-FOOT SEPARATION BETWEEN MONUMENTS AND UTILITIES PER ORS 102.044(7).
4. CONTRACTOR SHALL PRESERVE ALL EXISTING MONUMENTS TO THE BEST OF THEIR ABILITY. IF ANY MONUMENTS ARE DESTROYED, CONTRACTOR SHALL NOTIFY PROJECT SURVEYOR IN A TIMELY MANNER TO RESET THE MONUMENT (ORS 209.150).

N

SCALE: 1" = 30 FEET

30 0 12 18 24 30

DISCLAIMER:
THE PURPOSE OF THIS DIMENSIONED SUBDIVISION AND SURVEY MONUMENTATION PLAN IS TO SHOW THE LOT DIMENSIONS FOR PLANNING PURPOSES. THIS IS NOT A FINAL PLAT AND IS NOT TO BE USED FOR SURVEYING PURPOSES.

AKS ENGINEERING & FORESTRY, LLC
12965 SW HERMAN RD STE 100
TUALATIN, OR 97062
P: 503.563.6151
F: 503.563.6152
aks-eng.com

ENGINEERING · SURVEYING · NATURAL RESOURCES
FORESTRY · PLANNING · LANDSCAPE ARCHITECTURE

KNOLLCREST SUBDIVISION

WEST LINN OREGON
TAX LOTS 100 & 200
CLACKAMAS COUNTY TAX MAP 2 1E 25CC

DIMENSIONED SUBDIVISION AND SURVEY MONUMENTATION PLAN

DESIGNED BY:	CLR
DRAWN BY:	NSL/AMF
CHECKED BY:	RSW
SCALE:	AS NOTED
DATE: 07/30/2018	

REGISTERED PROFESSIONAL ENGINEER 58546 OREGON JULY 9, 2002 MONTGOMERY B. HURLEY
RENEWAL DATE: 6/30/19

REVISIONS

JOB NUMBER
5132

SHEET
C010

AKS DRAWING FILE: 5132 C010 SITE.DWG | LAYOUT: C010

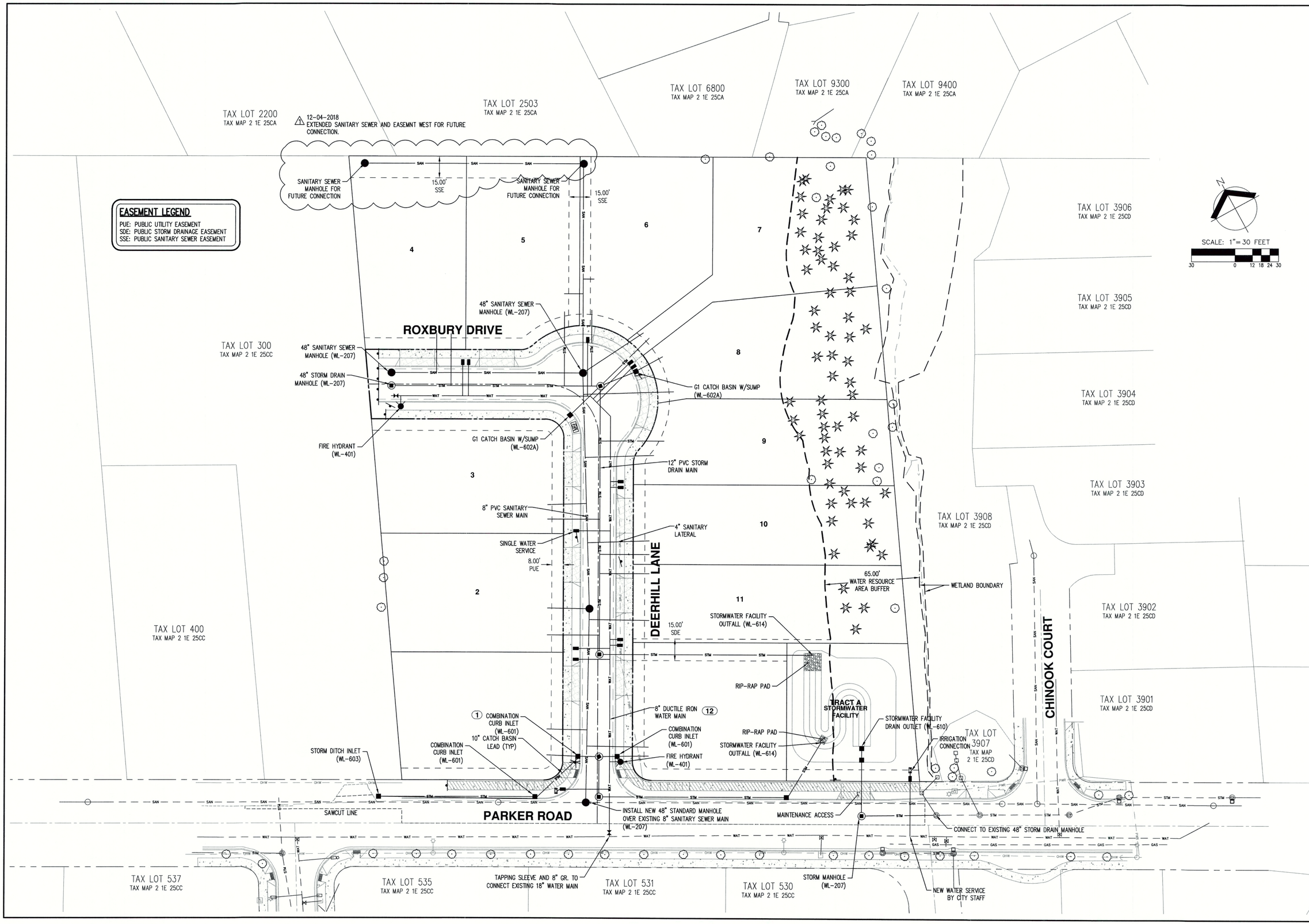

AKS ENGINEERING & FORESTRY, LLC
12965 SW HERMAN RD STE 100
TUALATIN, OR 97062
P: 503.563.6151
F: 503.563.6152
aks-eng.com

AKS

ENGINEERING · SURVEYING · NATURAL RESOURCES
FORESTRY · PLANNING · LANDSCAPE ARCHITECTURE

KNOLLCREST SUBDIVISION

WEST LINN OREGON
TAX LOTS 100 & 200
CLACKAMAS COUNTY TAX MAP 2 1E 25CC

COMPOSITE UTILITY PLAN

DESIGNED BY:	CLR
DRAWN BY:	NSL/AMF
CHECKED BY:	RSW
SCALE:	AS NOTED

DATE: 07/30/2018

REGISTERED PROFESSIONAL ENGINEER 58542PE OREGON JULY 9, 2002 MONTGOMERY B. HURLEY

RENEWAL DATE: 6/30/19

REVISIONS
1 12-04-2018

JOB NUMBER
5132

SHEET
C020

AKS DRAWING FILE: 5132 C020 COMP UTIL.DWG | LAYOUT: C020

KNOLLCREST SUBDIVISION

TREE PRESERVATION AND REMOVAL PLANS

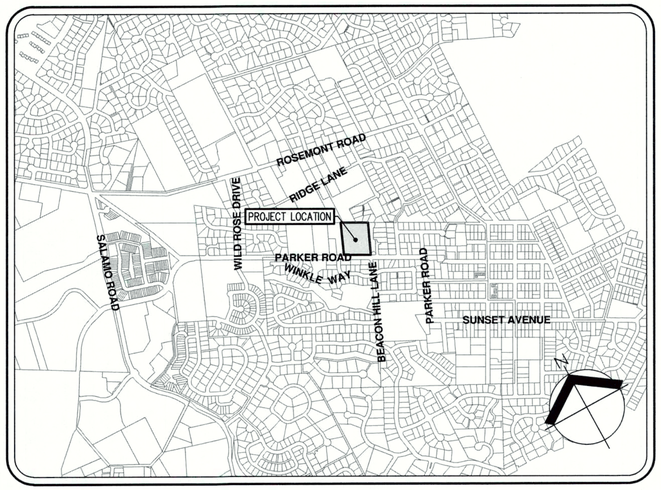

VICINITY MAP

SCALE: 1" = 500'

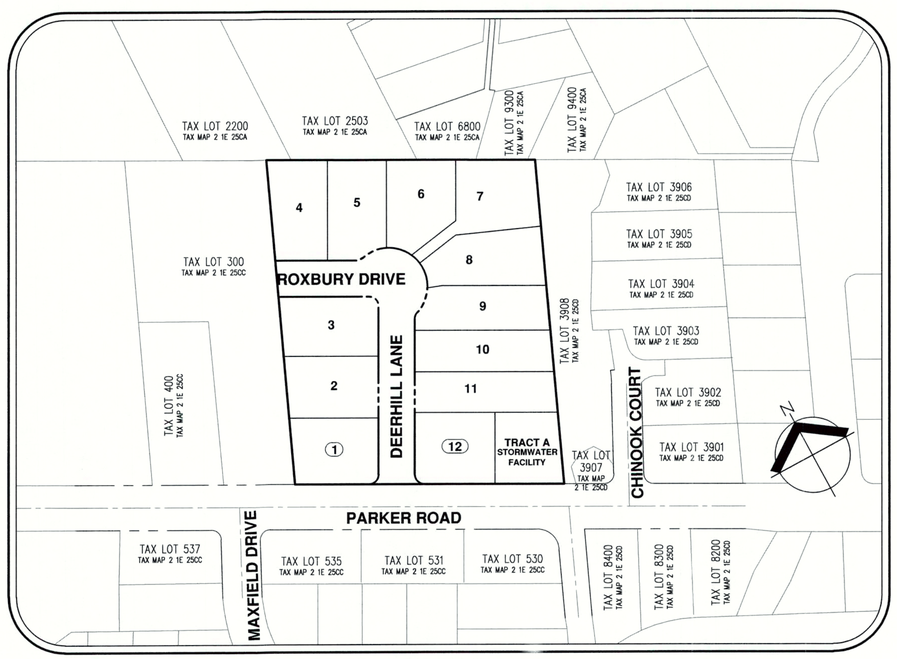

SITE MAP

SCALE: 1" = 100'

TREE PRESERVATION NOTES

PLACING MATERIALS NEAR TREES

1. NO PERSON MAY CONDUCT ANY ACTIVITY WITHIN THE TREE ROOT PROTECTION ZONE OF ANY TREE DESIGNATED TO REMAIN, INCLUDING, BUT NOT LIMITED TO, PARKING EQUIPMENT, PLACING SOLVENTS, STORING BUILDING MATERIAL AND SOIL DEPOSITS, DUMPING CONCRETE WASHOUT.

ATTACHMENTS TO TREES

1. DURING CONSTRUCTION, NO PERSON SHALL ATTACH ANY OBJECT TO ANY TREE DESIGNATED FOR PROTECTION.

PROTECTIVE BARRIER

BEFORE DEVELOPMENT, LAND CLEARING, FILLING, OR ANY LAND ALTERATION FOR WHICH A TREE REMOVAL PERMIT IS REQUIRED, THE CONTRACTOR:

1. SHALL ERECT AND MAINTAIN READILY VISIBLE PROTECTIVE TREE FENCING ALONG THE OUTER EDGE AND COMPLETELY SURROUNDING THE PROTECTED AREA OF ALL PROTECTED TREES. A CONSTRUCTION FENCE MUST BE PLACED AROUND EACH TREE AT THE EDGE OF THE ROOT PROTECTION ZONE. THE FENCE MUST BE PLACED BEFORE CONSTRUCTION STARTS AND REMAIN IN PLACE UNTIL CONSTRUCTION IS COMPLETE. SEE TREE PROTECTION FENCE DETAIL.
2. MAY BE REQUIRED TO COVER WITH MULCH TO A DEPTH OF AT LEAST SIX (6) INCHES OR WITH PLYWOOD OR SIMILAR MATERIAL TO THE AREAS ADJOINING THE TREE ROOT PROTECTION ZONE IN ORDER TO PROTECT ROOTS FROM DAMAGE CAUSED BY HEAVY EQUIPMENT.
3. SHALL PROHIBIT EXCAVATION OR COMPACTING OF EARTH OR OTHER POTENTIALLY DAMAGING ACTIVITIES WITHIN THE BARRIERS.
4. MAY BE REQUIRED TO MINIMIZE ROOT DAMAGE BY EXCAVATING A TWO (2) FOOT DEEP TRENCH, AT EDGE OF TREE ROOT PROTECTION ZONE, TO CLEANLY SEVER THE ROOTS OF TREES TO BE RETAINED. ROOTS 1" IN DIAMETER OR GREATER SHALL BE CLEANLY CUT WITH A SAW OR PRUNERS.
5. MAY BE REQUIRED TO HAVE CORRECTIVE PRUNING PERFORMED ON PROTECTED TREES IN ORDER TO AVOID DAMAGE FROM MACHINERY OR BUILDING ACTIVITY.
6. MAY BE REQUIRED TO MAINTAIN TREES THROUGHOUT CONSTRUCTION PERIOD BY WATERING AND FERTILIZING.
7. SHALL MAINTAIN THE PROTECTIVE BARRIERS IN PLACE UNTIL THE PROJECT ARBORIST AUTHORIZES THEIR REMOVAL OR A FINAL CERTIFICATE OF OCCUPANCY IS ISSUED, WHICHEVER OCCURS FIRST.
8. SHALL ENSURE THAT ANY LANDSCAPING DONE IN THE TREE ROOT PROTECTION ZONE SUBSEQUENT TO THE REMOVAL OF THE BARRIERS SHALL BE ACCOMPLISHED WITH LIGHT MACHINERY OR HAND LABOR. SEE NOTES ON THE LANDSCAPE PLAN.

GRADE

1. THE GRADE SHALL NOT BE ELEVATED OR REDUCED WITHIN THE TREE ROOT PROTECTION ZONE OF TREES TO BE PRESERVED WITHOUT THE PROJECT ARBORIST'S AUTHORIZATION. THE PROJECT ARBORIST MAY ALLOW COVERAGE OF UP TO ONE HALF OF THE AREA OF THE TREE'S CRITICAL ROOT ZONE WITH LIGHT SOILS (NO CLAY) TO THE MINIMUM DEPTH NECESSARY TO CARRY OUT GRADING OR LANDSCAPING PLANS, IF IT WILL NOT IMPERIL THE SURVIVAL OF THE TREE. AERATION DEVICES MAY BE REQUIRED TO ENSURE THE TREE'S SURVIVAL.
2. IF THE GRADE ADJACENT TO A PRESERVED TREE IS RAISED SUCH THAT IT COULD SLOUGH OR ERODE INTO THE TREE'S ROOT PROTECTION ZONE, IT SHALL BE PERMANENTLY STABILIZED TO PREVENT SUFFOCATION OF THE ROOTS.
3. THE APPLICANT SHALL NOT INSTALL AN IMPERVIOUS SURFACE WITHIN THE ROOT PROTECTION ZONE OF ANY TREE TO BE RETAINED WITHOUT THE AUTHORIZATION OF THE PROJECT ARBORIST. THE PROJECT ARBORIST MAY REQUIRE SPECIFIC CONSTRUCTION METHODS AND/OR USE OF AERATION DEVICES TO ENSURE THE TREE'S SURVIVAL AND TO MINIMIZE THE POTENTIAL FOR ROOT INDUCED DAMAGE TO THE IMPERVIOUS SURFACE.
4. TO THE GREATEST EXTENT PRACTICAL, UTILITY TRENCHES SHALL BE LOCATED OUTSIDE OF THE ROOT PROTECTION ZONE OF TREES TO BE RETAINED. THE PROJECT ARBORIST MAY REQUIRE THAT UTILITIES BE TUNNELED UNDER THE ROOTS OF TREES TO BE RETAINED IF THE PROJECT ARBORIST DETERMINES THAT TRENCHING WOULD SIGNIFICANTLY REDUCE THE CHANCES OF THE TREES SURVIVAL.
5. TREES AND OTHER VEGETATION TO BE RETAINED SHALL BE PROTECTED FROM EROSION AND SEDIMENTATION. CLEARING OPERATIONS SHALL BE CONDUCTED SO AS TO EXPOSE THE SMALLEST PRACTICAL AREA OF SOIL TO EROSION FOR THE LEAST POSSIBLE TIME. TO CONTROL EROSION, SHRUBS, GROUND COVER AND STUMPS SHALL BE MAINTAINED, WHERE FEASIBLE. WHERE NOT FEASIBLE APPROPRIATE EROSION CONTROL PRACTICES SHALL BE IMPLEMENTED PURSUANT TO VMC CHAPTER 14.24 AND 14.25.

ADDITIONAL REQUIREMENTS

1. THE PROJECT ARBORIST MAY REQUIRE ADDITIONAL TREE PROTECTION MEASURES WHICH ARE CONSISTENT WITH ACCEPTED URBAN FORESTRY PRACTICES.

EXCAVATION WITHIN TREE ROOT PROTECTION ZONES

1. EXCAVATION IN THE TOP 24" OF THE SOIL IN THE TREE ROOT PROTECTION ZONE AREA SHOULD BEGIN AT THE EXCAVATION LINE THAT IS CLOSEST TO THE TREE.
2. THE EXCAVATION SHOULD BE DONE BY HAND/SHOVEL OR WITH A BACKHOE AND A MAN WITH A SHOVEL, PRUNING SHEARS, AND A PRUNING SAW.
3. IF DONE BY HAND, ALL ROOTS 1" OR LARGER SHOULD BE PRUNED AT THE EXCAVATION LINE.
4. IF DONE WITH A BACKHOE (MOST LIKELY SCENARIO), THEN THE OPERATOR SHALL START THE CUT AT THE EXCAVATION LINE AND CAREFULLY "FEEL" FOR ROOTS/RESISTANCE. WHEN THERE IS RESISTANCE, THE MAN WITH THE SHOVEL HAND DIGS AROUND THE ROOTS AND PRUNES THE ROOTS LARGER THAN 1" DIAMETER.
5. THE BACKHOE IS TO REMAIN OFF OF THE TREE ROOTS TO BE PRESERVED AT ALL TIMES.
6. ALL ROOTS SHALL BE CUT CLEANLY WITH PRUNING SHEARS OR A PRUNING SAW.
7. THE PROJECT ARBORIST MUST BE ON SITE DURING ANY WORK WITHIN THE TREE ROOT PROTECTION ZONE.

PRUNING/TREE REMOVAL NOTES

1. THE CONTRACTOR SHALL PROVIDE AN ADEQUATE CREW OF LABORERS, EQUIPMENT, AND MATERIALS TO SAFELY AND EFFICIENTLY COMPLETE THE ASSIGNED WORK. EACH CREW SHALL INCLUDE AN INDIVIDUAL DESIGNATED AS THE CREW SUPERVISOR. THE CREW SUPERVISOR SHALL BE RESPONSIBLE FOR THE CREW'S ACTIVITIES AND RECEIVE INSTRUCTION FROM THE OWNER OR THE OWNER'S REPRESENTATIVE AND DIRECT THE CREW TO ACCOMPLISH SUCH WORK.
2. WHENEVER A TREE, WHICH IS NOT SCHEDULED TO BE REMOVED, MUST BE TRIMMED OR PRUNED, THE CONTRACTOR SHALL INSURE THAT SUCH TRIMMING AND PRUNING IS CARRIED OUT UNDER THE DIRECT SUPERVISION OF A CERTIFIED ARBORIST. ALL PRUNING AND TRIMMING SHALL BE PERFORMED IN ACCORDANCE WITH THE PROVISIONS OF ANSI A 300 "STANDARD PRACTICES FOR TREE, SHRUB AND OTHER WOODY PLANT MAINTENANCE".
3. ROOT BALLS FROM TREES BEING REMOVED SHALL BE COMPLETELY REMOVED UNLESS THE ROOT REMOVAL CROSSES ONTO ADJACENT PROPERTIES OR WOULD COMPROMISE TREES BEING PRESERVED. IN THOSE CASES, THE STUMPS AND ROOTS SHALL BE GROUND DOWN A MINIMUM OF TWELVE (12) INCHES BELOW NORMAL GROUND LEVEL.
4. THE CONTRACTOR SHALL PERFORM ALL WORK IN ACCORDANCE WITH THE LATEST GOVERNMENTAL SAFETY REGULATIONS. ALL WORK SHALL BE PERFORMED IN STRICT ACCORDANCE WITH ANSI Z133.1 "PRUNING, TRIMMING, REPAIRING, MAINTAINING AND REMOVING TREES AND CUTTING BRUSH–SAFETY REQUIREMENTS" WITH SPECIAL EMPHASIS GIVEN TO THE REQUIREMENT THAT ONLY QUALIFIED LINE–CLEARANCE TREE TRIMMERS BE ASSIGNED TO WORK WHERE A POTENTIAL ELECTRICAL HAZARD EXISTS.
5. THE CONTRACTOR SHALL MAKE ALL THE NECESSARY ARRANGEMENTS WITH ANY UTILITY THAT MUST BE PROTECTED OR RELOCATED IN ORDER TO ACCOMPLISH THE WORK. THE CONTRACTOR SHALL BE SOLELY RESPONSIBLE FOR THE PROTECTION OF THE OPERATING CONDITION OF ALL ACTIVE UTILITIES WITHIN THE AREA OF CONSTRUCTION AND HE SHALL TAKE ALL NECESSARY PRECAUTIONS TO AVOID DAMAGE TO EXISTING UTILITIES.
6. ANY MATERIAL RESULTING FROM THE TRIMMING OR REMOVAL OF ANY TREES SHALL BECOME THE RESPONSIBILITY OF THE CONTRACTOR.
7. HAZARDOUS TREES–REPORTING – ANY PERSON ENGAGED IN TRIMMING OR PRUNING WHO BECOMES AWARE OF A TREE OF DOUBTFUL STRENGTH, THAT COULD BE DANGEROUS TO PERSONS AND PROPERTY, SHALL REPORT SUCH TREE(S) TO THE OWNER OR THE OWNERS REPRESENTATIVE. SUCH TREES SHALL INCLUDE THOSE THAT ARE OVER MATURE, DISEASED, OR SHOWING SIGNS OF DECAY OR OTHER STRUCTURAL WEAKNESS.
8. DAMAGES–ANY DAMAGE CAUSED BY THE CONTRACTOR, INCLUDING, BUT NOT LIMITED TO, BROKEN SIDEWALK, CURB, RUTTED LAWN, BROKEN WATER SHUT–OFFS, WIRE DAMAGE, BUILDING DAMAGE, STREET DAMAGE, ETC., WILL BE REPAIRED OR REPLACED IN A TIMELY MANNER, TO THE OWNER'S SATISFACTION, AND ALL COSTS PAID BY THE CONTRACTOR.
9. ANY BRUSH CLEARING REQUIRED WITHIN THE TREE PROTECTION ZONE SHALL BE ACCOMPLISHED WITH HAND OPERATED EQUIPMENT.
10. TREES TO BE REMOVED SHALL BE FELLED SO AS TO FALL AWAY FROM TREE ROOT PROTECTION ZONES AND TO AVOID PULLING AND BREAKING OF ROOTS TO REMAIN.
11. ALL DOWNED BRUSH AND TREES SHALL BE REMOVED FROM THE TREE PROTECTION ZONE EITHER BY HAND OR WITH EQUIPMENT SITTING OUTSIDE THE TREE ROOT PROTECTION ZONE. EXTRACTION SHALL OCCUR BY LIFTING THE MATERIAL OUT, NOT BY SKIDDING IT ACROSS THE GROUND.
12. IF TEMPORARY HAUL OR ACCESS ROADS MUST PASS OVER THE ROOT AREA OF TREES TO BE RETAINED A ROADBED OF 6 INCHES OF MULCH OR GRAVEL SHALL BE CREATED TO PROTECT THE SOIL. THE ROADBED MATERIAL SHALL BE REPLENISHED AS NECESSARY TO MAINTAIN A 6–INCH DEPTH.
13. PRUNING–TREES SHALL BE PRUNED PRIOR TO THE START OF CONSTRUCTION. TREES SHALL BE CROWN CLEANED TO REMOVE THE DEADWOOD 2 INCHES IN DIAMETER AND OVER. TREES SHALL BE CROWN THINNED BY 10–20%. CROWNS MAY BE RAISED BY REMOVING BOTTOM BRANCHES AS NECESSARY UP TO 14 FEET HIGH TO GIVE CLEARANCE FOR ANY CONSTRUCTION TRAFFIC, ACTIVITIES, ETC. ALL WORK TO BE DONE IN ACCORDANCE WITH ANSI A300 PRUNING STANDARDS. REMOVE ANY LIMBS OF DOUBTFUL STRENGTH THAT COULD BE DANGEROUS TO PERSONS AND PROPERTY.
14. DIRECTIONAL FELLING OF TREES SHALL BE USED TO AVOID DAMAGE TO TREES DESIGNATED FOR RETENTION.
15. CUT BRANCHES AND ROOTS WITH SHARP PRUNING INSTRUMENTS THAT DO NOT CHOP OR TEAR.
16. LARGE HOLES FROM ROOT BALL REMOVAL SHALL BE REPLACED WITH COMPACTED STRUCTURAL FILL TO FINISHED GRADE.
17. STUMPS SHALL BE GROUND AS NECESSARY SO AS NOT TO CAUSE DAMAGE TO THE ROOT ZONES OF ADJACENT TREES TO BE PRESERVED ON THE SUBJECT PARCEL OR ABUTTING PARCELS. STUMPS NEAR PROPERTY LINES SHALL ALSO BE GROUND AS NECESSARY SO AS NOT TO CAUSE DISTURBANCE TO ADJACENT PARCELS.

SHEET INDEX

C030 TREE PRESERVATION AND REMOVAL COVER SHEET
C031 TREE PRESERVATION AND REMOVAL PLAN
C032 TREE PRESERVATION AND REMOVAL TABLE
C033 TREE PRESERVATION AND REMOVAL TABLE
C034 TREE PRESERVATION AND REMOVAL TABLE

AKS ENGINEERING & FORESTRY, LLC
12965 SW HERMAN RD STE 100
TUALATIN, OR 97062
P: 503.563.6151
F: 503.563.6152
aks-eng.com

ENGINEERING · SURVEYING · NATURAL RESOURCES
FORESTRY · PLANNING · LANDSCAPE ARCHITECTURE

KNOLLCREST SUBDIVISION

WEST LINN OREGON

TAX LOTS 100 & 200 CLACKAMAS COUNTY TAX MAP 2 1E 25CC

TREE PRESERVATION AND REMOVAL COVER SHEET

DESIGNED BY:	CLR
DRAWN BY:	NSL/AMF
CHECKED BY:	RSW
SCALE:	AS NOTED

DATE: 07/30/2018

REGISTERED PROFESSIONAL ENGINEER 58549PE OREGON JULY 9, 2002 MONTGOMERY B. HURLEY

RENEWAL DATE: 6/30/19

REVISIONS

JOB NUMBER 5132

SHEET C030

AKS DRAWING FILE: 5132 C030 COVERDWG | LAYOUT: C030

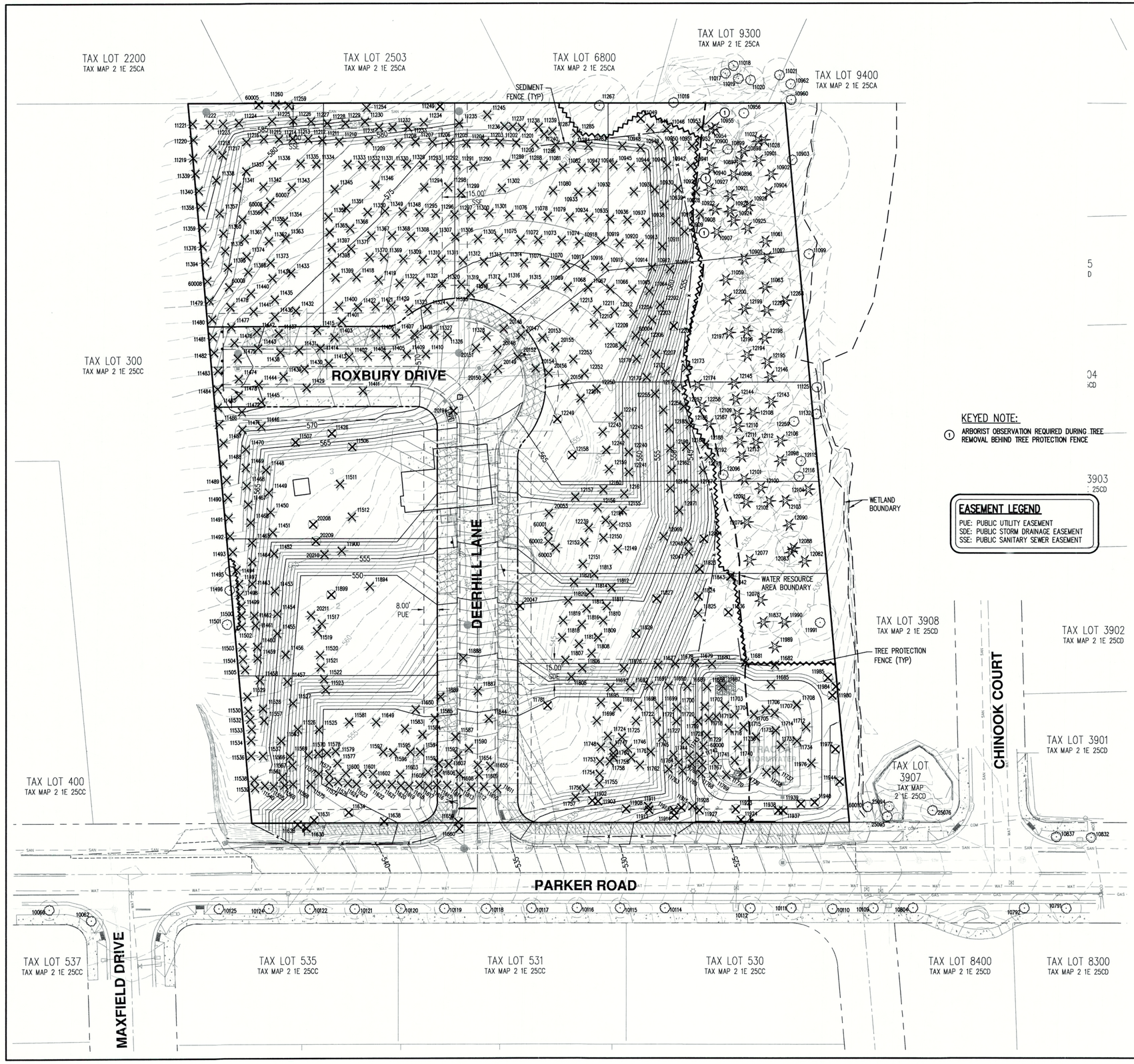

KEYED NOTE:

1. ARBORIST OBSERVATION REQUIRED DURING TREE REMOVAL BEHIND TREE PROTECTION FENCE

EASEMENT LEGEND

PUE: PUBLIC UTILITY EASEMENT
SDE: PUBLIC STORM DRAINAGE EASEMENT
SSE: PUBLIC SANITARY SEWER EASEMENT

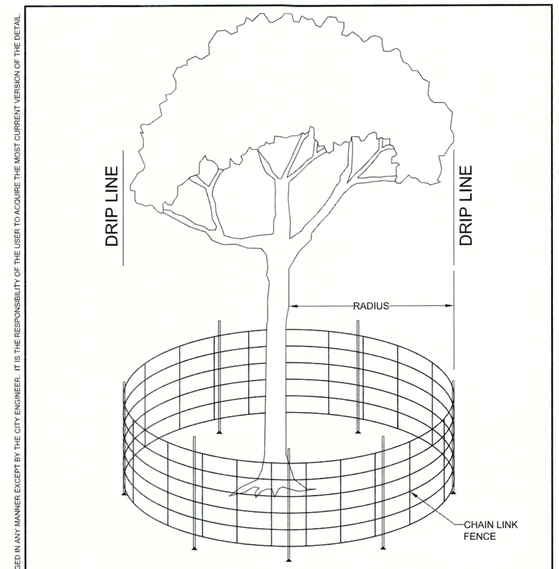

THIS DETAIL DRAWING SHALL NOT BE ALTERED OR CHANGED IN ANY MANNER EXCEPT BY THE CITY ENGINEER. IT IS THE RESPONSIBILITY OF THE USER TO ACQUIRE THE MOST CURRENT VERSION OF THE DETAIL.

NOTE:
1. 6' CHAIN LINK ON 2" POST AT 10' SPACING, DRIVEN 2' INTO GROUND
   RADIUS IS EITHER 1/2' PER CALIPER INCH OR
2. 10' OUTSIDE OF DRIPLINE - SEE PLANS

TREE PROTECTION FENCE

City of West Linn | DATE: 2010 | DRAWING NO. WL-219 | FILE NO.

TREE PROTECTION FENCE NOTE:

TREE PROTECTION FENCE TO BE INSTALLED AS SHOWN ON THE PLANS. TREE PROTECTION FENCE IS SHOWN TO BE INSTALLED WITHIN THE ASSUMED DRIP LINE OF SOME TREES TO BE PRESERVED; HOWEVER, TREE PROTECTION FENCING LOCATIONS HAVE BEEN REVIEWED BY A CERTIFIED ARBORIST, AND THE TREE PROTECTION FENCING AS SHOWN SHOULD PROVIDE ADEQUATE PROTECTION FOR TREES TO BE PRESERVED BASED ON PROPOSED ADJACENT IMPACTS.

LEGEND

- EXISTING GROUND CONTOUR (1 FT)
- EXISTING GROUND CONTOUR (5 FT) — 550 —
- FINISHED GRADE CONTOUR (1 FT)
- FINISHED GRADE CONTOUR (5 FT) — 550 —
- EXISTING CONIFEROUS TREE
- EXISTING DECIDUOUS TREE
- TREE REMOVAL
- TREE PROTECTION FENCE (TREE PROTECTION AREA)
- SEDIMENT FENCE — x — x —
- ASSUMED DRIP LINE (1-FT RADIUS PER 1-IN OF DBH)

N

SCALE: 1"=30 FEET
30 0 12 18 24 30

PRELIMINARY

ISA CERTIFIED ARBORIST
BRUCE R. BALDWIN
CERTIFICATE NUMBER: PN-6666A
EXPIRATION DATE: 12/31/20

AKS ENGINEERING & FORESTRY, LLC
12965 SW HERMAN RD STE 100
TUALATIN, OR 97062
P: 503.563.6151
F: 503.563.6152
aks-eng.com

AKS
ENGINEERING · SURVEYING · NATURAL RESOURCES
FORESTRY · PLANNING · LANDSCAPE ARCHITECTURE

KNOLLCREST SUBDIVISION

WEST LINN OREGON
TAX LOTS 100 & 200
CLACKAMAS COUNTY TAX MAP 2 1E 25CC

TREE PRESERVATION AND REMOVAL PLAN

DESIGNED BY:	CLR
DRAWN BY:	NSL/AMF
CHECKED BY:	RSW
SCALE:	AS NOTED

DATE: 07/30/2018

REGISTERED PROFESSIONAL ENGINEER 58542PE OREGON JULY 9, 2002 MONTGOMERY B. HURLEY
RENEWAL DATE: 6/30/19

REVISIONS

JOB NUMBER 5132

SHEET C031

AKS DRAWING FILE: 5132 TREE.DWG | LAYOUT: C031

Detailed Tree Inventory for Knollcrest Subdivision

AKS Job No. 5132

Tree #	DBH (in.)	Equivalent DBH (in.)[1]	Tree Species Common Name (*Scientific name*)	Comments	Health Rating*	Structure Rating**	Exempt Tree***	Remove / Preserve
10062	7	7	Maple (*Acer sp.*)	**OFFSITE**	1	1	Yes (A)	Preserve
10066	6	6	Maple (*Acer sp.*)	**OFFSITE**	1	1	Yes (A)	Preserve
10109	7	7	Maple (*Acer sp.*)	**OFFSITE**	1	1	Yes (A)	Preserve
10110	6	6	Maple (*Acer sp.*)	**OFFSITE**	1	1	Yes (A)	Preserve
10111	7	7	Maple (*Acer sp.*)	**OFFSITE**	1	1	Yes (A)	Preserve
10112	7	7	Maple (*Acer sp.*)	**OFFSITE**	1	1	Yes (A)	Preserve
10114	3	3	Maple (*Acer sp.*)	**OFFSITE**	1	1	Yes (A)	Preserve
10115	6	6	Maple (*Acer sp.*)	**OFFSITE**	1	1	Yes (A)	Preserve
10116	6	6	Maple (*Acer sp.*)	**OFFSITE**	1	1	Yes (A)	Preserve
10117	6	6	Maple (*Acer sp.*)	**OFFSITE**	1	1	Yes (A)	Preserve
10118	6	6	Maple (*Acer sp.*)	**OFFSITE**	1	1	Yes (A)	Preserve
10119	6	6	Maple (*Acer sp.*)	**OFFSITE**	1	1	Yes (A)	Preserve
10120	6	6	Maple (*Acer sp.*)	**OFFSITE**	1	1	Yes (A)	Preserve
10121	6	6	Maple (*Acer sp.*)	**OFFSITE**	1	1	Yes (A)	Preserve
10122	6	6	Maple (*Acer sp.*)	**OFFSITE**	1	1	Yes (A)	Preserve
10124	6	6	Maple (*Acer sp.*)	**OFFSITE**	1	1	Yes (A)	Preserve
10125	7	7	Maple (*Acer sp.*)	**OFFSITE**	1	1	Yes (A)	Preserve
10791	9	9	Maple (*Acer sp.*)	**OFFSITE**	1	1	Yes (A)	Preserve
10792	9	9	Maple (*Acer sp.*)	**OFFSITE**	1	1	Yes (A)	Preserve
10804	8	8	Maple (*Acer sp.*)	**OFFSITE**	1	1	Yes (A)	Preserve
10832	2	2	Oregon Oak (*Quercus garryana*)	**OFFSITE**	1	1	Yes (A)	Preserve
10837	2	2	Oregon Oak (*Quercus garryana*)	**OFFSITE**	1	1	Yes (A)	Preserve
10896	15	15	Douglas-fir (*Pseudotsuga menziesii*)		1	1	Yes (B)	Preserve
10897	11	11	Douglas-fir (*Pseudotsuga menziesii*)		1	1	Yes (A), (B)	Preserve
10898	7	7	Douglas-fir (*Pseudotsuga menziesii*)		1	1	Yes (A), (B)	Preserve
10899	7, 8	11	Red Alder (*Alnus rubra*)	Codominant	1	1	Yes (A)	Preserve
10900	15	15	Douglas-fir (*Pseudotsuga menziesii*)		1	1	Yes (B)	Preserve
10901	10	10	Engelmann Spruce (*Picea engelmannii*)		1	1	Yes (A), (B)	Preserve
10902	12	12	Douglas-fir (*Pseudotsuga menziesii*)		1	1	Yes (B)	Preserve
10903	34	34	Black Cottonwood (*Populus trichocarpa*)	**OFFSITE**	1	1	No	Preserve
10904	17	17	Douglas-fir (*Pseudotsuga menziesii*)		1	1	Yes (B)	Preserve
10905	12	12	Douglas-fir (*Pseudotsuga menziesii*)		1	1	Yes (B)	Preserve
10907	13	13	Douglas-fir (*Pseudotsuga menziesii*)	Scars	1	2	Yes (B)	Preserve
10908	16	16	Douglas-fir (*Pseudotsuga menziesii*)		1	1	Yes (B)	Remove
10909	17	17	Douglas-fir (*Pseudotsuga menziesii*)		1	1	Yes (B)	Remove
10910	12	12	Douglas-fir (*Pseudotsuga menziesii*)		1	1	Yes (B)	Remove
10911	13	13	Douglas-fir (*Pseudotsuga menziesii*)		1	1	Yes (B)	Remove
10912	12	12	Douglas-fir (*Pseudotsuga menziesii*)		1	1	Yes (B)	Remove
10913	9	9	Ponderosa Pine (*Pinus ponderosa*)	Codominant top	1	2	Yes (A), (B)	Remove
10914	11	11	Douglas-fir (*Pseudotsuga menziesii*)		1	1	Yes (A), (B)	Remove
10915	14	14	Douglas-fir (*Pseudotsuga menziesii*)		1	1	Yes (B)	Remove
10916	14	14	Douglas-fir (*Pseudotsuga menziesii*)		1	1	Yes (B)	Remove
10917	15	15	Douglas-fir (*Pseudotsuga menziesii*)		1	1	Yes (B)	Remove
10918	13	13	Douglas-fir (*Pseudotsuga menziesii*)		1	1	Yes (B)	Remove
10919	16	16	Douglas-fir (*Pseudotsuga menziesii*)	Codominant top	1	2	Yes (B)	Remove
10920	12	12	Douglas-fir (*Pseudotsuga menziesii*)		1	1	Yes (B)	Remove
10921	11	11	Engelmann Spruce (*Picea engelmannii*)		1	1	Yes (A), (B)	Preserve
10922	8	8	Engelmann Spruce (*Picea engelmannii*)		1	1	Yes (A), (B)	Preserve
10923	12	12	Douglas-fir (*Pseudotsuga menziesii*)		1	1	Yes (B)	Preserve
10924	6	6	Engelmann Spruce (*Picea engelmannii*)		1	1	Yes (A), (B)	Preserve
10925	16	16	Douglas-fir (*Pseudotsuga menziesii*)	Large scar with sap flow	1	2	Yes (B)	Preserve
10926	9	9	Engelmann Spruce (*Picea engelmannii*)		1	1	Yes (A), (B)	Preserve
10927	10	10	Engelmann Spruce (*Picea engelmannii*)		1	1	Yes (A), (B)	Preserve
10928	8	8	Engelmann Spruce (*Picea engelmannii*)		1	1	Yes (A), (B)	Remove
10929	17	17	Douglas-fir (*Pseudotsuga menziesii*)		1	1	Yes (B)	Remove
10930	15	15	Douglas-fir (*Pseudotsuga menziesii*)		1	1	Yes (B)	Remove
10931	17	17	Douglas-fir (*Pseudotsuga menziesii*)		1	1	Yes (B)	Remove
10932	15	15	Douglas-fir (*Pseudotsuga menziesii*)		1	1	Yes (B)	Remove
10933	17	17	Douglas-fir (*Pseudotsuga menziesii*)		1	1	Yes (B)	Remove
10934	14	14	Douglas-fir (*Pseudotsuga menziesii*)		1	1	Yes (B)	Remove
10935	14	14	Douglas-fir (*Pseudotsuga menziesii*)		1	1	Yes (B)	Remove
10936	14	14	Douglas-fir (*Pseudotsuga menziesii*)		1	1	Yes (B)	Remove
10937	15	15	Douglas-fir (*Pseudotsuga menziesii*)		1	1	Yes (B)	Remove
10938	14	14	Douglas-fir (*Pseudotsuga menziesii*)		1	1	Yes (B)	Remove
10939	15	15	Douglas-fir (*Pseudotsuga menziesii*)		1	1	Yes (B)	Remove
10940	17	17	Douglas-fir (*Pseudotsuga menziesii*)		1	1	Yes (B)	Preserve
10941	12	12	Douglas-fir (*Pseudotsuga menziesii*)		1	1	Yes (B)	Remove
10942	15	15	Douglas-fir (*Pseudotsuga menziesii*)		1	1	Yes (B)	Remove
10943	15	15	Douglas-fir (*Pseudotsuga menziesii*)		1	1	Yes (B)	Remove
10944	13	13	Douglas-fir (*Pseudotsuga menziesii*)		1	1	Yes (B)	Remove
10945	15	15	Douglas-fir (*Pseudotsuga menziesii*)		1	1	Yes (B)	Remove
10946	14	14	Douglas-fir (*Pseudotsuga menziesii*)		1	1	Yes (B)	Remove
10947	13	13	Douglas-fir (*Pseudotsuga menziesii*)		1	1	Yes (B)	Remove
10948	16	16	Douglas-fir (*Pseudotsuga menziesii*)		1	1	Yes (B)	Remove
10949	13	13	Douglas-fir (*Pseudotsuga menziesii*)		1	1	Yes (B)	Remove
10950	14	14	Douglas-fir (*Pseudotsuga menziesii*)		1	1	Yes (B)	Remove
10951	12	12	Douglas-fir (*Pseudotsuga menziesii*)		1	1	Yes (B)	Remove
10952	12	12	Douglas-fir (*Pseudotsuga menziesii*)		1	1	Yes (B)	Remove
10953	17	17	Douglas-fir (*Pseudotsuga menziesii*)		1	1	Yes (B)	Remove
10954	17	17	Douglas-fir (*Pseudotsuga menziesii*)		1	1	Yes (B)	Preserve
10955	14	14	Douglas-fir (*Pseudotsuga menziesii*)		1	1	Yes (B)	Preserve
10956	6, 7	9	English Hawthorn (*Crataegus monogyna*)	Codominant; Scars; Cracks; Cavity; Decay	2	3	Yes (A)	Preserve
10960	6	6	Red Alder (*Alnus rubra*)	**OFFSITE**	1	1	Yes (A)	Preserve
10962	7	7	Red Alder (*Alnus rubra*)	**OFFSITE**	1	1	Yes (A)	Preserve
11016	21, 22	30	Oregon Oak (*Quercus garryana*)	**OFFSITE**; Codominant	1	1	No	Preserve
11017	6	6	Red Alder (*Alnus rubra*)	**OFFSITE**	1	1	Yes (A)	Preserve
11018	7	7	Red Alder (*Alnus rubra*)	**OFFSITE**	1	1	Yes (A)	Preserve
11019	7	7	Red Alder (*Alnus rubra*)	**OFFSITE**	1	1	Yes (A)	Preserve
11020	8	8	Red Alder (*Alnus rubra*)	**OFFSITE**	1	1	Yes (A)	Preserve
11021	10	10	Red Alder (*Alnus rubra*)	**OFFSITE**	1	1	Yes (A)	Preserve
11027	11	11	Black Cottonwood (*Populus trichocarpa*)		1	1	Yes (A)	Preserve
11028	6	6	Engelmann Spruce (*Picea engelmannii*)	Crooked	1	2	Yes (A), (B)	Preserve
11045	16	16	Douglas-fir (*Pseudotsuga menziesii*)		1	1	Yes (B)	Remove
11046	7	7	Douglas-fir (*Pseudotsuga menziesii*)		1	1	Yes (A), (B)	Remove
11049	10	10	Cherry (*Prunus sp.*)		1	1	Yes (A)	Remove
11055	12	12	Douglas-fir (*Pseudotsuga menziesii*)	Crooked	1	2	Yes (B)	Remove
11059	13	13	Ponderosa Pine (*Pinus ponderosa*)		1	1	Yes (B)	Preserve
11061	11	11	Engelmann Spruce (*Picea engelmannii*)		1	1	Yes (A), (B)	Preserve
11062	15	15	Engelmann Spruce (*Picea engelmannii*)		1	1	Yes (B)	Preserve
11063	15	15	Engelmann Spruce (*Picea engelmannii*)		1	1	Yes (B)	Preserve

Detailed Tree Inventory for Knollcrest Subdivision

AKS Job No. 5132

Tree #	DBH (in.)	Equivalent DBH (in.)[1]	Tree Species Common Name (*Scientific name*)	Comments	Health Rating*	Structure Rating**	Exempt Tree***	Remove / Preserve
11064	14	14	Douglas-fir (*Pseudotsuga menziesii*)		1	1	Yes (B)	Remove
11065	13	13	Douglas-fir (*Pseudotsuga menziesii*)		1	1	Yes (B)	Remove
11066	13	13	Douglas-fir (*Pseudotsuga menziesii*)	Codominant top	1	2	Yes (B)	Remove
11067	13	13	Douglas-fir (*Pseudotsuga menziesii*)		1	1	Yes (B)	Remove
11068	13	13	Douglas-fir (*Pseudotsuga menziesii*)		1	1	Yes (B)	Remove
11069	14	14	Douglas-fir (*Pseudotsuga menziesii*)		1	1	Yes (B)	Remove
11070	12	12	Douglas-fir (*Pseudotsuga menziesii*)		1	1	Yes (B)	Remove
11071	9	9	Douglas-fir (*Pseudotsuga menziesii*)		1	1	Yes (A), (B)	Remove
11072	13	13	Douglas-fir (*Pseudotsuga menziesii*)		1	1	Yes (B)	Remove
11073	13	13	Douglas-fir (*Pseudotsuga menziesii*)		1	1	Yes (B)	Remove
11074	10	10	Douglas-fir (*Pseudotsuga menziesii*)		1	1	Yes (A), (B)	Remove
11076	13	13	Douglas-fir (*Pseudotsuga menziesii*)		1	1	Yes (B)	Remove
11078	13	13	Douglas-fir (*Pseudotsuga menziesii*)		1	1	Yes (B)	Remove
11079	14	14	Douglas-fir (*Pseudotsuga menziesii*)		1	1	Yes (B)	Remove
11080	18	18	Douglas-fir (*Pseudotsuga menziesii*)		1	1	Yes (B)	Remove
11081	11	11	Douglas-fir (*Pseudotsuga menziesii*)		1	1	Yes (A), (B)	Remove
11082	16	16	Douglas-fir (*Pseudotsuga menziesii*)		1	1	Yes (B)	Remove
11099	8	8	Black Cottonwood (*Populus trichocarpa*)	**OFFSITE**	1	1	Yes (A)	Preserve
11125	9	9	Red Alder (*Alnus rubra*)	**OFFSITE**	1	1	Yes (A)	Preserve
11132	7	7	Red Alder (*Alnus rubra*)	**OFFSITE**	1	1	Yes (A)	Preserve
11200	11	11	Douglas-fir (*Pseudotsuga menziesii*)		1	1	Yes (A), (B)	Remove
11201	10	10	Douglas-fir (*Pseudotsuga menziesii*)	Crooked	1	2	Yes (A), (B)	Remove
11202	8	8	Douglas-fir (*Pseudotsuga menziesii*)		1	1	Yes (A), (B)	Remove
11203	14	14	Douglas-fir (*Pseudotsuga menziesii*)		1	1	Yes (B)	Remove
11204	12	12	Douglas-fir (*Pseudotsuga menziesii*)		1	1	Yes (B)	Remove
11205	12	12	Douglas-fir (*Pseudotsuga menziesii*)		1	1	Yes (B)	Remove
11206	11	11	Douglas-fir (*Pseudotsuga menziesii*)		1	1	Yes (A), (B)	Remove
11207	13	13	Douglas-fir (*Pseudotsuga menziesii*)		1	1	Yes (B)	Remove
11208	10	10	Douglas-fir (*Pseudotsuga menziesii*)		1	1	Yes (A), (B)	Remove
11209	14	14	Douglas-fir (*Pseudotsuga menziesii*)		1	1	Yes (B)	Remove
11210	12	12	Douglas-fir (*Pseudotsuga menziesii*)		1	1	Yes (B)	Remove
11211	13	13	Douglas-fir (*Pseudotsuga menziesii*)		1	1	Yes (B)	Remove
11212	13	13	Douglas-fir (*Pseudotsuga menziesii*)		1	1	Yes (B)	Remove
11213	10, 13	16	Douglas-fir (*Pseudotsuga menziesii*)	Codominant	1	1	Yes (B)	Remove
11214	11	11	Douglas-fir (*Pseudotsuga menziesii*)		1	1	Yes (A), (B)	Remove
11215	12	12	Douglas-fir (*Pseudotsuga menziesii*)		1	1	Yes (B)	Remove
11216	14	14	Douglas-fir (*Pseudotsuga menziesii*)		1	1	Yes (B)	Remove
11217	14	14	Douglas-fir (*Pseudotsuga menziesii*)		1	1	Yes (B)	Remove
11218	15	15	Douglas-fir (*Pseudotsuga menziesii*)		1	1	Yes (B)	Remove
11219	14	14	Douglas-fir (*Pseudotsuga menziesii*)		1	1	Yes (B)	Remove
11220	19	19	Douglas-fir (*Pseudotsuga menziesii*)		1	1	Yes (B)	Remove
11221	20	20	Douglas-fir (*Pseudotsuga menziesii*)		1	1	Yes (B)	Remove
11222	13	13	Douglas-fir (*Pseudotsuga menziesii*)		1	1	Yes (B)	Remove
11223	14	14	Douglas-fir (*Pseudotsuga menziesii*)		1	1	Yes (B)	Remove
11224	14	14	Douglas-fir (*Pseudotsuga menziesii*)		1	1	Yes (B)	Remove
11225	12	12	Douglas-fir (*Pseudotsuga menziesii*)		1	1	Yes (B)	Remove
11226	12	12	Douglas-fir (*Pseudotsuga menziesii*)		1	1	Yes (B)	Remove
11227	13	13	Douglas-fir (*Pseudotsuga menziesii*)		1	1	Yes (B)	Remove
11228	15	15	Douglas-fir (*Pseudotsuga menziesii*)		1	1	Yes (B)	Remove
11229	15	15	Douglas-fir (*Pseudotsuga menziesii*)		1	1	Yes (B)	Remove
11230	12	12	Douglas-fir (*Pseudotsuga menziesii*)		1	1	Yes (B)	Remove
11231	13	13	Douglas-fir (*Pseudotsuga menziesii*)		1	1	Yes (B)	Remove
11232	11	11	Douglas-fir (*Pseudotsuga menziesii*)		1	1	Yes (A), (B)	Remove
11233	12	12	Douglas-fir (*Pseudotsuga menziesii*)		1	1	Yes (B)	Remove
11234	13	13	Douglas-fir (*Pseudotsuga menziesii*)		1	1	Yes (B)	Remove
11235	14	14	Douglas-fir (*Pseudotsuga menziesii*)		1	1	Yes (B)	Remove
11236	12	12	Douglas-fir (*Pseudotsuga menziesii*)	Crooked	1	2	Yes (B)	Remove
11237	12	12	Douglas-fir (*Pseudotsuga menziesii*)		1	1	Yes (B)	Remove
11238	13	13	Douglas-fir (*Pseudotsuga menziesii*)		1	1	Yes (B)	Remove
11239	10	10	Douglas-fir (*Pseudotsuga menziesii*)		1	1	Yes (A), (B)	Remove
11240	13	13	Douglas-fir (*Pseudotsuga menziesii*)		1	1	Yes (B)	Remove
11245	21	21	Douglas-fir (*Pseudotsuga menziesii*)		1	1	Yes (B)	Remove
11249	8, 9	12	English Hawthorn (*Crataegus monogyna*)	Codominant; Broken branches; Cracks; Dead branches	2	3	No	Remove
11254	18	18	Douglas-fir (*Pseudotsuga menziesii*)		1	1	Yes (B)	Remove
11259	15	15	Douglas-fir (*Pseudotsuga menziesii*)		1	1	Yes (B)	Remove
11260	17	17	Douglas-fir (*Pseudotsuga menziesii*)		1	1	Yes (B)	Remove
11267	17, 18	25	Oregon Oak (*Quercus garryana*)	Codominant	1	1	No	Preserve
11283	8, 8	11	Douglas-fir (*Pseudotsuga menziesii*)	Codominant	1	1	Yes (A), (B)	Remove
11284	11	11	Douglas-fir (*Pseudotsuga menziesii*)		1	1	Yes (A), (B)	Remove
11285	17	17	Douglas-fir (*Pseudotsuga menziesii*)		1	1	Yes (B)	Remove
11286	15	15	Douglas-fir (*Pseudotsuga menziesii*)		1	1	Yes (B)	Remove
11287	6	6	Douglas-fir (*Pseudotsuga menziesii*)		1	1	Yes (A), (B)	Remove
11288	16	16	Douglas-fir (*Pseudotsuga menziesii*)		1	1	Yes (B)	Remove
11289	13	13	Douglas-fir (*Pseudotsuga menziesii*)		1	1	Yes (B)	Remove
11290	12, 13	18	Douglas-fir (*Pseudotsuga menziesii*)	Codominant	1	1	Yes (B)	Remove
11291	12	12	Douglas-fir (*Pseudotsuga menziesii*)		1	1	Yes (B)	Remove
11292	10	10	Douglas-fir (*Pseudotsuga menziesii*)		1	1	Yes (A), (B)	Remove
11293	14	14	Douglas-fir (*Pseudotsuga menziesii*)		1	1	Yes (B)	Remove
11294	16	16	Douglas-fir (*Pseudotsuga menziesii*)		1	1	Yes (B)	Remove
11295	13	13	Douglas-fir (*Pseudotsuga menziesii*)		1	1	Yes (B)	Remove
11296	13	13	Douglas-fir (*Pseudotsuga menziesii*)		1	1	Yes (B)	Remove
11297	7, 10	12	Douglas-fir (*Pseudotsuga menziesii*)	Codominant	1	2	Yes (B)	Remove
11298	16	16	Douglas-fir (*Pseudotsuga menziesii*)		1	1	Yes (B)	Remove
11299	13	13	Douglas-fir (*Pseudotsuga menziesii*)		1	1	Yes (B)	Remove
11300	12	12	Douglas-fir (*Pseudotsuga menziesii*)		1	1	Yes (B)	Remove
11301	15	15	Douglas-fir (*Pseudotsuga menziesii*)		1	1	Yes (B)	Remove
11302	17	17	Douglas-fir (*Pseudotsuga menziesii*)		1	1	Yes (B)	Remove
11305	12	12	Douglas-fir (*Pseudotsuga menziesii*)		1	1	Yes (B)	Remove
11306	15	15	Douglas-fir (*Pseudotsuga menziesii*)		1	1	Yes (B)	Remove
11307	13	13	Douglas-fir (*Pseudotsuga menziesii*)		1	1	Yes (B)	Remove
11308	12	12	Douglas-fir (*Pseudotsuga menziesii*)		1	1	Yes (B)	Remove
11309	13	13	Douglas-fir (*Pseudotsuga menziesii*)		1	1	Yes (B)	Remove
11310	11	11	Douglas-fir (*Pseudotsuga menziesii*)		1	1	Yes (A), (B)	Remove
11311	12	12	Douglas-fir (*Pseudotsuga menziesii*)		1	1	Yes (B)	Remove
11312	11	11	Douglas-fir (*Pseudotsuga menziesii*)		1	1	Yes (A), (B)	Remove
11313	13	13	Douglas-fir (*Pseudotsuga menziesii*)		1	1	Yes (B)	Remove
11314	6, 7, 12	15	Douglas-fir (*Pseudotsuga menziesii*)	Codominant	1	1	Yes (B)	Remove
11315	14	14	Douglas-fir (*Pseudotsuga menziesii*)		1	1	Yes (B)	Remove
11316	14	14	Douglas-fir (*Pseudotsuga menziesii*)		1	1	Yes (B)	Remove
11317	12	12	Douglas-fir (*Pseudotsuga menziesii*)		1	1	Yes (B)	Remove

Detailed Tree Inventory for Knollcrest Subdivision

AKS Job No. 5132

Tree #	DBH (in.)	Equivalent DBH (in.)[1]	Tree Species Common Name (*Scientific name*)	Comments	Health Rating*	Structure Rating**	Exempt Tree***	Remove / Preserve
11318	12	12	Douglas-fir (*Pseudotsuga menziesii*)		1	1	Yes (B)	Remove
11319	9	9	Douglas-fir (*Pseudotsuga menziesii*)		1	1	Yes (A), (B)	Remove
11320	13	13	Douglas-fir (*Pseudotsuga menziesii*)		1	1	Yes (B)	Remove
11321	12	12	Douglas-fir (*Pseudotsuga menziesii*)		1	1	Yes (B)	Remove
11322	13	13	Douglas-fir (*Pseudotsuga menziesii*)		1	1	Yes (B)	Remove
11323	13	13	Douglas-fir (*Pseudotsuga menziesii*)		1	1	Yes (B)	Remove
11324	12	12	Douglas-fir (*Pseudotsuga menziesii*)		1	1	Yes (B)	Remove
11325	14	14	Douglas-fir (*Pseudotsuga menziesii*)		1	1	Yes (B)	Remove
11326	13	13	Ponderosa Pine (*Pinus ponderosa*)		1	1	Yes (B)	Remove
11327	8	8	Douglas-fir (*Pseudotsuga menziesii*)		1	1	Yes (A), (B)	Remove
11328	11	11	Douglas-fir (*Pseudotsuga menziesii*)		1	1	Yes (A), (B)	Remove
11329	15	15	Douglas-fir (*Pseudotsuga menziesii*)		1	1	Yes (B)	Remove
11330	14	14	Douglas-fir (*Pseudotsuga menziesii*)		1	1	Yes (B)	Remove
11331	12	12	Douglas-fir (*Pseudotsuga menziesii*)		1	1	Yes (B)	Remove
11332	13	13	Douglas-fir (*Pseudotsuga menziesii*)		1	1	Yes (B)	Remove
11333	15	15	Douglas-fir (*Pseudotsuga menziesii*)		1	1	Yes (B)	Remove
11334	15	15	Douglas-fir (*Pseudotsuga menziesii*)		1	1	Yes (B)	Remove
11335	15	15	Douglas-fir (*Pseudotsuga menziesii*)		1	1	Yes (B)	Remove
11336	15	15	Douglas-fir (*Pseudotsuga menziesii*)		1	1	Yes (B)	Remove
11337	8, 9	12	Douglas-fir (*Pseudotsuga menziesii*)	Codominant	1	1	Yes (B)	Remove
11338	16	16	Douglas-fir (*Pseudotsuga menziesii*)		1	1	Yes (B)	Remove
11339	16	16	Douglas-fir (*Pseudotsuga menziesii*)		1	1	Yes (B)	Remove
11340	15	15	Douglas-fir (*Pseudotsuga menziesii*)		1	1	Yes (B)	Remove
11341	12	12	Douglas-fir (*Pseudotsuga menziesii*)		1	1	Yes (B)	Remove
11342	13	13	Douglas-fir (*Pseudotsuga menziesii*)		1	1	Yes (B)	Remove
11343	16	16	Douglas-fir (*Pseudotsuga menziesii*)		1	1	Yes (B)	Remove
11345	17	17	Douglas-fir (*Pseudotsuga menziesii*)		1	1	Yes (B)	Remove
11346	15	15	Douglas-fir (*Pseudotsuga menziesii*)		1	1	Yes (B)	Remove
11348	14	14	Douglas-fir (*Pseudotsuga menziesii*)		1	1	Yes (B)	Remove
11349	12	12	Douglas-fir (*Pseudotsuga menziesii*)		1	1	Yes (B)	Remove
11350	14	14	Douglas-fir (*Pseudotsuga menziesii*)		1	1	Yes (B)	Remove
11351	12	12	Douglas-fir (*Pseudotsuga menziesii*)		1	1	Yes (B)	Remove
11352	10	10	Douglas-fir (*Pseudotsuga menziesii*)		1	1	Yes (A), (B)	Remove
11354	12	12	Douglas-fir (*Pseudotsuga menziesii*)		1	1	Yes (B)	Remove
11355	14	14	Douglas-fir (*Pseudotsuga menziesii*)		1	1	Yes (B)	Remove
11356	16	16	Douglas-fir (*Pseudotsuga menziesii*)		1	1	Yes (B)	Remove
11357	17	17	Douglas-fir (*Pseudotsuga menziesii*)		1	1	Yes (B)	Remove
11358	16	16	Douglas-fir (*Pseudotsuga menziesii*)		1	1	Yes (B)	Remove
11359	19	19	Douglas-fir (*Pseudotsuga menziesii*)		1	1	Yes (B)	Remove
11360	10	10	Douglas-fir (*Pseudotsuga menziesii*)		1	1	Yes (A), (B)	Remove
11361	11	11	Douglas-fir (*Pseudotsuga menziesii*)		1	1	Yes (A), (B)	Remove
11362	12, 13	18	Douglas-fir (*Pseudotsuga menziesii*)	Codominant with included bark	1	2	Yes (B)	Remove
11363	10	10	Douglas-fir (*Pseudotsuga menziesii*)		1	1	Yes (A), (B)	Remove
11365	14	14	Douglas-fir (*Pseudotsuga menziesii*)		1	1	Yes (B)	Remove
11366	12	12	Douglas-fir (*Pseudotsuga menziesii*)		1	1	Yes (B)	Remove
11367	15	15	Douglas-fir (*Pseudotsuga menziesii*)		1	1	Yes (B)	Remove
11368	12	12	Douglas-fir (*Pseudotsuga menziesii*)		1	1	Yes (B)	Remove
11369	12	12	Douglas-fir (*Pseudotsuga menziesii*)		1	1	Yes (B)	Remove
11370	8	8	Douglas-fir (*Pseudotsuga menziesii*)		1	1	Yes (A), (B)	Remove
11371	6, 6	8	Douglas-fir (*Pseudotsuga menziesii*)	Codominant	1	1	Yes (A), (B)	Remove
11373	17	17	Douglas-fir (*Pseudotsuga menziesii*)		1	1	Yes (B)	Remove
11374	11	11	Douglas-fir (*Pseudotsuga menziesii*)		1	1	Yes (A), (B)	Remove
11375	13	13	Douglas-fir (*Pseudotsuga menziesii*)		1	1	Yes (B)	Remove
11376	18	18	Douglas-fir (*Pseudotsuga menziesii*)		1	1	Yes (B)	Remove
11394	21	21	Douglas-fir (*Pseudotsuga menziesii*)		1	1	Yes (B)	Remove
11395	13	13	Douglas-fir (*Pseudotsuga menziesii*)		1	1	Yes (B)	Remove
11396	10	10	Douglas-fir (*Pseudotsuga menziesii*)		1	1	Yes (A), (B)	Remove
11397	14	14	Douglas-fir (*Pseudotsuga menziesii*)		1	1	Yes (B)	Remove
11398	12	12	Douglas-fir (*Pseudotsuga menziesii*)		1	1	Yes (B)	Remove
11399	14	14	Douglas-fir (*Pseudotsuga menziesii*)		1	1	Yes (B)	Remove
11400	12, 13	18	Douglas-fir (*Pseudotsuga menziesii*)	Codominant; Crooked	1	2	Yes (B)	Remove
11401	17	17	Douglas-fir (*Pseudotsuga menziesii*)		1	1	Yes (B)	Remove
11402	10	10	Ponderosa Pine (*Pinus ponderosa*)		1	1	Yes (A), (B)	Remove
11403	10	10	Douglas-fir (*Pseudotsuga menziesii*)		1	1	Yes (A), (B)	Remove
11404	7	7	Douglas-fir (*Pseudotsuga menziesii*)		1	1	Yes (A), (B)	Remove
11405	13	13	Douglas-fir (*Pseudotsuga menziesii*)		1	1	Yes (B)	Remove
11406	11	11	Douglas-fir (*Pseudotsuga menziesii*)		1	1	Yes (A), (B)	Remove
11407	13	13	Douglas-fir (*Pseudotsuga menziesii*)		1	1	Yes (B)	Remove
11408	10	10	Douglas-fir (*Pseudotsuga menziesii*)		1	1	Yes (A), (B)	Remove
11409	14	14	Douglas-fir (*Pseudotsuga menziesii*)		1	1	Yes (B)	Remove
11410	15	15	Douglas-fir (*Pseudotsuga menziesii*)		1	1	Yes (B)	Remove
11411	24	24	Douglas-fir (*Pseudotsuga menziesii*)		1	1	Yes (B)	Remove
11413	10	10	Ponderosa Pine (*Pinus ponderosa*)		1	1	Yes (A), (B)	Remove
11414	9	9	Ponderosa Pine (*Pinus ponderosa*)		1	1	Yes (A), (B)	Remove
11415	9	9	Ponderosa Pine (*Pinus ponderosa*)		1	1	Yes (A), (B)	Remove
11418	10	10	Douglas-fir (*Pseudotsuga menziesii*)		1	1	Yes (A), (B)	Remove
11419	11	11	Ponderosa Pine (*Pinus ponderosa*)		1	1	Yes (A), (B)	Remove
11420	14	14	Douglas-fir (*Pseudotsuga menziesii*)		1	1	Yes (B)	Remove
11421	11	11	Douglas-fir (*Pseudotsuga menziesii*)		1	1	Yes (A), (B)	Remove
11422	7	7	Douglas-fir (*Pseudotsuga menziesii*)		1	1	Yes (A), (B)	Remove
11426	12	12	Bigleaf Maple (*Acer macrophyllum*)		1	1	No	Remove
11429	8	8	Ponderosa Pine (*Pinus ponderosa*)		1	1	Yes (A), (B)	Remove
11430	13	13	Ponderosa Pine (*Pinus ponderosa*)	Codominant top	1	2	Yes (B)	Remove
11431	14	14	Douglas-fir (*Pseudotsuga menziesii*)		1	1	Yes (B)	Remove
11432	17	17	Douglas-fir (*Pseudotsuga menziesii*)		1	1	Yes (B)	Remove
11433	8	8	Ponderosa Pine (*Pinus ponderosa*)		1	1	Yes (A), (B)	Remove
11434	16	16	Ponderosa Pine (*Pinus ponderosa*)		1	1	Yes (B)	Remove
11435	16	16	Douglas-fir (*Pseudotsuga menziesii*)		1	1	Yes (B)	Remove
11436	13	13	Douglas-fir (*Pseudotsuga menziesii*)		1	1	Yes (B)	Remove
11437	15	15	Douglas-fir (*Pseudotsuga menziesii*)		1	1	Yes (B)	Remove
11438	15	15	Douglas-fir (*Pseudotsuga menziesii*)		1	1	Yes (B)	Remove
11439	13	13	Douglas-fir (*Pseudotsuga menziesii*)		1	1	Yes (B)	Remove
11440	13	13	Douglas-fir (*Pseudotsuga menziesii*)		1	1	Yes (B)	Remove
11441	15	15	Douglas-fir (*Pseudotsuga menziesii*)		1	1	Yes (B)	Remove
11442	15	15	Douglas-fir (*Pseudotsuga menziesii*)		1	1	Yes (B)	Remove
11443	15	15	Douglas-fir (*Pseudotsuga menziesii*)		1	1	Yes (B)	Remove
11444	14	14	Douglas-fir (*Pseudotsuga menziesii*)		1	1	Yes (B)	Remove
11445	9, 13	16	Douglas-fir (*Pseudotsuga menziesii*)	Codominant	1	1	Yes (B)	Remove
11446	15	15	Douglas-fir (*Pseudotsuga menziesii*)		1	1	Yes (B)	Remove
11448	8	8	Douglas-fir (*Pseudotsuga menziesii*)		1	1	Yes (A), (B)	Remove

AKS ENGINEERING & FORESTRY, LLC
12965 SW HERMAN RD STE 100
TUALATIN, OR 97062
P: 503.563.6151
F: 503.563.6152
aks-eng.com

ENGINEERING · SURVEYING · NATURAL RESOURCES
FORESTRY · PLANNING · LANDSCAPE ARCHITECTURE

KNOLLCREST SUBDIVISION

WEST LINN OREGON

TAX LOTS 100 & 200 CLACKAMAS COUNTY TAX MAP 2 1E 25CC

TREE PRESERVATION AND REMOVAL TABLE

DESIGNED BY: CLR
DRAWN BY: NSL/AMF
CHECKED BY: RSW
SCALE: AS NOTED
DATE: 07/30/2018

REGISTERED PROFESSIONAL ENGINEER 58542PE OREGON JULY 9, 2002 MONTGOMERY B. HURLEY
RENEWAL DATE: 6/30/19

REVISIONS

JOB NUMBER
5132

SHEET
C032

AKS DRAWING FILE: 5132 TREE TABLE.DWG | LAYOUT: C032

Detailed Tree Inventory for Knollcrest Subdivision

AKS Job No. 5132

Tree #	DBH (in.)	Equivalent DBH (in.)[1]	Tree Species Common Name (*Scientific name*)	Comments	Health Rating*	Structure Rating**	Exempt Tree***	Remove / Preserve
11449	16	16	Douglas-fir (*Pseudotsuga menziesii*)		1	1	Yes (B)	Remove
11450	14	14	Douglas-fir (*Pseudotsuga menziesii*)		1	1	Yes (B)	Remove
11451	14, 16	21	Douglas-fir (*Pseudotsuga menziesii*)	Codominant	1	1	Yes (B)	Remove
11452	6	6	Douglas-fir (*Pseudotsuga menziesii*)		1	1	Yes (A), (B)	Remove
11453	16	16	Douglas-fir (*Pseudotsuga menziesii*)		1	1	Yes (B)	Remove
11454	21	21	Douglas-fir (*Pseudotsuga menziesii*)		1	1	Yes (B)	Remove
11455	7	7	Western Redcedar (*Thuja plicata*)		1	1	Yes (A), (B)	Remove
11456	19	19	Douglas-fir (*Pseudotsuga menziesii*)		1	1	Yes (B)	Remove
11457	17	17	Douglas-fir (*Pseudotsuga menziesii*)		1	1	Yes (B)	Remove
11458	15	15	Douglas-fir (*Pseudotsuga menziesii*)		1	1	Yes (B)	Remove
11459	16	16	Douglas-fir (*Pseudotsuga menziesii*)		1	1	Yes (B)	Remove
11460	7	7	Western Redcedar (*Thuja plicata*)		1	1	Yes (A), (B)	Remove
11461	15	15	Douglas-fir (*Pseudotsuga menziesii*)		1	1	Yes (B)	Remove
11462	14	14	Douglas-fir (*Pseudotsuga menziesii*)		1	1	Yes (B)	Remove
11463	14	14	Douglas-fir (*Pseudotsuga menziesii*)		1	1	Yes (B)	Remove
11464	11	11	Douglas-fir (*Pseudotsuga menziesii*)		1	1	Yes (A), (B)	Remove
11465	14	14	Douglas-fir (*Pseudotsuga menziesii*)		1	1	Yes (B)	Remove
11466	13	13	Douglas-fir (*Pseudotsuga menziesii*)		1	1	Yes (B)	Remove
11467	11	11	Douglas-fir (*Pseudotsuga menziesii*)		1	1	Yes (A), (B)	Remove
11468	14	14	Douglas-fir (*Pseudotsuga menziesii*)		1	1	Yes (B)	Remove
11469	16	16	Douglas-fir (*Pseudotsuga menziesii*)		1	1	Yes (B)	Remove
11470	16	16	Douglas-fir (*Pseudotsuga menziesii*)		1	1	Yes (B)	Remove
11471	13	13	Douglas-fir (*Pseudotsuga menziesii*)		1	1	Yes (B)	Remove
11472	10, 10	14	Douglas-fir (*Pseudotsuga menziesii*)	Codominant	1	1	Yes (B)	Remove
11473	7	7	Douglas-fir (*Pseudotsuga menziesii*)		1	1	Yes (A), (B)	Remove
11474	14	14	Douglas-fir (*Pseudotsuga menziesii*)		1	1	Yes (B)	Remove
11475	15	15	Douglas-fir (*Pseudotsuga menziesii*)		1	1	Yes (B)	Remove
11476	10	10	Douglas-fir (*Pseudotsuga menziesii*)		1	1	Yes (A), (B)	Remove
11477	12	12	Douglas-fir (*Pseudotsuga menziesii*)		1	1	Yes (B)	Remove
11478	14	14	Douglas-fir (*Pseudotsuga menziesii*)		1	1	Yes (B)	Remove
11479	21	21	Douglas-fir (*Pseudotsuga menziesii*)		1	1	Yes (B)	Remove
11480	16	16	Douglas-fir (*Pseudotsuga menziesii*)		1	1	Yes (B)	Remove
11481	18	18	Douglas-fir (*Pseudotsuga menziesii*)		1	1	Yes (B)	Remove
11482	18	18	Douglas-fir (*Pseudotsuga menziesii*)		1	1	Yes (B)	Remove
11483	20	20	Douglas-fir (*Pseudotsuga menziesii*)		1	1	Yes (B)	Remove
11484	10, 16	19	Douglas-fir (*Pseudotsuga menziesii*)	Codominant	1	1	Yes (B)	Remove
11485	17	17	Douglas-fir (*Pseudotsuga menziesii*)		1	1	Yes (B)	Remove
11486	18	18	Douglas-fir (*Pseudotsuga menziesii*)		1	1	Yes (B)	Remove
11487	20	20	Douglas-fir (*Pseudotsuga menziesii*)		1	1	Yes (B)	Remove
11488	20	20	Douglas-fir (*Pseudotsuga menziesii*)		1	1	Yes (B)	Remove
11489	19	19	Douglas-fir (*Pseudotsuga menziesii*)		1	1	Yes (B)	Remove
11490	18	18	Douglas-fir (*Pseudotsuga menziesii*)		1	1	Yes (B)	Remove
11491	17	17	Douglas-fir (*Pseudotsuga menziesii*)		1	1	Yes (B)	Remove
11492	18	18	Douglas-fir (*Pseudotsuga menziesii*)		1	1	Yes (B)	Remove
11493	17	17	Douglas-fir (*Pseudotsuga menziesii*)		1	1	Yes (B)	Remove
11494	15	15	Douglas-fir (*Pseudotsuga menziesii*)		1	1	Yes (B)	Remove
11495	6	6	Cherry (*Prunus sp.*)		1	1	Yes (A)	Preserve
11496	6, 8, 9, 9	19	Cherry (*Prunus sp.*)	**OFFSITE;** Codominant with many attachments at one point	1	2	No	Preserve
11497	14	14	Douglas-fir (*Pseudotsuga menziesii*)		1	1	Yes (B)	Remove
11498	13	13	Douglas-fir (*Pseudotsuga menziesii*)		1	1	Yes (B)	Remove
11499	14	14	Douglas-fir (*Pseudotsuga menziesii*)		1	1	Yes (B)	Remove
11500	13	13	Douglas-fir (*Pseudotsuga menziesii*)		1	1	Yes (B)	Remove
11501	6	6	Cherry (*Prunus sp.*)	**OFFSITE;** Lean (W)	1	1	Yes (A)	Preserve
11502	19	19	Douglas-fir (*Pseudotsuga menziesii*)		1	1	Yes (B)	Remove
11503	14	14	Douglas-fir (*Pseudotsuga menziesii*)		1	1	Yes (B)	Remove
11504	19	19	Douglas-fir (*Pseudotsuga menziesii*)		1	1	Yes (B)	Remove
11505	13, 13	18	Douglas-fir (*Pseudotsuga menziesii*)	Codominant	1	2	Yes (B)	Remove
11506	13	13	Engelmann Spruce (*Picea engelmannii*)		1	1	Yes (B)	Remove
11507	14, 20	24	Bigleaf Maple (*Acer macrophyllum*)	Codominant	1	1	No	Remove
11511	15	15	Western Redcedar (*Thuja plicata*)	Broken top	2	2	Yes (B)	Remove
11512	16	16	Western Redcedar (*Thuja plicata*)		1	1	Yes (B)	Remove
11517	7	7	Douglas-fir (*Pseudotsuga menziesii*)		1	1	Yes (A), (B)	Remove
11519	10	10	Douglas-fir (*Pseudotsuga menziesii*)		1	1	Yes (A), (B)	Remove
11520	10	10	Douglas-fir (*Pseudotsuga menziesii*)		1	1	Yes (A), (B)	Remove
11521	12	12	Douglas-fir (*Pseudotsuga menziesii*)		1	1	Yes (B)	Remove
11522	9	9	Douglas-fir (*Pseudotsuga menziesii*)		1	1	Yes (A), (B)	Remove
11523	9	9	Douglas-fir (*Pseudotsuga menziesii*)		1	1	Yes (A), (B)	Remove
11525	19	19	Douglas-fir (*Pseudotsuga menziesii*)		1	1	Yes (B)	Remove
11526	16	16	Douglas-fir (*Pseudotsuga menziesii*)		1	1	Yes (B)	Remove
11527	14	14	Douglas-fir (*Pseudotsuga menziesii*)		1	1	Yes (B)	Remove
11528	15	15	Douglas-fir (*Pseudotsuga menziesii*)		1	1	Yes (B)	Remove
11529	19	19	Douglas-fir (*Pseudotsuga menziesii*)		1	1	Yes (B)	Remove
11530	13	13	Douglas-fir (*Pseudotsuga menziesii*)		1	1	Yes (B)	Remove
11532	14	14	Douglas-fir (*Pseudotsuga menziesii*)		1	1	Yes (B)	Remove
11533	15	15	Douglas-fir (*Pseudotsuga menziesii*)		1	1	Yes (B)	Remove
11534	6	6	Western Redcedar (*Thuja plicata*)		1	1	Yes (A), (B)	Remove
11536	15	15	Douglas-fir (*Pseudotsuga menziesii*)		1	1	Yes (B)	Remove
11537	12	12	Douglas-fir (*Pseudotsuga menziesii*)		1	1	Yes (B)	Remove
11538	15	15	Douglas-fir (*Pseudotsuga menziesii*)		1	1	Yes (B)	Remove
11539	18	18	Douglas-fir (*Pseudotsuga menziesii*)	Crooked; Broken top	2	2	Yes (B)	Remove
11540	15	15	Douglas-fir (*Pseudotsuga menziesii*)		1	1	Yes (B)	Remove
11555	11	11	Douglas-fir (*Pseudotsuga menziesii*)		1	1	Yes (A), (B)	Remove
11557	17	17	Douglas-fir (*Pseudotsuga menziesii*)		1	1	Yes (B)	Remove
11559	15	15	Douglas-fir (*Pseudotsuga menziesii*)		1	1	Yes (B)	Remove
11560	12	12	Douglas-fir (*Pseudotsuga menziesii*)		1	1	Yes (B)	Remove
11561	9	9	Douglas-fir (*Pseudotsuga menziesii*)		1	1	Yes (A), (B)	Remove
11563	15	15	Douglas-fir (*Pseudotsuga menziesii*)		1	1	Yes (B)	Remove
11566	12	12	Douglas-fir (*Pseudotsuga menziesii*)		1	1	Yes (B)	Remove
11567	12	12	Douglas-fir (*Pseudotsuga menziesii*)		1	1	Yes (B)	Remove
11569	12	12	Douglas-fir (*Pseudotsuga menziesii*)		1	1	Yes (B)	Remove
11570	13	13	Douglas-fir (*Pseudotsuga menziesii*)		1	1	Yes (B)	Remove
11571	8	8	Douglas-fir (*Pseudotsuga menziesii*)		1	1	Yes (A), (B)	Remove
11573	8	8	Douglas-fir (*Pseudotsuga menziesii*)		1	1	Yes (A), (B)	Remove
11574	14	14	Douglas-fir (*Pseudotsuga menziesii*)		1	1	Yes (B)	Remove
11575	14	14	Douglas-fir (*Pseudotsuga menziesii*)		1	1	Yes (B)	Remove
11576	14	14	Douglas-fir (*Pseudotsuga menziesii*)		1	1	Yes (B)	Remove
11577	11	11	Douglas-fir (*Pseudotsuga menziesii*)		1	1	Yes (A), (B)	Remove
11578	12	12	Douglas-fir (*Pseudotsuga menziesii*)		1	1	Yes (B)	Remove
11579	13	13	Douglas-fir (*Pseudotsuga menziesii*)		1	1	Yes (B)	Remove
11581	14	14	Engelmann Spruce (*Picea engelmannii*)		1	1	Yes (B)	Remove

Detailed Tree Inventory for Knollcrest Subdivision

AKS Job No. 5132

Tree #	DBH (in.)	Equivalent DBH (in.)[1]	Tree Species Common Name (*Scientific name*)	Comments	Health Rating*	Structure Rating**	Exempt Tree***	Remove / Preserve
11583	13, 14	19	Douglas-fir (*Pseudotsuga menziesii*)	Codominant	1	2	Yes (B)	Remove
11584	9	9	Douglas-fir (*Pseudotsuga menziesii*)		1	1	Yes (A), (B)	Remove
11585	16	16	Douglas-fir (*Pseudotsuga menziesii*)		1	1	Yes (B)	Remove
11587	16	16	Douglas-fir (*Pseudotsuga menziesii*)		1	1	Yes (B)	Remove
11590	10	10	Douglas-fir (*Pseudotsuga menziesii*)		1	1	Yes (A), (B)	Remove
11592	12	12	Douglas-fir (*Pseudotsuga menziesii*)		1	1	Yes (B)	Remove
11593	13	13	Douglas-fir (*Pseudotsuga menziesii*)		1	1	Yes (B)	Remove
11594	12	12	Douglas-fir (*Pseudotsuga menziesii*)		1	1	Yes (B)	Remove
11595	15	15	Douglas-fir (*Pseudotsuga menziesii*)		1	1	Yes (B)	Remove
11596	12	12	Douglas-fir (*Pseudotsuga menziesii*)		1	1	Yes (B)	Remove
11597	17	17	Douglas-fir (*Pseudotsuga menziesii*)		1	1	Yes (B)	Remove
11600	10	10	Douglas-fir (*Pseudotsuga menziesii*)		1	1	Yes (A), (B)	Remove
11601	13	13	Douglas-fir (*Pseudotsuga menziesii*)		1	1	Yes (B)	Remove
11602	14	14	Douglas-fir (*Pseudotsuga menziesii*)		1	1	Yes (B)	Remove
11603	13	13	Douglas-fir (*Pseudotsuga menziesii*)		1	1	Yes (B)	Remove
11605	8	8	Douglas-fir (*Pseudotsuga menziesii*)		1	1	Yes (A), (B)	Remove
11606	11	11	Douglas-fir (*Pseudotsuga menziesii*)		1	1	Yes (A), (B)	Remove
11607	11	11	Douglas-fir (*Pseudotsuga menziesii*)		1	1	Yes (A), (B)	Remove
11608	9	9	Douglas-fir (*Pseudotsuga menziesii*)		1	1	Yes (A), (B)	Remove
11609	7	7	Douglas-fir (*Pseudotsuga menziesii*)		1	1	Yes (A), (B)	Remove
11610	10	10	Douglas-fir (*Pseudotsuga menziesii*)		1	1	Yes (A), (B)	Remove
11611	16	16	Douglas-fir (*Pseudotsuga menziesii*)		1	1	Yes (B)	Remove
11612	15	15	Douglas-fir (*Pseudotsuga menziesii*)		1	1	Yes (B)	Remove
11613	13	13	Douglas-fir (*Pseudotsuga menziesii*)		1	1	Yes (B)	Remove
11614	12	12	Douglas-fir (*Pseudotsuga menziesii*)		1	1	Yes (B)	Remove
11615	12	12	Douglas-fir (*Pseudotsuga menziesii*)		1	1	Yes (B)	Remove
11616	15	15	Douglas-fir (*Pseudotsuga menziesii*)		1	1	Yes (B)	Remove
11617	14	14	Douglas-fir (*Pseudotsuga menziesii*)		1	1	Yes (B)	Remove
11618	9	9	Douglas-fir (*Pseudotsuga menziesii*)		1	1	Yes (A), (B)	Remove
11619	12	12	Douglas-fir (*Pseudotsuga menziesii*)		1	1	Yes (B)	Remove
11620	10	10	Douglas-fir (*Pseudotsuga menziesii*)		1	1	Yes (A), (B)	Remove
11621	15	15	Douglas-fir (*Pseudotsuga menziesii*)		1	1	Yes (B)	Remove
11622	11	11	Douglas-fir (*Pseudotsuga menziesii*)		1	1	Yes (A), (B)	Remove
11623	7, 8	7, 8	Douglas-fir (*Pseudotsuga menziesii*)		1	1	Yes (B)	Remove
11624	9	9	Douglas-fir (*Pseudotsuga menziesii*)		1	1	Yes (A), (B)	Remove
11628	14, 14, 15, 19	31	Oregon Oak (*Quercus garryana*)	**OFFSITE;** Codominant	1	1	No	Remove
11630	9	9	Cherry (*Prunus sp.*)	**OFFSITE;** Broken top; Crooked	2	2	Yes (A)	Remove
11631	6	6	Oregon Oak (*Quercus garryana*)		1	2	No	Remove
11634	16	16	Oregon Oak (*Quercus garryana*)		1	1	No	Remove
11638	20	20	Oregon Oak (*Quercus garryana*)		1	1	No	Remove
11649	13	13	Engelmann Spruce (*Picea engelmannii*)		1	1	Yes (B)	Remove
11650	7	7	Engelmann Spruce (*Picea engelmannii*)	Lean (N)	1	2	Yes (A), (B)	Remove
11654	9	9	Douglas-fir (*Pseudotsuga menziesii*)		1	1	Yes (A), (B)	Remove
11655	14	14	Douglas-fir (*Pseudotsuga menziesii*)		1	1	Yes (B)	Remove
11659	6	6	Oregon Oak (*Quercus garryana*)		1	1	No	Remove
11660	8	8	Oregon Oak (*Quercus garryana*)	**OFFSITE**	1	1	No	Remove
11676	15	15	Ponderosa Pine (*Pinus ponderosa*)	Codominant 10' from ground with included bark	1	2	Yes (B)	Remove
11677	8	8	Ponderosa Pine (*Pinus ponderosa*)		1	1	Yes (A), (B)	Remove
11678	13	13	Ponderosa Pine (*Pinus ponderosa*)	Codominant top	1	2	Yes (B)	Remove
11679	13	13	Ponderosa Pine (*Pinus ponderosa*)	Codominant top	1	2	Yes (B)	Remove
11680	17	17	Ponderosa Pine (*Pinus ponderosa*)	Codominant 6' from ground with included bark	1	2	Yes (B)	Remove
11681	15	15	Ponderosa Pine (*Pinus ponderosa*)	Codominant top	1	1	Yes (B)	Remove
11682	7	7	Douglas-fir (*Pseudotsuga menziesii*)		1	1	Yes (A), (B)	Remove
11685	13	13	Ponderosa Pine (*Pinus ponderosa*)		1	1	Yes (B)	Remove
11687	12	12	Ponderosa Pine (*Pinus ponderosa*)		1	1	Yes (B)	Remove
11688	11	11	Ponderosa Pine (*Pinus ponderosa*)		1	1	Yes (A), (B)	Remove
11689	10	10	Ponderosa Pine (*Pinus ponderosa*)		1	1	Yes (A), (B)	Remove
11690	10	10	Ponderosa Pine (*Pinus ponderosa*)		1	1	Yes (A), (B)	Remove
11691	9	9	Ponderosa Pine (*Pinus ponderosa*)	Codominant top; Broken branches	1	2	Yes (A), (B)	Remove
11692	9	9	Ponderosa Pine (*Pinus ponderosa*)		1	1	Yes (A), (B)	Remove
11693	12	12	Ponderosa Pine (*Pinus ponderosa*)		1	1	Yes (B)	Remove
11695	6	6	Ponderosa Pine (*Pinus ponderosa*)		1	1	Yes (A), (B)	Remove
11696	7	7	Douglas-fir (*Pseudotsuga menziesii*)		1	1	Yes (A), (B)	Remove
11697	14	14	Douglas-fir (*Pseudotsuga menziesii*)		1	1	Yes (B)	Remove
11698	12	12	Engelmann Spruce (*Picea engelmannii*)		1	1	Yes (B)	Remove
11699	13	13	Engelmann Spruce (*Picea engelmannii*)		1	1	Yes (B)	Remove
11700	6	6	Engelmann Spruce (*Picea engelmannii*)		1	1	Yes (A), (B)	Remove
11702	11	11	Engelmann Spruce (*Picea engelmannii*)		1	1	Yes (A), (B)	Remove
11703	10	10	Engelmann Spruce (*Picea engelmannii*)	Sweep; Some dead foliage	2	2	Yes (A), (B)	Remove
11704	10	10	Engelmann Spruce (*Picea engelmannii*)		1	1	Yes (A), (B)	Remove
11705	12	12	Engelmann Spruce (*Picea engelmannii*)		1	1	Yes (B)	Remove
11706	6	6	Willow (*Salix sp.*)	Crooked	1	2	Yes (A)	Remove
11707	10	10	Engelmann Spruce (*Picea engelmannii*)		1	1	Yes (A), (B)	Remove
11708	8	8	Engelmann Spruce (*Picea engelmannii*)		1	1	Yes (A), (B)	Remove
11712	9	9	Engelmann Spruce (*Picea engelmannii*)		1	1	Yes (A), (B)	Remove
11714	8	8	Engelmann Spruce (*Picea engelmannii*)		1	1	Yes (A), (B)	Remove
11715	10	10	Engelmann Spruce (*Picea engelmannii*)		1	1	Yes (A), (B)	Remove
11716	7	7	Engelmann Spruce (*Picea engelmannii*)	Codominant with included bark; Sparse foliage	2	2	Yes (A), (B)	Remove
11717	7	7	Engelmann Spruce (*Picea engelmannii*)	Dead	3	3	Yes (A), (B)	Remove
11718	6	6	Bigleaf Maple (*Acer macrophyllum*)	Lean (E)	1	1	Yes (A)	Remove
11719	17	17	Douglas-fir (*Pseudotsuga menziesii*)		1	1	Yes (B)	Remove
11720	13	13	Douglas-fir (*Pseudotsuga menziesii*)		1	1	Yes (B)	Remove
11721	13	13	Douglas-fir (*Pseudotsuga menziesii*)		1	1	Yes (B)	Remove
11722	13	13	Douglas-fir (*Pseudotsuga menziesii*)	Sweep	1	1	Yes (B)	Remove
11724	10	10	Douglas-fir (*Pseudotsuga menziesii*)		1	1	Yes (A), (B)	Remove
11725	8	8	Douglas-fir (*Pseudotsuga menziesii*)		1	1	Yes (A), (B)	Remove
11727	10	10	Douglas-fir (*Pseudotsuga menziesii*)		1	1	Yes (A), (B)	Remove
11728	12	12	Douglas-fir (*Pseudotsuga menziesii*)		1	1	Yes (B)	Remove
11729	9	9	Black Cottonwood (*Populus trichocarpa*)		1	1	Yes (A)	Remove
11730	11	11	Engelmann Spruce (*Picea engelmannii*)		1	1	Yes (A), (B)	Remove
11732	7, 8	11	Engelmann Spruce (*Picea engelmannii*)	Codominant with included bark	1	2	Yes (A), (B)	Remove
11733	11	11	Engelmann Spruce (*Picea engelmannii*)		1	1	Yes (A), (B)	Remove
11734	10	10	Engelmann Spruce (*Picea engelmannii*)		1	1	Yes (A), (B)	Remove
11737	6, 8	10	Western Redcedar (*Thuja plicata*)	Very sparse foliage; Bore holes	3	2	Yes (A), (B)	Remove
11738	11	11	Engelmann Spruce (*Picea engelmannii*)		1	1	Yes (A), (B)	Remove
11739	8	8	Western Redcedar (*Thuja plicata*)	Codominant stem previously removed; Sparse foliage	3	3	Yes (A), (B)	Remove
11740	9	9	Western Redcedar (*Thuja plicata*)	Very sparse foliage	3	2	Yes (A), (B)	Remove
11741	10	10	Western Redcedar (*Thuja plicata*)	Very sparse foliage	3	2	Yes (A), (B)	Remove
11742	12	12	Douglas-fir (*Pseudotsuga menziesii*)		1	1	Yes (B)	Remove
11743	6	6	Western Redcedar (*Thuja plicata*)		1	1	Yes (A), (B)	Remove

Detailed Tree Inventory for Knollcrest Subdivision

AKS Job No. 5132

Tree #	DBH (in.)	Equivalent DBH (in.)[1]	Tree Species Common Name (*Scientific name*)	Comments	Health Rating*	Structure Rating**	Exempt Tree***	Remove / Preserve
11744	13	13	Douglas-fir (*Pseudotsuga menziesii*)		1	1	Yes (B)	Remove
11745	12	12	Douglas-fir (*Pseudotsuga menziesii*)		1	1	Yes (B)	Remove
11746	12	12	Douglas-fir (*Pseudotsuga menziesii*)		1	1	Yes (B)	Remove
11747	8	8	Douglas-fir (*Pseudotsuga menziesii*)		1	1	Yes (A), (B)	Remove
11748	18	18	Douglas-fir (*Pseudotsuga menziesii*)		1	1	Yes (B)	Remove
11753	15	15	Douglas-fir (*Pseudotsuga menziesii*)		1	1	Yes (B)	Remove
11754	12	12	Douglas-fir (*Pseudotsuga menziesii*)		1	1	Yes (B)	Remove
11755	14	14	Douglas-fir (*Pseudotsuga menziesii*)		1	1	Yes (B)	Remove
11756	12	12	Douglas-fir (*Pseudotsuga menziesii*)		1	1	Yes (B)	Remove
11757	19	19	Douglas-fir (*Pseudotsuga menziesii*)	Sap flow	1	1	Yes (B)	Remove
11758	9	9	Douglas-fir (*Pseudotsuga menziesii*)		1	1	Yes (A), (B)	Remove
11759	6	6	Douglas-fir (*Pseudotsuga menziesii*)		1	1	Yes (A), (B)	Remove
11760	9	9	Douglas-fir (*Pseudotsuga menziesii*)		1	1	Yes (A), (B)	Remove
11761	7	7	Douglas-fir (*Pseudotsuga menziesii*)		1	1	Yes (A), (B)	Remove
11762	18	18	Douglas-fir (*Pseudotsuga menziesii*)		1	1	Yes (B)	Remove
11763	14	14	Douglas-fir (*Pseudotsuga menziesii*)		1	1	Yes (B)	Remove
11764	7	7	Douglas-fir (*Pseudotsuga menziesii*)		1	1	Yes (A), (B)	Remove
11765	14	14	Douglas-fir (*Pseudotsuga menziesii*)	Sweep	1	2	Yes (B)	Remove
11766	6	6	Douglas-fir (*Pseudotsuga menziesii*)		1	1	Yes (A), (B)	Remove
11767	8	8	Douglas-fir (*Pseudotsuga menziesii*)		1	1	Yes (A), (B)	Remove
11768	10	10	Douglas-fir (*Pseudotsuga menziesii*)	Sweep	1	2	Yes (A), (B)	Remove
11769	8	8	Western Redcedar (*Thuja plicata*)	Sparse foliage	2	1	Yes (A), (B)	Remove
11770	16	16	Western Redcedar (*Thuja plicata*)	Snag	3	3	Yes (B)	Remove
11781	7	7	Pear (*Pyrus sp.*)		1	1	Yes (A)	Remove
11805	15	15	Ponderosa Pine (*Pinus ponderosa*)	Codominant top	1	1	Yes (B)	Remove
11806	14	14	Ponderosa Pine (*Pinus ponderosa*)		1	1	Yes (B)	Remove
11807	14	14	Ponderosa Pine (*Pinus ponderosa*)	Codominant top	1	2	Yes (B)	Remove
11808	13	13	Ponderosa Pine (*Pinus ponderosa*)		1	1	Yes (B)	Remove
11809	14	14	Ponderosa Pine (*Pinus ponderosa*)		1	1	Yes (B)	Remove
11810	13	13	Ponderosa Pine (*Pinus ponderosa*)		1	1	Yes (B)	Remove
11811	14	14	Ponderosa Pine (*Pinus ponderosa*)		1	1	Yes (B)	Remove
11812	11	11	Ponderosa Pine (*Pinus ponderosa*)		1	1	Yes (A), (B)	Remove
11813	11	11	Ponderosa Pine (*Pinus ponderosa*)		1	1	Yes (A), (B)	Remove
11814	11	11	Ponderosa Pine (*Pinus ponderosa*)		1	1	Yes (A), (B)	Remove
11815	12	12	Ponderosa Pine (*Pinus ponderosa*)		1	1	Yes (B)	Remove
11816	9	9	Ponderosa Pine (*Pinus ponderosa*)		1	1	Yes (A), (B)	Remove
11817	9	9	Ponderosa Pine (*Pinus ponderosa*)		1	1	Yes (A), (B)	Remove
11818	21	21	Ponderosa Pine (*Pinus ponderosa*)	Codominant 5' from ground with included bark	1	2	Yes (B)	Remove
11819	10	10	Ponderosa Pine (*Pinus ponderosa*)		1	1	Yes (A), (B)	Remove
11820	10	10	Ponderosa Pine (*Pinus ponderosa*)		1	1	Yes (A), (B)	Remove
11821	14	14	Ponderosa Pine (*Pinus ponderosa*)	Codominant top	1	2	Yes (B)	Remove
11823	10	10	European White Birch (*Betula pendula*)	Lean (S); Bore holes; Broken branches; Dead branches	2	2	Yes (A)	Remove
11824	6	6	Bigleaf Maple (*Acer macrophyllum*)	Scars	1	2	Yes (A)	Remove
11825	9	9	Douglas-fir (*Pseudotsuga menziesii*)		1	1	Yes (A), (B)	Remove
11827	6	6	English Hawthorn (*Crataegus monogyna*)		1	1	Yes (A)	Remove
11829	8	8	Ponderosa Pine (*Pinus ponderosa*)	Crooked	1	2	Yes (A), (B)	Remove
11836	6, 6, 7	11	English Hawthorn (*Crataegus monogyna*)	Codominant	1	1	Yes (A)	Remove
11837	6	6	Douglas-fir (*Pseudotsuga menziesii*)		1	1	Yes (A), (B)	Preserve
11842	12	12	Ponderosa Pine (*Pinus ponderosa*)	Very crooked; Broken branches	2	3	Yes (B)	Remove
11843	13	13	Black Cottonwood (*Populus trichocarpa*)		1	1	No	Remove
11844	12	12	Western Redcedar (*Thuja plicata*)		1	1	Yes (B)	Remove
11887	6	6	Western Redcedar (*Thuja plicata*)		1	1	Yes (A), (B)	Remove
11888	10	10	Douglas-fir (*Pseudotsuga menziesii*)		1	1	Yes (A), (B)	Remove
11889	24	24	Douglas-fir (*Pseudotsuga menziesii*)		1	1	Yes (B)	Remove
11894	16	16	Hemlock (*Tsuga sp.*)	Canopy one sided (E)	2	1	Yes (B)	Remove
11899	16	16	Red Alder (*Alnus rubra*)		1	1	No	Remove
11900	11	11	Western Redcedar (*Thuja plicata*)		1	1	Yes (A), (B)	Remove
11902	7	7	Cherry (*Prunus sp.*)	Very sparse foliage; Decay	3	3	Yes (A)	Remove
11903	7	7	Cherry (*Prunus sp.*)	Very sparse foliage; Decay	3	3	Yes (A)	Remove
11908	9, 10, 11	17	Cherry (*Prunus sp.*)	Codominant; Crooked; 9" & 10" stems topped for overhead wires	2	3	No	Remove
11911	9	9	Cherry (*Prunus sp.*)	Topped for overhead wires; No live foliage	3	3	Yes (A)	Remove
11912	13	13	Cherry (*Prunus sp.*)	Topped for overhead wires; No live foliage	3	3	No	Remove
11913	10	10	Cherry (*Prunus sp.*)	Topped for overhead wires; Decay	3	3	Yes (A)	Remove
11914	11	11	Cherry (*Prunus sp.*)	Topped for overhead wires; Decay	3	3	Yes (A)	Remove
11915	10	10	Cherry (*Prunus sp.*)	Scars; Cracks; Decay; Crooked	2	3	Yes (A)	Remove
11923	6, 6, 7, 8	14	Cherry (*Prunus sp.*)	Codominant; Crooked; Sparse foliage	3	2	No	Remove
11924	8	8	Cherry (*Prunus sp.*)	Crooked; Sparse foliage	3	2	Yes (A)	Remove
11927	6, 10, 12	17	Cherry (*Prunus sp.*)	Codominant; 6" stem removed; Pruned for overhead wires; Crooked; Dead top; Sparse foliage	3	3	No	Remove
11928	8, 8, 9	14	Cherry (*Prunus sp.*)	Codominant; Pruned for overhead wires; Crooked; Dead top; Sparse foliage	3	3	No	Remove
11937	6, 9	11	English Hawthorn (*Crataegus monogyna*)	Codominant; Sparse foliage; Crooked	2	2	Yes (A)	Remove
11938	6, 8	10	English Hawthorn (*Crataegus monogyna*)	Codominant; Sparse foliage; Crooked	2	2	Yes (A)	Remove
11939	7	7	English Hawthorn (*Crataegus monogyna*)	Dead	3	3	Yes (A)	Remove
11940	6	6	English Hawthorn (*Crataegus monogyna*)	Dead	3	3	Yes (A)	Remove
11944	7	7	Cherry (*Prunus sp.*)	Sparse foliage	2	2	Yes (A)	Remove
11976	14	14	Douglas-fir (*Pseudotsuga menziesii*)	Sweep	1	1	Yes (B)	Remove
11977	8, 11	14	Cherry (*Prunus sp.*)	Codominant; Crooked	1	2	No	Remove
11980	13	13	Cherry (*Prunus sp.*)	Lean (S); Sparse foliage; Cavities with decay; Broken branches	2	3	No	Remove
11984	14	14	Cherry (*Prunus sp.*)	Sparse foliage	2	1	No	Remove
11985	6	6	Cherry (*Prunus sp.*)	Lean (N)	1	2	Yes (A)	Remove
11989	15	15	Ponderosa Pine (*Pinus ponderosa*)	Codominant 6' from ground with included bark	1	2	Yes (B)	Preserve
11990	10	10	Douglas-fir (*Pseudotsuga menziesii*)		1	1	Yes (A), (B)	Preserve
11991	8, 11	14	Cherry (*Prunus sp.*)	Codominant; Crooked	1	1	No	Preserve
12047	8	8	Ponderosa Pine (*Pinus ponderosa*)	Broken top	2	2	Yes (A), (B)	Remove
12048	10	10	Douglas-fir (*Pseudotsuga menziesii*)		1	1	Yes (A), (B)	Remove
12064	8	8	English Hawthorn (*Crataegus monogyna*)		1	1	Yes (A)	Remove
12069	9	9	Douglas-fir (*Pseudotsuga menziesii*)		1	1	Yes (A), (B)	Remove
12071	14	14	Douglas-fir (*Pseudotsuga menziesii*)	Codominant top	1	2	Yes (B)	Remove
12075	17	17	Ponderosa Pine (*Pinus ponderosa*)	Codominant top	1	2	Yes (B)	Preserve
12077	21	21	Ponderosa Pine (*Pinus ponderosa*)	Codominant 6' from ground	1	2	Yes (B)	Preserve
12078	21	21	Ponderosa Pine (*Pinus ponderosa*)	Many stems attached at one point	1	2	Yes (B)	Preserve
12082	9	9	Engelmann Spruce (*Picea engelmannii*)		1	1	Yes (A), (B)	Preserve
12083	9	9	Ponderosa Pine (*Pinus ponderosa*)	Lean (W); Crooked	1	2	Yes (A), (B)	Preserve
12088	10	10	Engelmann Spruce (*Picea engelmannii*)	Codominant top	1	2	Yes (A), (B)	Preserve
12090	8	8	Engelmann Spruce (*Picea engelmannii*)		1	1	Yes (A), (B)	Preserve
12091	9	9	Douglas-fir (*Pseudotsuga menziesii*)		1	1	Yes (A), (B)	Preserve
12096	6	6	Oregon Oak (*Quercus garryana*)		1	1	No	Preserve
12098	13	13	Engelmann Spruce (*Picea engelmannii*)		1	1	Yes (B)	Preserve
12100	6	6	Douglas-fir (*Pseudotsuga menziesii*)		1	1	Yes (A), (B)	Preserve

AKS

AKS ENGINEERING & FORESTRY, LLC
12965 SW HERMAN RD STE 100
TUALATIN, OR 97062
P: 503.563.6151
F: 503.563.6152
aks-eng.com

ENGINEERING · SURVEYING · NATURAL RESOURCES
FORESTRY · PLANNING · LANDSCAPE ARCHITECTURE

KNOLLCREST SUBDIVISION

WEST LINN OREGON

TAX LOTS 100 & 200 CLACKAMAS COUNTY TAX MAP 2 1E 25CC

TREE PRESERVATION AND REMOVAL TABLE

DESIGNED BY: CLR

DRAWN BY: NSL/AMF

CHECKED BY: RSW

SCALE: AS NOTED

DATE: 07/30/2018

REGISTERED PROFESSIONAL ENGINEER 58542PE OREGON JULY 9, 2002 MONTGOMERY B. HURLEY

RENEWAL DATE: 6/30/19

REVISIONS

JOB NUMBER 5132

SHEET C033

Detailed Tree Inventory for Knollcrest Subdivision

AKS Job No. 5132

Tree #	DBH (in.)	Equivalent DBH (in.)[1]	Tree Species Common Name (*Scientific name*)	Comments	Health Rating*	Structure Rating**	Exempt Tree***	Remove / Preserve
12101	15	15	Douglas-fir (*Pseudotsuga menziesii*)		1	1	Yes (B)	Preserve
12102	16, 18	24	Douglas-fir (*Pseudotsuga menziesii*)	Codominant	1	2	Yes (B)	Preserve
12103	9	9	Douglas-fir (*Pseudotsuga menziesii*)		1	1	Yes (A), (B)	Preserve
12104	9	9	Cherry (*Prunus sp.*)		1	1	Yes (A)	Preserve
12106	10	10	Engelmann Spruce (*Picea engelmannii*)		1	1	Yes (A), (B)	Preserve
12108	12	12	Engelmann Spruce (*Picea engelmannii*)		1	1	Yes (B)	Preserve
12109	13	13	Ponderosa Pine (*Pinus ponderosa*)	Codominant top	1	2	Yes (B)	Preserve
12110	11	11	Douglas-fir (*Pseudotsuga menziesii*)		1	1	Yes (A), (B)	Preserve
12111	11	11	Ponderosa Pine (*Pinus ponderosa*)	Codominant top	1	2	Yes (A), (B)	Preserve
12112	8	8	Engelmann Spruce (*Picea engelmannii*)		1	1	Yes (A), (B)	Preserve
12113	15	15	Douglas-fir (*Pseudotsuga menziesii*)		1	1	Yes (B)	Preserve
12115	9	9	Oregon Oak (*Quercus garryana*)		1	1	No	Preserve
12116	7	7	English Hawthorn (*Crataegus monogyna*)		1	1	Yes (A)	Preserve
12143	13	13	Engelmann Spruce (*Picea engelmannii*)		1	1	Yes (B)	Preserve
12144	14	14	Ponderosa Pine (*Pinus ponderosa*)	Codominant top	1	2	Yes (B)	Preserve
12145	14	14	Ponderosa Pine (*Pinus ponderosa*)	Codominant top	1	2	Yes (B)	Preserve
12146	11	11	Engelmann Spruce (*Picea engelmannii*)		1	1	Yes (A), (B)	Preserve
12147	9	9	Douglas-fir (*Pseudotsuga menziesii*)		1	1	Yes (A), (B)	Remove
12148	10	10	Douglas-fir (*Pseudotsuga menziesii*)		1	1	Yes (A), (B)	Remove
12149	18	18	Douglas-fir (*Pseudotsuga menziesii*)		1	1	Yes (B)	Remove
12150	11	11	Ponderosa Pine (*Pinus ponderosa*)		1	1	Yes (A), (B)	Remove
12151	12	12	Ponderosa Pine (*Pinus ponderosa*)		1	1	Yes (B)	Remove
12152	10	10	Western Redcedar (*Thuja plicata*)		1	1	Yes (A), (B)	Remove
12153	12	12	Ponderosa Pine (*Pinus ponderosa*)		1	1	Yes (B)	Remove
12154	12	12	Ponderosa Pine (*Pinus ponderosa*)		1	1	Yes (B)	Remove
12155	12	12	Ponderosa Pine (*Pinus ponderosa*)		1	1	Yes (B)	Remove
12156	12	12	Ponderosa Pine (*Pinus ponderosa*)		1	1	Yes (B)	Remove
12157	7	7	Western Redcedar (*Thuja plicata*)		1	1	Yes (A), (B)	Remove
12158	9	9	Apple (*Malus sp.*)	Broken branches; Cavities; Decay	2	2	Yes (A)	Remove
12159	11	11	Ponderosa Pine (*Pinus ponderosa*)		1	1	Yes (A), (B)	Remove
12160	12	12	Ponderosa Pine (*Pinus ponderosa*)	Codominant top	1	2	Yes (B)	Remove
12161	12	12	Ponderosa Pine (*Pinus ponderosa*)		1	1	Yes (B)	Remove
12162	13	13	Douglas-fir (*Pseudotsuga menziesii*)		1	1	Yes (B)	Remove
12170	12	12	Douglas-fir (*Pseudotsuga menziesii*)	Codominant top	1	2	Yes (B)	Remove
12171	10	10	Douglas-fir (*Pseudotsuga menziesii*)		1	1	Yes (A), (B)	Remove
12172	14	14	Douglas-fir (*Pseudotsuga menziesii*)		1	1	Yes (B)	Remove
12173	12	12	Douglas-fir (*Pseudotsuga menziesii*)		1	1	Yes (B)	Remove
12174	9	9	Douglas-fir (*Pseudotsuga menziesii*)		1	1	Yes (A), (B)	Preserve
12176	14	14	Douglas-fir (*Pseudotsuga menziesii*)		1	1	Yes (B)	Remove
12185	13	13	Douglas-fir (*Pseudotsuga menziesii*)	Codominant top	1	2	Yes (B)	Remove
12186	11	11	Douglas-fir (*Pseudotsuga menziesii*)		1	1	Yes (A), (B)	Remove
12187	13	13	Douglas-fir (*Pseudotsuga menziesii*)		1	1	Yes (B)	Preserve
12188	10	10	Douglas-fir (*Pseudotsuga menziesii*)		1	1	Yes (A), (B)	Remove
12189	12	12	Douglas-fir (*Pseudotsuga menziesii*)		1	1	Yes (B)	Remove
12190	14	14	Douglas-fir (*Pseudotsuga menziesii*)		1	1	Yes (B)	Remove
12191	6	6	Douglas-fir (*Pseudotsuga menziesii*)		1	1	Yes (A), (B)	Remove
12192	6	6	Douglas-fir (*Pseudotsuga menziesii*)		1	1	Yes (A), (B)	Remove
12194	12	12	Engelmann Spruce (*Picea engelmannii*)		1	1	Yes (B)	Preserve
12195	10	10	Engelmann Spruce (*Picea engelmannii*)		1	1	Yes (A), (B)	Preserve
12196	10	10	Engelmann Spruce (*Picea engelmannii*)		1	1	Yes (A), (B)	Preserve
12197	13	13	Ponderosa Pine (*Pinus ponderosa*)	Codominant top	1	2	Yes (B)	Preserve
12198	12	12	Engelmann Spruce (*Picea engelmannii*)		1	1	Yes (B)	Preserve
12199	9	9	Engelmann Spruce (*Picea engelmannii*)		1	1	Yes (A), (B)	Preserve
12200	12	12	Ponderosa Pine (*Pinus ponderosa*)		1	1	Yes (B)	Preserve
12202	8	8	Douglas-fir (*Pseudotsuga menziesii*)		1	1	Yes (A), (B)	Remove
12203	8	8	Douglas-fir (*Pseudotsuga menziesii*)		1	1	Yes (A), (B)	Remove
12204	11	11	Douglas-fir (*Pseudotsuga menziesii*)		1	1	Yes (A), (B)	Remove
12205	6	6	English Hawthorn (*Crataegus monogyna*)		1	1	Yes (A)	Remove
12206	9	9	Douglas-fir (*Pseudotsuga menziesii*)		1	1	Yes (A), (B)	Remove
12207	15	15	Douglas-fir (*Pseudotsuga menziesii*)		1	1	Yes (B)	Remove
12208	13	13	Douglas-fir (*Pseudotsuga menziesii*)		1	1	Yes (B)	Remove
12209	11	11	Douglas-fir (*Pseudotsuga menziesii*)		1	1	Yes (A), (B)	Remove
12210	10	10	Douglas-fir (*Pseudotsuga menziesii*)		1	1	Yes (A), (B)	Remove
12211	12	12	Douglas-fir (*Pseudotsuga menziesii*)		1	1	Yes (B)	Remove
12212	11	11	Douglas-fir (*Pseudotsuga menziesii*)		1	1	Yes (A), (B)	Remove
12213	12	12	Douglas-fir (*Pseudotsuga menziesii*)		1	1	Yes (B)	Remove
12239	10	10	Ponderosa Pine (*Pinus ponderosa*)		1	1	Yes (A), (B)	Remove
12240	13	13	Ponderosa Pine (*Pinus ponderosa*)	codominant top	1	2	Yes (B)	Remove
12241	16	16	Ponderosa Pine (*Pinus ponderosa*)		1	1	Yes (B)	Remove
12242	11	11	Ponderosa Pine (*Pinus ponderosa*)		1	1	Yes (A), (B)	Remove
12243	14	14	Ponderosa Pine (*Pinus ponderosa*)		1	1	Yes (B)	Remove
12245	14	14	Ponderosa Pine (*Pinus ponderosa*)		1	1	Yes (B)	Remove
12247	14	14	Ponderosa Pine (*Pinus ponderosa*)		1	1	Yes (B)	Remove
12249	6, 7	9	Apple (*Malus sp.*)	Codominant	1	1	Yes (A)	Remove
12250	17	17	Ponderosa Pine (*Pinus ponderosa*)	Codominant top	1	2	Yes (B)	Remove
12251	12	12	Ponderosa Pine (*Pinus ponderosa*)		1	1	Yes (B)	Remove
12252	12	12	Ponderosa Pine (*Pinus ponderosa*)	Codominant top	1	2	Yes (B)	Remove
12253	7	7	Douglas-fir (*Pseudotsuga menziesii*)		1	1	Yes (A), (B)	Remove
12255	13	13	Douglas-fir (*Pseudotsuga menziesii*)		1	1	Yes (B)	Remove
12256	10	10	Douglas-fir (*Pseudotsuga menziesii*)		1	1	Yes (A), (B)	Remove
12257	12	12	Douglas-fir (*Pseudotsuga menziesii*)		1	1	Yes (B)	Remove
12258	12	12	Douglas-fir (*Pseudotsuga menziesii*)		1	1	Yes (B)	Preserve
12259	10	10	English Hawthorn (*Crataegus monogyna*)		1	1	Yes (A)	Preserve
12267	13	13	Engelmann Spruce (*Picea engelmannii*)		1	1	Yes (B)	Preserve
12268	13	13	Engelmann Spruce (*Picea engelmannii*)		1	1	Yes (B)	Preserve
20047	5	5	Plum (*Prunus sp.*)		1	1	Yes (A)	Remove
20053	12	12	Western Redcedar (*Thuja plicata*)		1	1	Yes (B)	Remove
20146	14	14	Douglas-fir (*Pseudotsuga menziesii*)		1	1	Yes (B)	Remove
20147	13	13	Douglas-fir (*Pseudotsuga menziesii*)		1	1	Yes (B)	Remove
20148	13	13	Douglas-fir (*Pseudotsuga menziesii*)		1	1	Yes (B)	Remove
20149	17	17	Douglas-fir (*Pseudotsuga menziesii*)		1	1	Yes (B)	Remove
20150	9	9	Douglas-fir (*Pseudotsuga menziesii*)		1	1	Yes (A), (B)	Remove
20151	18	18	Douglas-fir (*Pseudotsuga menziesii*)	Codominant top	1	2	Yes (B)	Remove
20152	15	15	Douglas-fir (*Pseudotsuga menziesii*)		1	1	Yes (B)	Remove
20153	13	13	Ponderosa Pine (*Pinus ponderosa*)	Codominant top	1	2	Yes (B)	Remove
20154	13	13	Ponderosa Pine (*Pinus ponderosa*)	Codominant top	1	2	Yes (B)	Remove
20155	15	15	Ponderosa Pine (*Pinus ponderosa*)	Codominant top	1	2	Yes (B)	Remove
20156	18	18	Ponderosa Pine (*Pinus ponderosa*)	Codominant top	1	2	Yes (B)	Remove
20157	15	15	Ponderosa Pine (*Pinus ponderosa*)		1	1	Yes (B)	Remove
20194	6	6	Apple (*Malus sp.*)		1	1	Yes (A)	Remove

Detailed Tree Inventory for Knollcrest Subdivision

AKS Job No. 5132

Tree #	DBH (in.)	Equivalent DBH (in.)[1]	Tree Species Common Name (*Scientific name*)	Comments	Health Rating*	Structure Rating**	Exempt Tree***	Remove / Preserve
20208	8	8	Bigleaf Maple (*Acer macrophyllum*)		1	1	Yes (A)	Remove
20209	11	11	Bigleaf Maple (*Acer macrophyllum*)		1	1	Yes (A)	Remove
20210	25	25	Douglas-fir (*Pseudotsuga menziesii*)		1	1	Yes (B)	Remove
20211	6	6	Western Redcedar (*Thuja plicata*)		1	1	Yes (A), (B)	Remove
25076	7	7	Red Alder (*Alnus rubra*)	**OFFSITE;** Some dead foliage	2	1	Yes (A)	Preserve
25094	10	10	Red Alder (*Alnus rubra*)	**OFFSITE**	1	1	Yes (A)	Preserve
25095	7	7	Red Alder (*Alnus rubra*)	**OFFSITE**	1	1	Yes (A)	Preserve
60000	12	12	Douglas-fir (*Pseudotsuga menziesii*)		1	1	Yes (B)	Remove
60001	21	21	Western Redcedar (*Thuja plicata*)		1	1	Yes (B)	Remove
60002	14	14	Douglas-fir (*Pseudotsuga menziesii*)	Codominant top	1	2	Yes (B)	Remove
60003	11	11	Western Redcedar (*Thuja plicata*)		1	1	Yes (A), (B)	Remove
60004	14	14	Douglas-fir (*Pseudotsuga menziesii*)		1	1	Yes (B)	Remove
60005	7, 11	13	Oregon Oak (*Quercus garryana*)	Some dead branches	2	2	No	Remove
60006	18	18	Douglas-fir (*Pseudotsuga menziesii*)		1	1	Yes (B)	Remove
60007	13	13	Douglas-fir (*Pseudotsuga menziesii*)		1	1	Yes (B)	Remove
60008	18	18	Douglas-fir (*Pseudotsuga menziesii*)		1	1	Yes (B)	Remove
60009	13	13	Douglas-fir (*Pseudotsuga menziesii*)		1	1	Yes (B)	Remove
60010	9	9	Red Alder (*Alnus rubra*)		1	1	Yes (A)	Preserve

Total # of Existing Trees Inventoried = 716

Total # of Existing Onsite Trees Inventoried = 674
Total # of Existing Onsite Trees to be Preserved = 75
Total # of Existing Onsite Trees to be Removed = 599
Total # of Existing Onsite Trees to be Removed that are Exempt = 581
Total # of Existing Onsite Trees to be Removed that are Not Exempt = 18
Total # of Existing Onsite Trees to be Removed that are Not Exempt, but are in Poor Condition = 7

Total # of Existing Offsite Trees Inventoried = 42
Total # of Existing Offsite Trees to be Preserved = 39
Total # of Existing Offsite Trees to be Removed = 3
Total # of Existing Offsite Trees to be Removed that are Exempt = 1
Total # of Existing Offsite Trees to be Removed that are Not Exempt = 2

[1]Equivalent DBH (in.):
Equivalent DBH (in.) Based on Basal Area.

***Health Rating:**
1 = Good Health - A tree that exhibits typical foliage, bark, and root characteristics, for its respective species, shows no signs of infection or infestation, and has a high level of vigor and vitality.
2 = Fair Health - A tree that exhibits some abnormal health characteristics and/or shows some signs of infection or infestation, but may be reversed or abated with supplemental treatment.
3 = Poor Health - A tree that is in significant decline, to the extent that supplemental treatment would not likely result in reversing or abating its decline.

****Structure Rating:**
1 = Good Structure - A tree that exhibits typical physical form characteristics, for its respective species, shows no signs of structural defects of the canopy, trunk, and/or root system.
2 = Fair Structure - A tree that exhibits some abnormal physical form characteristics and/or some signs of structural defects, which reduce the structural integrity of the tree, but are not indicative of imminent physical failure, and may be corrected using arboricultural abatement methods.
3 = Poor Structure - A tree that exhibits extensively abnormal physical form characteristics and/or significant structural defects that substantially reduces the structural viability of the tree, cannot feasibly be abated, and are indicative of imminent physical failure.

*****Exempt Tree:**
"Yes (A)": Per the City of West Linn's Community Tree Ordinance, Chapter 8.510, trees listed above as exempt do not meet the City's definition of a tree. A tree is defined as: "Any woody, perennial plant, deciduous, evergreen, or coniferous, having a main stem or trunk of a minimum of 6 inch DBH for Oregon white oak, Pacific madrone, and Pacific dogwood, and 12 inch DBH for all other tree species."
"Yes (B)": Trees that were planted with the spacing and intent of being harvested for timber or as nursery stock as determined by a Certified Arborist are not regulated, therefore they are exempt from the City's tree ordinance.

Arborist Disclosure Statement:
Arborists are tree specialists who use their education, knowledge, training, and experience to examine trees, recommend measures to enhance the health of trees, and attempt to reduce the risk of living near trees. The Client and Jurisdiction may choose to accept or disregard the recommendations of the arborist, or seek additional advice. Arborists cannot detect every condition that could possibly lead to the structural failure of a tree. Trees are living organisms that fail in ways we do not fully understand. Conditions are often hidden within trees and below ground. Arborists cannot guarantee that a tree will be healthy or safe under all circumstances, or for a specified period of time. Likewise, remedial treatments, like medicine, cannot be guaranteed. Trees can be managed, but they cannot be controlled. To live near trees is to accept some degree of risk. The only way to eliminate all risk associated with trees is to eliminate all trees. Neither this author nor AKS Engineering & Forestry, LLC have assumed any responsibility for liability associated with the trees on or adjacent to this site.

At the completion of construction, all trees should once again be reviewed. Land clearing and removal of adjacent trees can expose previously unseen defects and otherwise healthy trees can be damaged during construction.

PRELIMINARY

CERTIFIED ARBORIST
BRUCE R. BALDWIN
CERTIFICATE NUMBER: PN-6666A
EXPIRATION DATE: 12/31/20

AKS ENGINEERING & FORESTRY, LLC
12965 SW HERMAN RD STE 100
TUALATIN, OR 97062
P: 503.563.6151
F: 503.563.6152
aks-eng.com

ENGINEERING - SURVEYING - NATURAL RESOURCES

KNOLLCREST SUBDIVISION

WEST LINN OREGON

TREE PRESERVATION AND REMOVAL TABLE

DESIGNED BY:
DRAWN BY: NSL/
CHECKED BY: F
SCALE: AS NO
DATE: 07/30/2018

REGISTERED PROFESSIONAL ENGINEER 58548PE OREGON JULY 9, 2013 MONTGOMERY B. HURLEY
RENEWAL DATE: 6/30/1

REVISIONS

JOB NUMBER 5132

SHEET C034

AKS DRAWING FILE: 5132 TREE TABLE.DWG | LAYOUT: C034

KNOLLCREST SUBDIVISION

DEMOLITION,GRADING, AND EROSION & SEDIMENT CONTROL

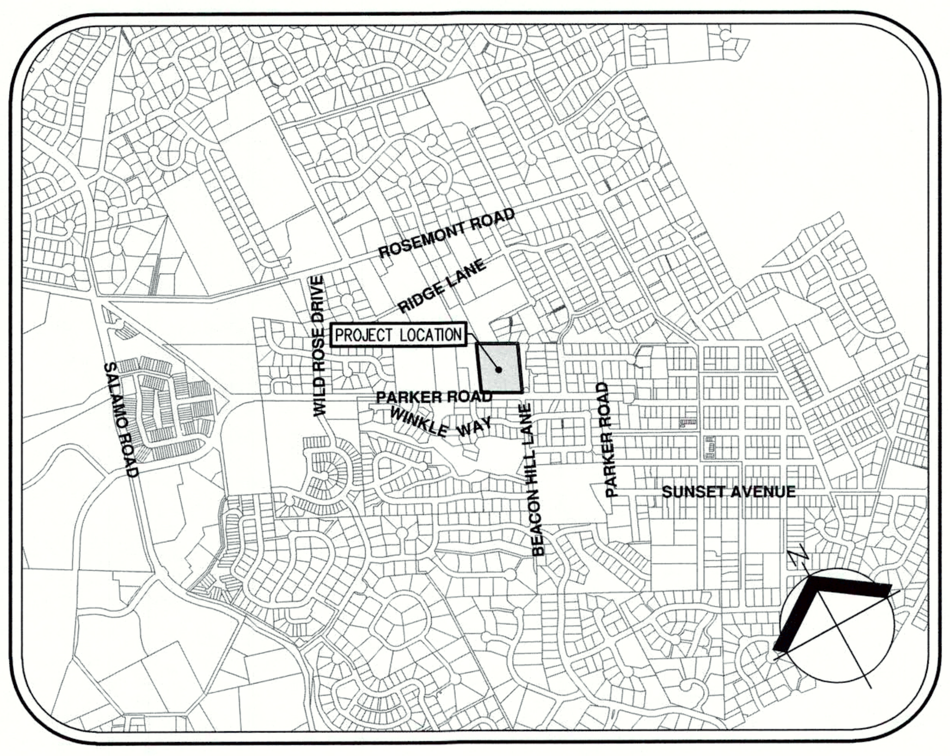

VICINITY MAP

SCALE: 1" = 1000'

NARRATIVE DESCRIPTIONS

OWNER/ APPLICANT:
NOELL AND CAROL PRICE
3015 PARKER ROAD
WEST LINN, OR 97068

EXISTING SITE CONDITIONS
SINGLE FAMILY HOME AND TREE FARM

DEVELOPED CONDITIONS:
TWELVE-LOT RESIDENTIAL SUBDIVISION FOR FUTURE SINGLE-FAMILY DETACHED HOMES IN THE R-10 ZONE WITH A STORMWATER FACILITY.

NATURE OF CONSTRUCTION ACTIVITY AND TIMETABLE FOR MAJOR ACTIVITIES:
- CLEARING (MAY)
- GRADING [EXCAVATION AND FILL] (MAY - JULY)
- INSTALLATION OF UTILITIES (JULY - AUGUST)
- FINAL STABILIZATION (AUGUST - SEPTEMBER)

(INCLUDES AREA WITHIN THE SITE BOUNDARY AND DISTURBED AREA OUTSIDE OF THE SITE BOUNDARY)

TOTAL SITE AREA = 3.52 ACRES±

TOTAL DISTURBED AREA = 3.31 ACRES±

LATITUDE AND LONGITUDE:
- LATITUDE: 45.363349
- LONGITUDE: 122.635534

SITE SOIL CLASSIFICATION:
23C – CORNELIUS SILT LOAM, 8-15% SLOPES
30C – DELENA SILT LOAM, 3-12% SLOPES

RECEIVING WATER BODIES:
TANNER CREEK

PROJECT LOCATION:
3001 AND 3015 PARKER ROAD
WEST LINN, OR 97068

PROPERTY DESCRIPTION:
TAX LOT 100 AND 200, CLACKAMAS COUNTY ASSESSOR'S MAP 2 1E 25CC, LOCATED IN THE SOUTHWEST 1/4 OF THE SOUTHWEST 1/4 OF SECTION 25, TOWNSHIP 2 SOUTH, RANGE 1 EAST, WILLAMETTE MERIDIAN, CITY OF WEST LINN, CLACKAMAS COUNTY, OREGON

VERTICAL DATUM:
ELEVATIONS ARE DERIVED BY TRIMBLE VRS NOW NETWORK, AND CHECKED AGAINST NGS BENCHMARK NO QE1501, LOCATED ALONG HWY 99E AND THE JUNCTION OF INTERSTATE HWY 205
ELEVATION = 81.25 FEET (NAVD 88).

NOTE:
THE PERMITTEE IS REQUIRED TO MEET ALL THE CONDITIONS OF THE 1200CN PERMIT. THIS EROSION AND SEDIMENT CONTROL PLAN AND GENERAL CONDITIONS HAVE BEEN DEVELOPED TO FACILITATE COMPLIANCE WITH THE 1200CN PERMIT REQUIREMENTS. IN CASES OF DISCREPANCIES OR OMISSIONS, THE 1200CN PERMIT REQUIREMENTS SUPERCEDE REQUIREMENTS OF THIS PLAN.

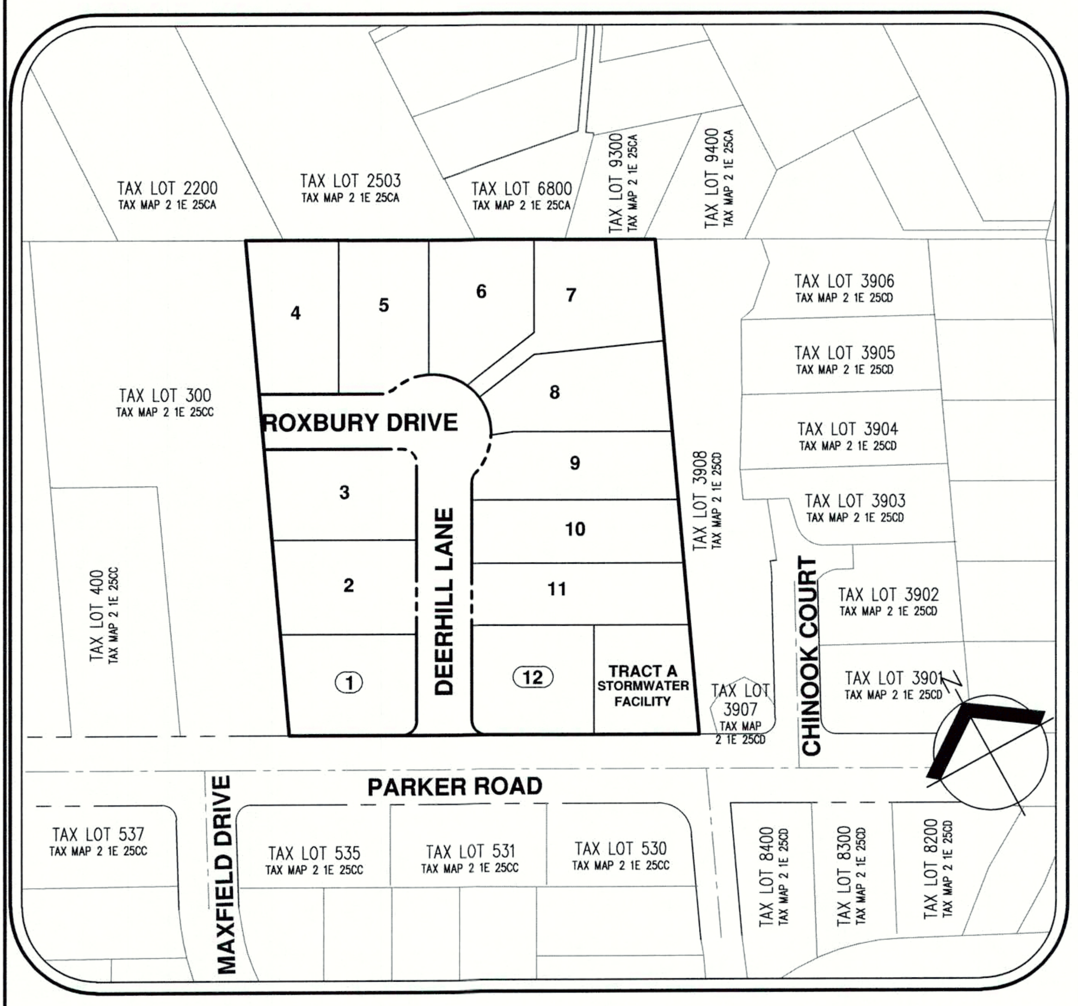

SITE MAP

SCALE: 1" = 100'

CIVIL ENGINEERING FIRM

AKS ENGINEERING & FORESTRY, LLC
CONTACT: MONTY HURLEY
12965 SW HERMAN ROAD, SUITE 100
TUALATIN, OR 97062
PH: 503-563-6151
FAX: 503-563-6152

OREGON UTILITY NOTIFICATION CENTER
Know what's below. Call before you dig.
811
DIG SAFELY OREGON 1-800-332-2344

NOTICE TO EXCAVATORS:

OREGON LAW REQUIRES YOU TO FOLLOW RULES ADOPTED BY THE OREGON UTILITY NOTIFICATION CENTER. THOSE RULES ARE SET FORTH IN OAR 952-001-0010 THROUGH OAR 952-001-0090. YOU MAY OBTAIN COPIES OF THESE RULES FROM THE CENTER BY CALLING 503-232-1987. IF YOU HAVE ANY QUESTIONS ABOUT THE RULES, YOU MAY CONTACT THE CENTER. YOU MUST NOTIFY THE CENTER AT LEAST TWO BUSINESS DAYS BUT NOT MORE THAN TEN BUSINESS DAYS, BEFORE COMMENCING AN EXCAVATION. CALL 503-246-6699.

STANDARD EROSION AND SEDIMENT CONTROL PLAN DRAWING NOTES:

1. HOLD A PRE-CONSTRUCTION MEETING OF PROJECT CONSTRUCTION PERSONNEL THAT INCLUDES THE INSPECTOR TO DISCUSS EROSION AND SEDIMENT CONTROL MEASURES AND CONSTRUCTION LIMITS. (SCHEDULE A.8.C.I.(3))
2. ALL INSPECTIONS MUST BE MADE IN ACCORDANCE WITH DEQ 1200-C PERMIT REQUIREMENTS. (SCHEDULE A.12.B AND SCHEDULE B.1)
3. INSPECTION LOGS MUST BE KEPT IN ACCORDANCE WITH DEQ'S 1200-C PERMIT REQUIREMENTS. (SCHEDULE B.1.C AND B.2)
4. RETAIN A COPY OF THE ESCP AND ALL REVISIONS ON SITE AND MAKE IT AVAILABLE ON REQUEST TO DEQ, AGENT, OR THE LOCAL MUNICIPALITY. DURING INACTIVE PERIODS OF GREATER THAN SEVEN (7) CONSECUTIVE CALENDAR DAYS, THE ABOVE RECORDS MUST BE RETAINED BY THE PERMIT REGISTRANT BUT DO NOT NEED TO BE AT THE CONSTRUCTION SITE. (SCHEDULE B.2.C)
5. ALL PERMIT REGISTRANTS MUST IMPLEMENT THE ESCP. FAILURE TO IMPLEMENT ANY OF THE CONTROL MEASURES OR PRACTICES DESCRIBED IN THE ESCP IS A VIOLATION OF THE PERMIT. (SCHEDULE A 8.A)
6. THE ESCP MUST BE ACCURATE AND REFLECT SITE CONDITIONS. (SCHEDULE A.12.C.I)
7. SUBMISSION OF ALL ESCP REVISIONS IS NOT REQUIRED. SUBMITTAL OF THE ESCP REVISIONS IS ONLY UNDER SPECIFIC CONDITIONS. SUBMIT ALL NECESSARY REVISION TO DEQ OR AGENT WITHIN 10 DAYS. (SCHEDULE A.12.C.IV. AND V)
8. PHASE CLEARING AND GRADING TO THE MAXIMUM EXTENT PRACTICAL TO PREVENT EXPOSED INACTIVE AREAS FROM BECOMING A SOURCE OF EROSION. (SCHEDULE A.7.A.III)
9. IDENTIFY, MARK, AND PROTECT (BY CONSTRUCTION FENCING OR OTHER MEANS) CRITICAL RIPARIAN AREAS AND VEGETATION INCLUDING IMPORTANT TREES AND ASSOCIATED ROOTING ZONES, AND VEGETATION AREAS TO BE PRESERVED. IDENTIFY VEGETATIVE BUFFER ZONES BETWEEN THE SITE AND SENSITIVE AREAS (E.G., WETLANDS), AND OTHER AREAS TO BE PRESERVED, ESPECIALLY IN PERIMETER AREAS. (SCHEDULE A.8.C.I.(1) AND (2))
10. PRESERVE EXISTING VEGETATION WHEN PRACTICAL AND RE-VEGETATE OPEN AREAS. RE-VEGETATE OPEN AREAS WHEN PRACTICABLE BEFORE AND AFTER GRADING OR CONSTRUCTION. IDENTIFY THE TYPE OF VEGETATIVE SEED MIX USED. (SCHEDULE A.7.A.V)
11. MAINTAIN AND DELINEATE ANY EXISTING NATURAL BUFFER WITHIN THE 50-FEET OF WATERS OF THE STATE. (SCHEDULE A.7.B.I.AND (2(A)(B))
12. INSTALL PERIMETER SEDIMENT CONTROL, INCLUDING STORM DRAIN INLET PROTECTION AS WELL AS ALL SEDIMENT BASINS, TRAPS, AND BARRIERS PRIOR TO LAND DISTURBANCE. (SCHEDULE A.8.C.I.(5))
13. CONTROL BOTH PEAK FLOW RATES AND TOTAL STORMWATER VOLUME, TO MINIMIZE EROSION AT OUTLETS AND DOWNSTREAM CHANNELS AND STREAMBANKS. (SCHEDULE A.7.C)
14. CONTROL SEDIMENT AS NEEDED ALONG THE SITE PERIMETER AND AT ALL OPERATIONAL INTERNAL STORM DRAIN INLETS AT ALL TIMES DURING CONSTRUCTION, BOTH INTERNALLY AND AT THE SITE BOUNDARY. (SCHEDULE A.7.D.I)
15. ESTABLISH CONCRETE TRUCK AND OTHER CONCRETE EQUIPMENT WASHOUT AREAS BEFORE BEGINNING CONCRETE WORK. (SCHEDULE A.8.C.I.(6))
16. APPLY TEMPORARY AND/OR PERMANENT SOIL STABILIZATION MEASURES IMMEDIATELY ON ALL DISTURBED AREAS AS GRADING PROGRESSES. TEMPORARY OR PERMANENT STABILIZATIONS MEASURES ARE NOT REQUIRED FOR AREAS THAT ARE INTENDED TO BE LEFT UNVEGETATED, SUCH AS DIRT ACCESS ROADS OR UTILITY POLE PADS.(SCHEDULE A.8.C.II.(3))
17. ESTABLISH MATERIAL AND WASTE STORAGE AREAS, AND OTHER NON-STORMWATER CONTROLS. (SCHEDULE A.8.C.I.(7))
18. PREVENT TRACKING OF SEDIMENT ONTO PUBLIC OR PRIVATE ROADS USING BMPS SUCH AS: CONSTRUCTION ENTRANCE, GRAVELED (OR PAVED) EXITS AND PARKING AREAS, GRAVEL ALL UNPAVED ROADS LOCATED ONSITE, OR USE AN EXIT TIRE WASH. THESE BMPS MUST BE IN PLACE PRIOR TO LAND- DISTURBING ACTIVITIES. (SCHEDULE A 7.D.II AND A.8.C.I(4))
19. WHEN TRUCKING SATURATED SOILS FROM THE SITE, EITHER USE WATER-TIGHT TRUCKS OR DRAIN LOADS ON SITE. (SCHEDULE A.7.D.II.(5))
20. CONTROL PROHIBITED DISCHARGES FROM LEAVING THE CONSTRUCTION SITE, I.E., CONCRETE WASH-OUT, WASTEWATER FROM CLEANOUT OF STUCCO, PAINT AND CURING COMPOUNDS. (SCHEDULE A.6)
21. USE BMPS TO PREVENT OR MINIMIZE STORMWATER EXPOSURE TO POLLUTANTS FROM SPILLS; VEHICLE AND EQUIPMENT FUELING, MAINTENANCE, AND STORAGE; OTHER CLEANING AND MAINTENANCE ACTIVITIES; AND WASTE HANDLING ACTIVITIES. THESE POLLUTANTS INCLUDE FUEL, HYDRAULIC FLUID, AND OTHER OILS FROM VEHICLES AND MACHINERY, AS WELL AS DEBRIS, FERTILIZER, PESTICIDES AND HERBICIDES, PAINTS, SOLVENTS, CURING COMPOUNDS AND ADHESIVES FROM CONSTRUCTION OPERATIONS. (SCHEDULE A.7.E.I.(2))
22. IMPLEMENT THE FOLLOWING BMPS WHEN APPLICABLE: WRITTEN SPILL PREVENTION AND RESPONSE PROCEDURES, EMPLOYEE TRAINING ON SPILL PREVENTION AND PROPER DISPOSAL PROCEDURES, SPILL KITS IN ALL VEHICLES, REGULAR MAINTENANCE SCHEDULE FOR VEHICLES AND MACHINERY, MATERIAL DELIVERY AND STORAGE CONTROLS, TRAINING AND SIGNAGE, AND COVERED STORAGE AREAS FOR WASTE AND SUPPLIES. (SCHEDULE A. 7.E.III.)
23. USE WATER, SOIL-BINDING AGENT OR OTHER DUST CONTROL TECHNIQUE AS NEEDED TO AVOID WIND-BLOWN SOIL. (SCHEDULE A 7.A.IV)
24. THE APPLICATION RATE OF FERTILIZERS USED TO REESTABLISH VEGETATION MUST FOLLOW MANUFACTURER'S RECOMMENDATIONS TO MINIMIZE NUTRIENT RELEASES TO SURFACE WATERS. EXERCISE CAUTION WHEN USING TIME-RELEASE FERTILIZERS WITHIN ANY WATERWAY RIPARIAN ZONE. (SCHEDULE A.9.B.III)
25. IF AN ACTIVE TREATMENT SYSTEM (FOR EXAMPLE, ELECTRO-COAGULATION, FLOCCULATION, FILTRATION, ETC.) FOR SEDIMENT OR OTHER POLLUTANT REMOVAL IS EMPLOYED, SUBMIT AN OPERATION AND MAINTENANCE PLAN (INCLUDING SYSTEM SCHEMATIC, LOCATION OF SYSTEM, LOCATION OF INLET, LOCATION OF DISCHARGE, DISCHARGE DISPERSION DEVICE DESIGN, AND A SAMPLING PLAN AND FREQUENCY) BEFORE OPERATING THE TREATMENT SYSTEM. OBTAIN PLAN APPROVAL BEFORE OPERATING THE TREATMENT SYSTEM. OPERATE AND MAINTAIN THE TREATMENT SYSTEM ACCORDING TO MANUFACTURER'S SPECIFICATIONS. (SCHEDULE A.9.D)
26. TEMPORARILY STABILIZE SOILS AT THE END OF THE SHIFT BEFORE HOLIDAYS AND WEEKENDS, IF NEEDED. THE REGISTRANT IS RESPONSIBLE FOR ENSURING THAT SOILS ARE STABLE DURING RAIN EVENTS AT ALL TIMES OF THE YEAR. (SCHEDULE A 7.B)
27. AS NEEDED BASED ON WEATHER CONDITIONS, AT THE END OF EACH WORKDAY SOIL STOCKPILES MUST BE STABILIZED OR COVERED, OR OTHER BMPS MUST BE IMPLEMENTED TO PREVENT DISCHARGES TO SURFACE WATERS OR CONVEYANCE SYSTEMS LEADING TO SURFACE WATERS. (SCHEDULE A 7.E.II.(2))
28. CONSTRUCTION ACTIVITIES MUST AVOID OR MINIMIZE EXCAVATION AND BARE GROUND ACTIVITIES DURING WET WEATHER. (SCHEDULE A.7.A.I)
29. SEDIMENT FENCE: REMOVE TRAPPED SEDIMENT BEFORE IT REACHES ONE THIRD OF THE ABOVE GROUND FENCE HEIGHT AND BEFORE FENCE REMOVAL. (SCHEDULE A.9.C.I)
30. OTHER SEDIMENT BARRIERS (SUCH AS BIOBAGS): REMOVE SEDIMENT BEFORE IT REACHES TWO INCHES DEPTH ABOVE GROUND HEIGHT AND BEFORE BMP REMOVAL. (SCHEDULE A.9.C.I)
31. CATCH BASINS: CLEAN BEFORE RETENTION CAPACITY HAS BEEN REDUCED BY FIFTY PERCENT. SEDIMENT BASINS AND SEDIMENT TRAPS: REMOVE TRAPPED SEDIMENTS BEFORE DESIGN CAPACITY HAS BEEN REDUCED BY FIFTY PERCENT AND AT COMPLETION OF PROJECT. (SCHEDULE A.9.C.III & IV)
32. WITHIN 24 HOURS, SIGNIFICANT SEDIMENT THAT HAS LEFT THE CONSTRUCTION SITE, MUST BE REMEDIATED. INVESTIGATE THE CAUSE OF THE SEDIMENT RELEASE AND IMPLEMENT STEPS TO PREVENT A RECURRENCE OF THE DISCHARGE WITHIN THE SAME 24 HOURS. ANY IN-STREAM CLEAN-UP OF SEDIMENT SHALL BE PERFORMED ACCORDING TO THE OREGON DIVISION OF STATE LANDS REQUIRED TIMEFRAME. (SCHEDULE A.9.B.I)
33. THE INTENTIONAL WASHING OF SEDIMENT INTO STORM SEWERS OR DRAINAGE WAYS MUST NOT OCCUR. VACUUMING OR DRY SWEEPING AND MATERIAL PICKUP MUST BE USED TO CLEANUP RELEASED SEDIMENTS. (SCHEDULE A.9.B.II)
34. THE ENTIRE SITE MUST BE TEMPORARILY STABILIZED USING VEGETATION OR A HEAVY MULCH LAYER, TEMPORARY SEEDING, OR OTHER METHOD SHOULD ALL CONSTRUCTION ACTIVITIES CEASE FOR 30 DAYS OR MORE. (SCHEDULE A.7.F.I)
35. PROVIDE TEMPORARY STABILIZATION FOR THAT PORTION OF THE SITE WHERE CONSTRUCTION ACTIVITIES CEASE FOR 14 DAYS OR MORE WITH A COVERING OF BLOWN STRAW AND A TACKIFIER, LOOSE STRAW, OR AN ADEQUATE COVERING OF COMPOST MULCH UNTIL WORK RESUMES ON THAT PORTION OF THE SITE. (SCHEDULE A.7.F.II)
36. DO NOT REMOVE TEMPORARY SEDIMENT CONTROL PRACTICES UNTIL PERMANENT VEGETATION OR OTHER COVER OF EXPOSED AREAS IS ESTABLISHED. ONCE CONSTRUCTION IS COMPLETE AND THE SITE IS STABILIZED, ALL TEMPORARY EROSION CONTROLS AND RETAINED SOILS MUST BE REMOVED AND DISPOSED OF PROPERLY, UNLESS DOING SO CONFLICTS WITH LOCAL REQUIREMENTS. (SCHEDULE A.8.C.III(1) AND D.3.C.II AND III)

LOCAL AGENCY-SPECIFIC EROSION CONTROL NOTES:

1. IF VEGETATIVE SEED MIXES ARE SPECIFIED, SEEDING MUST TAKE PLACE NO LATER THAN SEPTEMBER 1; THE TYPE AND PERCENTAGES OF SEED IN THE MIX MUST BE IDENTIFIED ON THE PLANS.
2. ALL PUMPING OF SEDIMENT LADEN WATER SHALL BE DISCHARGED OVER AN UNDISTURBED, PREFERABLY VEGETATED AREA, AND THROUGH A SEDIMENT CONTROL BMP I.E. (FILTER BAG).
3. ALL EXPOSED SOILS MUST BE COVERED DURING THE WET WEATHER PERIOD, OCTOBER 01 – MAY 31.

BMP MATRIX FOR CONSTRUCTION PHASES

REFER TO DEQ GUIDANCE MANUAL AND CLACKAMAS COUNTY EROSION PREVENTION AND SEDIMENT CONTROL MANUAL FOR A COMPREHENSIVE LIST OF AVAILABLE BMP'S.

BMP'S	YEAR:	19	19	19	19	19	19	19	19	20
	MONTH:	5	6	7	8	9	10	11	12	1
PIPE SLOPE DRAINS										
ENERGY DISSIPATERS										
TEMPORARY DIVERSION DIKES										
CHECK DAMS										
TEMPORARY SEEDING AND PLANTING				X	X	X	X			
PERMANENT SEEDING AND PLANTING						X	X	X	X	X
MYCORRHIZAE/ BIOFERTILIZERS										
STRAW MULCH				X	X	X	X	X	X	X
CONSTRUCTION ENTRANCE		X	X	X	X	X				
COMPOST BLANKETS										
COMPOST SOCKS		X	X	X	X	X	X	X	X	X
COMPOST BERM										
SOIL TACKIFIERS										
SODDING VEGETATIVE BUFFER STRIPS										
PLASTIC SHEETING		X	X	X	X	X				
SEDIMENT FENCING *		X	X	X	X	X	X	X	X	X
EROSION CONTROL BLANKETS AND MATS (COCONUT FIBER)				X	X	X	X	X	X	X
EARTH DIKES (STABILIZED)										
DRAINAGE SWALES										
ROCK OUTLET PROTECTION										
SEDIMENT TRAP										
STRAW WATTLES (LOOSE COMPACTION RICE STRAW)				X	X	X				
STORM DRAIN INLET PROTECTION*		X	X	X	X	X	X	X	X	X
TEMPORARY OR PERMANENT SEDIMENTATION BASINS										
UNPAVED ROADS GRAVELED OR OTHER BMP ON THE ROAD										
DEWATERING (TREATMENT LOCATION, SCHEMATIC, AND SAMPLING PLAN REQUIRED)										
PAVING OPERATION CONTROLS				X	X	X				
CONCRETE TRUCK WASHOUT					X	X	X	X	X	X
NATURAL BUFFER ENCROACHMENT		X	X	X	X	X	X	X	X	X

* SIGNIFIES BMP THAT WILL BE INSTALLED PRIOR TO ANY GROUND DISTURBING ACTIVITY.

RATIONALE STATEMENT

A COMPREHENSIVE LIST OF AVAILABLE BEST MANAGEMENT PRACTICES (BMP) OPTIONS BASED ON DEQ's GUIDANCE MANUAL HAS BEEN REVIEWED TO COMPLETE THIS EROSION AND SEDIMENT CONTROL PLAN. SOME OF THE ABOVE LISTED BMP's WERE NOT CHOSEN BECAUSE THEY WERE DETERMINED TO NOT EFFECTIVELY MANAGE EROSION PREVENTION AND SEDIMENT CONTROL FOR THIS PROJECT BASED ON SPECIFIC SITE CONDITIONS, INCLUDING SOIL CONDITIONS TOPOGRAPHIC CONSTRAINTS, ACCESSIBILITY TO THE SITE, AND OTHER RELATED CONDITIONS, AS THE PROJECT PROGRESSES AND THERE IS A NEED TO REVISE THE ESC PLAN, AN ACTION PLAN WILL BE SUBMITTED.

INITIAL

INSPECTION FREQUENCY		
	SITE CONDITION	MINIMUM FREQUENCY
1.	ACTIVE PERIOD	DAILY WHEN STORMWATER RUNOFF, INCLUDING RUNOFF FROM SNOW MELT, IS OCCURRING. AT LEAST ONCE EVERY 14 DAYS, REGARDLESS OF WHETHER STORMWATER RUNOFF IS OCCURRING.
2.	PRIOR TO THE SITE BECOMING INACTIVE OR IN ANTICIPATION OF SITE INACCESSIBILITY.	ONCE TO ENSURE THAT EROSION AND SEDIMENT CONTROL MEASURES ARE IN WORKING ORDER. ANY NECESSARY MAINTENANCE AND REPAIR MUST BE MADE PRIOR TO LEAVING THE SITE.
3.	INACTIVE PERIODS GREATER THAN FOURTEEN (14) CONSECUTIVE CALENDAR DAYS.	ONCE EVERY MONTH.
4.	PERIODS DURING WHICH THE SITE IS INACCESSIBLE DUE TO INCLEMENT WEATHER.	IF PRACTICAL, INSPECTIONS MUST OCCUR DAILY AT A RELEVANT AND ACCESSIBLE DISCHARGE POINT OR DOWNSTREAM LOCATION.
5.	PERIODS DURING WHICH DISCHARGE IS UNLIKELY DUE TO FROZEN CONDITIONS.	MONTHLY. RESUME MONITORING IMMEDIATELY UPON MELT, OR WHEN WEATHER CONDITIONS MAKE DISCHARGES LIKELY.

* HOLD A PRE-CONSTRUCTION MEETING OF PROJECT CONSTRUCTION PERSONNEL THAT INCLUDES THE INSPECTOR TO DISCUSS EROSION AND SEDIMENT CONTROL MEASURES AND CONSTRUCTION LIMITS.
* ALL INSPECTIONS MUST BE MADE IN ACCORDANCE WITH DEQ 1200-C PERMIT REQUIREMENTS.
* INSPECTION LOGS MUST BE KEPT IN ACCORDANCE WITH DEQ'S 1200-C PERMIT REQUIREMENTS.
* REVISIONS TO APPROVED ESC PLAN OR INSPECTOR MUST BE SUBMITTED TO DEQ OR AGENT IN ACCORDANCE WITH CURRENT 1200-C PERMIT.

PERMITTEE'S SITE INSPECTOR NATHAN MCCARTY (CESCL #2016-009)

COMPANY/AGENCY: AKS ENGINEERING & FORESTRY, LLC
PHONE: 503-563-6151
FAX: 503-563-6152
E-MAIL: MCCARTYN@AKS-ENG.COM
DESCRIPTION OF EXPERIENCE: 4 YEARS EXPERIENCE INSPECTING EROSION AND SEDIMENT CONTROL MEASURES.

AKS ENGINEERING & FORESTRY, LLC
12965 SW HERMAN RD STE 100
TUALATIN, OR 97062
P: 503.563.6151
F: 503.563.6152
aks-eng.com

AKS — ENGINEERING · SURVEYING · NATURAL RESOURCES
FORESTRY · PLANNING · LANDSCAPE ARCHITECTURE

KNOLLCREST SUBDIVISION
WEST LINN OREGON
TAX LOTS 100 & 200 CLACKAMAS COUNTY TAX MAP 2 1E 25CC

GRADING, EROSION AND SEDIMENT CONTROL COVER SHEET

DESIGNED BY: CLR
DRAWN BY: NSL/AMF
CHECKED BY: RSW
SCALE: AS NOTED
DATE: 07/30/2018

REGISTERED PROFESSIONAL ENGINEER 58542PE OREGON JULY 9, 2002 MONTGOMERY B. HURLEY
RENEWAL DATE: 6/30/19

REVISIONS

JOB NUMBER 5132

SHEET C050

AKS DRAWING FILE: 5132 C000 COVER.DWG | LAYOUT: C050

PRE-CONSTRUCTION, CLEARING, AND DEMOLITION NOTES

1. ALL BASE ESC MEASURES (INLET PROTECTION, PERIMETER SEDIMENT CONTROL, GRAVEL CONSTRUCTION ENTRANCES, ETC.) MUST BE IN PLACE, FUNCTIONAL, AND APPROVED IN AN INITIAL INSPECTION, PRIOR TO COMMENCEMENT OF CONSTRUCTION ACTIVITIES.
2. SEDIMENT BARRIERS APPROVED FOR USE INCLUDE SEDIMENT FENCE, STRAW WATTLES, OR OTHER APPROVED MATERIALS.
3. SENSITIVE RESOURCES INCLUDING, BUT NOT LIMITED TO, TREES, WETLANDS, AND RIPARIAN PROTECTION AREAS SHALL BE CLEARLY DELINEATED WITH ORANGE CONSTRUCTION FENCING OR CHAIN LINK FENCING IN A MANNER THAT IS CLEARLY VISIBLE TO ANYONE IN THE AREA. NO ACTIVITIES ARE PERMITTED TO OCCUR BEYOND THE CONSTRUCTION BARRIER.
4. CONSTRUCTION ENTRANCES SHALL BE INSTALLED AT THE BEGINNING OF CONSTRUCTION AND MAINTAINED FOR THE DURATION OF THE PROJECT. ADDITIONAL MEASURES INCLUDING, BUT NOT LIMITED TO, STREET SWEEPING, AND VACUUMING, MAY BE REQUIRED TO INSURE THAT ALL PAVED AREAS ARE KEPT CLEAN FOR THE DURATION OF THE PROJECT.
5. RUN-ON AND RUN-OFF CONTROLS SHALL BE IN PLACE AND FUNCTIONING PRIOR TO BEGINNING SUBSTANTIAL CONSTRUCTION ACTIVITIES.

WET WEATHER MEASURES, SEEDING NOTES, AND SPECIFICATIONS

1. HYDROMULCH (TACKIFIED WOOD-FIBER MULCH) SHALL BE APPLIED TO THE PROJECT SITE WITH GRASS SEED AT A RATE OF 2000 LB./ACRE. SLOPE MATTING (NORTH AMERICAN GREEN S150, OR APPROVED EQUAL – ALTERNATE SLOPE MATTING MATERIALS MAY BE USED IF APPROVED BY THE PROJECT ENGINEER) SHALL BE USED ALONG WITH THE HYDROMULCH ON SLOPES 5H:1V OR STEEPER. THE METHODS USED AND APPLICATION RATE WILL BE PER THE SEED SUPPLIER'S RECOMMENDATIONS.
2. DRY, LOOSE, WEED-FREE STRAW USED AS MULCH SHALL BE APPLIED AT DOUBLE THE HYDROMULCH APPLICATION REQUIREMENT (4000 LB./ACRE). ANCHOR STRAW BY WORKING BY HAND OR WITH EQUIPMENT (ROLLERS, CLEAT TRACKS, ETC.). IF THIS IS UTILIZED AS MULCH, IT SHALL BE SPREAD UNIFORMLY IMMEDIATELY FOLLOWING SEEDING.
3. SEED USED FOR TEMPORARY OR PERMANENT SEEDING SHALL BE COMPOSED OF ONE OF THE FOLLOWING MIXTURES, UNLESS OTHERWISE AUTHORIZED:
   A. DWARF GRASS MIX (MIN. 150 LB./AC.)
      1. DWARF PERENNIAL RYEGRASS (80% BY WEIGHT)
      2. CREEPING RED FESCUE (20% BY WEIGHT)
4. SLOPE TO RECEIVE TEMPORARY OR PERMANENT SEEDING SHALL HAVE THE SURFACE ROUGHENED BY MEANS OF TRACK-WALKING OR THE USE OF OTHER APPROVED IMPLEMENTS. SURFACE ROUGHENING IMPROVES SEED BEDDING AND REDUCES RUN-OFF VELOCITY.
5. IN ACCORDANCE WITH SUPPLIER'S RECOMMENDATIONS, DEVELOPED AREAS WITHIN 50 FEET OF WATER BODIES AND WETLANDS MUST USE A NON-PHOSPHOROUS FERTILIZER.
6. SEEDING SHALL BE SUPPLIED WITH ADEQUATE MOISTURE TO ESTABLISH GRASS. SUPPLY WATER AS NEEDED, ESPECIALLY IN UNUSUALLY HOT OR DRY WEATHER CONDITIONS OR ON ADVERSE SITES. WATER APPLICATION RATES SHOULD BE CONTROLLED TO PROVIDE ADEQUATE MOISTURE WITHOUT CAUSING RUNOFF.
7. AREAS WHICH FAIL TO ESTABLISH GRASS COVER ADEQUATE TO PREVENT EROSION SHALL BE RESEEDED AS SOON AS SUCH AREAS ARE IDENTIFIED, AND ALL APPROPRIATE MEASURES SHALL BE TAKEN TO ESTABLISH ADEQUATE COVER.
8. CONTRACTOR SHALL TAKE EVERY PRECAUTION DURING CONSTRUCTION TO KEEP WATER FROM ADVERSELY AFFECTING ALL STRUCTURES, INCLUDING RETAINING WALLS, SLOPES, ETC. CONSULT WITH THE PROJECT ENGINEER FOR SPECIFIC WET WEATHER MEASURES IF UNSURE OF PROPER TREATMENT.
9. SEED MIX SHALL BE INSTALLED ON EXPOSED SOIL AREAS ONCE GRADING ACTIVITY HAS BEEN COMPLETED ON EACH PORTION OF THE SITE PRIOR TO PROCEEDING TO ANOTHER AREA OF THE SITE.
10. CONTRACTOR MAY BE REQUIRED TO RESEED SOME AREAS DUE TO FURTHER DISTURBANCE AFTER PLANT MATERIAL HAS BEEN INSTALLED ON EXPOSED SOIL AREAS. CONTRACTOR WILL BE RESPONSIBLE FOR PROVIDING A FULL STAND OF GRASS PRIOR TO FINAL APPROVAL.
11. SEED MULCHING/SEEDING SHALL BE APPLIED TO ALL EXPOSED SOIL AREAS.

GRADING, STREET, AND UTILITY EROSION AND SEDIMENT CONSTRUCTION NOTES

1. LONG TERM SLOPE STABILIZATION MEASURES SHALL INCLUDE THE ESTABLISHMENT OF PERMANENT VEGETATIVE COVER VIA SEEDING WITH APPROVED MIX AND APPLICATION RATE.
2. TEMPORARY SLOPE STABILIZATION MEASURES SHALL INCLUDE: COVERING EXPOSED SOIL WITH PLASTIC SHEETING, STRAW MULCHING, OR OTHER APPROVED MEASURES.
3. STOCKPILED SOIL OR STRIPPINGS SHALL BE PLACED IN A STABLE LOCATION AND CONFIGURATION. STOCKPILES SHALL BE COVERED WITH PLASTIC SHEETING AT THE END OF EACH WORKDAY. SEDIMENT FENCE IS REQUIRED AROUND THE PERIMETER OF THE STOCKPILE.
4. EXPOSED CUT OR FILL AREAS SHALL BE STABILIZED THROUGH THE USE OF TEMPORARY SEEDING AND MULCHING, EROSION CONTROL BLANKETS OR MATS, MID-SLOPE SEDIMENT FENCES OR WATTLES, OR OTHER APPROPRIATE MEASURES. SLOPES EXCEEDING 25% MAY REQUIRE ADDITIONAL EROSION CONTROL MEASURES.
5. AREAS SUBJECT TO WIND EROSION SHALL USE APPROPRIATE DUST CONTROL MEASURES INCLUDING THE APPLICATION OF A FINE SPRAY OF WATER, PLASTIC SHEETING, STRAW MULCHING, OR OTHER APPROVED MEASURES.
6. CONSTRUCTION ENTRANCES SHALL BE INSTALLED AT THE BEGINNING OF CONSTRUCTION AND MAINTAINED FOR THE DURATION OF THE PROJECT. ADDITIONAL MEASURES INCLUDING, BUT NOT LIMITED TO, TIRE WASHES, STREET SWEEPING, AND VACUUMING MAY BE REQUIRED TO ENSURE THAT ALL PAVED AREAS ARE KEPT CLEAN FOR THE DURATION OF THE PROJECT.
7. ACTIVE INLETS TO STORM WATER SYSTEMS SHALL BE PROTECTED THROUGH THE USE OF APPROVED INLET PROTECTION MEASURES. ALL INLET PROTECTION MEASURES ARE TO BE REGULARLY INSPECTED AND MAINTAINED AS NEEDED.
8. SATURATED MATERIALS THAT ARE HAULED OFF-SITE MUST BE TRANSPORTED IN WATER-TIGHT TRUCKS TO ELIMINATE SPILLAGE OF SEDIMENT AND SEDIMENT-LADEN WATER.
9. AN AREA SHALL BE PROVIDED FOR THE WASHING OUT OF CONCRETE TRUCKS IN A LOCATION THAT DOES NOT PROVIDE RUN-OFF THAT CAN ENTER THE STORM WATER SYSTEM. IF THE CONCRETE WASH-OUT AREA CAN NOT BE CONSTRUCTED GREATER THAN 50' FROM ANY DISCHARGE POINT, SECONDARY MEASURES SUCH AS BERMS OR TEMPORARY SETTLING PITS MAY BE REQUIRED. THE WASH-OUT SHALL BE LOCATED WITHIN SIX FEET OF TRUCK ACCESS AND BE CLEANED WHEN IT REACHES 50% OF THE CAPACITY.
10. SWEEPINGS FROM EXPOSED AGGREGATE CONCRETE SHALL NOT BE TRANSFERRED TO THE STORMWATER SYSTEM. SWEEPINGS SHALL BE PICKED UP AND DISPOSED IN THE TRASH.
11. AVOID PAVING IN WET WEATHER WHEN PAVING CHEMICALS CAN RUN-OFF INTO THE STORMWATER SYSTEM.
12. USE BMPs SUCH AS INLET PROTECTION TO PREVENT RUN-OFF FROM REACHING DISCHARGE POINTS.
13. COVER CATCH BASINS, MANHOLES, AND OTHER DISCHARGE POINTS WHEN APPLYING SEAL COAT, TACK COAT, ETC. TO PREVENT INTRODUCING THESE MATERIALS TO THE STORM WATER SYSTEM.
14. SLOPE MATTING IS REQUIRED ON ALL SLOPES GRATER THAN 5H:1V. CONTRACTOR SHALL SUBMIT SLOPE MATTING MATERIAL SPECIFICATIONS TO PROJECT ENGINEER FOR APPROVAL PRIOR TO PURCHASING MATERIALS.

OTHER MISCELLANEOUS BMP NOTES

TO PREVENT ILLICIT CONNECTION AND ILLEGAL DISCHARGE:

1. INSPECT SITE BEFORE BEGINNING THE JOB FOR EVIDENCE OF ILLICIT CONNECTIONS OR ILLEGAL DUMPING OR DISCHARGES.
2. INSPECT SITE REGULARLY DURING PROJECT EXECUTION FOR EVIDENCE OF ILLICIT CONNECTIONS OR ILLEGAL DUMPING OR DISCHARGES.
3. OBSERVE SITE PERIMETER FOR EVIDENCE OR POTENTIAL OF ILLICITLY DISCHARGED OR ILLEGALLY DUMPED MATERIAL WHICH MAY ENTER THE JOB SITE.
4. IDENTIFICATION OF ILLICIT CONNECTIONS AND ILLEGAL DUMPING OR DISCHARGES:
   A. SOLIDS: LOOK FOR DEBRIS, OR RUBBISH PILES. SOLID WASTE DUMPING OFTEN OCCURS ON ROADWAYS WITH LIGHT TRAFFIC LOADS OR IN AREAS NOT EASILY VISIBLE FROM THE TRAVELED WAY.
   B. LIQUIDS:
      1. VISIBLE SIGNS OF STAINING OR UNUSUAL COLORS TO THE PAVEMENT OR SURROUNDING ADJACENT SOILS.
      2. DISCOLORATION OR OILY SUBSTANCES IN THE WATER OR STAINS AND RESIDUES DETAINED WITH DITCHES, CHANNELS OR DRAINAGE BOXES.
      3. PUNGENT ODORS COMING FROM THE DRAINAGE SYSTEMS.
      4. ABNORMAL WATER FLOW DURING THE DRY WEATHER SEASON.
      5. URBAN AREAS – EVIDENCE OF ILLICIT CONNECTIONS OR ILLEGAL DISCHARGES IS TYPICALLY DETECTED AT THE STORM DRAIN OUTFALL LOCATIONS OR AT THE MANHOLES. SIGNS OF AN ILLICIT CONNECTION OR ILLEGAL DISCHARGE CAN INCLUDE:
         * – ABNORMAL WATER FLOW DURING THE DRY WEATHER SEASON.
         * – UNUSUAL FLOWS IN SUB-DRAIN SYSTEMS USED FOR DEWATERING.
         * – PUNGENT ODORS COMING FROM THE DRAINAGE SYSTEMS.
         * – DISCOLORATION OR OILY SUBSTANCES IN THE WATER OR STAINS AND RESIDUES DETAINED WITHIN DITCHES.
         * – EXCESSIVE SEDIMENT DEPOSITS, PARTICULARLY ADJACENT TO OR NEAR ACTIVE OFF-SITE CONSTRUCTION.
5. NOTIFY THE PROJECT SUPERINTENDENT OF ANY ILLICIT CONNECTIONS, DUMPINGS, OR DISCHARGES AT THE TIME OF DISCOVERY.
6. VEHICLES AND EQUIPMENT SHOULD BE WASHED OFF SITE AT A CONTROLLED WASH FACILITY WHEN AT ALL POSSIBLE.
7. USE "DRY CLEANING METHODS" SUCH AS WIPING DOWN WHENEVER POSSIBLE RATHER THAN WATER WASHING VEHICLES ON SITE.
8. IF CLEANING MUST BE CONDUCTED ON-SITE, IT SHALL BE CONDUCTED IN A DEDICATED AREA WITH THE FOLLOWING CHARACTERISTICS:
   * – LOCATED AWAY FROM THE STORM DRAIN INLETS, DRAINAGE FACILITIES, OR WATERCOURSES.
   * – PAVED WITH CONCRETE OR ASPHALT, OR STABILIZED WITH AN AGGREGATE BASE.
   * – BERMED TO CONTAIN WASH WATERS AND TO PREVENT RUN-ON AND RUNOFF.
   * – CONFIGURED WASH AREA WITH A SUMP TO ALLOW COLLECTION AND DISPOSAL OF WASH WATER.
   * – DISCHARGE WASH WATER TO A SANITARY OR PROCESS WASTE SEWER (WHERE PERMITTED), OR TO A DEAD END SUMP. WASH WATERS SHALL NOT BE DISCHARGED TO STORM DRAINS OR WATERCOURSES.
   * – USED ONLY WHEN NECESSARY.
9. WHEN CLEANING VEHICLES OR EQUIPMENT WITH WATER:
   * – USE AS LITTLE WATER AS POSSIBLE. CONSIDER USING A HIGH PRESSURE SPRAYER AND USE THE POSITIVE SHUTOFF VALVE.
   * – DO NOT USE SOLVENTS OR DETERGENTS TO CLEAN VEHICLES OR EQUIPMENT ON SITE.
   * – DO NOT USE STEAM CLEANING ON SITE.
10. INSPECT AND CLEAN WORK AREAS REGULARLY TO LIMIT WIND BLOWN DEBRIS AND POLLUTANTS TRANSPORTED BY STORMWATER.

TO REUSE AND RECYCLE CONSTRUCTION WASTES:

1. USE TRENCH SPOILS AND CUT AREA SOIL FOR FILL. UNSUITABLE AND EXCESS MATERIAL SHALL BE HAULED OFF SITE TO AN APPROVED LOCATION. IMPORTED FILL MATERIAL SHALL BE APPROVED BY THE PROJECT'S GEOTECHNICAL ENGINEER.

DEMOLITION GENERAL NOTES

1. PRIOR TO STARTING DEMOLITION OPERATIONS, THE CONTRACTOR SHALL APPLY FOR AND OBTAIN ALL NECESSARY PERMITS REQUIRED BY FEDERAL, STATE, CITY, COUNTY, AND LOCAL LAWS, CODES, AND REGULATIONS. DEMOLITION PERMIT SHALL BE REQUIRED THROUGH THE BUILDING DIVISION.
2. THE CONTRACTOR SHALL PROVIDE ALL THE "MEANS AND METHODS" NECESSARY TO PREVENT MOVEMENT, SETTLEMENT, OR COLLAPSE OF EXISTING STRUCTURES AND/OR IMPROVEMENTS TO REMAIN ON OR OFF SITE. THE CONTRACTOR IS RESPONSIBLE FOR ANY DAMAGE TO EXISTING STRUCTURES AND/OR IMPROVEMENTS TO REMAIN AND SHALL RESTORE ANY DAMAGE TO THE PRE-DEMOLITION CONDITION OR BETTER USING NEW MATERIALS. ANY REPAIRS REQUIRED SHALL BE PERFORMED AT THE CONTRACTOR'S SOLE COST AND EXPENSE.
3. CONTRACTOR SHALL BE REQUIRED TO SECURE ALL NECESSARY PERMITS AND APPROVALS FOR ALL OFF SITE MATERIAL SOURCES AND DISPOSAL FACILITIES. CONTRACTOR SHALL SUPPLY A COPY OF APPROVALS TO OWNER'S REPRESENTATIVE PRIOR TO INITIATING WORK.
4. CONTRACTOR SHALL INSTALL EROSION CONTROL MEASURES IN CONFORMANCE WITH THE EROSION CONTROL PLAN, NOTES, AND DETAILS PRIOR TO STARTING DEMOLITION OPERATIONS.
5. THE LOCATION OF ALL UTILITIES SHALL BE MARKED IN THE FIELD PRIOR TO DEMOLITION. CONTRACTOR SHALL PROTECT AND MAINTAIN IN A SAFE AND OPERABLE CONDITION ALL UTILITIES INDICATED TO REMAIN, AND PREVENT INTERRUPTION OF EXISTING UTILITY SERVICES EXCEPT WHEN AUTHORIZED IN WRITING BY THE AUTHORITIES HAVING JURISDICTION. CONTRACTOR SHALL PROVIDE TEMPORARY SERVICES, ACCEPTABLE TO GOVERNING AUTHORITIES AND OWNER'S REPRESENTATIVE, FOR BUILDING(S) TO REMAIN AS REQUIRED DURING INTERRUPTIONS TO EXISTING UTILITY SERVICES.
6. DEMOLITION ACTIVITIES AND EQUIPMENT SHALL NOT USE AREAS OUTSIDE THE PROJECT LIMITS WITHOUT WRITTEN PERMISSION FROM THE OWNER'S REPRESENTATIVE AND/OR GOVERNMENTAL AGENCIES HAVING JURISDICTION IF APPLICABLE.
7. THE CONTRACTOR SHALL KEEP ALL STREETS AND PUBLIC RIGHT-OF-WAYS CLEAN OF MUD, DIRT, AND DEMOLITION DEBRIS. THE CONTRACTOR SHALL MONITOR THE HAULING OF DEBRIS TO ENSURE THAT ANY SPILLAGE FROM TRUCKS IS PROMPTLY AND COMPLETELY REMOVED AND CLEANED UP. IF REQUIRED AND/OR NECESSARY, THE CONTRACTOR SHALL COVER ALL HAUL VEHICLES.
8. CONTRACTOR SHALL CONDUCT DEMOLITION ACTIVITIES IN SUCH A MANNER TO ENSURE MINIMUM INTERFERENCE WITH ROADS, STREETS, SIDEWALKS, WALKWAYS, AND OTHER ADJACENT FACILITIES. IF APPLICABLE STREET CLOSURE PERMITS MUST BE RECEIVED FROM THE APPROPRIATE GOVERNMENTAL AUTHORITY PRIOR TO THE COMMENCEMENT OF ANY STREET OPENING OR DEMOLITION ACTIVITIES IN THE RIGHT-OF-WAY.
9. CONTRACTOR SHALL CLEAN ADJACENT STRUCTURES AND IMPROVEMENTS OF DUST, DIRT, AND DEBRIS CAUSED BY DEMOLITION OPERATIONS. RETURN ADJACENT AREAS TO CONDITIONS EXISTING PRIOR TO THE START OF THE WORK.
10. DEBRIS SHALL NOT BE BURIED OR STOCKPILED ON THE PROPERTY. ALL DEMOLITION DEBRIS AND MATERIALS SHALL BE DISPOSED OF AT OFFSITE LOCATIONS IN ACCORDANCE WITH ALL MUNICIPAL, COUNTY, STATE, AND FEDERAL LAWS, CODES, AND REGULATIONS. THE CONTRACTOR SHALL MAINTAIN RECORDS TO DEMONSTRATE PROPER DISPOSAL ACTIVITIES AND SHALL PROVIDE A COPY TO THE OWNER OR OWNER'S REPRESENTATIVE UPON REQUEST. CONTRACTOR SHALL COORDINATE AND PAY ALL COSTS INCLUDING DISPOSAL CHARGES.
11. PAVEMENT SHALL BE SAW CUT IN STRAIGHT LINES, AND EXCEPT FOR EDGE OF BUTT JOINTS, SHALL EXTEND TO THE FULL DEPTH OF THE EXISTING PAVEMENT. THE SAWCUT LINES SHOWN ON THE DRAWINGS ARE SCHEMATIC AND NOT INTENDED TO SHOW THE EXACT ALIGNMENT OF SUCH CUTS.
12. CONTRACTOR SHALL CONFORM TO APPLICABLE REGULATORY PROCEDURES IF HAZARDOUS OR CONTAMINATED MATERIALS ARE DISCOVERED.
13. CONTRACTOR IS RESPONSIBLE FOR JOB SAFETY AND SHALL PROVIDE, ERECT, AND MAINTAIN TEMPORARY BARRIERS, WARNING SIGNS, TRAFFIC CONES, AND PROTECTION AS NECESSARY DURING DEMOLITION ACTIVITIES.
14. CONTRACTOR SHALL REMOVE ALL EXISTING STRUCTURES, FACILITIES, IMPROVEMENTS, ETC. AS SHOWN, UNLESS OTHERWISE DIRECTED BY THE OWNER OR OWNER'S REPRESENTATIVE.
15. CONTRACTOR SHALL BACKFILL ALL EXCAVATION RESULTING FROM, OR INCIDENTAL TO, DEMOLITION ACTIVITIES. BACKFILL SHALL BE ACCOMPLISHED WITH APPROVED MATERIALS, AND SHALL BE PLACED AS COMPACTED ENGINEERED FILL AS REQUIRED TO SUPPORT NEW IMPROVEMENTS. BACKFILLING SHALL OCCUR IMMEDIATELY AFTER DEMOLITION ACTIVITIES UNLESS OTHERWISE DIRECTED BY THE OWNER'S REPRESENTATIVE.
16. DEMOLITION AREAS SHALL BE GRADED TO MATCH ADJACENT TERRAIN TO FORM A SMOOTH, CLEAN (FREE OF DEBRIS), FREE DRAINING SURFACE, UNLESS OTHERWISE SHOWN ON THE DRAWINGS OR APPROVED BY THE OWNER'S REPRESENTATIVE.
17. CONTRACTOR SHALL COORDINATE WITH UTILITY COMPANIES FOR RELOCATION OF EXISTING UTILITIES, ETC. CONTRACTOR SHALL PROVIDE ALL MATERIALS AND PAY ALL COSTS FOR EXCAVATION, BACKFILL, CONDUIT, WIRING, AND APPURTENANCES REQUIRED TO COMPLETE THE WORK.

LEGEND

	EXISTING	PROPOSED
DECIDUOUS TREE		
CONIFEROUS TREE		
FIRE HYDRANT		
WATER BLOWOFF		
WATER METER		
WATER VALVE		
DOUBLE CHECK VALVE		
AIR RELEASE VALVE		
SANITARY SEWER CLEAN OUT		
SANITARY SEWER MANHOLE		
SIGN		
STREET LIGHT		
MAILBOX	MB	MB
STORM SEWER CLEAN OUT		
STORM SEWER CATCH BASIN		
STORM SEWER MANHOLE		
GAS METER		
GAS VALVE		
GUY WIRE ANCHOR		
POWER POLE		
POWER VAULT	P	P
POWER JUNCTION BOX		
POWER PEDESTAL		
COMMUNICATIONS VAULT	C	C
COMMUNICATIONS JUNCTION BOX		
COMMUNICATIONS RISER		

	EXISTING	PROPOSED
RIGHT-OF-WAY LINE		
BOUNDARY LINE		
PROPERTY LINE		
CENTERLINE		
DITCH		
CURB		
EDGE OF PAVEMENT		
EASEMENT		
FENCE LINE		
GRAVEL EDGE		
POWER LINE	PWR	PWR
OVERHEAD WIRE	OHW	OHW
COMMUNICATIONS LINE	COM	COM
FIBER OPTIC LINE	CFO	CFO
GAS LINE	GAS	GAS
STORM SEWER LINE	STM	STM
SANITARY SEWER LINE	SAN	SAN
WATER LINE	WAT	WAT

EROSION AND SEDIMENT CONTROL BMP IMPLEMENTATION

1. ALL BASE ESC MEASURES (INLET PROTECTION, PERIMETER SEDIMENT CONTROL, GRAVEL CONSTRUCTION ENTRANCES, ETC.) MUST BE IN PLACE, FUNCTIONAL, AND APPROVED IN AN INITIAL INSPECTION, PRIOR TO COMMENCEMENT OF CONSTRUCTION ACTIVITIES.
2. ALL "SEDIMENT BARRIERS (TO BE INSTALLED AFTER GRADING)" SHALL BE INSTALLED IMMEDIATELY FOLLOWING ESTABLISHMENT OF FINISHED GRADE AS SHOWN ON THESE PLANS.
3. INLET PROTECTION SHALL BE IN-PLACE IMMEDIATELY FOLLOWING PAVING ACTIVITIES.
4. LONG TERM SLOPE STABILIZATION MEASURES SHALL BE IN PLACE OVER AREAS WITH A SLOPE MORE THAN 5:1.
5. CONSTRUCTION DEWATERING ACTIVITIES (INCLUDING GROUNDWATER DEWATERING AND WELL DRILLING DISCHARGE ASSOCIATED WITH THE REGISTERED CONSTRUCTION ACTIVITY), PROVIDED THAT:
   A. THE WATER IS LAND APPLIED IN A WAY THAT RESULTS IN COMPLETE INFILTRATION WITH NO POTENTIAL TO DISCHARGE TO A SURFACE WATER OF THE STATE, OR
   B. BEST MANAGEMENT PRACTICES (BMPS) OR AN APPROVED TREATMENT SYSTEM IS USED TO ENSURE COMPLIANCE WITH DISCHARGE AND WATER QUALITY REQUIREMENTS.

DEMOLITION, GRADING, AND EROSION & SEDIMENT CONTROL SHEET INDEX

C050 GRADING, EROSION AND SEDIMENT CONTROL COVER SHEET
C051 GRADING, EROSION AND SEDIMENT CONTROL NOTES
C052 DEMOLITION PLAN
C053 GRADING PLAN
C054A INITIAL EROSION AND SEDIMENT CONTROL PLAN
C054B GRADING, EROSION AND SEDIMENT CONTROL PLAN
C055 GRADING, EROSION AND SEDIMENT CONTROL DETAILS
C056 GRADING, EROSION AND SEDIMENT CONTROL DETAILS

AKS ENGINEERING & FORESTRY, LLC
12965 SW HERMAN RD STE 100
TUALATIN, OR 97062
P: 503.563.6151
F: 503.563.6152
aks-eng.com

AKS — ENGINEERING · SURVEYING · NATURAL RESOURCES
FORESTRY · PLANNING · LANDSCAPE ARCHITECTURE

KNOLLCREST SUBDIVISION
WEST LINN OREGON
TAX LOTS 100 & 200 CLACKAMAS COUNTY TAX MAP 2 1E 25CC

GRADING, EROSION AND SEDIMENT CONTROL NOTES

DESIGNED BY: CLR
DRAWN BY: NSL/AMF
CHECKED BY: RSW
SCALE: AS NOTED
DATE: 07/30/2018

REGISTERED PROFESSIONAL ENGINEER 58542PE OREGON JULY 9, 2002 MONTGOMERY B. HURLEY
RENEWAL DATE: 6/30/19

REVISIONS

JOB NUMBER 5132

SHEET C051

AKS DRAWING FILE: 5132 C000 COVER.DWG | LAYOUT: C051

PRE-CONSTRUCTION, CLEARING, AND DEMOLITION NOTES

1. ALL BASE ESC MEASURES (INLET PROTECTION, PERIMETER SEDIMENT CONTROL, GRAVEL CONSTRUCTION ENTRANCES, ETC.) MUST BE IN PLACE, FUNCTIONAL, AND APPROVED IN AN INITIAL INSPECTION, PRIOR TO COMMENCEMENT OF CONSTRUCTION ACTIVITIES.
2. SEDIMENT BARRIERS APPROVED FOR USE INCLUDE SEDIMENT FENCE, STRAW WATTLES, OR OTHER APPROVED MATERIALS.
3. SENSITIVE RESOURCES INCLUDING, BUT NOT LIMITED TO, TREES, WETLANDS, AND RIPARIAN PROTECTION AREAS SHALL BE CLEARLY DELINEATED WITH ORANGE CONSTRUCTION FENCING OR CHAIN LINK FENCING IN A MANNER THAT IS CLEARLY VISIBLE TO ANYONE IN THE AREA. NO ACTIVITIES ARE PERMITTED TO OCCUR BEYOND THE CONSTRUCTION BARRIER.
4. CONSTRUCTION ENTRANCES SHALL BE INSTALLED AT THE BEGINNING OF CONSTRUCTION AND MAINTAINED FOR THE DURATION OF THE PROJECT. ADDITIONAL MEASURES INCLUDING, BUT NOT LIMITED TO, STREET SWEEPING, AND VACUUMING, MAY BE REQUIRED TO INSURE THAT ALL PAVED AREAS ARE KEPT CLEAN FOR THE DURATION OF THE PROJECT.
5. RUN-ON AND RUN-OFF CONTROLS SHALL BE IN PLACE AND FUNCTIONING PRIOR TO BEGINNING SUBSTANTIAL CONSTRUCTION ACTIVITIES.

WET WEATHER MEASURES, SEEDING NOTES, AND SPECIFICATIONS

1. HYDROMULCH (TACKIFIED WOOD-FIBER MULCH) SHALL BE APPLIED TO THE PROJECT SITE WITH GRASS SEED AT A RATE OF 2000 LB./ACRE. SLOPE MATTING (NORTH AMERICAN GREEN S150, OR APPROVED EQUAL – ALTERNATE SLOPE MATTING MATERIALS MAY BE USED IF APPROVED BY THE PROJECT ENGINEER) SHALL BE USED ALONG WITH THE HYDROMULCH ON SLOPES 5H:1V OR STEEPER. THE METHODS USED AND APPLICATION RATE WILL BE PER THE SEED SUPPLIER'S RECOMMENDATIONS.
2. DRY, LOOSE, WEED-FREE STRAW USED AS MULCH SHALL BE APPLIED AT DOUBLE THE HYDROMULCH APPLICATION REQUIREMENT (4000 LB./ACRE). ANCHOR STRAW BY WORKING BY HAND OR WITH EQUIPMENT (ROLLERS, CLEAT TRACKS, ETC.). IF THIS IS UTILIZED AS MULCH, IT SHALL BE SPREAD UNIFORMLY IMMEDIATELY FOLLOWING SEEDING.
3. SEED USED FOR TEMPORARY OR PERMANENT SEEDING SHALL BE COMPOSED OF ONE OF THE FOLLOWING MIXTURES, UNLESS OTHERWISE AUTHORIZED:
   A. DWARF GRASS MIX (MIN. 150 LB./AC.)
      1. DWARF PERENNIAL RYEGRASS (80% BY WEIGHT)
      2. CREEPING RED FESCUE (20% BY WEIGHT)
4. SLOPE TO RECEIVE TEMPORARY OR PERMANENT SEEDING SHALL HAVE THE SURFACE ROUGHENED BY MEANS OF TRACK-WALKING OR THE USE OF OTHER APPROVED IMPLEMENTS. SURFACE ROUGHENING IMPROVES SEED BEDDING AND REDUCES RUN-OFF VELOCITY.
5. IN ACCORDANCE WITH SUPPLIER'S RECOMMENDATIONS, DEVELOPED AREAS WITHIN 50 FEET OF WATER BODIES AND WETLANDS MUST USE A NON-PHOSPHOROUS FERTILIZER.
6. SEEDING SHALL BE SUPPLIED WITH ADEQUATE MOISTURE TO ESTABLISH GRASS. SUPPLY WATER AS NEEDED, ESPECIALLY IN UNUSUALLY HOT OR DRY WEATHER CONDITIONS OR ON ADVERSE SITES. WATER APPLICATION RATES SHOULD BE CONTROLLED TO PROVIDE ADEQUATE MOISTURE WITHOUT CAUSING RUNOFF.
7. AREAS WHICH FAIL TO ESTABLISH GRASS COVER ADEQUATE TO PREVENT EROSION SHALL BE RESEEDED AS SOON AS SUCH AREAS ARE IDENTIFIED, AND ALL APPROPRIATE MEASURES SHALL BE TAKEN TO ESTABLISH ADEQUATE COVER.
8. CONTRACTOR SHALL TAKE EVERY PRECAUTION DURING CONSTRUCTION TO KEEP WATER FROM ADVERSELY AFFECTING ALL STRUCTURES, INCLUDING RETAINING WALLS, SLOPES, ETC. CONSULT WITH THE PROJECT ENGINEER FOR SPECIFIC WET WEATHER MEASURES IF UNSURE OF PROPER TREATMENT.
9. SEED MIX SHALL BE INSTALLED ON EXPOSED SOIL AREAS ONCE GRADING ACTIVITY HAS BEEN COMPLETED ON EACH PORTION OF THE SITE PRIOR TO PROCEEDING TO ANOTHER AREA OF THE SITE.
10. CONTRACTOR MAY BE REQUIRED TO RESEED SOME AREAS DUE TO FURTHER DISTURBANCE AFTER PLANT MATERIAL HAS BEEN INSTALLED ON EXPOSED SOIL AREAS. CONTRACTOR WILL BE RESPONSIBLE FOR PROVIDING A FULL STAND OF GRASS PRIOR TO FINAL APPROVAL.
11. SEED MULCHING/SEEDING SHALL BE APPLIED TO ALL EXPOSED SOIL AREAS.

GRADING, STREET, AND UTILITY EROSION AND SEDIMENT CONSTRUCTION NOTES

1. LONG TERM SLOPE STABILIZATION MEASURES SHALL INCLUDE THE ESTABLISHMENT OF PERMANENT VEGETATIVE COVER VIA SEEDING WITH APPROVED MIX AND APPLICATION RATE.
2. TEMPORARY SLOPE STABILIZATION MEASURES SHALL INCLUDE: COVERING EXPOSED SOIL WITH PLASTIC SHEETING, STRAW MULCHING, OR OTHER APPROVED MEASURES.
3. STOCKPILED SOIL OR STRIPPINGS SHALL BE PLACED IN A STABLE LOCATION AND CONFIGURATION. STOCKPILES SHALL BE COVERED WITH PLASTIC SHEETING AT THE END OF EACH WORKDAY. SEDIMENT FENCE IS REQUIRED AROUND THE PERIMETER OF THE STOCKPILE.
4. EXPOSED CUT OR FILL AREAS SHALL BE STABILIZED THROUGH THE USE OF TEMPORARY SEEDING AND MULCHING, EROSION CONTROL BLANKETS OR MATS, MID-SLOPE SEDIMENT FENCES OR WATTLES, OR OTHER APPROPRIATE MEASURES. SLOPES EXCEEDING 25% MAY REQUIRE ADDITIONAL EROSION CONTROL MEASURES.
5. AREAS SUBJECT TO WIND EROSION SHALL USE APPROPRIATE DUST CONTROL MEASURES INCLUDING THE APPLICATION OF A FINE SPRAY OF WATER, PLASTIC SHEETING, STRAW MULCHING, OR OTHER APPROVED MEASURES.
6. CONSTRUCTION ENTRANCES SHALL BE INSTALLED AT THE BEGINNING OF CONSTRUCTION AND MAINTAINED FOR THE DURATION OF THE PROJECT. ADDITIONAL MEASURES INCLUDING, BUT NOT LIMITED TO, TIRE WASHES, STREET SWEEPING, AND VACUUMING MAY BE BE REQUIRED TO ENSURE THAT ALL PAVED AREAS ARE KEPT CLEAN FOR THE DURATION OF THE PROJECT.
7. ACTIVE INLETS TO STORM WATER SYSTEMS SHALL BE PROTECTED THROUGH THE USE OF APPROVED INLET PROTECTION MEASURES. ALL INLET PROTECTION MEASURES ARE TO BE REGULARLY INSPECTED AND MAINTAINED AS NEEDED.
8. SATURATED MATERIALS THAT ARE HAULED OFF-SITE MUST BE TRANSPORTED IN WATER-TIGHT TRUCKS TO ELIMINATE SPILLAGE OF SEDIMENT AND SEDIMENT-LADEN WATER.
9. AN AREA SHALL BE PROVIDED FOR THE WASHING OUT OF CONCRETE TRUCKS IN A LOCATION THAT DOES NOT PROVIDE RUN-OFF THAT CAN ENTER THE STORM WATER SYSTEM. IF THE CONCRETE WASH-OUT AREA CAN NOT BE CONSTRUCTED GREATER THAN 50' FROM ANY DISCHARGE POINT, SECONDARY MEASURES SUCH AS BERMS OR TEMPORARY SETTLING PITS MAY BE REQUIRED. THE WASH-OUT SHALL BE LOCATED WITHIN SIX FEET OF TRUCK ACCESS AND BE CLEANED WHEN IT REACHES 50% OF THE CAPACITY.
10. SWEEPINGS FROM EXPOSED AGGREGATE CONCRETE SHALL NOT BE TRANSFERRED TO THE STORMWATER SYSTEM. SWEEPINGS SHALL BE PICKED UP AND DISPOSED IN THE TRASH.
11. AVOID PAVING IN WET WEATHER WHEN PAVING CHEMICALS CAN RUN-OFF INTO THE STORMWATER SYSTEM.
12. USE BMPs SUCH AS INLET PROTECTION TO PREVENT RUN-OFF FROM REACHING DISCHARGE POINTS.
13. COVER CATCH BASINS, MANHOLES, AND OTHER DISCHARGE POINTS WHEN APPLYING SEAL COAT, TACK COAT, ETC. TO PREVENT INTRODUCING THESE MATERIALS TO THE STORM WATER SYSTEM.
14. SLOPE MATTING IS REQUIRED ON ALL SLOPES GRATER THAN 5H:1V. CONTRACTOR SHALL SUBMIT SLOPE MATTING MATERIAL SPECIFICATIONS TO PROJECT ENGINEER FOR APPROVAL PRIOR TO PURCHASING MATERIALS.

OTHER MISCELLANEOUS BMP NOTES

TO PREVENT ILLICIT CONNECTION AND ILLEGAL DISCHARGE:

1. INSPECT SITE BEFORE BEGINNING THE JOB FOR EVIDENCE OF ILLICIT CONNECTIONS OR ILLEGAL DUMPING OR DISCHARGES.
2. INSPECT SITE REGULARLY DURING PROJECT EXECUTION FOR EVIDENCE OF ILLICIT CONNECTIONS OR ILLEGAL DUMPING OR DISCHARGES.
3. OBSERVE SITE PERIMETER FOR EVIDENCE OR POTENTIAL OF ILLICITLY DISCHARGED OR ILLEGALLY DUMPED MATERIAL WHICH MAY ENTER THE JOB SITE.
4. IDENTIFICATION OF ILLICIT CONNECTIONS AND ILLEGAL DUMPING OR DISCHARGES:

   A. SOLIDS: LOOK FOR DEBRIS, OR RUBBISH PILES. SOLID WASTE DUMPING OFTEN OCCURS ON ROADWAYS WITH LIGHT TRAFFIC LOADS OR IN AREAS NOT EASILY VISIBLE FROM THE TRAVELED WAY.

   B. LIQUIDS:
      1. VISIBLE SIGNS OF STAINING OR UNUSUAL COLORS TO THE PAVEMENT OR SURROUNDING ADJACENT SOILS.
      2. DISCOLORATION OR OILY SUBSTANCES IN THE WATER OR STAINS AND RESIDUES DETAINED WITH DITCHES, CHANNELS OR DRAINAGE BOXES.
      3. PUNGENT ODORS COMING FROM THE DRAINAGE SYSTEMS.
      4. ABNORMAL WATER FLOW DURING THE DRY WEATHER SEASON.
      5. URBAN AREAS – EVIDENCE OF ILLICIT CONNECTIONS OR ILLEGAL DISCHARGES IS TYPICALLY DETECTED AT THE STORM DRAIN OUTFALL LOCATIONS OR AT THE MANHOLES. SIGNS OF AN ILLICIT CONNECTION OR ILLEGAL DISCHARGE CAN INCLUDE:
         * – ABNORMAL WATER FLOW DURING THE DRY WEATHER SEASON.
         * – UNUSUAL FLOWS IN SUB-DRAIN SYSTEMS USED FOR DEWATERING.
         * – PUNGENT ODORS COMING FROM THE DRAINAGE SYSTEMS.
         * – DISCOLORATION OR OILY SUBSTANCES IN THE WATER OR STAINS AND RESIDUES DETAINED WITHIN DITCHES.
         * – EXCESSIVE SEDIMENT DEPOSITS, PARTICULARLY ADJACENT TO OR NEAR ACTIVE OFF-SITE CONSTRUCTION.
5. NOTIFY THE PROJECT SUPERINTENDENT OF ANY ILLICIT CONNECTIONS, DUMPINGS, OR DISCHARGES AT THE TIME OF DISCOVERY.
6. VEHICLES AND EQUIPMENT SHOULD BE WASHED OFF SITE AT A CONTROLLED WASH FACILITY WHEN AT ALL POSSIBLE.
7. USE "DRY CLEANING METHODS" SUCH AS WIPING DOWN WHENEVER POSSIBLE RATHER THAN WATER WASHING VEHICLES ON SITE.
8. IF CLEANING MUST BE CONDUCTED ON-SITE, IT SHALL BE CONDUCTED IN A DEDICATED AREA WITH THE FOLLOWING CHARACTERISTICS:
   * – LOCATED AWAY FROM THE STORM DRAIN INLETS, DRAINAGE FACILITIES, OR WATERCOURSES.
   * – PAVED WITH CONCRETE OR ASPHALT, OR STABILIZED WITH AN AGGREGATE BASE.
   * – BERMED TO CONTAIN WASH WATERS AND TO PREVENT RUN-ON AND RUNOFF.
   * – CONFIGURED WASH AREA WITH A SUMP TO ALLOW COLLECTION AND DISPOSAL OF WASH WATER.
   * – DISCHARGE WASH WATER TO A SANITARY OR PROCESS WASTE SEWER (WHERE PERMITTED), OR TO A DEAD END SUMP. WASH WATERS SHALL NOT BE DISCHARGED TO STORM DRAINS OR WATERCOURSES.
   * – USED ONLY WHEN NECESSARY.
9. WHEN CLEANING VEHICLES OR EQUIPMENT WITH WATER:
   * – USE AS LITTLE WATER AS POSSIBLE. CONSIDER USING A HIGH PRESSURE SPRAYER AND USE THE POSITIVE SHUTOFF VALVE.
   * – DO NOT USE SOLVENTS OR DETERGENTS TO CLEAN VEHICLES OR EQUIPMENT ON SITE.
   * – DO NOT USE STEAM CLEANING ON SITE.
10. INSPECT AND CLEAN WORK AREAS REGULARLY TO LIMIT WIND BLOWN DEBRIS AND POLLUTANTS TRANSPORTED BY STORMWATER.

TO REUSE AND RECYCLE CONSTRUCTION WASTES:

1. USE TRENCH SPOILS AND CUT AREA SOIL FOR FILL. UNSUITABLE AND EXCESS MATERIAL SHALL BE HAULED OFF SITE TO AN APPROVED LOCATION. IMPORTED FILL MATERIAL SHALL BE APPROVED BY THE PROJECT'S GEOTECHNICAL ENGINEER.

DEMOLITION GENERAL NOTES

1. PRIOR TO STARTING DEMOLITION OPERATIONS, THE CONTRACTOR SHALL APPLY FOR AND OBTAIN ALL NECESSARY PERMITS REQUIRED BY FEDERAL, STATE, CITY, COUNTY, AND LOCAL LAWS, CODES, AND REGULATIONS. DEMOLITION PERMIT SHALL BE REQUIRED THROUGH THE BUILDING DIVISION.
2. THE CONTRACTOR SHALL PROVIDE ALL THE "MEANS AND METHODS" NECESSARY TO PREVENT MOVEMENT, SETTLEMENT, OR COLLAPSE OF EXISTING STRUCTURES AND/OR IMPROVEMENTS TO REMAIN ON OR OFF SITE. THE CONTRACTOR IS RESPONSIBLE FOR ANY DAMAGE TO EXISTING STRUCTURES AND/OR IMPROVEMENTS TO REMAIN AND SHALL RESTORE ANY DAMAGE TO THE PRE-DEMOLITION CONDITION OR BETTER USING NEW MATERIALS. ANY REPAIRS REQUIRED SHALL BE PERFORMED AT THE CONTRACTOR'S SOLE COST AND EXPENSE.
3. CONTRACTOR SHALL BE REQUIRED TO SECURE ALL NECESSARY PERMITS AND APPROVALS FOR ALL OFF SITE MATERIAL SOURCES AND DISPOSAL FACILITIES. CONTRACTOR SHALL SUPPLY A COPY OF APPROVALS TO OWNER'S REPRESENTATIVE PRIOR TO INITIATING WORK.
4. CONTRACTOR SHALL INSTALL EROSION CONTROL MEASURES IN CONFORMANCE WITH THE EROSION CONTROL PLAN, NOTES, AND DETAILS PRIOR TO STARTING DEMOLITION OPERATIONS.
5. THE LOCATION OF ALL UTILITIES SHALL BE MARKED IN THE FIELD PRIOR TO DEMOLITION. CONTRACTOR SHALL PROTECT AND MAINTAIN IN A SAFE AND OPERABLE CONDITION ALL UTILITIES INDICATED TO REMAIN, AND PREVENT INTERRUPTION OF EXISTING UTILITY SERVICES EXCEPT WHEN AUTHORIZED IN WRITING BY THE AUTHORITIES HAVING JURISDICTION. CONTRACTOR SHALL PROVIDE TEMPORARY SERVICES, ACCEPTABLE TO GOVERNING AUTHORITIES AND OWNER'S REPRESENTATIVE, FOR BUILDING(S) TO REMAIN AS REQUIRED DURING INTERRUPTIONS TO EXISTING UTILITY SERVICES.
6. DEMOLITION ACTIVITIES AND EQUIPMENT SHALL NOT USE AREAS OUTSIDE THE PROJECT LIMITS WITHOUT WRITTEN PERMISSION FROM THE OWNER'S REPRESENTATIVE AND/OR GOVERNMENTAL AGENCIES HAVING JURISDICTION IF APPLICABLE.
7. THE CONTRACTOR SHALL KEEP ALL STREETS AND PUBLIC RIGHT-OF-WAYS CLEAN OF MUD, DIRT, AND DEMOLITION DEBRIS. THE CONTRACTOR SHALL MONITOR THE HAULING OF DEBRIS TO ENSURE THAT ANY SPILLAGE FROM TRUCKS IS PROMPTLY AND COMPLETELY REMOVED AND CLEANED UP. IF REQUIRED AND/OR NECESSARY, THE CONTRACTOR SHALL COVER ALL HAUL VEHICLES.
8. CONTRACTOR SHALL CONDUCT DEMOLITION ACTIVITIES IN SUCH A MANNER TO ENSURE MINIMUM INTERFERENCE WITH ROADS, STREETS, SIDEWALKS, WALKWAYS, AND OTHER ADJACENT FACILITIES. IF APPLICABLE STREET CLOSURE PERMITS MUST BE RECEIVED FROM THE APPROPRIATE GOVERNMENTAL AUTHORITY PRIOR TO THE COMMENCEMENT OF ANY STREET OPENING OR DEMOLITION ACTIVITIES IN THE RIGHT-OF-WAY.
9. CONTRACTOR SHALL CLEAN ADJACENT STRUCTURES AND IMPROVEMENTS OF DUST, DIRT, AND DEBRIS CAUSED BY DEMOLITION OPERATIONS. RETURN ADJACENT AREAS TO CONDITIONS EXISTING PRIOR TO THE START OF THE WORK.
10. DEBRIS SHALL NOT BE BURIED OR STOCKPILED ON THE PROPERTY. ALL DEMOLITION DEBRIS AND MATERIALS SHALL BE DISPOSED OF AT OFFSITE LOCATIONS IN ACCORDANCE WITH ALL MUNICIPAL, COUNTY, STATE, AND FEDERAL LAWS, CODES, AND REGULATIONS. THE CONTRACTOR SHALL MAINTAIN RECORDS TO DEMONSTRATE PROPER DISPOSAL ACTIVITIES AND SHALL PROVIDE A COPY TO THE OWNER OR OWNER'S REPRESENTATIVE UPON REQUEST. CONTRACTOR SHALL COORDINATE AND PAY ALL COSTS INCLUDING DISPOSAL CHARGES.
11. PAVEMENT SHALL BE SAW CUT IN STRAIGHT LINES, AND EXCEPT FOR EDGE OF BUTT JOINTS, SHALL EXTEND TO THE FULL DEPTH OF THE EXISTING PAVEMENT. THE SAWCUT LINES SHOWN ON THE DRAWINGS ARE SCHEMATIC AND NOT INTENDED TO SHOW THE EXACT ALIGNMENT OF SUCH CUTS.
12. CONTRACTOR SHALL CONFORM TO APPLICABLE REGULATORY PROCEDURES IF HAZARDOUS OR CONTAMINATED MATERIALS ARE DISCOVERED.
13. CONTRACTOR IS RESPONSIBLE FOR JOB SAFETY AND SHALL PROVIDE, ERECT, AND MAINTAIN TEMPORARY BARRIERS, WARNING SIGNS, TRAFFIC CONES, AND PROTECTION AS NECESSARY DURING DEMOLITION ACTIVITIES.
14. CONTRACTOR SHALL REMOVE ALL EXISTING STRUCTURES, FACILITIES, IMPROVEMENTS, ETC. AS SHOWN, UNLESS OTHERWISE DIRECTED BY THE OWNER OR OWNER'S REPRESENTATIVE.
15. CONTRACTOR SHALL BACKFILL ALL EXCAVATION RESULTING FROM, OR INCIDENTAL TO, DEMOLITION ACTIVITIES. BACKFILL SHALL BE ACCOMPLISHED WITH APPROVED MATERIALS, AND SHALL BE PLACED AS COMPACTED ENGINEERED FILL AS REQUIRED TO SUPPORT NEW IMPROVEMENTS. BACKFILLING SHALL OCCUR IMMEDIATELY AFTER DEMOLITION ACTIVITIES UNLESS OTHERWISE DIRECTED BY THE OWNER'S REPRESENTATIVE.
16. DEMOLITION AREAS SHALL BE GRADED TO MATCH ADJACENT TERRAIN TO FORM A SMOOTH, CLEAN (FREE OF DEBRIS), FREE DRAINING SURFACE, UNLESS OTHERWISE SHOWN ON THE DRAWINGS OR APPROVED BY THE OWNER'S REPRESENTATIVE.
17. CONTRACTOR SHALL COORDINATE WITH UTILITY COMPANIES FOR RELOCATION OF EXISTING UTILITIES, ETC. CONTRACTOR SHALL PROVIDE ALL MATERIALS AND PAY ALL COSTS FOR EXCAVATION, BACKFILL, CONDUIT, WIRING, AND APPURTENANCES REQUIRED TO COMPLETE THE WORK.

LEGEND

	EXISTING	PROPOSED		EXISTING	PROPOSED
DECIDUOUS TREE			STORM SEWER CLEAN OUT		
CONIFEROUS TREE			STORM SEWER CATCH BASIN		
FIRE HYDRANT			STORM SEWER MANHOLE		
WATER BLOWOFF			GAS METER		
WATER METER			GAS VALVE		
WATER VALVE			GUY WIRE ANCHOR		
DOUBLE CHECK VALVE			POWER POLE		
AIR RELEASE VALVE			POWER VAULT	P	P
SANITARY SEWER CLEAN OUT			POWER JUNCTION BOX		
SANITARY SEWER MANHOLE			POWER PEDESTAL		
SIGN			COMMUNICATIONS VAULT	C	C
STREET LIGHT			COMMUNICATIONS JUNCTION BOX		
MAILBOX	LBX	LBX	COMMUNICATIONS RISER		

	EXISTING	PROPOSED
RIGHT-OF-WAY LINE		
BOUNDARY LINE		
PROPERTY LINE		
CENTERLINE		
DITCH		
CURB		
EDGE OF PAVEMENT		
EASEMENT		
FENCE LINE		
GRAVEL EDGE		
POWER LINE	PWR	PWR
OVERHEAD WIRE	OHW	OHW
COMMUNICATIONS LINE	COM	COM
FIBER OPTIC LINE	CFO	CFO
GAS LINE	GAS	GAS
STORM SEWER LINE	STM	STM
SANITARY SEWER LINE	SAN	SAN
WATER LINE	WAT	WAT

EROSION AND SEDIMENT CONTROL BMP IMPLEMENTATION

1. ALL BASE ESC MEASURES (INLET PROTECTION, PERIMETER SEDIMENT CONTROL, GRAVEL CONSTRUCTION ENTRANCES, ETC.) MUST BE IN PLACE, FUNCTIONAL, AND APPROVED IN AN INITIAL INSPECTION, PRIOR TO COMMENCEMENT OF CONSTRUCTION ACTIVITIES.
2. ALL "SEDIMENT BARRIERS (TO BE INSTALLED AFTER GRADING)" SHALL BE INSTALLED IMMEDIATELY FOLLOWING ESTABLISHMENT OF FINISHED GRADE AS SHOWN ON THESE PLANS.
3. INLET PROTECTION SHALL BE IN-PLACE IMMEDIATELY FOLLOWING PAVING ACTIVITIES.
4. LONG TERM SLOPE STABILIZATION MEASURES SHALL BE IN PLACE OVER AREAS WITH A SLOPE MORE THAN 5:1.
5. CONSTRUCTION DEWATERING ACTIVITIES (INCLUDING GROUNDWATER DEWATERING AND WELL DRILLING DISCHARGE ASSOCIATED WITH THE REGISTERED CONSTRUCTION ACTIVITY), PROVIDED THAT:
   A. THE WATER IS LAND APPLIED IN A WAY THAT RESULTS IN COMPLETE INFILTRATION WITH NO POTENTIAL TO DISCHARGE TO A SURFACE WATER OF THE STATE, OR
   B. BEST MANAGEMENT PRACTICES (BMPS) OR AN APPROVED TREATMENT SYSTEM IS USED TO ENSURE COMPLIANCE WITH DISCHARGE AND WATER QUALITY REQUIREMENTS.

DEMOLITION, GRADING, AND EROSION & SEDIMENT CONTROL SHEET INDEX

C050	GRADING, EROSION AND SEDIMENT CONTROL COVER SHEET
C051	GRADING, EROSION AND SEDIMENT CONTROL NOTES
C052	DEMOLITION PLAN
C053	GRADING PLAN
C054A	INITIAL EROSION AND SEDIMENT CONTROL PLAN
C054B	GRADING, EROSION AND SEDIMENT CONTROL PLAN
C055	GRADING, EROSION AND SEDIMENT CONTROL DETAILS
C056	GRADING, EROSION AND SEDIMENT CONTROL DETAILS

AKS ENGINEERING & FORESTRY, LLC
12965 SW HERMAN RD STE 100
TUALATIN, OR 97062
P: 503.563.6151
F: 503.563.6152
aks-eng.com

ENGINEERING · SURVEYING · NATURAL RESOURCES
FORESTRY · PLANNING · LANDSCAPE ARCHITECTURE

KNOLLCREST SUBDIVISION
WEST LINN
TAX LOTS 100 & 200
OREGON
CLACKAMAS COUNTY TAX MAP 2 1E 25CC

GRADING, EROSION AND SEDIMENT CONTROL NOTES

DESIGNED BY:	CLR
DRAWN BY:	NSL/AMF
CHECKED BY:	RSW
SCALE:	AS NOTED
DATE: 07/30/2018	

REGISTERED PROFESSIONAL ENGINEER 58540PE OREGON JULY 9, 2002 MONTGOMERY B. HURLEY
RENEWAL DATE: 6/30/19

REVISIONS

JOB NUMBER 5132

SHEET C051

AKS DRAWING FILE: 5132 C000 COVER.DWG | LAYOUT: C051

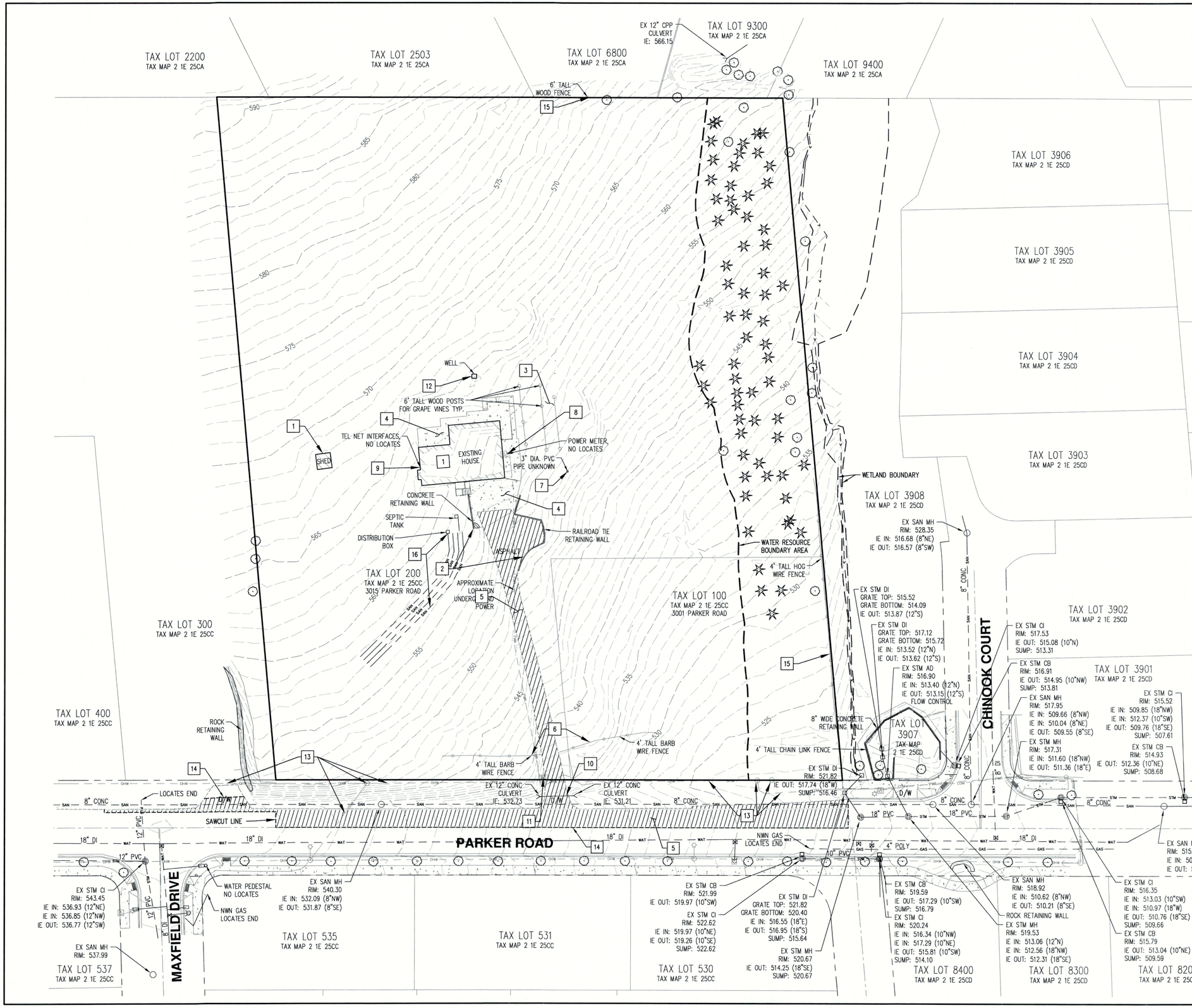

SCALE: 1"= 30 FEET

30 0 12 18 24 30

LEGEND

EXISTING GROUND CONTOUR (1 FT)

EXISTING GROUND CONTOUR (5 FT) — 600 —

CONIFEROUS DECIDUOUS

EXISTING TREES TO BE PRESERVED

EXISTING AC TO BE REMOVED

DEMOLITION KEY NOTES

1. REMOVE EXISTING HOUSE AND ASSOCIATED BUILDINGS. HAUL DEBRIS OFFSITE FOR DISPOSAL.
2. REMOVE EXISTING RETAINING WALL. HAUL DEBRIS OFFSITE FOR DISPOSAL.
3. REMOVE EXISTING GRAPE VINES, POSTS, AND WIRE.
4. REMOVE EXISTING CONCRETE DECKING. HAUL DEBRIS OFFSITE FOR DISPOSAL.
5. REMOVE EXISTING AC PAVEMENT. HAUL DEBRIS OFFSITE FOR DISPOSAL.
6. REMOVE EXISTING FENCE.
7. REMOVE EXISTING PVC PIPE.
8. REMOVE EXISTING POWER METER. COORDINATE WITH UTILITY PROVIDER.
9. REMOVE EXISTING TEL NET INTERFACES. COORDINATE WITH UTILITY PROVIDER.
10. REMOVE EXISTING CONCRETE CULVERT. HAUL DEBRIS OFFSITE FOR DISPOSAL.
11. REMOVE EXISTING MAILBOX.
12. REMOVE/ DECOMMISSION EXISTING WELL PER CITY OF WEST LINN STANDARDS.
13. REMOVE/RELOCATE EXISTING UTILITY POLE AND OVERHEAD WIRES. CONTRACTOR SHALL COORDINATE WITH THE UTILITY PROVIDERS TO PLACE UTILITIES UNDERGROUND.
14. AC PAVEMENT SAWCUT (TYP).
15. EXISTING FENCE TO REMAIN.
16. REMOVE/ DECOMMISSION EXISTING SEPTIC TANK/ DISTRIBUTION BOX/ DRAIN FIELD PER CITY OF WEST LINN STANDARDS.

NOTES:

A. CONTRACTOR SHALL COORDINATE WITH ALL UTILITY COMPANIES TO REMOVE/RELOCATE EXISTING UTILITY POLES AND RELOCATE SERVICES ALONG PROJECT FRONTAGE OF PARKER ROAD.

B. ALL EXISTING WELLS, SEPTIC/DRAINFIELD SYSTEMS, OUTHOUSES, AND FUEL TANKS SHALL BE DECOMMISSIONED PER CITY OF WEST LINN, CLACKAMAS COUNTY, AND STATE REQUIREMENTS (CONTRACTOR SHALL PROVIDE DOCUMENTATION OF DECOMMISSIONING TO ALL APPLICABLE PARTIES INCLUDING THE PROJECT ENGINEER, CITY, COUNTY, AND STATE).

C. A DEMOLITION PERMIT FROM THE CITY OF WEST LINN BUILDING DIVISION IS REQUIRED THROUGH A SEPARATE SUBMITTAL. CONTRACTOR TO SUBMIT AND OBTAIN PERMIT PRIOR TO BEGINNING WORK.

D. ALL DEMOLITION BEHIND TREE PROTECTION FENCE SHALL BE DONE USING HAND TOOLS AND METHODS UNLESS OTHERWISE APPROVED BY PROJECT ARBORIST.

E. EROSION CONTROL MEASURES ARE NOT SHOWN ON THIS SHEET FOR CLARITY. SEE SHEET C054B FOR GRADING, EROSION AND SEDIMENT CONTROL PLAN. EROSION CONTROL MEASURES SHALL BE INSTALLED PRIOR TO DEMOLITION.

F. SEE SHEETS C030–C034 FOR TREE PRESERVATION AND REMOVAL DETAILS.

G. SEE SHEET C051 FOR DEMOLITION GENERAL NOTES.

AKS ENGINEERING & FORESTRY, LLC
12965 SW HERMAN RD STE 100
TUALATIN, OR 97062
P: 503.563.6151
F: 503.563.6152
aks-eng.com

AKS

ENGINEERING · SURVEYING · NATURAL RESOURCES
FORESTRY · PLANNING · LANDSCAPE ARCHITECTURE

KNOLLCREST SUBDIVISION

WEST LINN
TAX LOTS 100 & 200

OREGON
CLACKAMAS COUNTY TAX MAP 2 1E 25CC

DEMOLITION PLAN

DESIGNED BY:	CLR
DRAWN BY:	NSL/AMF
CHECKED BY:	RSW
SCALE:	AS NOTED

DATE: 07/30/2018

REGISTERED PROFESSIONAL ENGINEER 58546PE OREGON MAY 9, 2002 MONTGOMERY B. NURSEY

RENEWAL DATE: 6/30/19

REVISIONS:

JOB NUMBER
5132

SHEET
C052

AKS DRAWING FILE: 5132 C050 DEMO.DWG | LAYOUT: C052

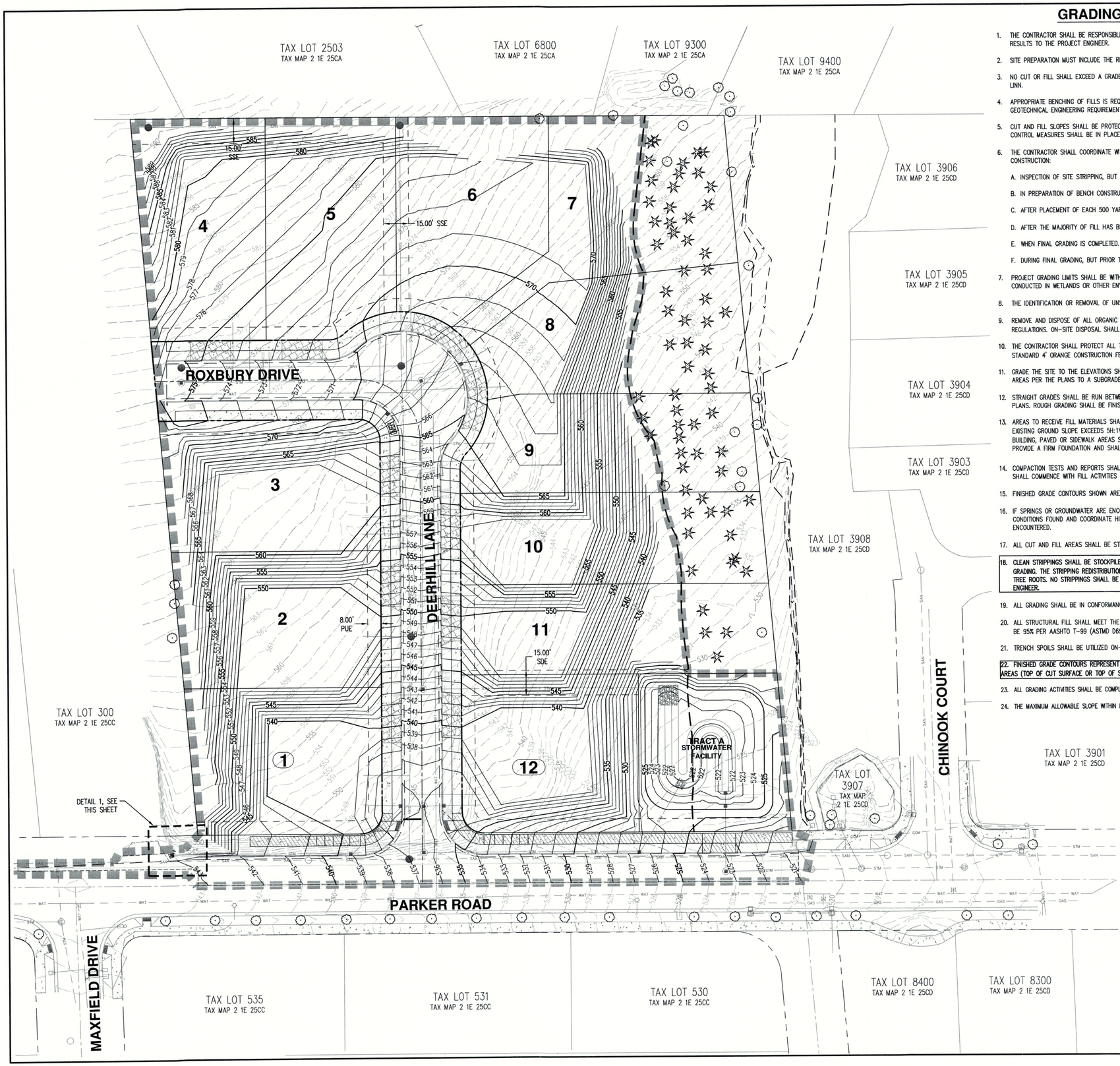

GRADING NOTES

1. THE CONTRACTOR SHALL BE RESPONSIBLE FOR MAKING THE NECESSARY ARRANGEMENTS WITH THE GEOTECHNICAL ENGINEER FOR COMPACTION TESTING AND FOR SUPPLYING THE RESULTS TO THE PROJECT ENGINEER.
2. SITE PREPARATION MUST INCLUDE THE REMOVAL OF VEGETATION, NON-COMPLYING FILL, TOPSOIL, OR OTHER UNSUITABLE MATERIAL PRIOR TO PLACEMENT OF THE FILL.
3. NO CUT OR FILL SHALL EXCEED A GRADE OF 2 HORIZONTAL TO 1 VERTICAL UNLESS APPROVED BEFOREHAND BY THE PROJECT ENGINEER, GEOTECHNICAL ENGINEER, AND CITY OF WEST LINN.
4. APPROPRIATE BENCHING OF FILLS IS REQUIRED FOR FILLS OVER 5 FEET IN HEIGHT ON SLOPES IN EXCESS OF 5 HORIZONTAL TO 1 VERTICAL. BENCHING MUST BE DONE PER THE GEOTECHNICAL ENGINEERING REQUIREMENTS.
5. CUT AND FILL SLOPES SHALL BE PROTECTED FROM EROSION. SUCH CONTROL MAY CONSIST OF APPROPRIATE REVEGETATION OR OTHER ACCEPTABLE MEANS AND METHODS. EROSION CONTROL MEASURES SHALL BE IN PLACE PRIOR TO EARTHWORK OR SITE STRIPPING.
6. THE CONTRACTOR SHALL COORDINATE WITH THE PROJECT ENGINEER AND THE PROJECT'S GEOTECHNICAL ENGINEER FOR REQUIRED INSPECTIONS AT THE FOLLOWING STAGES OF CONSTRUCTION:
   A. INSPECTION OF SITE STRIPPING, BUT PRIOR TO FILL PLACEMENT. EROSION CONTROL MEASURES SHALL BE IN PLACE AT THIS TIME.
   B. IN PREPARATION OF BENCH CONSTRUCTION PRIOR TO FILL PLACEMENT.
   C. AFTER PLACEMENT OF EACH 500 YARDS OF FILL.
   D. AFTER THE MAJORITY OF FILL HAS BEEN PLACED AND IS IN "ROUGH" GRADE BUT PRIOR TO FINAL GRADING.
   E. WHEN FINAL GRADING IS COMPLETED.
   F. DURING FINAL GRADING, BUT PRIOR TO BASE ROCK AND PAVEMENT CONSTRUCTION.
7. PROJECT GRADING LIMITS SHALL BE WITHIN THE PROJECT'S PROPERTY BOUNDARY AND/OR STREET RIGHT-OF-WAY, UNLESS OTHERWISE SHOWN ON PLANS. NO GRADING SHALL BE CONDUCTED IN WETLANDS OR OTHER ENVIRONMENTALLY SENSITIVE AREAS UNLESS SPECIFICALLY SHOWN ON THE APPROVED PLANS.
8. THE IDENTIFICATION OR REMOVAL OF UNSUITABLE MATERIAL SHALL BE DONE WITH CONSULTATION WITH THE PROJECT ENGINEER OR PROJECT'S GEOTECHNICAL ENGINEER.
9. REMOVE AND DISPOSE OF ALL ORGANIC AND/OR UNSUITABLE MATERIALS, INCLUDING TREES, STUMPS, ROOTS, BRUSH, AND GRASS IN SUCH A MANNER TO MEET ALL APPLICABLE REGULATIONS. ON-SITE DISPOSAL SHALL BE AS DETERMINED BY THE PROJECT ENGINEER OR PROJECT'S GEOTECHNICAL ENGINEER.
10. THE CONTRACTOR SHALL PROTECT ALL TREES THAT ARE NOT SPECIFICALLY SHOWN TO BE REMOVED ON APPROVED PLANS. ALL TREES TO BE PRESERVED SHALL BE FENCED WITH STANDARD 4' ORANGE CONSTRUCTION FENCING NO CLOSER TO THE TRUNK THAN THE DRIP LINE.
11. GRADE THE SITE TO THE ELEVATIONS SHOWN ON THE DRAWING WITH THE NECESSARY ADJUSTMENTS TO ACCOMMODATE THE FINISHED GRADES AS SPECIFIED. SHAPE FUTURE PAVED AREAS PER THE PLANS TO A SUBGRADE ELEVATION THAT WILL ACCOMMODATE FUTURE BASE ROCK AND PAVING.
12. STRAIGHT GRADES SHALL BE RUN BETWEEN FINISH GRADE AND/OR FINISH CONTOUR LINES SHOWN, UNLESS OTHERWISE NOTED. FINISH GRADES ARE TO DRAIN AS INDICATED ON THE PLANS. ROUGH GRADING SHALL BE FINISHED BY BLADING AND RAKING TO REASONABLE SMOOTH CONTOURS WITH GENTLE TRANSITIONS.
13. AREAS TO RECEIVE FILL MATERIALS SHALL BE PREPARED BY REMOVING ALL ORGANIC AND UNSUITABLE MATERIALS AND PROOF ROLLING. BENCHING IS REQUIRED ON FILLS WHERE THE EXISTING GROUND SLOPE EXCEEDS 5H:1V. BENCHING SHALL BE IN ACCORDANCE WITH PROJECT GEOTECHNICAL ENGINEER'S RECOMMENDATIONS. MATERIAL IN SOFT SPOTS WITHIN FUTURE BUILDING, PAVED OR SIDEWALK AREAS SHALL BE REMOVED TO THE DEPTH REQUIRED (AS DIRECTED BY THE PROJECT ENGINEER OR THE PROJECT'S GEOTECHNICAL ENGINEER) TO PROVIDE A FIRM FOUNDATION AND SHALL BE REPLACED WITH SUITABLE BACKFILL. ALL FILLS SHALL BE CONSTRUCTED IN HORIZONTAL LIFTS NOT TO EXCEED 8 INCHES LOOSE MEASURE.
14. COMPACTION TESTS AND REPORTS SHALL BE CONDUCTED BY AN APPROVED TESTING LABORATORY. TEST FREQUENCY SHALL BE PER THE PROJECT'S GEOTECHNICAL ENGINEER. TESTING SHALL COMMENCE WITH FILL ACTIVITIES AND AS A MINIMUM, ONE TEST SHALL BE TAKEN FOR EVERY 500 CUBIC YARDS PLACED OR 2 VERTICAL FEET, WHICHEVER IS LESS.
15. FINISHED GRADE CONTOURS SHOWN ARE APPROXIMATE FINAL GRADE ELEVATIONS (± ONE-FOOT).
16. IF SPRINGS OR GROUNDWATER ARE ENCOUNTERED DURING CONSTRUCTION, THE CONTRACTOR SHALL NOTIFY THE PROJECT'S GEOTECHNICAL ENGINEER AND PROJECT ENGINEER OF THE CONDITIONS FOUND AND COORDINATE HIS ACTIVITIES IN A MANNER THAT WILL ALLOW TIME TO REVIEW THE SITUATION AND PREPARE A PLAN TO PROPERLY MITIGATE THE WATER ENCOUNTERED.
17. ALL CUT AND FILL AREAS SHALL BE STRIPPED OF SOD AND OTHER NON-STRUCTURAL MATERIAL (DEPTH TO BE DETERMINED BY PROJECT'S GEOTECHNICAL ENGINEER).
18. CLEAN STRIPPINGS SHALL BE STOCKPILED AND LATER SPREAD EVENLY OVER SURFACES NOT RECEIVING A HARD, DURABLE SURFACE (PAVEMENT, ETC.) UPON COMPLETION OF FINAL GRADING. THE STRIPPING REDISTRIBUTION SHALL NOT EXCEED 12" IN DEPTH ON INDIVIDUAL LOTS AND OPEN SPACE TRACTS. STRIPPINGS SHALL BE FREE OF VEGETATION, ROCKS, AND TREE ROOTS. NO STRIPPINGS SHALL BE PLACED ON AREAS STEEPER THAN 5H:1V. EXCESS STRIPPINGS SHALL BE DISPOSED OF OFF-SITE, AS APPROVED BY OWNER AND PROJECT ENGINEER.
19. ALL GRADING SHALL BE IN CONFORMANCE WITH CHAPTER 33 OF THE CURRENT INTERNATIONAL BUILDING CODE (IBC).
20. ALL STRUCTURAL FILL SHALL MEET THE REQUIREMENTS OF THE PROJECT'S GEOTECHNICAL ENGINEER, GEOTECHNICAL REPORT, AND CITY OF WEST LINN. THE MINIMUM COMPACTION SHALL BE 95% PER AASHTO T-99 (ASTMD D698).
21. TRENCH SPOILS SHALL BE UTILIZED ON-SITE AS STRUCTURAL FILL, UNLESS OTHERWISE DIRECTED BY THE PROJECT ENGINEER AND OWNER.
22. FINISHED GRADE CONTOURS REPRESENT TOP OF PAVEMENT GRADES IN PAVED AREAS, TOP OF CONCRETE GRADES FOR CURB AND SIDEWALK, AND FINISHED GRADE IN ALL OTHER AREAS (TOP OF CUT SURFACE OR TOP OF STRUCTURAL FILL SURFACE).
23. ALL GRADING ACTIVITIES SHALL BE COMPLETED PER THE GEOTECHNICAL ENGINEERING REPORT, DATED OCTOBER 18, 2017, PREPARED BY GEOPACIFIC ENGINEERING, INC.
24. THE MAXIMUM ALLOWABLE SLOPE WITHIN PUBLIC UTILITY EASEMENT (PUE) SHALL BE 5H:1V.

LEGEND

EXISTING GROUND CONTOUR (1 FT)	99
EXISTING GROUND CONTOUR (5 FT)	100
FINISHED GRADE CONTOUR (1 FT)	99
FINISHED GRADE CONTOUR (5 FT)	100
DISTURBANCE BOUNDARY	

EASEMENT LEGEND

PUE: PUBLIC UTILITY EASEMENT
SDE: PUBLIC STORM DRAINAGE EASEMENT
SSE: PUBLIC SANITARY SEWER EASEMENT

N

SCALE: 1"=30 FEET

30 0 12 18 24 30

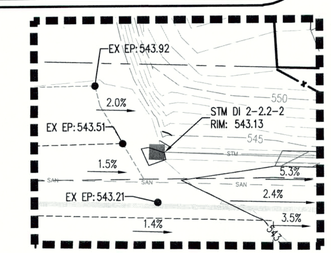

DETAIL 1
SCALE: 1"=10'

AKS ENGINEERING & FORESTRY, LLC
12965 SW HERMAN RD STE 100
TUALATIN, OR 97062
P: 503.563.6151
F: 503.563.6152
aks-eng.com

ENGINEERING · SURVEYING · NATURAL RESOURCES
FORESTRY · PLANNING · LANDSCAPE ARCHITECTURE

KNOLLCREST SUBDIVISION

WEST LINN
TAX LOTS 100 & 200

OREGON
CLACKAMAS COUNTY TAX MAP 2 1E 25CC

GRADING PLAN

DESIGNED BY:	CLR
DRAWN BY:	NSL/AMF
CHECKED BY:	RSW
SCALE:	AS NOTED
DATE: 07/30/2018	

REGISTERED PROFESSIONAL ENGINEER 58542PE OREGON JULY 9, 2013 MONTGOMERY B. HURLEY
RENEWAL DATE: 6/30/19

REVISIONS

JOB NUMBER
5132

SHEET
C053

AKS DRAWING FILE: 5132 C050 GRADING ESC.DWG | LAYOUT: C053

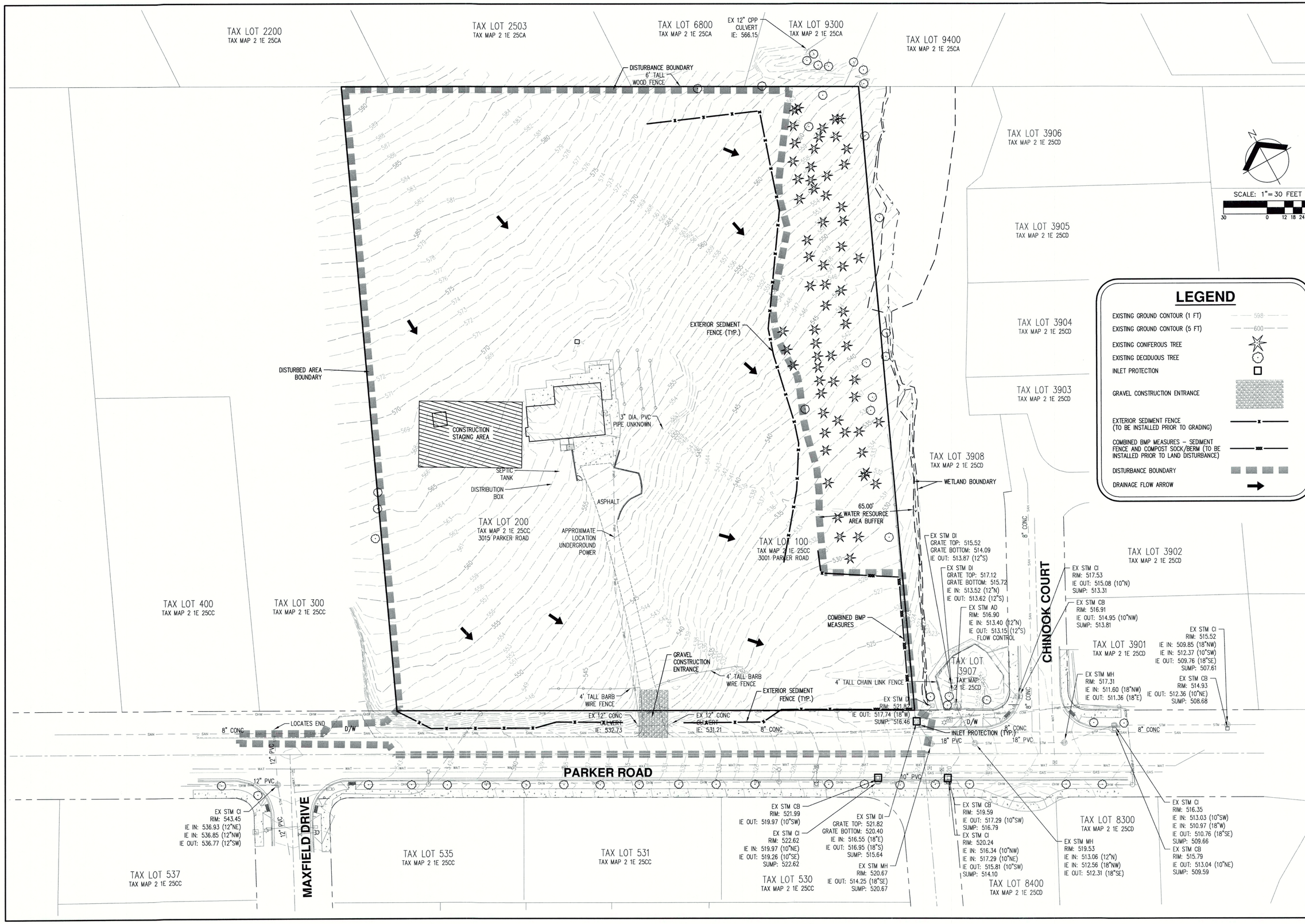

AKS ENGINEERING & FORESTRY, LLC
12965 SW HERMAN RD STE 100
TUALATIN, OR 97062
P: 503.563.6151
F: 503.563.6152
aks-eng.com

AKS
ENGINEERING · SURVEYING · NATURAL RESOURCES
FORESTRY · PLANNING · LANDSCAPE ARCHITECTURE

KNOLLCREST SUBDIVISION

WEST LINN
TAX LOTS 100 & 200

OREGON
CLACKAMAS COUNTY TAX MAP 2 1E 25CC

INITIAL EROSION AND SEDIMENT CONTROL PLAN

DESIGNED BY:	CLR
DRAWN BY:	NSL/AMF
CHECKED BY:	RSW
SCALE:	AS NOTED
DATE: 07/30/2018	

REGISTERED PROFESSIONAL ENGINEER
58540PE
OREGON
JULY 9, 2002
MONTGOMERY B. HURLEY
RENEWAL DATE: 6/30/19

REVISIONS

JOB NUMBER
5132

SHEET
C054A

AKS DRAWING FILE: 5132 C050 PRE GRADING ESC.DWG | LAYOUT: C054A

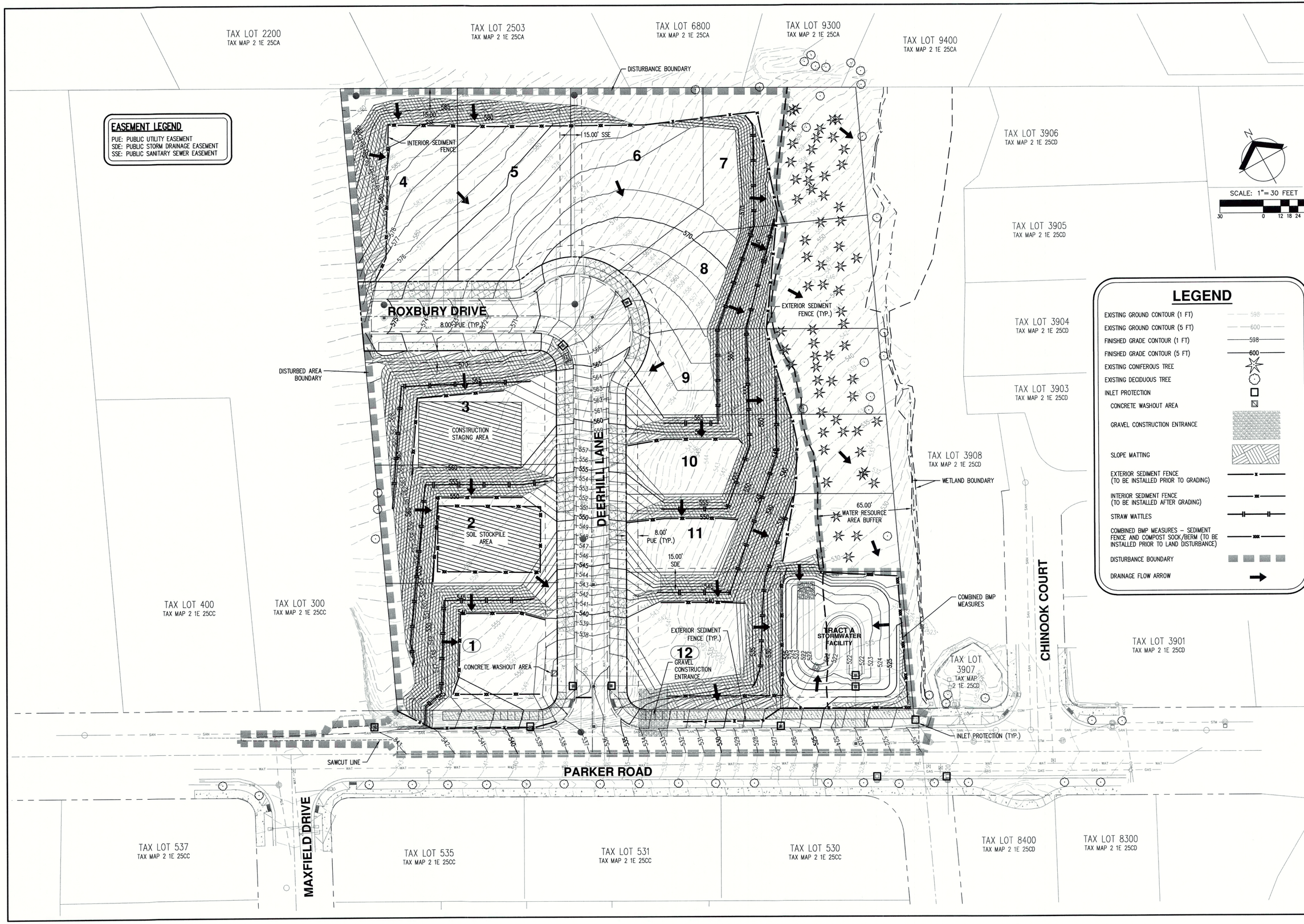

AKS ENGINEERING & FORESTRY, LLC
12965 SW HERMAN RD STE 100
TUALATIN, OR 97062
P: 503.563.6151
F: 503.563.6152
aks-eng.com

AKS

ENGINEERING · SURVEYING · NATURAL RESOURCES
FORESTRY · PLANNING · LANDSCAPE ARCHITECTURE

KNOLLCREST SUBDIVISION

WEST LINN
TAX LOTS 100 & 200

OREGON
CLACKAMAS COUNTY, TAX MAP 2 1E 25CC

GRADING, EROSION AND SEDIMENT CONTROL PLAN

DESIGNED BY:	CLR
DRAWN BY:	NSL/AMF
CHECKED BY:	RSW
SCALE:	AS NOTED
DATE: 07/30/2018	

REGISTERED PROFESSIONAL ENGINEER 58542PE OREGON JULY 9, 2002 MONTGOMERY B. HURLEY
RENEWAL DATE: 6/30/19

REVISIONS

JOB NUMBER
5132

SHEET
C054B

AKS DRAWING FILE: 5132 C050 GRADING ESC.DWG | LAYOUT: C054B

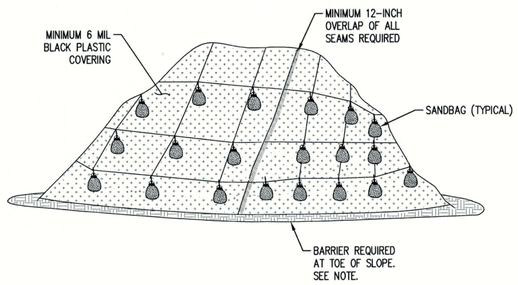

NOTES:
1. COVERING MAINTAINED TIGHTLY IN PLACE BY USING SANDBAGS OR TIRES ON ROPES WITH A MAXIMUM 10' GRID SPACING IN ALL DIRECTIONS.
2. BARRIER SHALL CONSIST OF SOIL BERM, SILT FENCE, STRAW WATTLE, GRASS LINED DITCH, SANDBAGS, OR OTHER APPROVED MATERIAL.
3. STOCKPILE(S) MUST BE LOCATED IN AREAS THAT WILL NOT IMPOUND OR BLOCK STORMWATER RUNOFF.
4. ALL SEAMS SHALL BE TAPED OR WEIGHTED DOWN FOR FULL LENGTH.
5. PLASTIC SHEETING REQUIRED FOR ALL TEMPORARY STOCKPILED MATERIAL.

PLASTIC SHEETING
NTS

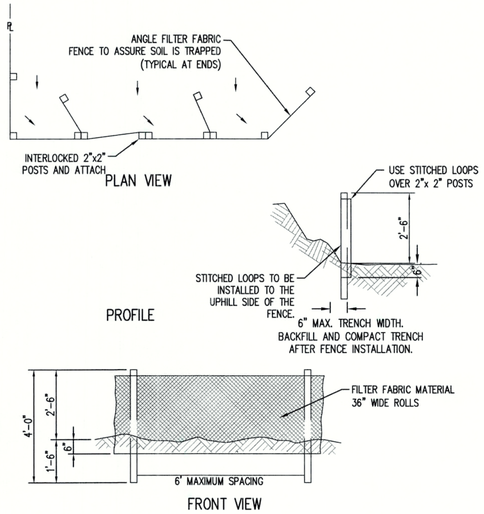

NOTES:
1. BURY BOTTOM OF FILTER FABRIC 6" VERTICALLY BELOW FINISHED GRADE.
2. 2"X 2" FIR, PINE OR STEEL FENCE POSTS. POSTS TO BE INSTALLED ON UPHILL SIDE OF SLOPE.

MAINTENANCE NOTES:
1. SEDIMENT BARRIERS SHALL BE MAINTAINED UNTIL UP-SLOPE AREA IS PERMANENTLY STABILIZED.
2. AT NO TIME SHALL MORE THAN 10 INCHES OF SEDIMENT BE ALLOWED TO ACCUMULATE BEHIND SEDIMENT FENCES.
3. NEW SEDIMENT BARRIERS SHALL BE INSTALLED UPHILL AS REQUIRED TO CONTROL SEDIMENT TRANSPORT.
4. SEDIMENT FENCE MUST BE ADEQUATELY SUPPORTED AS REQUIRED TO CONTROL SEDIMENT TRANSPORT.
5. FENCE SHALL NOT BE STAPLED TO EXISTING TREES.

SEDIMENT FENCE SPECS:
1. SEDIMENT FENCE SHALL BE CONSTRUCTED OF CONTINUOUS FILTER FABRIC TO MINIMIZE USE OF JOINTS.
2. WHEN A JOINT IS REQUIRED, FABRIC SHALL BE SPLICED TOGETHER ONLY AT A SUPPORT POST WITH A MINIMUM 6-INCH OVERLAP AND BOTH ENDS SECURELY FASTENED TO A POST.

SEDIMENT FENCE
NTS

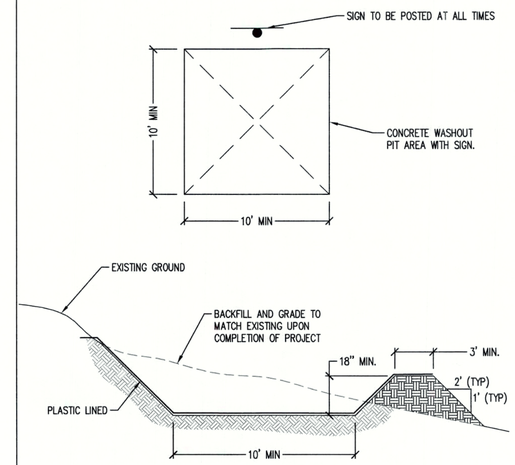

NOTE: CONTRACTOR SHALL TAKE PRECAUTIONS SO AS TO NOT OVERFLOW PIT.

NOTES:
1. REMOVE AND LEGALLY DISPOSE OF WASTE MATERIAL WHEN IT ACCUMULATES TO 2/3 OF WET STORAGE CAPACITY OF PIT.
2. CONCRETE WASHOUT AREA TO BE REPAIRED AND/OR ENLARGED AS NECESSARY TO MAINTAIN CAPACITY FOR CONCRETE.
3. UPON COMPLETION OF CONSTRUCTION ACTIVITIES REQUIRING CONCRETE WASHOUT, THE WASHOUT SHALL BE REMOVED AND THE AREA RESTORED TO FINISH GRADE AND EXISTING CONDITION.

CONCRETE TRUCK WASHOUT
NTS

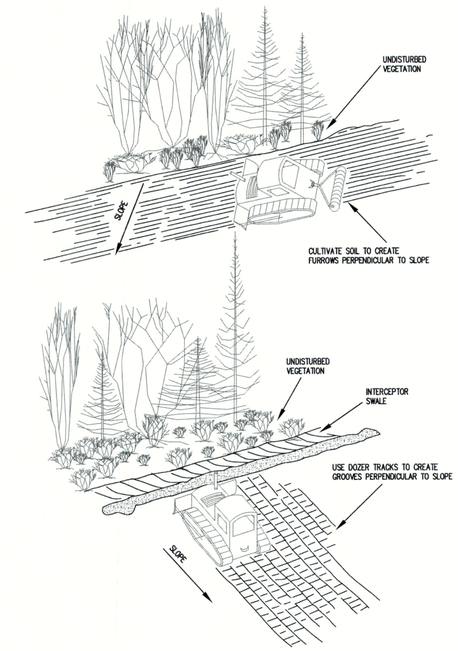

SURFACE ROUGHENING - CAT TRACKING
NTS

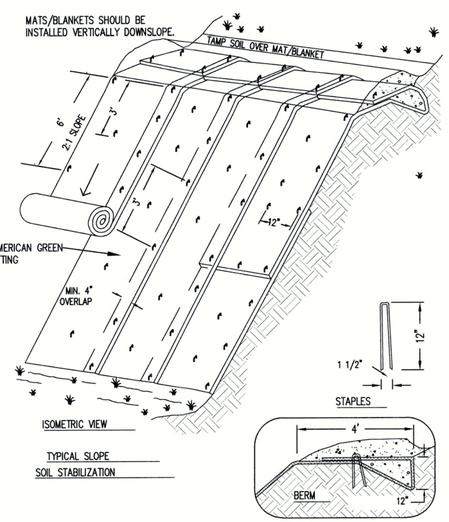

NOTES:
1. SLOPE SURFACE SHALL BE FREE OF ROCKS, CLODS, STICKS AND GRASS. MATS/BLANKETS SHALL HAVE GOOD SOIL CONTACT.
2. APPLY PERMANENT SEEDING BEFORE PLACING BLANKETS.
3. LAY BLANKETS LOOSELY AND STAKE OR STAPLE TO MAINTAIN DIRECT CONTACT WITH THE SOIL. DO NOT STRETCH.
4. STAKING OR STAPLING LAYOUT PER MANUFACTURERS SPECIFICATIONS.

SLOPE MATTING
NTS

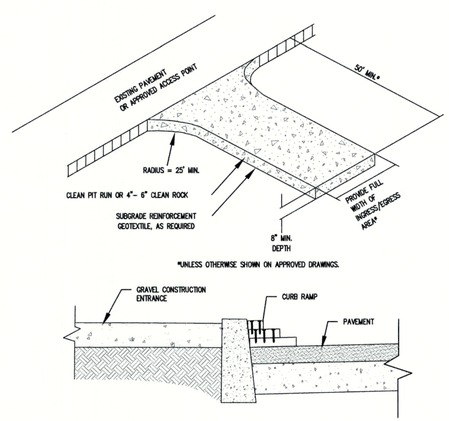

NOTES:
1. THE ENTRANCE SHALL BE MAINTAINED IN A CONDITION THAT WILL PREVENT TRACKING OR FLOWING OF SEDIMENT ONTO PUBLIC RIGHT-OF-WAYS. THIS MAY REQUIRE TOP DRESSING, REPAIR AND/OR CLEAN OUT OF ANY MEASURES USED TO TRAP SEDIMENT.
2. WHEN NECESSARY, WHEELS SHALL BE CLEANED PRIOR TO ENTRANCE ONTO PUBLIC RIGHT-OF-WAY.
3. WHEN WASHING IS REQUIRED, IT SHALL BE DONE ON AN AREA STABILIZED WITH CRUSHED STONE THAT DRAINS INTO AN APPROVED SEDIMENT TRAP OR SEDIMENT BASIN.
4. WHERE RUNOFF CONTAINING SEDIMENT LADEN WATER IS LEAVING THE SITE VIA THE CONSTRUCTION ENTRANCE, OTHER MEASURES SHALL BE IMPLEMENTED TO DIVERT RUNOFF THROUGH AN APPROVED FILTERING SYSTEM.

CONSTRUCTION ENTRANCE
NTS

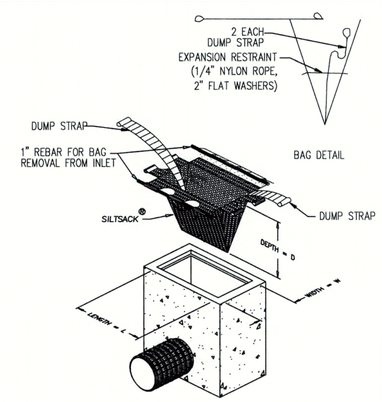

Regular Flow Only
Do not use High Flow Insert Bags.

CATCH BASIN INSERT BAG

NOTES:
1. RECESSED CURB INLET CATCH BASINS MUST BE BLOCKED WHEN USING FILTER FABRIC INLET SACKS. SIZE OF FILTER FABRIC INLET SACKS TO BE DETERMINED BY MANUFACTURER.

INLET PROTECTION DETAIL
NTS

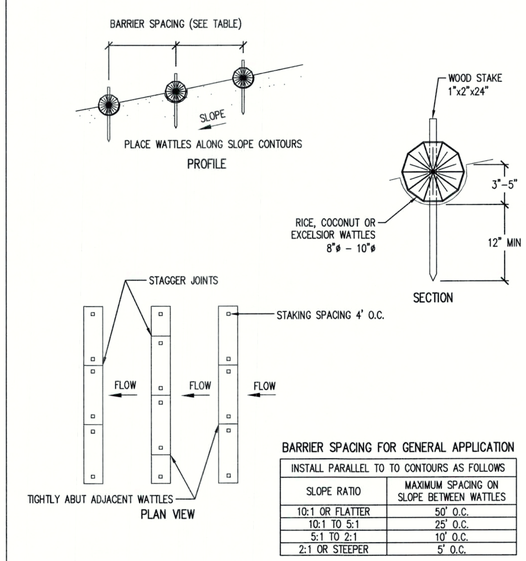

BARRIER SPACING FOR GENERAL APPLICATION

INSTALL PARALLEL TO TO CONTOURS AS FOLLOWS	
SLOPE RATIO	MAXIMUM SPACING ON SLOPE BETWEEN WATTLES
10:1 OR FLATTER	50' O.C.
10:1 TO 5:1	25' O.C.
5:1 TO 2:1	10' O.C.
2:1 OR STEEPER	5' O.C.

NOTES:
1. ALL MATERIAL SHALL CONFORM TO OSSC, CURRENT EDITION.
2. SEDIMENT BARRIERS SHALL BE MAINTAINED UNTIL UP-HILL AREA IS PERMANENTLY STABILIZED.
3. AT NO TIME SHALL SEDIMENT BE ALLOWED TO ACCUMULATE ABOVE THE TOP OF THE STRAW WATTLE.
4. NEW SEDIMENT BARRIERS SHALL BE INSTALLED UPHILL AS REQUIRED TO CONTROL SEDIMENT TRANSPORT.
5. ADDITIONAL STAKES MAY BE INSTALLED ON DOWNHILL SIDE OF WATTLES DUE TO STEEP SLOPES OR HIGHLY EROSIVE SOILS.
6. CONTRACTOR SHALL REMOVE AND HAUL OFF SITE FOR DISPOSAL UPON PROJECT COMPLETION.

STRAW WATTLES
NTS

AKS ENGINEERING & FORESTRY, LLC
12965 SW HERMAN RD STE 100
TUALATIN, OR 97062
P: 503.563.6151
F: 503.563.6152
aks-eng.com

ENGINEERING · SURVEYING · NATURAL RESOURCES
FORESTRY · PLANNING · LANDSCAPE ARCHITECTURE

KNOLLCREST SUBDIVISION
OREGON
CLACKAMAS COUNTY TAX MAP 2 1E 25CC
WEST LINN
TAX LOTS 100 & 200

GRADING, EROSION AND SEDIMENT CONTROL DETAILS

DESIGNED BY:	CLR
DRAWN BY:	NSL/AMF
CHECKED BY:	RSW
SCALE:	AS NOTED

DATE: 07/30/2018

REGISTERED PROFESSIONAL ENGINEER 58542PE OREGON JULY 9, 2002 MONTGOMERY B. HURLEY

RENEWAL DATE: 6/30/19

REVISIONS

JOB NUMBER
5132

SHEET
C055

AKS DRAWING FILE: 5132 DETAILS.DWG | LAYOUT: C055

COMPOST FILTER SOCK

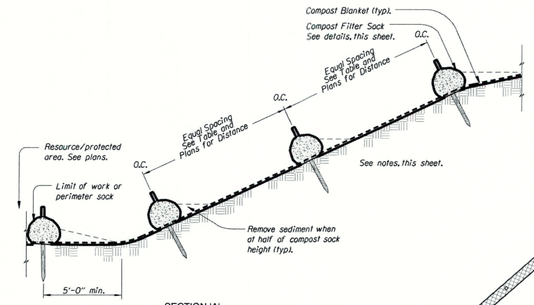

SECTION 'A'
N.T.S.

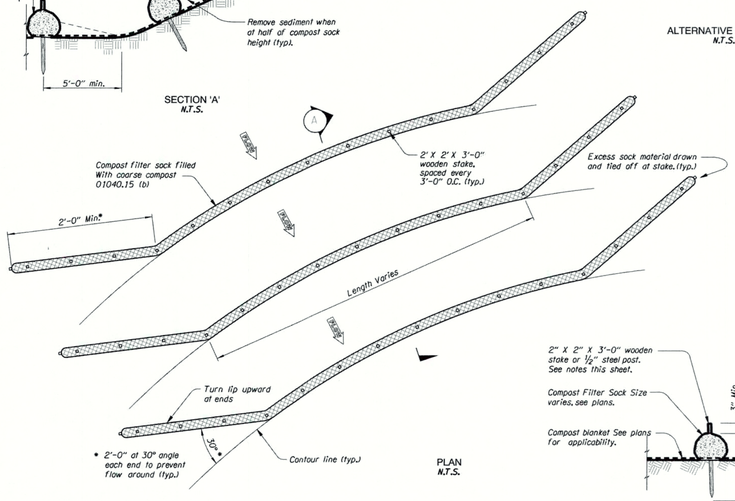

PLAN
N.T.S.

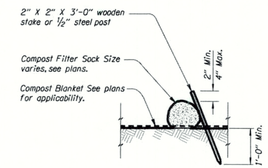

ALTERNATIVE 1 (Staking)
N.T.S.

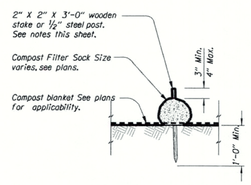

ALTERNATIVE 2 (Staking)
N.T.S.

Compost Filter Sock General Notes

1. Filter socks can be placed at the top, on the face, and at the toe of slopes as sediment-trapping devices for sheet flow runoff and sediment per these notes and compost filter sock details, plans and specifications. See Section 00280, Oregon Standard Specifications.

2. Place filter socks on slopes along or on the ground contour. Filter socks applied at toe of a slope should be placed at minimum, 5 feet from toe to provide sediment storage. The maximum drainage area is ¼ acre per 100 LF of 12 inch diameter filter sock.

3. For ditch applications, maximum drainage area shall be 15 acres. At sites which outfall to high-quality or sediment-impaired streams, maximum drainage area shall be limited to 10 acres. Compost filter socks shall not be used in streams, wetlands, or other natural water resources unless directed by Agency. Compost filter socks shall not be used in ditches with continuous flows.

4. For ditch applications, minimum installed height of single sock nominally. Socks are placed perpendicular to flow of water. Filter socks shall continue up side slopes to top of bank or maximum 3 feet above installed height. Filter socks shall remain in place until all upstream areas are permanently stabilized and remain at Agency discretion.

5. Filter socks are typically supplied and installed in 8, 12, 18, or 24 inch diameters. Diameter tolerance is 2 inches, as filter socks tend to flatten out when placed

6. Steel posts may be used and shall be rolled from high carbon steel and have a minimum of 1.25 lb/ft. Posts shall be hot-dipped galvanized or painted with high-grade weather resistant brown or black steel paint. Steel posts shall be equipped with anchor plate having a minimum area of 14 square inches. Posts shall be studded, embossed, or punched. Posts and anchor plates shall conform to the requirements of ASTM A702.

7. Live stakes can be used in addition to wooden stakes and shall be in accordance with project specifications and plans. See plans for applicability and species selection and spacing.

8. Filter socks are filled at project site and may be up to 250 feet long. When used on long slopes, filter socks may be jointed or staggered as shown in details.

9. Remove sediment from behind the filter sock once it accumulates to one-half of the original height of the filter sock.

10. Inspect filter socks after each runoff event. Remove and replace if signs of undercutting or downstream rills are observed.

11. Filter socks should be removed from slopes after stabilization is complete, unless directed to leave in place by Agency.

12. Removal shall be accomplished by cutting sock open and spreading the fill material on the site. All non-biodegradable materials shall be removed. Filter socks applied in ditches shall be completely removed once vegetation is established or as directed otherwise by Agency.

The selection and use of this detail, while designed in accordance with generally accepted engineering principles and practices, is the sole responsibility of the user and should not be used without consulting a Registered Professional Engineer.

OREGON DEPARTMENT OF TRANSPORTATION
TECHNICAL SERVICES
DETAILS

COMPOST FILTER SOCK
PLAN AND STAKING

DETAIL NO.
DET6013

DET6013

24-Aug-2011

det6013.dgn

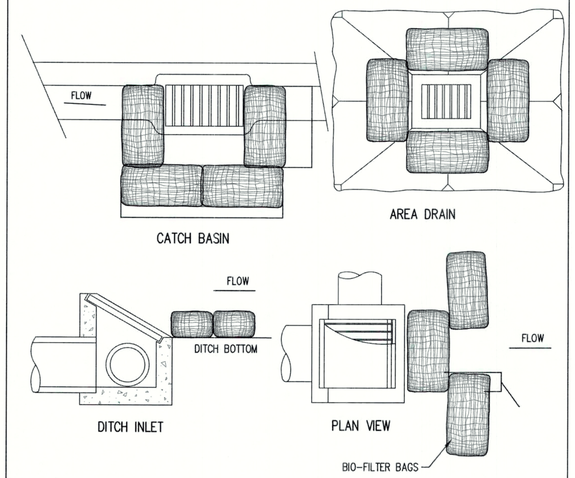

NOTES:
1. ADDITIONAL MEASURES MUST BE CONSIDERED DEPENDING ON SOIL TYPES.
2. BIO-FILTER BAGS SHOULD BE STAKED WHERE APPLICABLE USING (2) 1"x2"x3' WOOD STAKES OR APPROVED EQUAL PER BAG.
3. WHEN USING 30" BIO-BAGS TO PROTECT A CATCH BASIN, 4 BAGS SHALL BE USED AND OVERLAPPED BY 6" MINIMUM.
4. BIO-FILTER BAGS MUST BE REMOVED AND HAULED OFF-SITE FOR DISPOSAL BY THE CONTRACTOR UPON PROJECT STABILIZATION.
5. BIO-FILTER BAGS MAY BE USED SHORT TERM WITH UTILITY WORK AND WITH PHASING OF DEVELOPMENT.

MAINTENANCE NOTES:
1. SEDIMENT BARRIERS SHALL BE MAINTAINED UNTIL UPHILL AREA AS PERMANENTLY STABILIZED.
2. AT NO TIME SHALL MORE THAN 2-INCHES OF SEDIMENT BE ALLOWED TO ACCUMULATE BEHIND BIO-FILTER BAGS.
3. NEW SEDIMENT BARRIERS SHALL BE INSTALLED UPHILL AS REQUIRED TO CONTROL SEDIMENT TRANSPORT.

INLET PROTECTION (BIO-FILTER BAG)
NTS

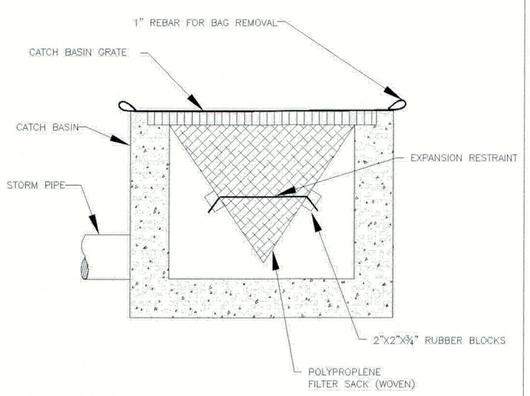

WOVEN POLYPROPLENE SACK

NOTE:
1. RECESSED CURB INLET CATCH BASINS MUST BE BLOCKED WHEN USING FILTER FABRIC INLET SACKS. SIZE OF FILTER FABRIC INLET SACKS TO BE DETERMINED BY MANUFACTURER.

INLET PROTECTION TYPE 5

DETAIL DRAWING 4-19 REVISED 01-09

AKS ENGINEERING & FORESTRY, LLC
12965 SW HERMAN RD STE 100
TUALATIN, OR 97062
P: 503.563.6151
F: 503.563.6152
aks-eng.com

ENGINEERING · SURVEYING · NATURAL RESOURCES
FORESTRY · PLANNING · LANDSCAPE ARCHITECTURE

KNOLLCREST SUBDIVISION
WEST LINN OREGON
TAX LOTS 100 & 200 CLACKAMAS COUNTY TAX MAP 2 1E 25CC

GRADING, EROSION AND SEDIMENT CONTROL DETAILS

DESIGNED BY:	CLR
DRAWN BY:	NSL/AMF
CHECKED BY:	RSW
SCALE:	AS NOTED

DATE: 07/30/2018

REGISTERED PROFESSIONAL ENGINEER 58540PE OREGON JULY 9, 2002 MONTGOMERY B. HURLEY

RENEWAL DATE: 6/30/19

REVISIONS

JOB NUMBER
5132

SHEET
C056

AKS DRAWING FILE: 5132 DETAILS.DWG | LAYOUT: C056

KNOLLCREST SUBDIVISION

STREET CONSTRUCTION PLANS

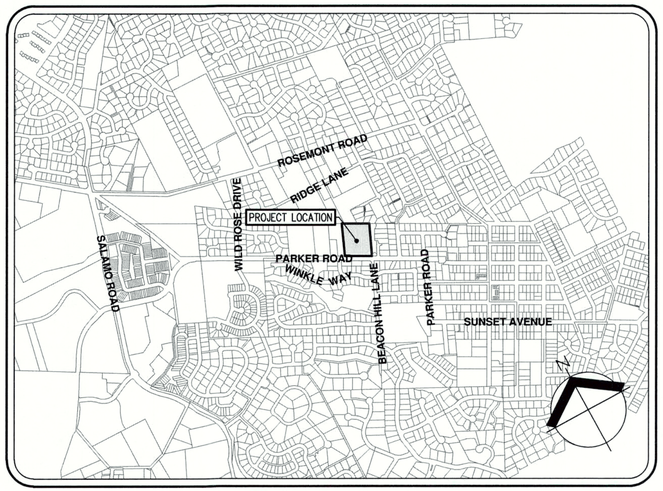

VICINITY MAP

SCALE: 1" = 500'

STREET CONSTRUCTION NOTES

1. ALL STREET WORK AND MATERIALS SHALL CONFORM WITH THESE PLANS AND THE APPLICABLE REQUIREMENTS OF THE CITY OF WEST LINN AND THE OREGON DEPARTMENT OF TRANSPORTATION (INCLUDING STANDARD DRAWINGS AND STANDARD SPECIFICATIONS).
2. ALL EMBANKMENT SHALL BE STRUCTURAL FILL AND SHALL MEET THE REQUIREMENTS OF THE PROJECT'S GEOTECHNICAL ENGINEER AND THE CITY OF WEST LINN. THE MINIMUM COMPACTION SHALL BE 95% PER AASHTO T-99 (ASTM D698).
3. TRENCH BACKFILL WITHIN THE RIGHT-OF-WAY: AFTER THE CONTRACTOR HAS BACKFILLED THE PIPE ZONE OF THE TRENCH AS REQUIRED, THE CONTRACTOR SHALL THEN BACKFILL THE BALANCE OF THE TRENCH, WITH ODOT CLASS "B" (3/4"-0") BACKFILL, IN ONE FOOT (1') LAYERS, MECHANICALLY COMPACTING EACH LAYER TO 95% IN STREETS AND 85% IN OTHER AREAS PER AASHTO T-99. IN PLACE DENSITY SHALL BE DETERMINED PER AASHTO T-191, T-205, OR T-238. ANY SUBSEQUENT SETTLEMENT OF THE TRENCH OR DITCH DURING THE GUARANTEE PERIOD SHALL BE CONSIDERED TO BE THE RESULT OF IMPROPER COMPACTION AND SHALL BE PROMPTLY CORRECTED BY THE CONTRACTOR.
4. BASE ROCK SHALL BE COMPACTED TO 95% PER AASHTO T-99.
5. ASPHALTIC CONCRETE IN VEHICULAR TRAFFIC AREAS SHALL BE COMPACTED TO A DENSITY OF 92% (FOR ALL LIFTS) OF THE THEORETICAL MAXIMUM DENSITY PER AASHTO T 209.
6. CYLINDER TESTS SHALL BE PROVIDED FOR CONCRETE CURB AND GUTTER (1), SIDEWALK (1), DRIVEWAYS (1). CONCRETE SHALL HAVE A MINIMUM COMPRESSIVE STRENGTH OF 3300 PSI IN 28 DAYS, 2" TO 4" SLUMP.
7. NUMBER AND LOCATION OF COMPACTION TESTS FOR BASE ROCK AND ASPHALTIC CONCRETE SHALL BE DETERMINED BY THE GEOTECHNICAL ENGINEER.
8. DRY UTILITIES CONDUIT CROSSINGS ARE TO BE ELECTRICAL GRADE SCHEDULE 40 PVC OR AS SPECIFIED BY THE APPLICABLE PRIVATE CARRIER AND SHALL BE EXTENDED TO 8' PAST RIGHT-OF-WAY LINES WITH A MINIMUM 36" OF COVER.
9. STREET LIGHTING SHALL BE IN ACCORDANCE WITH THE STREET LIGHT PLAN PROVIDED BY PORTLAND GENERAL ELECTRIC.
10. ALL MANHOLE LIDS, VALVE BOXES, AND MONUMENT BOXES SHALL BE ADJUSTED TO FINISHED GRADE.
11. THE CONTRACTOR SHALL PROVIDE AND MAINTAIN ADEQUATE TRAFFIC CONTROL ALONG THE EXISTING ROADS AS REQUIRED BY THE CITY OF WEST LINN.
12. STREET STATIONING IS BASED ON CENTERLINE, UNLESS OTHERWISE NOTED.
13. IN ADDITION TO REQUIRED COMPACTION TESTING, THE PROJECT ENGINEER REQUIRES A PROOF ROLL WITH A FULLY LOADED DUMP TRUCK OR WATER TRUCK TO CHECK SUBGRADE COMPACTION PRIOR TO PLACEMENT OF CURB, AND PRIOR TO PAVING THE FIRST LIFT OF ASPHALT. CONTRACTOR SHALL CONTACT GEOTECHNICAL ENGINEER, CITY, AND PROJECT ENGINEER TO SCHEDULE INSPECTION OF THE PROOF ROLL.
14. MATERIAL IN SOFT SPOTS WITHIN THE ROADWAY SHALL BE REMOVED TO THE DEPTH REQUIRED TO PROVIDE A FIRM FOUNDATION AND SHALL BE REPLACED WITH 1-1/2"-0" CRUSHED ROCK. THE ENTIRE REPLACEMENT AREA SHALL BE COMPACTED TO 95% PER AASHTO T-99.
15. SAWCUT STRAIGHT LINES WITH CLEAN EDGES TO MEET EXISTING PAVEMENT WITH NEW PAVEMENT. SAND AND SEAL JOINTS.
16. FINAL SAWCUT LINE LOCATION SHALL BE VERIFIED BY THE CITY OR PROJECT ENGINEER PRIOR TO SAWCUTTING. FINAL SAWCUT LINES SHALL BE INSPECTED BY THE CITY OR PROJECT ENGINEER PRIOR TO PAVING.
17. REMOVE ALL EXISTING ASPHALT WITHIN SAWCUT BOUNDARY. DISPOSE OFFSITE AT AN APPROVED LOCATION.
18. FIELD GRADE WHERE MATCHING EXISTING AC PAVEMENT TO ENSURE POSITIVE DRAINAGE AND SMOOTH TRANSITION.
19. AREAS WITHIN THE LIMITS OF THE NEW PAVEMENT SHALL BE STRIPPED OF SOD, TOP SOIL, AND OTHER NON-STRUCTURAL MATERIAL.
20. MATERIALS AND PLACEMENT OF THE HOT MIXED ASPHALT CONCRETE (HMAC) SHALL CONFORM TO THE REQUIREMENTS DELINEATED IN SECTION 00745 – HOT MIXED ASPHALT CONCRETE (HMAC) PAVEMENT, OF THE ODOT/APWA, OREGON STANDARD SPECIFICATIONS FOR CONSTRUCTION (LATEST EDITION), EXCEPT AS MODIFIED BY CITY ENGINEER.
21. CRUSHED AGGREGATE USED FOR BASE ROCK AND LEVELING COURSE SHALL CONFORM TO THE REQUIREMENTS DELINEATED IN SECTION 02630 – BASE AGGREGATE, OF THE CITY OF WEST LINN PUBLIC WORKS STANDARDS.
22. GEOTEXTILE FABRIC USED OVER SUBGRADE SHALL CONFORM TO THE REQUIREMENTS DELINEATED IN SECTION 2320-GEOSYNTHETICS, TABLE 2320-4, OF THE ODOT/APWA, OREGON STANDARD SPECIFICATIONS FOR CONSTRUCTION.
23. THE CONTRACTOR SHALL BE RESPONSIBLE FOR MAKING THE NECESSARY ARRANGEMENTS FOR COMPACTION TESTING AND FOR SUPPLYING THE RESULTS TO THE PROJECT ENGINEER.
24. PROJECT ENGINEER AND CITY REPRESENTATIVE SHALL REVIEW ALL CURB STRING LINE, CURB, WHEELCHAIR RAMP, CURB RETURN, AND DRIVEWAY FORMS PRIOR TO POURING. CONTRACTOR SHALL COORDINATE.
25. ROAD SUBGRADE SHALL BE COMPETENT NATIVE SOIL (CUT) OR STRUCTURAL FILL COMPACTED TO 95% PER AASHTO T-99, AND ENTIRE SUBGRADE WILL NEED TO BE APPROVED BY GEOTECHNICAL ENGINEER.
26. PLANTER AREAS TO BE BACKFILLED WITH CLEAN DIRT/TOP SOIL. ALL ASPHALT, CONCRETE, STICKS, AND OTHER MATERIAL TO BE REMOVED PRIOR TO BACKFILLING. SEE CITY OF WEST LINN STANDARDS 501.03.02.

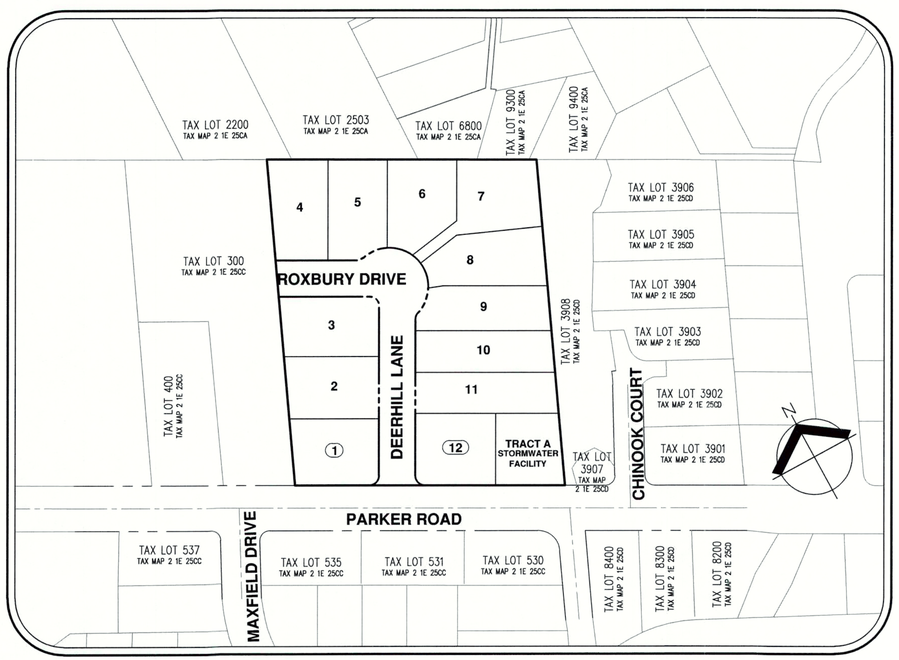

SITE MAP

SCALE: 1" = 100'

SHEET INDEX

C100 STREET CONSTRUCTION PLANS COVER SHEET
C101 STREET CROSS SECTIONS
C102 STREET OVERVIEW
C103 PARKER ROAD PLAN AND PROFILE
C104 DEERHILL LANE – ROXBURY DRIVE PLAN AND PROFILE
C105 CURB RETURN INFORMATION (1 & 2)
C106 CURB RETURN INFORMATION (3, 4, & 5)
C107 STREET CONSTRUCTION DETAILS
C108 STREET CONSTRUCTION DETAILS
C109 SIGNING AND STRIPING PLAN
C110 SIGNING AND STRIPING DETAILS
C111 STREET LIGHTING PLAN

AKS ENGINEERING & FORESTRY, LLC
12965 SW HERMAN RD STE 100
TUALATIN, OR 97062
P: 503.563.6151
F: 503.563.6152
aks-eng.com

ENGINEERING · SURVEYING · NATURAL RESOURCES
FORESTRY · PLANNING · LANDSCAPE ARCHITECTURE

KNOLLCREST SUBDIVISION
WEST LINN OREGON
TAX LOTS 100 & 200
CLACKAMAS COUNTY TAX MAP 2 1E 25CC

STREET CONSTRUCTION PLANS COVER SHEET

DESIGNED BY:	CLR
DRAWN BY:	NSL/AMF
CHECKED BY:	RSW
SCALE:	AS NOTED
DATE: 07/30/2018	

REGISTERED PROFESSIONAL ENGINEER 58542PE OREGON JULY 9, 2013 MONTGOMERY B. HURLEY
RENEWAL DATE: 6/30/19

REVISIONS

JOB NUMBER 5132

SHEET C100

AKS DRAWING FILE: 5132 C000 COVER.DWG | LAYOUT: C100

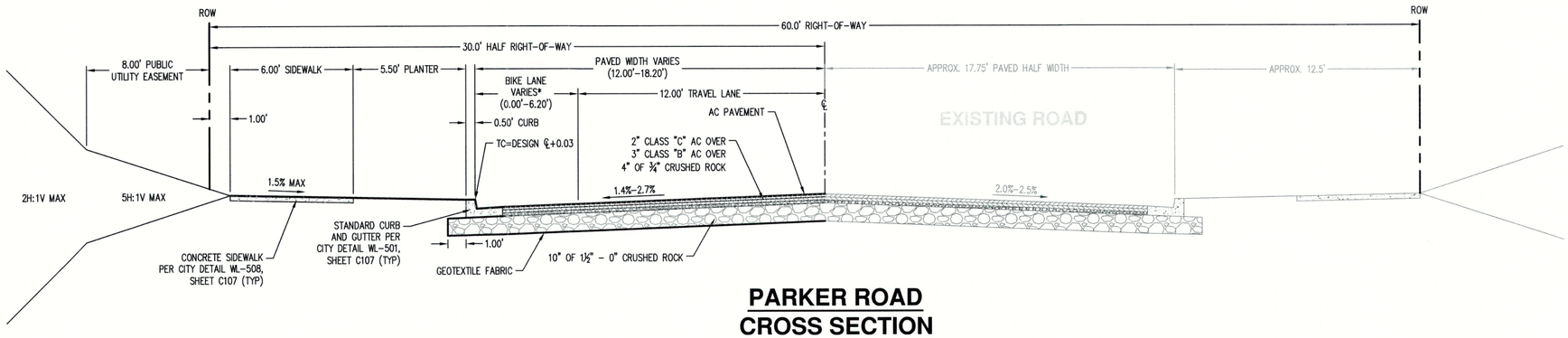

PARKER ROAD
CROSS SECTION

STA 9+98.58 TO STA 14+33.81

NOT TO SCALE

NOTE: STA 11+71.28 TO STA 12+45.28: INTERSECTION OF PARKER ROAD AND DEERHILL LANE
* STA 9+65.67 TO STA 10+73.67: BIKE LANE WIDTH TAPERS FROM 0.00' TO 5.00'
STA 10+73.67 TO STA 14+08.81: BIKE LANE WIDTH EQUAL TO 5.00'
STA 14+08.81 TO STA 14+33.81: BIKE LANE WIDTH TAPERS FROM 5.00' TO 6.20'

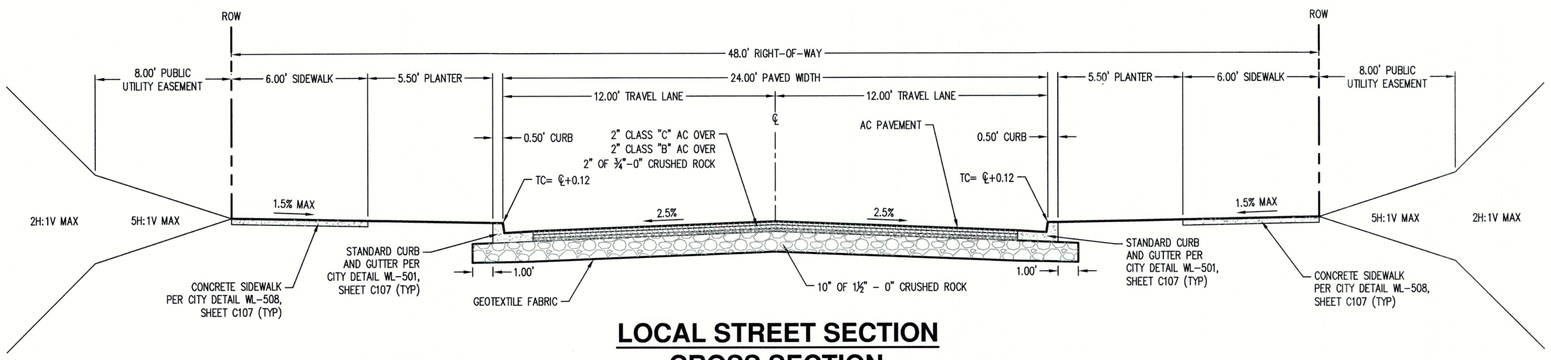

LOCAL STREET SECTION
CROSS SECTION

DEERHILL LANE
STA 10+00.00 TO STA 12+95.06

ROXBURY DRIVE
STA 12+95.06 TO STA 14+38.76

NOT TO SCALE

AKS ENGINEERING & FORESTRY, LLC
12965 SW HERMAN RD STE 100
TUALATIN, OR 97062
P: 503.563.6151
F: 503.563.6152
aks-eng.com

AKS
ENGINEERING · SURVEYING · NATURAL RESOURCES
FORESTRY · PLANNING · LANDSCAPE ARCHITECTURE

KNOLLCREST SUBDIVISION
WEST LINN OREGON
TAX LOTS 100 & 200 CLACKAMAS COUNTY TAX MAP 2 1E 25CC

STREET CROSS SECTIONS

DESIGNED BY:	CLR
DRAWN BY:	NSL/AMF
CHECKED BY:	RSW
SCALE:	AS NOTED

DATE: 07/30/2018

REGISTERED PROFESSIONAL ENGINEER 58542PE OREGON JULY 9, 2002 MONTGOMERY B. HURLEY
RENEWAL DATE: 6/30/19

REVISIONS

JOB NUMBER
5132

SHEET
C101

AKS DRAWING FILE: 5132 C100 STREET.DWG | LAYOUT: C101

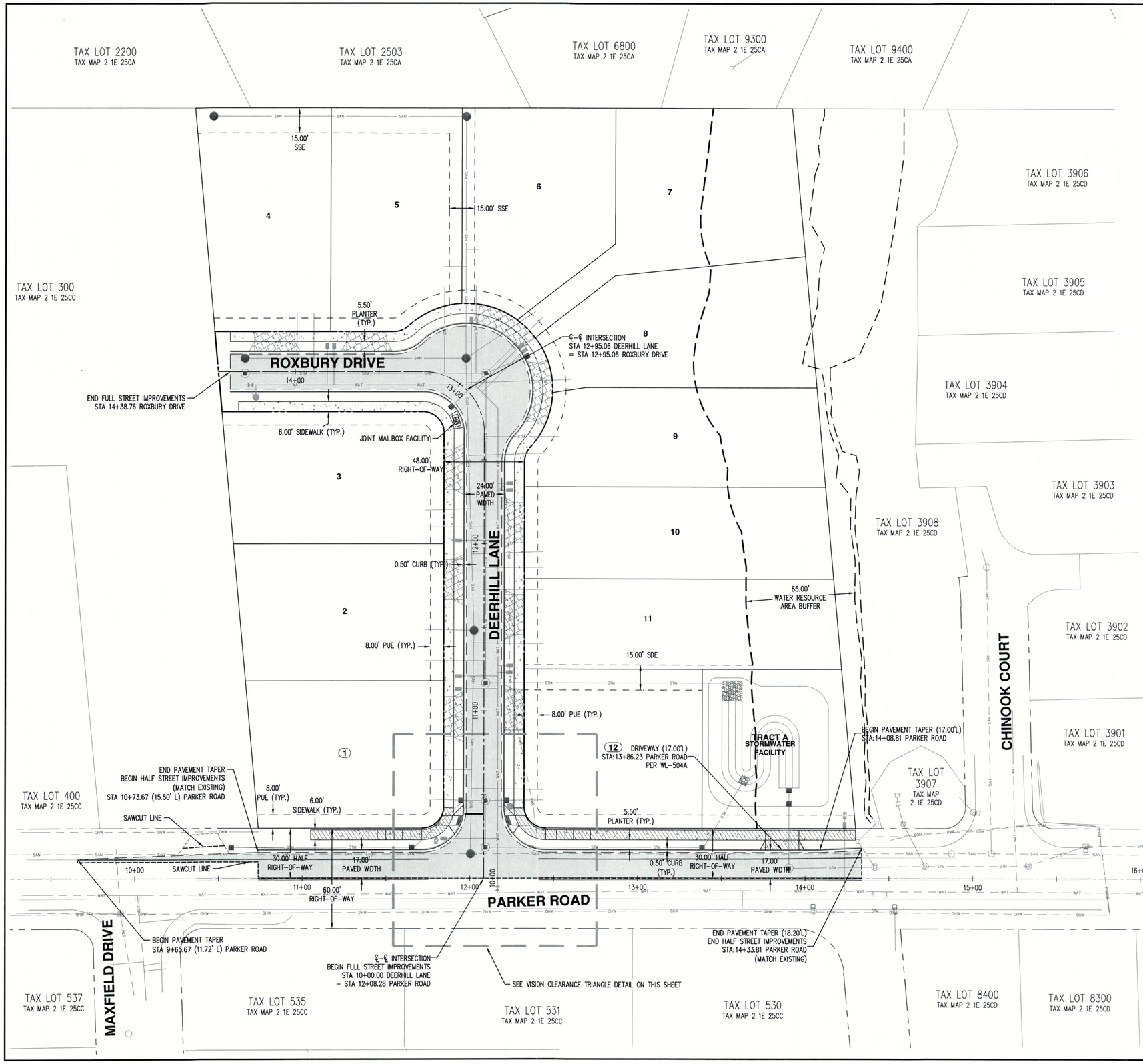

VISION CLEARANCE TRIANGLE DETAIL

SCALE: 1" = 20'

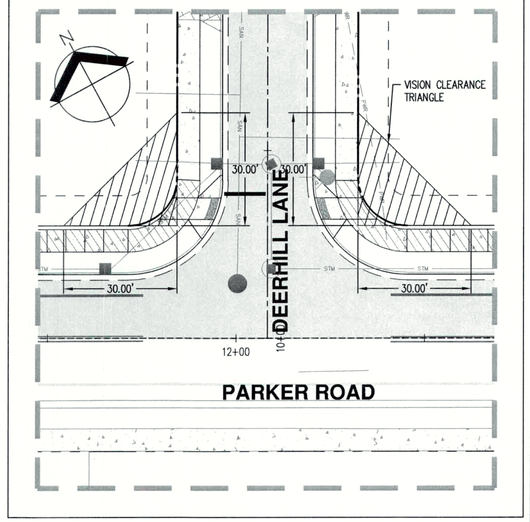

EASEMENT LEGEND

PUE: PUBLIC UTILITY EASEMENT
SDE: PUBLIC STORM DRAINAGE EASEMENT
SSE: PUBLIC SANITARY SEWER EASEMENT

LEGEND

NEW AC PAVEMENT

CONCRETE SIDEWALK AND PLANTER STRIP LANDSCAPING TO BE CONSTRUCTED BY HOMEBUILDER

CONCRETE SIDEWALK AND PLANTER STRIP LANDSCAPING TO BE CONSTRUCTED BY CONTRACTOR

CONCRETE DRIVEWAY TO BE CONSTRUCTED BY THE HOMEBUILDER

SAWCUT LINE

DRIVEWAY CENTERLINE STATION

LOT #	STATION	ALIGNMENT	WIDTH
1	10+96.51	DEERHILL LANE	24'
2	11+78.50	DEERHILL LANE	24'
3	12+44.50	DEERHILL LANE	24'
4	14+12.33	ROXBURY DRIVE	24'
5	13+57.38	ROXBURY DRIVE	24'
6/7	12+99.72	ROXBURY DRIVE	30'
8/9	12+79.34	DEERHILL LANE	30'
10	12+12.50	DEERHILL LANE	24'
11	11+57.50	DEERHILL LANE	24'
12	11+00.50	DEERHILL LANE	24'
STORMWATER FACILITY	13+98.81	PARKER ROAD	26'

RESIDENTIAL DRIVEWAYS SHOWN SHALL BE CONSTRUCTED BY THE HOMEBUILDERS. FINAL DRIVEWAY LOCATIONS SHALL BE DETERMINED BY HOMEBUILDER AND ARE SUBJECT TO CHANGE.

SCALE: 1"=30 FEET

30 0 12 18 24 30

AKS ENGINEERING & FORESTRY, LLC
12965 SW HERMAN RD STE 100
TUALATIN, OR 97062
P: 503.563.6151
F: 503.563.6152
aks-eng.com

AKS

ENGINEERING · SURVEYING · NATURAL RESOURCES
FORESTRY · PLANNING · LANDSCAPE ARCHITECTURE

KNOLLCREST SUBDIVISION

WEST LINN
TAX LOTS 100 & 200

OREGON
CLACKAMAS COUNTY TAX MAP 2 1E 25CC

STREET OVERVIEW

DESIGNED BY: CLR
DRAWN BY: NSL/AMF
CHECKED BY: RSW
SCALE: AS NOTED
DATE: 07/30/2018

REGISTERED PROFESSIONAL ENGINEER
58540PE
OREGON
JULY 9, 2002
MONTGOMERY B. HURLEY
RENEWAL DATE: 6/30/19

REVISIONS

JOB NUMBER
5132

SHEET
C102

AKS DRAWING FILE: 5132 C100 STREET.DWG | LAYOUT: C102

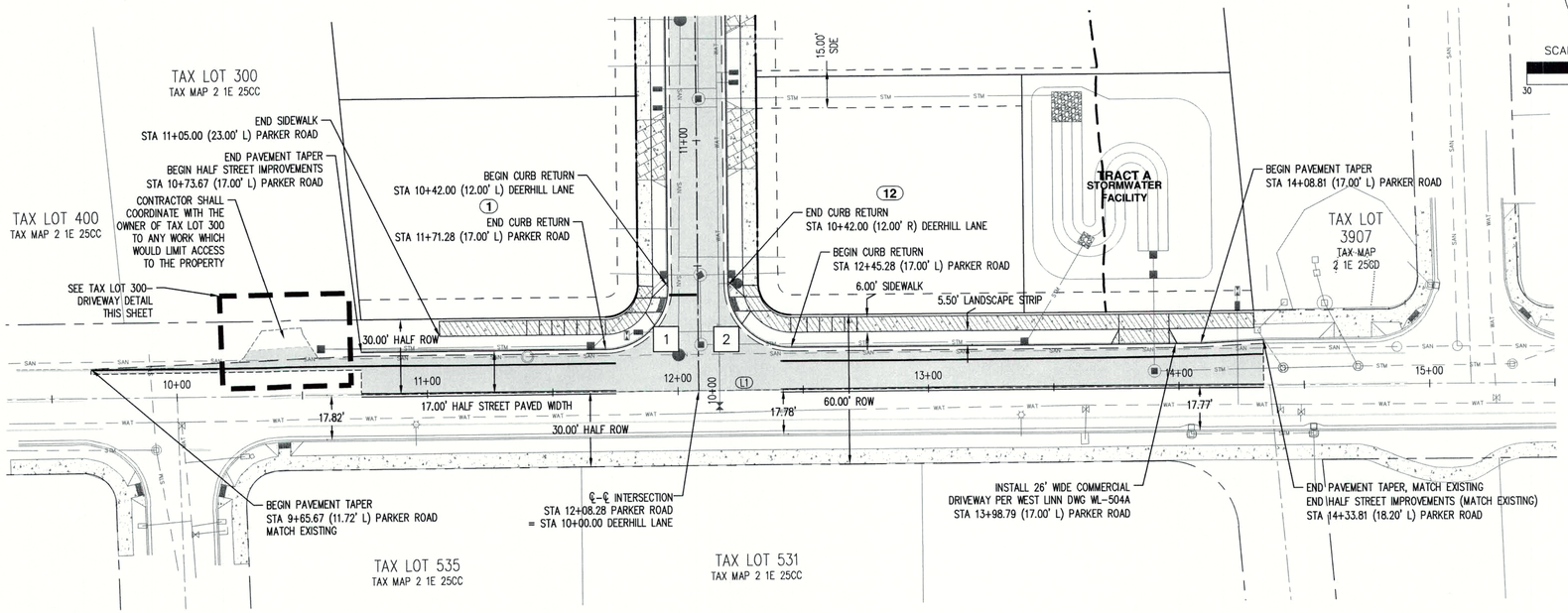

SCALE: 1"= 30 FEET

PARKER ROAD – CENTERLINE ALIGNMENT TABLE							
CURVE/TANGENT	BEGIN STATION	RADIUS	LENGTH	DELTA	CHORD	TANGENT/CHORD BEARING	END STATION
L1	7+82.14		888.40'			S61°17'23"E	16+70.54

EASEMENT LEGEND

PUE: PUBLIC UTILITY EASEMENT
SDE: PUBLIC STORM DRAINAGE EASEMENT
SSE: PUBLIC SANITARY SEWER EASEMENT

STREET CONSTRUCTION NOTES:

1. CONTRACTOR SHALL CONSTRUCT CURB RAMPS PER CITY DETAIL WL-507B, SHEET C107, UNLESS OTHERWISE NOTED.
2. CONTRACTOR SHALL INSTALL SIDEWALK PER CITY DETAIL WL-508, SHEET C107, UNLESS NOTED OTHERWISE.
3. CONTRACTOR SHALL INSTALL TYPICAL CURB AND GUTTER PER CITY DETAIL WL-501, SHEET C107 UNLESS NOTED OTHERWISE.
4. DRY UTILITY CROSSINGS SHALL BE PLACED PRIOR TO PROOF ROLL TEST FOR CURB INSTALLATION. THE NUMBER OF CROSSINGS, EXACT LOCATION, DEPTH, CONDUIT TYPE, ETC. SHALL BE SPECIFIED BY THE PRIVATE UTILITY CARRIERS. CONTRACTOR SHALL COORDINATE.
5. CONTRACTOR SHALL INSTALL CENTERLINE SURVEY MONUMENT BOXES PER DETAILS WL-513A, WL-513-B, AND WL-513C ON SHEET C108 AT ALL INTERSECTIONS, PCS, AND PTS.
6. EXISTING UTILITIES SHALL BE RELOCATED (IF REQUIRED). CONTRACTOR SHALL COORDINATE.
7. SEE SHEETS C109 – C110 FOR SIGNING AND STRIPING PLAN AND DETAILS.

CURB RETURN DATA

1	SEE SHEET C105
2	SEE SHEET C105

LEGEND

NEW AC PAVEMENT

CONCRETE SIDEWALK AND PLANTER STRIP LANDSCAPING TO BE CONSTRUCTED BY HOMEBUILDER

CONCRETE SIDEWALK AND PLANTER STRIP LANDSCAPING TO BE CONSTRUCTED BY CONTRACTOR

CONCRETE DRIVEWAY TO BE CONSTRUCTED BY THE HOMEBUILDER

SAWCUT LINE

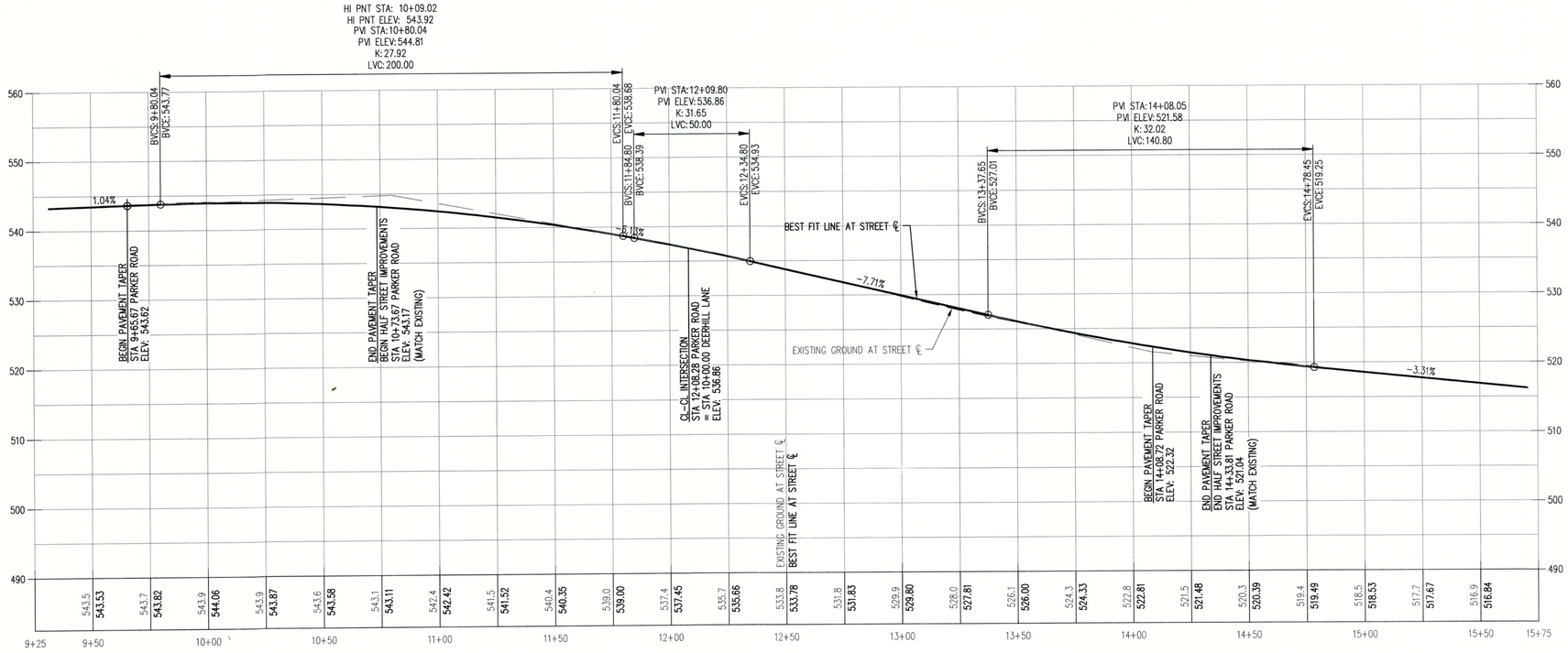

PARKER ROAD
Hor. Scale: 1"= 30'
Vert. Scale: 1"= 10'

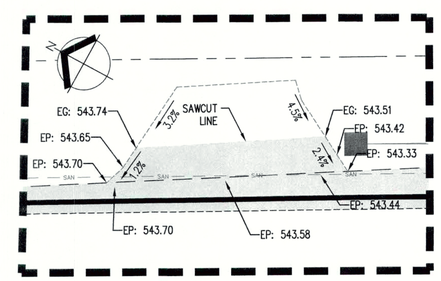

TAX LOT 300–DRIVEWAY DETAIL
SCALE 1"=10'

AKS ENGINEERING & FORESTRY, LLC
12965 SW HERMAN RD STE 100
TUALATIN, OR 97062
P: 503.563.6151
F: 503.563.6152
aks-eng.com

ENGINEERING · SURVEYING · NATURAL RESOURCES
FORESTRY · PLANNING · LANDSCAPE ARCHITECTURE

KNOLLCREST SUBDIVISION

WEST LINN OREGON
TAX LOTS 100 & 200
CLACKAMAS COUNTY TAX MAP 2 1E 25CC

PARKER ROAD PLAN AND PROFILE

DESIGNED BY: CLR
DRAWN BY: NSL/AMF
CHECKED BY: RSW
SCALE: AS NOTED
DATE: 07/30/2018

REGISTERED PROFESSIONAL ENGINEER 58542PE OREGON JULY 9, 2012 MONTGOMERY B. HURLEY
RENEWAL DATE: 6/30/19

REVISIONS

JOB NUMBER
5132

SHEET
C103

AKS DRAWING FILE: 5132 C100 PARKER.DWG | LAYOUT: C103

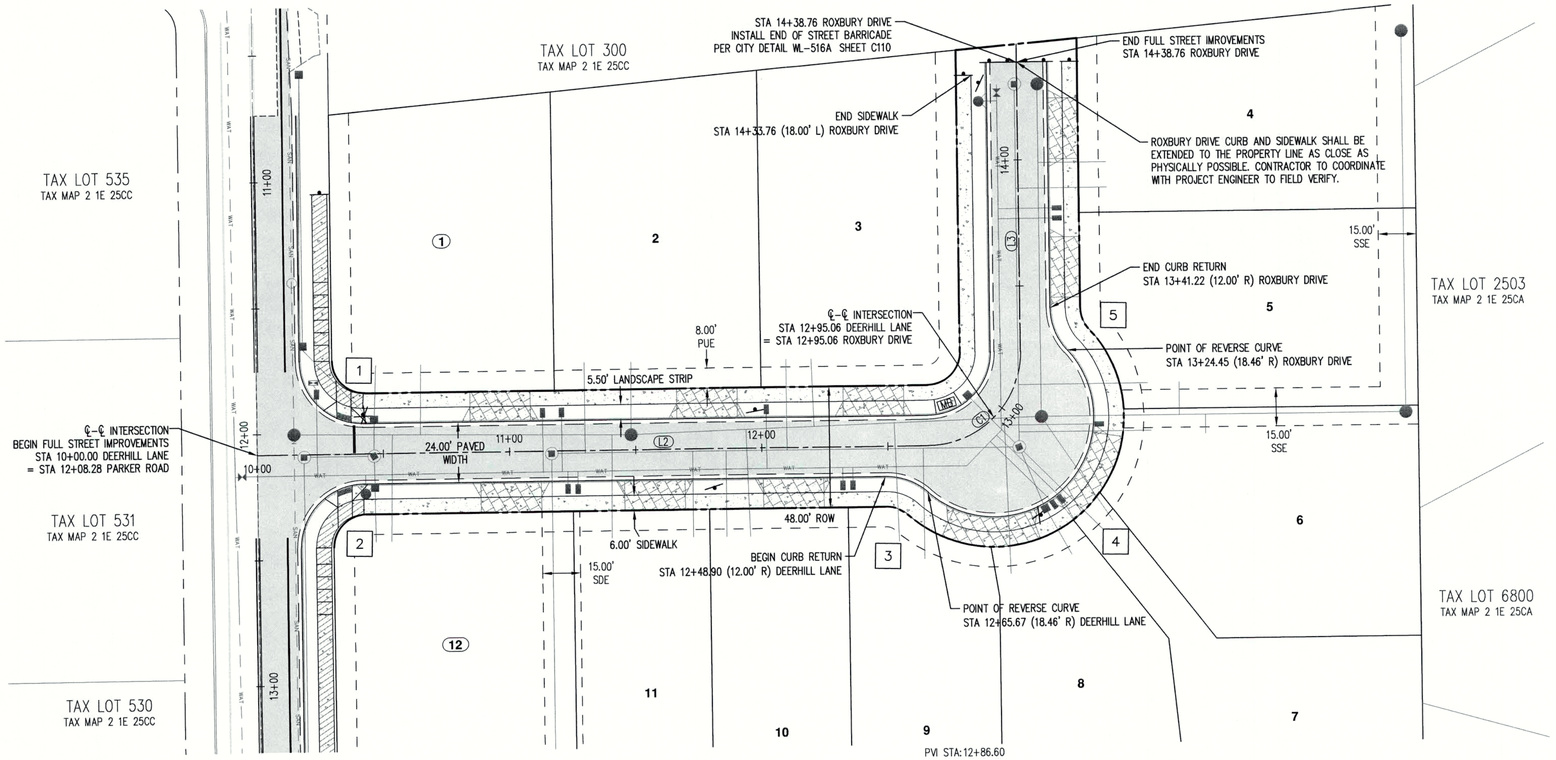

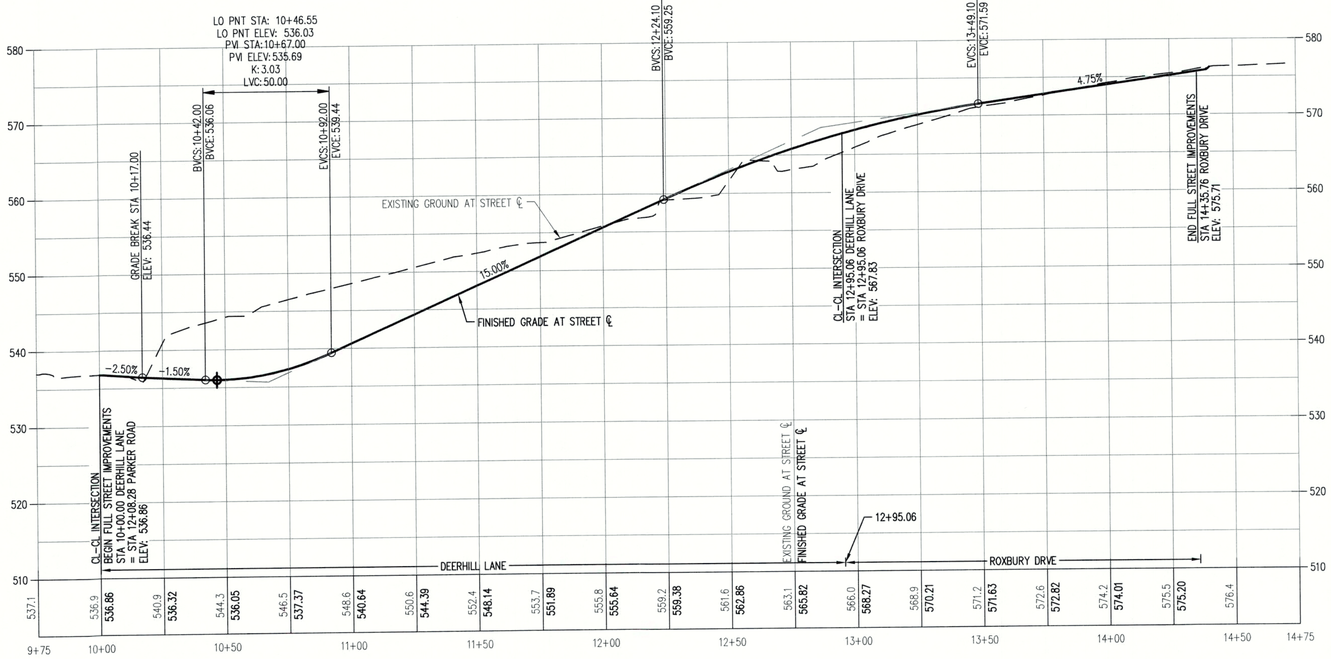

DEERHILL LANE/ ROXBURY DRIVE
Hor. Scale: 1"= 30'
Vert. Scale: 1"= 10'

SCALE: 1"= 30 FEET

30 0 12 18 24 30

DEERHILL LANE – CENTERLINE ALIGNMENT TABLE

CURVE/TANGENT	BEGIN STATION	RADIUS	LENGTH	DELTA	CHORD	TANGENT/CHORD BEARING	END STATION
L2	10+00.00		266.00'			N28°42'37"E	12+66.00
C1	12+66.00	37.00'	58.12'	90°00'00"	52.33	N16°17'23"W	
L3	13+24.12		111.69'			N61°17'23"W	14+35.81

EASEMENT LEGEND

PUE: PUBLIC UTILITY EASEMENT
SDE: PUBLIC STORM DRAINAGE EASEMENT
SSE: PUBLIC SANITARY SEWER EASEMENT

CURB RETURN DATA

1	SEE SHEET C105
2	SEE SHEET C105
3	SEE SHEET C106
4	SEE SHEET C106
5	SEE SHEET C106

LEGEND

NEW AC PAVEMENT

CONCRETE SIDEWALK AND PLANTER STRIP LANDSCAPING TO BE CONSTRUCTED BY HOMEBUILDER

CONCRETE SIDEWALK AND PLANTER STRIP LANDSCAPING TO BE CONSTRUCTED BY CONTRACTOR

CONCRETE DRIVEWAY TO BE CONSTRUCTED BY THE HOMEBUILDER

SAWCUT LINE

STREET CONSTRUCTION NOTES:

1. CONTRACTOR SHALL CONSTRUCT CURB RAMPS PER CITY DETAIL WL-507B, SHEET C107, UNLESS OTHERWISE NOTED.
2. CONTRACTOR SHALL INSTALL SIDEWALK PER CITY DETAIL WL-508, SHEET C107, UNLESS NOTED OTHERWISE.
3. CONTRACTOR SHALL INSTALL TYPICAL CURB AND GUTTER PER CITY DETAIL WL-501, SHEET C107 UNLESS NOTED OTHERWISE.
4. DRY UTILITY CROSSINGS SHALL BE PLACED PRIOR TO PROOF ROLL TEST FOR CURB INSTALLATION. THE NUMBER OF CROSSINGS, EXACT LOCATION, DEPTH, CONDUIT TYPE, ETC. SHALL BE SPECIFIED BY THE PRIVATE UTILITY CARRIERS. CONTRACTOR SHALL COORDINATE.
5. CONTRACTOR SHALL INSTALL CENTERLINE SURVEY MONUMENT BOXES PER DETAILS WL-513A, WL-513-B, AND WL-513C ON SHEET C108 AT ALL INTERSECTIONS, PCS, AND PTS.
6. EXISTING UTILITIES SHALL BE RELOCATED (IF REQUIRED). CONTRACTOR SHALL COORDINATE.
7. SEE SHEETS C109 – C110 FOR SIGNING AND STRIPING PLAN AND DETAILS.

AKS ENGINEERING & FORESTRY, LLC
12965 SW HERMAN RD STE 100
TUALATIN, OR 97062
P: 503.563.6151
F: 503.563.6152
aks-eng.com

AKS

ENGINEERING · SURVEYING · NATURAL RESOURCES
FORESTRY · PLANNING · LANDSCAPE ARCHITECTURE

KNOLLCREST SUBDIVISION

OREGON
CLACKAMAS COUNTY TAX MAP 2 1E 25CC

WEST LINN
TAX LOTS 100 & 200

DEERHILL LANE - ROXBURY DRIVE PLAN AND PROFILE

DESIGNED BY: CLR
DRAWN BY: NSL/AMF
CHECKED BY: RSW
SCALE: AS NOTED
DATE: 07/30/2018

REGISTERED PROFESSIONAL ENGINEER
58540PE
OREGON
JULY 9, 2002
MONTGOMERY B. HURLEY
RENEWAL DATE: 6/30/19

REVISIONS

JOB NUMBER
5132

SHEET
C104

AKS DRAWING FILE: 5132 C100 DEERHILL – ROXBURY.DWG | LAYOUT: C104

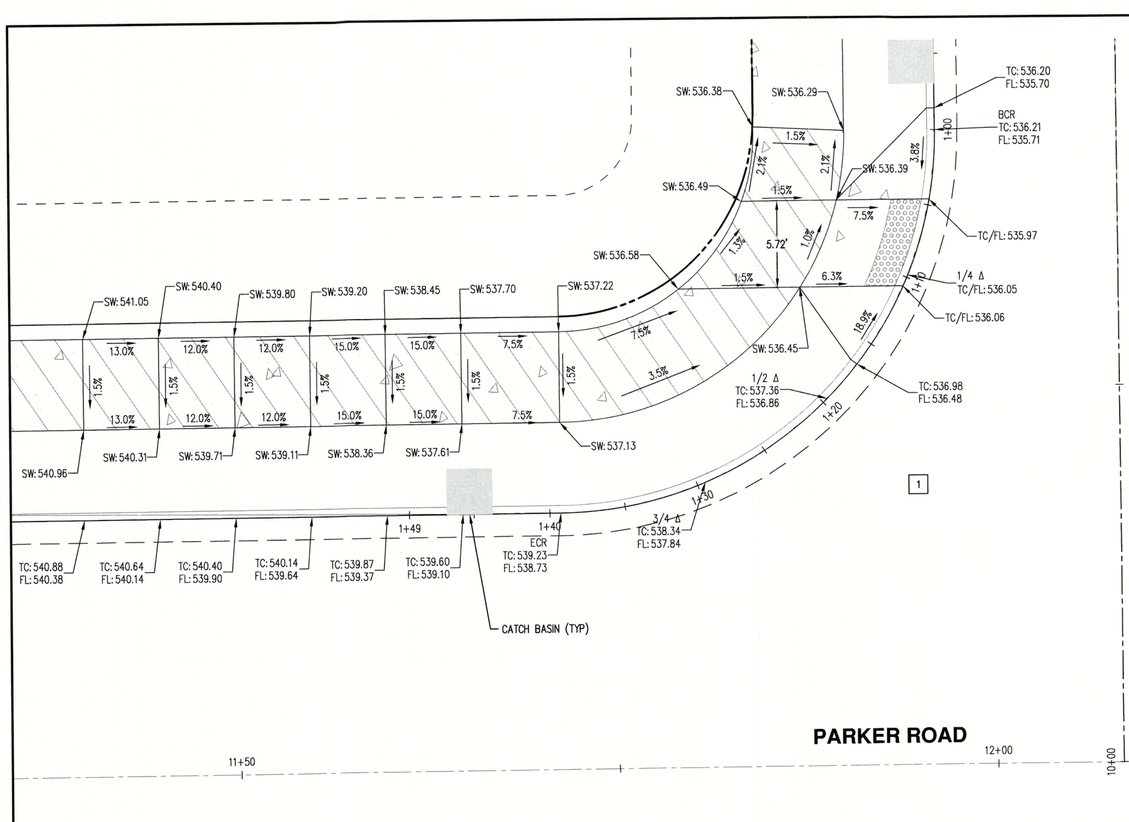

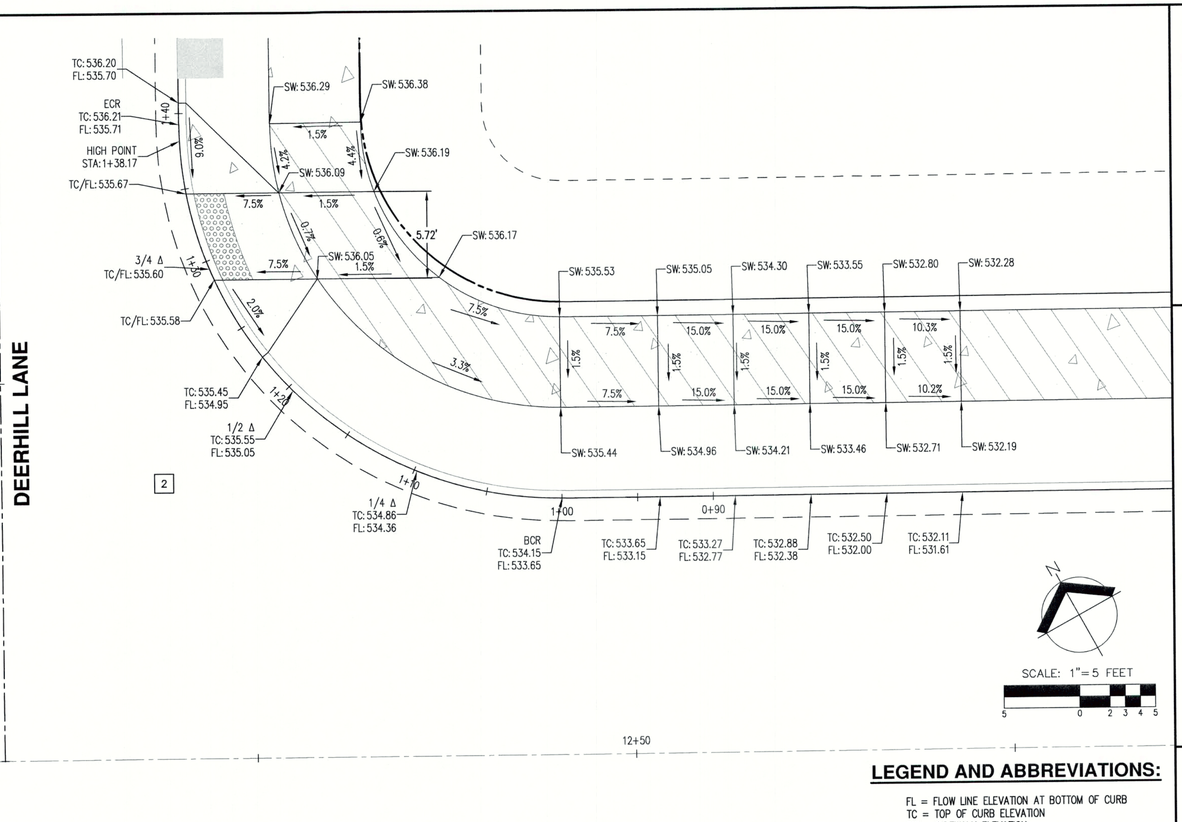

SCALE: 1"= 5 FEET

LEGEND AND ABBREVIATIONS:

FL = FLOW LINE ELEVATION AT BOTTOM OF CURB
TC = TOP OF CURB ELEVATION
SW = SIDEWALK ELEVATION
BCR = BEGIN CURB RETURN
ECR = END CURB RETURN

X.X% DOWNWARD GRADE

NOTES:

1. CONTRACTOR SHALL CONSTRUCT CURB RAMPS PER DETAILS WL-507B, SHEET C107, UNLESS OTHERWISE NOTED.
2. CONTRACTOR IS RESPONSIBLE FOR CONSTRUCTING ALL SIDEWALK TO MEET ADA AND JURISDICTIONAL REQUIREMENTS.
3. CONTRACTOR SHALL CONTACT PROJECT ENGINEER/AKS INSPECTOR ONCE FORMS ARE IN PLACE, TO CHECK FORMS PRIOR TO POURING CONCRETE. CONTRACTOR SHALL ALLOT A FOUR DAY WINDOW FOR INSPECTION.
4. CONTRACTOR SHALL MAINTAIN 2% MAXIMUM SLOPE IN ANY DIRECTION AT ADA LANDINGS AND A MAXIMUM SLOPE OF 8.3% FOR A MAXIMUM OF 15 FEET FOR ADA RAMPS.
5. CURB GRADE AT ADA RAMP TO BE MINIMUM 1% AND MAXIMUM 2%
6. GUTTER SLOPE AT ADA RAMP TO BE 5% MAXIMUM.
7. ALL SIDEWALKS SHALL HAVE A MAXIMUM CROSS SLOPE OF 2%
8. **TOP OF CURB ELEVATIONS SHOWN ON PROFILE REPRESENT FULL HEIGHT CURB AND DO NOT REFLECT DROPS IN CURB OR CURB RAMPS.**

– SIDEWALK TO BE INSTALLED BY HOMEBUILDER

– SIDEWALK AND PLANTER STRIP LANDSCAPING TO BE INSTALLED BY CONTRACTOR

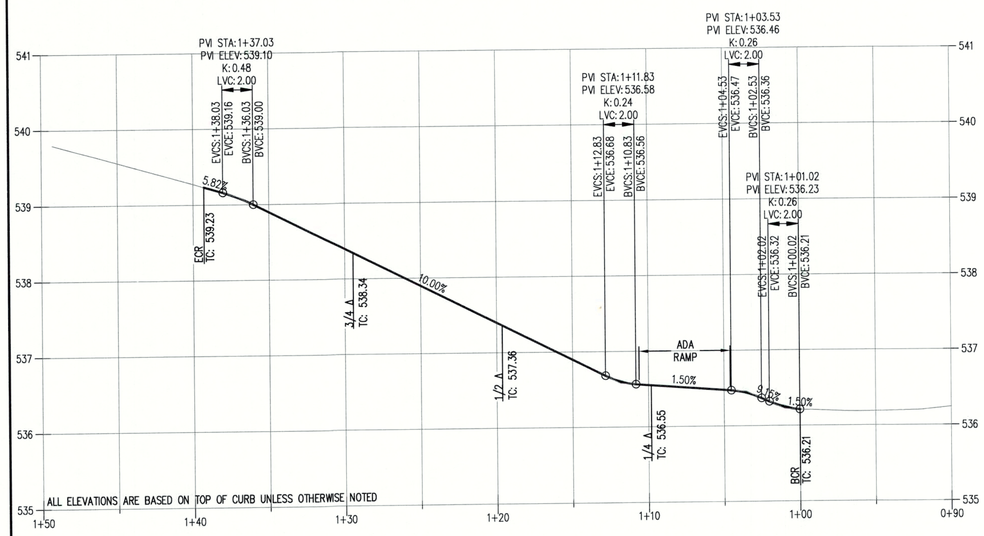

CR - 1
HOR: 1"= 5'
VER: 1"= 1'

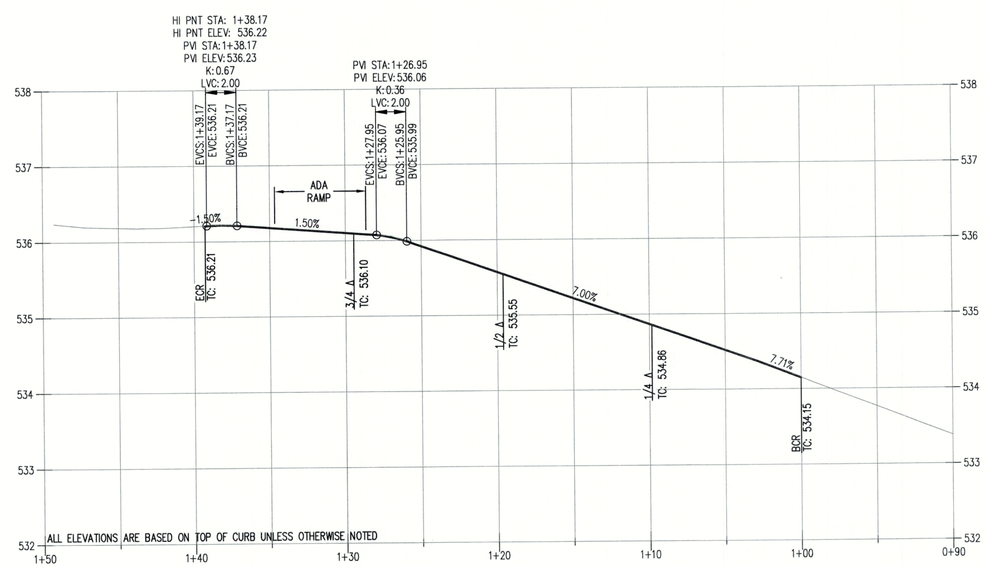

CR - 2
HOR: 1"= 5'
VER: 1"= 1'

CURB RETURN DATA

1
BCR: STA 10+42.00 (12.00L) DEERHILL LANE
DELTA: 90°00'00"
RADIUS: 25.00
ARC LENGTH: 39.27
ECR: STA 11+71.28 (17.00L) PARKER ROAD

2
BCR: STA 12+45.28 (17.00L) PARKER ROAD
DELTA: 90°00'00"
RADIUS: 25.00
ARC LENGTH: 39.27
ECR: STA 10+42.00 (12.00R) DEERHILL LANE

AKS ENGINEERING & FORESTRY, LLC
12965 SW HERMAN RD STE 100
TUALATIN, OR 97062
P: 503.563.6151
F: 503.563.6152
aks-eng.com

AKS
ENGINEERING · SURVEYING · NATURAL RESOURCES
FORESTRY · PLANNING · LANDSCAPE ARCHITECTURE

KNOLLCREST SUBDIVISION

OREGON
CLACKAMAS COUNTY TAX MAP 2 1E 25CC

WEST LINN
TAX LOTS 100 & 200

CURB RETURN INFORMATION (1 & 2)

DESIGNED BY:	CLR
DRAWN BY:	NSL/AMF
CHECKED BY:	RSW
SCALE:	AS NOTED

DATE: 07/30/2018

REGISTERED PROFESSIONAL ENGINEER 58542PE OREGON JULY 9, 2002 MONTGOMERY B. HURLEY

RENEWAL DATE: 6/30/19

REVISIONS

JOB NUMBER
5132

SHEET
C105

AKS DRAWING FILE: 5132 C100 CURBS.DWG | LAYOUT: C105

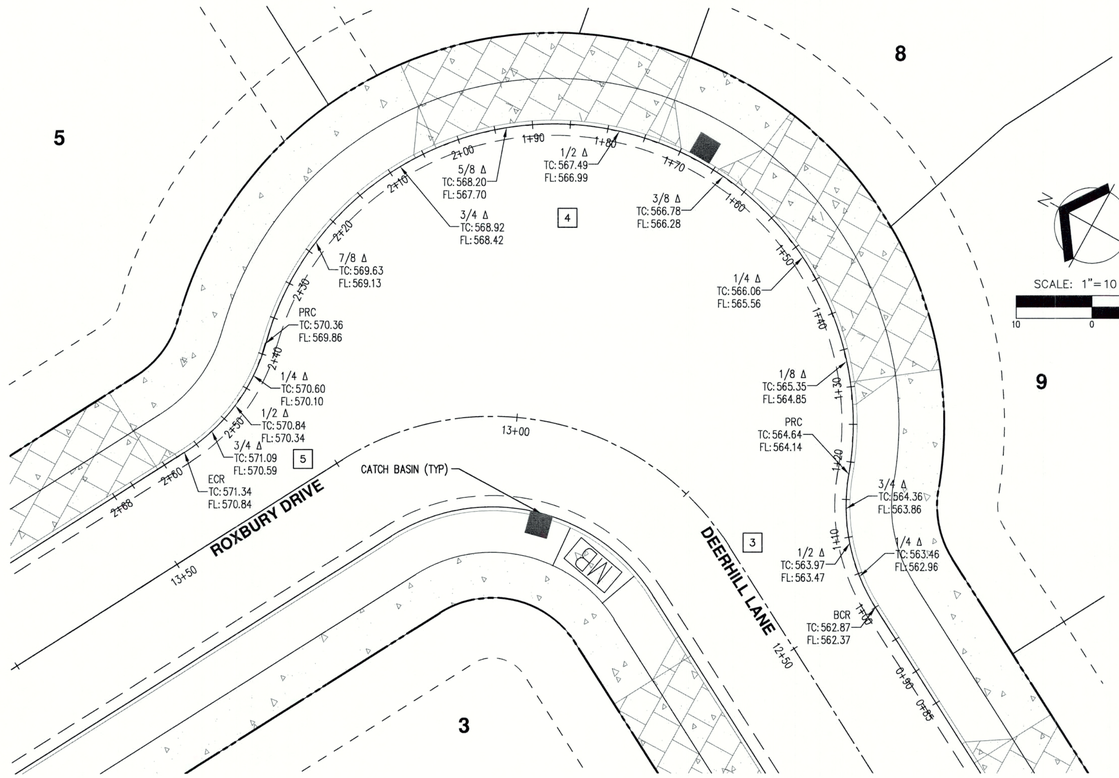

LEGEND AND ABBREVIATIONS:

FL = FLOW LINE ELEVATION AT BOTTOM OF CURB
TC = TOP OF CURB ELEVATION
SW = SIDEWALK ELEVATION
BCR = BEGIN CURB RETURN
ECR = END CURB RETURN

X.X% ← DOWNWARD GRADE

NOTES:

1. CONTRACTOR SHALL CONSTRUCT CURB RAMPS PER DETAILS WL-507B, SHEET C107, UNLESS OTHERWISE NOTED.
2. CONTRACTOR IS RESPONSIBLE FOR CONSTRUCTING ALL SIDEWALK TO MEET ADA AND JURISDICTIONAL REQUIREMENTS.
3. CONTRACTOR SHALL CONTACT PROJECT ENGINEER/AKS INSPECTOR ONCE FORMS ARE IN PLACE, TO CHECK FORMS PRIOR TO POURING CONCRETE. CONTRACTOR SHALL ALLOT A FOUR DAY WINDOW FOR INSPECTION.
4. CONTRACTOR SHALL MAINTAIN 2% MAXIMUM SLOPE IN ANY DIRECTION AT ADA LANDINGS AND A MAXIMUM SLOPE OF 8.3% FOR A MAXIMUM OF 15 FEET FOR ADA RAMPS.
5. CURB GRADE AT ADA RAMP TO BE MINIMUM 1% AND MAXIMUM 2%.
6. GUTTER SLOPE AT ADA RAMP TO BE 5% MAXIMUM.
7. ALL SIDEWALKS SHALL HAVE A MAXIMUM CROSS SLOPE OF 2%.
8. **TOP OF CURB ELEVATIONS SHOWN ON PROFILE REPRESENT FULL HEIGHT CURB AND DO NOT REFLECT DROPS IN CURB OR CURB RAMPS.**

– SIDEWALK TO BE INSTALLED BY HOMEBUILDER

– SIDEWALK AND PLANTER STRIP LANDSCAPING TO BE INSTALLED BY CONTRACTOR

CURB RETURN DATA

3
BCR: STA 12+48.90 (12.00R) DEERHILL LANE
DELTA: 42°07'37"
RADIUS: 25.00
ARC LENGTH: 18.38
PRC: STA 12+65.67 (18.46R) DEERHILL LANE

4
DELTA: 174°15'15"
RADIUS: 39.50
ARC LENGTH: 120.13
PRC: STA 13+24.45 (18.46R) ROXBURY DRIVE

5
DELTA: 42°07'37"
RADIUS: 25.00
ARC LENGTH: 18.38
ECR: STA 13+41.22 (12.00R) ROXBURY DRIVE

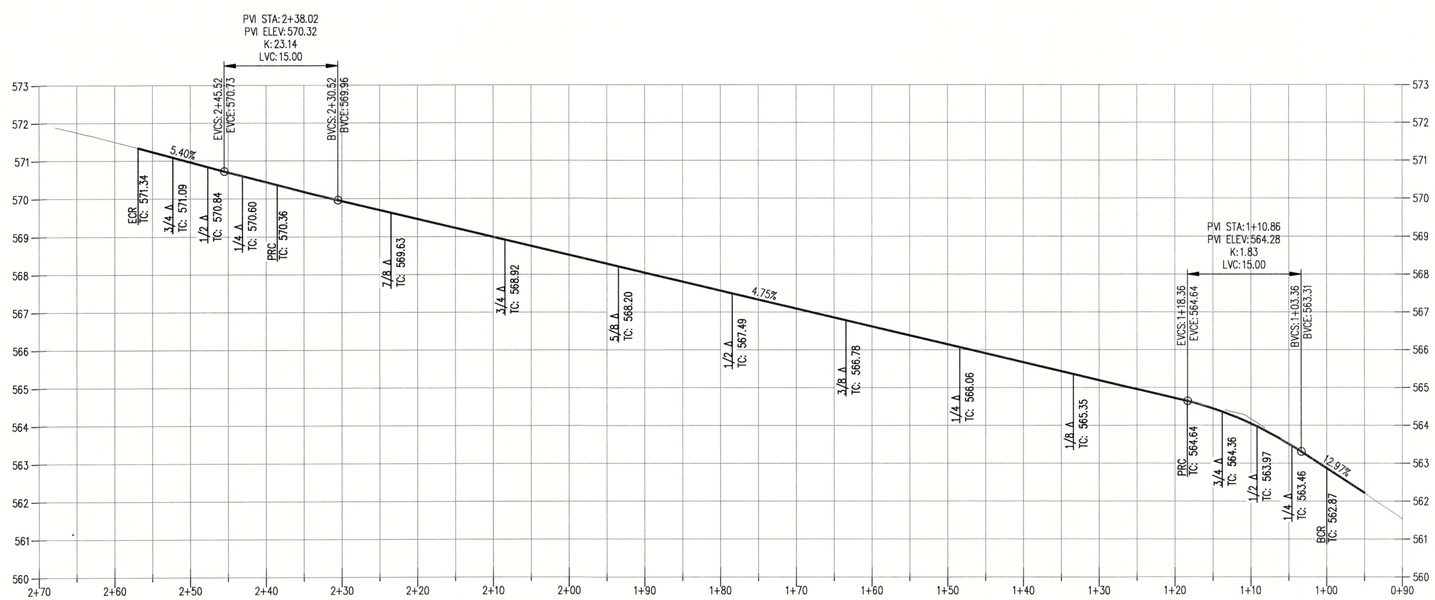

EYEBROW
HOR: 1"= 10'
VER: 1"= 2'

AKS ENGINEERING & FORESTRY, LLC
12965 SW HERMAN RD STE 100
TUALATIN, OR 97062
P: 503.563.6151
F: 503.563.6152
aks-eng.com

ENGINEERING · SURVEYING · NATURAL RESOURCES
FORESTRY · PLANNING · LANDSCAPE ARCHITECTURE

KNOLLCREST SUBDIVISION

OREGON

CLACKAMAS COUNTY TAX MAP 2 1E 25CC

WEST LINN

TAX LOTS 100 & 200

CURB RETURN INFORMATION (3, 4, & 5)

DESIGNED BY:	CLR
DRAWN BY:	NSL/AMF
CHECKED BY:	RSW
SCALE:	AS NOTED

DATE: 07/30/2018

REGISTERED PROFESSIONAL ENGINEER 58548PE OREGON JULY 9, 2013 MONTGOMERY B. HURLEY

RENEWAL DATE: 6/30/19

REVISIONS

JOB NUMBER
5132

SHEET
C106

AKS DRAWING FILE: 5132 C100 EYEBROW.DWG | LAYOUT: C106

THIS DETAIL DRAWING SHALL NOT BE ALTERED OR CHANGED IN ANY MANNER EXCEPT BY THE CITY ENGINEER. IT IS THE RESPONSIBILITY OF THE USER TO ACQUIRE THE MOST CURRENT VERSION OF THE DETAIL.

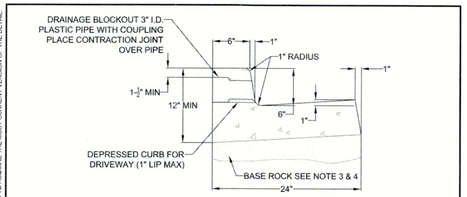

FLUSH, DEPRESSED CURB FOR WHEELCHAIR RAMP 2% MAX SLOPE

TYPICAL CURB AND GUTTER

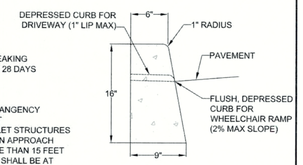

TYPICAL STRAIGHT CURB

NOTE:

1. CONCRETE SHALL HAVE A BREAKING STRENGTH OF 3300 PSI AFTER 28 DAYS
2. CONTRACTION JOINTS:
   A) TO BE PROVIDED:
      -AT EACH POINT OF TANGENCY
      -AT EACH COLD JOINT
      -AT EACH SIDE OF INLET STRUCTURES
      -AT BOTH SIDES OF AN APPROACH
   B) SPACING TO BE NOT MORE THAN 15 FEET
   C) THE DEPTH OF THE JOINT SHALL BE AT LEAST 1/3 OF THE THICKNESS OF CONCRETE
   D) EXPANSION JOINTS SHALL NOT BE USED
3. BASE ROCK - 1-1/2"-0", 95% COMPACTION PER AASHTO T-180 ROCK SHALL BE TO SUBGRADE OF THE STREET SECTION OR 4" IN DEPTH, WHICHEVER IS GREATER
4. FULL DEPTH PREPARED ROCK SECTION SHALL EXTEND 1' HORIZONTALLY BEYOND BOTH SIDES OF CURB AND GUTTER
5. DRAINAGE BLOCK - 3" DIA. PLASTIC PIPE
   A) DRAINAGE ACCESS THROUGH EXISTING CURBS SHALL BE DONE BY:
      -CORE DRILLING
      -VERTICAL SAWCUT OF CURB 24" EACH SIDE OF DRAIN AND RE-POURED TO FULL DEPTH OF CURB
6. STAMP TOP OF CURB WITH "W" AT WATER SERVICE CROSSING AND "S" AT SANITARY LATERAL CROSSING

TYPICAL CURBS

City of West Linn | DATE: 2010 | DRAWING NO. WL-501 | FILE NO.

THIS DETAIL DRAWING SHALL NOT BE ALTERED OR CHANGED IN ANY MANNER EXCEPT BY THE CITY ENGINEER. IT IS THE RESPONSIBILITY OF THE USER TO ACQUIRE THE MOST CURRENT VERSION OF THE DETAIL.

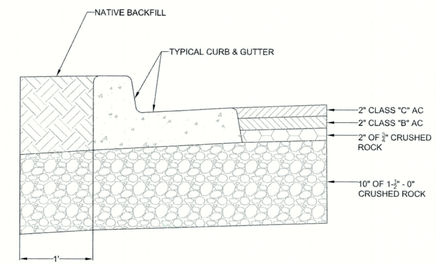

NOTE:

1. UNLESS OTHERWISE APPROVED BY THE CITY ENGINEER, STREETS SHALL BE PAVED TO FINAL GRADE USING 2 OR MORE LIFTS. FINAL LIFT SHALL BE PLACED ONLY AFTER ACCEPTANCE OF THE FIRST LIFT AT A TIME AS DIRECTED OR APPROVED BY THE CITY ENGINEER
2. BASE SHALL BE PREPARED I FOOT BEHIND CURB
3. SEE SECTION 5.0030 PAVEMENT DESIGN FOR ALL ROADWAYS CLASSIFIED COLLECTOR OR HIGHER

ALLEY, LOCAL AND NEIGHBORHOOD ROAD STRUCTURAL SECTIONS

City of West Linn | DATE: 2010 | DRAWING NO. WL-502 | FILE NO.

THIS DETAIL DRAWING SHALL NOT BE ALTERED OR CHANGED IN ANY MANNER EXCEPT BY THE CITY ENGINEER. IT IS THE RESPONSIBILITY OF THE USER TO ACQUIRE THE MOST CURRENT VERSION OF THE DETAIL.

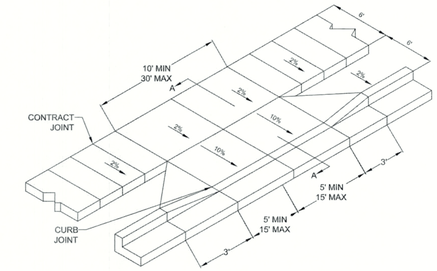

SIDEWALK AWAY FROM CURB

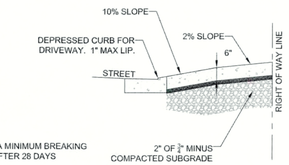

SECTION A-A

NOTE:

1. CONCRETE SHALL HAVE A MINIMUM BREAKING STRENGTH OF 3300 PSI AFTER 28 DAYS 6 SACK MIX
2. CURB SHALL BE TROWELED JOINT WITH MIN. 1/2" RADIUS ALONG BACK OF CURB
3. DRIVEWAY SHALL BE A MINIMUM 6" THICK
4. DRIVEWAY CURB CUT SHALL COMPLY WITH THE CONDITIONS OF 5.0070, "WIDTH AND LOCATION OF CURB CUTS"
5. FOR REPLACEMENT OF EXISITNG APPROACH:
   A. MUST MEET CURRENT ADA REQUIREMENTS TO GREATEST DEGREE POSSIBLE
   B. DAMAGED ROADWAY MUST BE SAWCUT AND REPAVED WITH CLASS C HOT MIX ASPHALT

RESIDENTIAL DRIVEWAY WITH SIDEWALK AWAY FROM CURB

City of West Linn | DATE: 2010 | DRAWING NO. WL-503A | FILE NO.

THIS DETAIL DRAWING SHALL NOT BE ALTERED OR CHANGED IN ANY MANNER EXCEPT BY THE CITY ENGINEER. IT IS THE RESPONSIBILITY OF THE USER TO ACQUIRE THE MOST CURRENT VERSION OF THE DETAIL.

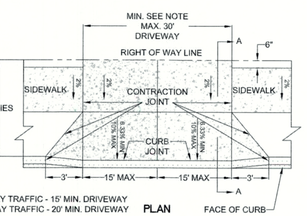

NOTES:
ONE WAY TRAFFIC - 15' MIN. DRIVEWAY
TWO WAY TRAFFIC - 20' MIN. DRIVEWAY

PLAN

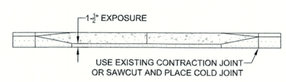

ELEVATION

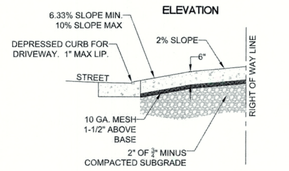

SECTION A-A

NOTE:

1. CONCRETE SHALL HAVE A MINIMUM BREAKING STRENGTH OF 4000 PSI AFTER 28 DAYS, 6 SACK MIX
2. CURB JOINT SHALL BE A TROWELED JOINT WITH A.MIN. 1/2" RADIUS ALONG BACK OF CURB
3. DRIVEWAY SHALL BE A MINIMUM 6" THICK
4. DRIVEWAY CURB CUT SHALL COMPLY WITH THE CONDITIONS OF 5.0070, "WIDTH AND LOCATION OF CURB CUTS"

COMMERCIAL DRIVEWAY WITH SIDEWALK AWAY FROM CURB

City of West Linn | DATE: 2010 | DRAWING NO. WL-504A | FILE NO.

THIS DETAIL DRAWING SHALL NOT BE ALTERED OR CHANGED IN ANY MANNER EXCEPT BY THE CITY ENGINEER. IT IS THE RESPONSIBILITY OF THE USER TO ACQUIRE THE MOST CURRENT VERSION OF THE DETAIL.

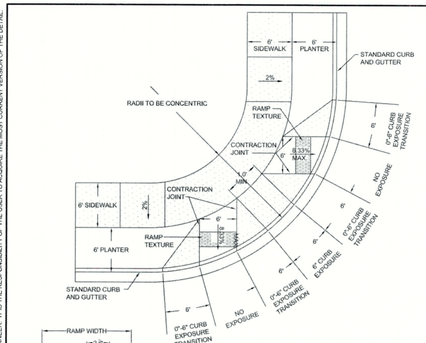

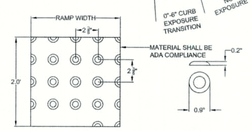

RAMP TEXTURE PATTERN DETAIL

TRUNCATED DOME DETAIL

NOTE:

1. LANDING AT TOP OF RAMP SHALL NOT EXCEED 2% IN ANY DIRECTION AND SHALL BE A MINIMUM OF 60" x 60".
2. RAMP CROSS SLOPE SHALL NOT EXCEED 2% (AS MEASURED PERPENDICULAR TO PEDESTRIAN TRAFFIC FLOW).
3. TRUNCATED DOME MUST EXTEND THE FULL WIDTH OF THE RAMP AND COVER THE FIRST 2 FEET OF THE RAMP CLOSEST TO THE STREET.
4. TRANSITIONS FROM THE RAMP TO THE WALKWAY, GUTTER, AND STREET MUST BE FLUSH (LEVEL) AND FREE OF ABRUPT LEVEL CHANGES.
5. THE GUTTER OR ADJACENT ROADWAY MUST HAVE A SLOPE OF NO MORE THAN 5 PERCENT (1:20) TOWARD THE RAMP.
6. FLARED SIDES ("WING") OF THE CURB RAMP SHALL NOT EXCEED 10% IN SLOPE (8.33% IF PEDESTRIAN TRAVEL IS REQUIRED OVER THEM PER ADA STANDARDS - I.E. IF MINIMUM 48" x 48" (FOR EXISTING SITES ONLY) LANDING IS NOT PROVIDED AT TOP OF RAMP).
7. CONCRETE STRENGTH SHALL BE 3300 PSI.
8. PLACE CONTRACTION JOINTS AS SHOWN ABOVE.
9. NO ABOVE GROUND UTILITIES ARE PERMITTED WITHIN RAMP AREA.
10. WHEN EITHER OPPOSING CURB RAMP HAS AN EXISTING TWIN RAMP, USE DETAIL WL-507B.

TWIN CURB RAMP

City of West Linn | DATE: 2010 | DRAWING NO. WL-507B | FILE NO.

THIS DETAIL DRAWING SHALL NOT BE ALTERED OR CHANGED IN ANY MANNER EXCEPT BY THE CITY ENGINEER. IT IS THE RESPONSIBILITY OF THE USER TO ACQUIRE THE MOST CURRENT VERSION OF THE DETAIL.

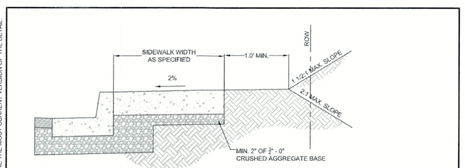

TYPICAL CURB TIGHT SIDEWALK

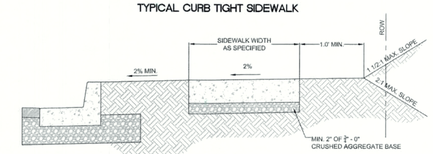

SIDEWALK AWAY FROM CURB

NOTE:

1. CONCRETE SHALL BE 3300 PSI AT 28 DAYS.
2. PANEL LENGTHS SHALL BE EQUAL TO THE SIDEWALK WIDTH, BUT MAY BE ADJUSTED WITH THE CITY ENGINEER'S APPROVAL.
3. CONTRACTION JOINTS (1/3RD OF THE THICKNESS OF CONCRETE) SHALL BE PLACED EVERY THIRD PANEL, WITH A MAX. SPACING OF 15 FEET. JOINTS SHALL ALSO BE PLACED AT THE SIDES OF DRIVEWAY APPROACHES, UTILITY VAULTS, AND WHEELCHAIR RAMPS.
4. A CURING COMPOUND SHALL BE USED. WHITE REFLECTIVE SHEETING SHALL BE USED IN CASE OF RAIN.
5. FOR SIDEWALKS ADJACENT TO THE CURB AND POURED AT THE SAME TIME AS THE CURB, THE JOINT BETWEEN THEM SHALL BE A TROWELED JOINT WITH A MIN. 1/2" RADIUS.
6. THE SIDEWALK SHALL HAVE A MIN. THICKNESS OF 6" IF THE SIDEWALK IS INTENDED AS A PORTION OF THE THE DRIVEWAY. OTHERWISE, THE SIDEWALK SHALL HAVE A MIN. THICKNESS OF 4".
7. DRAIN BLOCKOUTS IN THE CURB SHALL BE EXTENDED TO THE BACK OF THE SIDEWALK WITH A 3" DIAMETER PLASTIC PIPE AT A 2% SLOPE. A CONTRACTION JOINT SHALL BE PLACED OVER THE PIPE

CONCRETE SIDEWALK CROSS SECTION

City of West Linn | DATE: 2010 | DRAWING NO. WL-508 | FILE NO.

AKS ENGINEERING & FORESTRY, LLC
12965 SW HERMAN RD STE 100
TUALATIN, OR 97062
P: 503.563.6151
F: 503.563.6152
aks-eng.com

AKS

ENGINEERING · SURVEYING · NATURAL RESOURCES
FORESTRY · PLANNING · LANDSCAPE ARCHITECTURE

KNOLLCREST SUBDIVISION

WEST LINN OREGON
TAX LOTS 100 & 200 CLACKAMAS COUNTY TAX MAP 2 1E 25CC

STREET CONSTRUCTION DETAILS

DESIGNED BY:	CLR
DRAWN BY:	NSL/AMF
CHECKED BY:	RSW
SCALE:	AS NOTED
DATE: 07/30/2018	

REGISTERED PROFESSIONAL ENGINEER 58540PE OREGON JULY 9, 2002 MONTGOMERY B. HURLEY
RENEWAL DATE: 6/30/19

REVISIONS

JOB NUMBER 5132

SHEET C107

AKS DRAWING FILE: 5132 DETAILS.DWG | LAYOUT: C107

THIS DETAIL DRAWING SHALL NOT BE ALTERED OR CHANGED IN ANY MANNER EXCEPT BY THE CITY ENGINEER. IT IS THE RESPONSIBILITY OF THE USER TO ACQUIRE THE MOST CURRENT VERSION OF THE DETAIL.

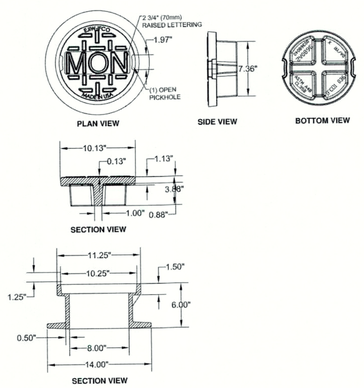

STANDARD 8" MONUMENT WELL
USED BY CLACKAMAS COUNTY SURVEY DEPARTMENT
WHERE SPEEDS ARE ABOVE 35 MPH

EAST JORDAN IRON WORKS, INC.
P.O. BOX 439
EAST JORDAN, MI. 49727
1-800-874-4100
FAX: 231-536-4458

Anders Jorgenson
Oregon Sales Representative
East Jordan Iron Works
(503) 774-4144
Fax (503) 775-3263
Cell (503) 367-7925
ajorgenson@ejiw.com

8" MONUMENT BOX FRAME AND COVER

City of West Linn

DATE:	2010
DRAWING NO.	WL-513A
FILE NO.	

THIS DETAIL DRAWING SHALL NOT BE ALTERED OR CHANGED IN ANY MANNER EXCEPT BY THE CITY ENGINEER. IT IS THE RESPONSIBILITY OF THE USER TO ACQUIRE THE MOST CURRENT VERSION OF THE DETAIL.

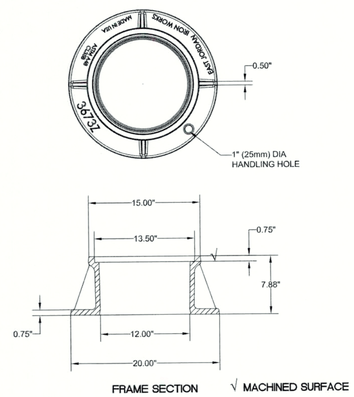

STANDARD 12" MONUMENT WELL
USED BY CLACKAMAS COUNTY SURVEY DEPARTMENT
WHERE SPEEDS ARE ABOVE 35 MPH

EAST JORDAN IRON WORKS, INC.
P.O. BOX 439
EAST JORDAN, MI. 49727
1-800-874-4100
FAX: 231-536-4458

Anders Jorgenson
Oregon Sales Representative
East Jordan Iron Works
(503) 774-4144
Fax (503) 775-3263
Cell (503) 367-7925
ajorgenson@ejiw.com

12" MONUMENT BOX FRAME

City of West Linn

DATE:	2010
DRAWING NO.	WL-513B
FILE NO.	

THIS DETAIL DRAWING SHALL NOT BE ALTERED OR CHANGED IN ANY MANNER EXCEPT BY THE CITY ENGINEER. IT IS THE RESPONSIBILITY OF THE USER TO ACQUIRE THE MOST CURRENT VERSION OF THE DETAIL.

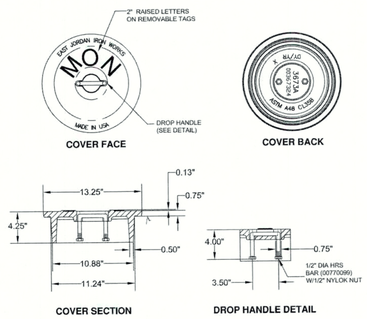

STANDARD 12" MONUMENT COVER
USED BY CLACKAMAS COUNTY SURVEY DEPARTMENT
WHERE SPEEDS ARE ABOVE 35 MPH

EAST JORDAN IRON WORKS, INC.
P.O. BOX 439
EAST JORDAN, MI. 49727
1-800-874-4100
FAX: 231-536-4458

Anders Jorgenson
Oregon Sales Representative
East Jordan Iron Works
(503) 774-4144
Fax (503) 775-3263
Cell (503) 367-7925
ajorgenson@ejiw.com

12" MONUMENT BOX COVER

City of West Linn

DATE:	2010
DRAWING NO.	WL-513C
FILE NO.	

AKS ENGINEERING & FORESTRY, LLC
12965 SW HERMAN RD STE 100
TUALATIN, OR 97062
P: 503.563.6151
F: 503.563.6152
aks-eng.com

ENGINEERING · SURVEYING · NATURAL RESOURCES
FORESTRY · PLANNING · LANDSCAPE ARCHITECTURE

KNOLLCREST SUBDIVISION

WEST LINN — OREGON
TAX LOTS 100 & 200 — CLACKAMAS COUNTY TAX MAP 2 1E 25CC

STREET CONSTRUCTION DETAILS

DESIGNED BY:	CLR
DRAWN BY:	NSL/AMF
CHECKED BY:	RSW
SCALE:	AS NOTED
DATE: 07/30/2018	

REGISTERED PROFESSIONAL ENGINEER 58540PE OREGON JULY 9, 2002 MONTGOMERY B. HURLEY
RENEWAL DATE: 6/30/19

REVISIONS

JOB NUMBER
5132

SHEET
C108

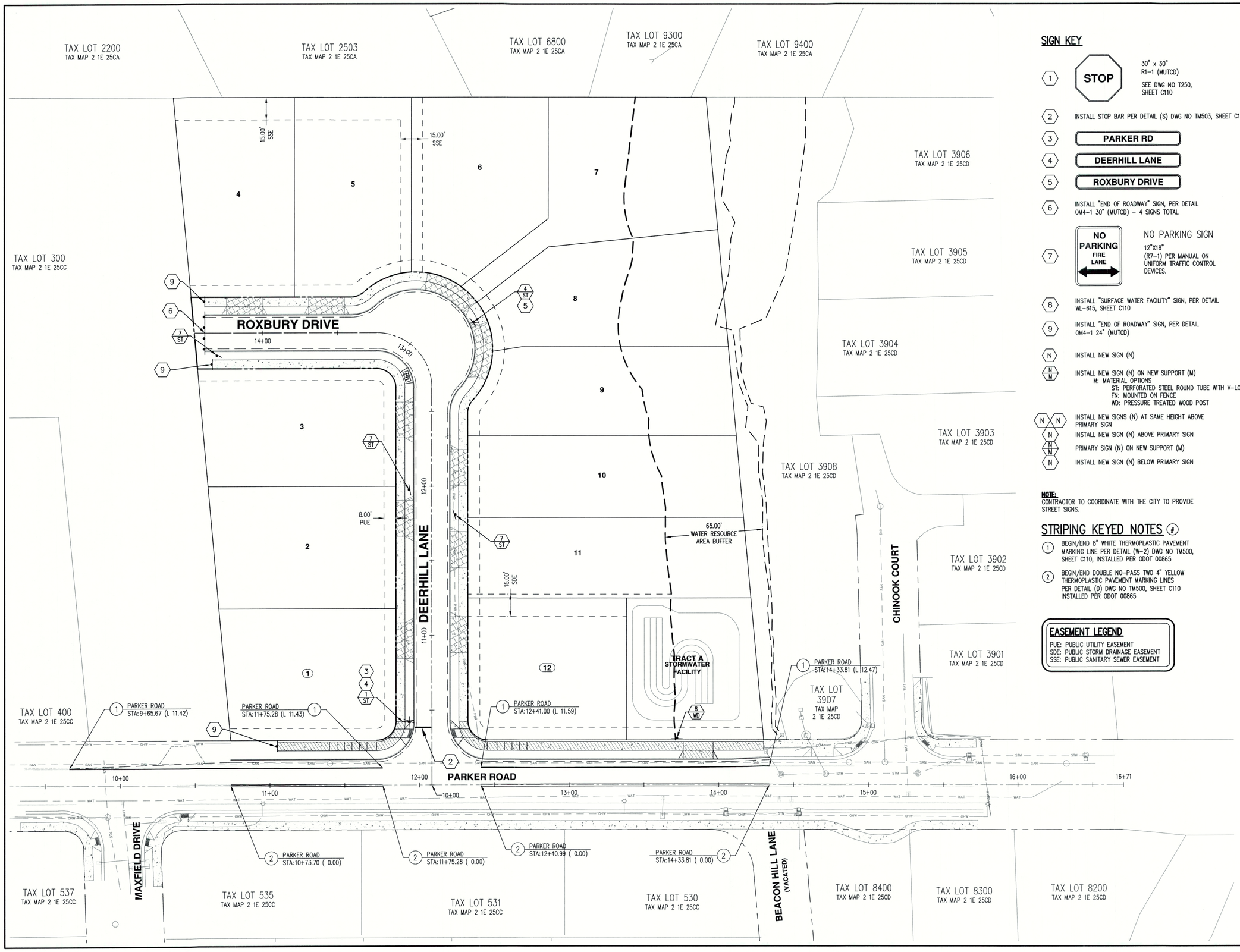

SIGN KEY

1. STOP — 30" x 30" R1-1 (MUTCD). SEE DWG NO T250, SHEET C110
2. INSTALL STOP BAR PER DETAIL (S) DWG NO TM503, SHEET C110
3. PARKER RD
4. DEERHILL LANE
5. ROXBURY DRIVE
6. INSTALL "END OF ROADWAY" SIGN, PER DETAIL OM4-1 30" (MUTCD) – 4 SIGNS TOTAL
7. NO PARKING FIRE LANE — NO PARKING SIGN 12"X18" (R7-1) PER MANUAL ON UNIFORM TRAFFIC CONTROL DEVICES.
8. INSTALL "SURFACE WATER FACILITY" SIGN, PER DETAIL WL-615, SHEET C110
9. INSTALL "END OF ROADWAY" SIGN, PER DETAIL OM4-1 24" (MUTCD)

N — INSTALL NEW SIGN (N)

N/M — INSTALL NEW SIGN (N) ON NEW SUPPORT (M)
M: MATERIAL OPTIONS
ST: PERFORATED STEEL ROUND TUBE WITH V-LOC
FN: MOUNTED ON FENCE
WD: PRESSURE TREATED WOOD POST

N N — INSTALL NEW SIGNS (N) AT SAME HEIGHT ABOVE PRIMARY SIGN

N — INSTALL NEW SIGN (N) ABOVE PRIMARY SIGN

N/M — PRIMARY SIGN (N) ON NEW SUPPORT (M)

N — INSTALL NEW SIGN (N) BELOW PRIMARY SIGN

NOTE:
CONTRACTOR TO COORDINATE WITH THE CITY TO PROVIDE STREET SIGNS.

STRIPING KEYED NOTES (#)

1. BEGIN/END 8" WHITE THERMOPLASTIC PAVEMENT MARKING LINE PER DETAIL (W-2) DWG NO TM500, SHEET C110, INSTALLED PER ODOT 00865
2. BEGIN/END DOUBLE NO-PASS TWO 4" YELLOW THERMOPLASTIC PAVEMENT MARKING LINES PER DETAIL (D) DWG NO TM500, SHEET C110 INSTALLED PER ODOT 00865

EASEMENT LEGEND

PUE: PUBLIC UTILITY EASEMENT
SDE: PUBLIC STORM DRAINAGE EASEMENT
SSE: PUBLIC SANITARY SEWER EASEMENT

AKS ENGINEERING & FORESTRY, LLC
12965 SW HERMAN RD STE 100
TUALATIN, OR 97062
P: 503.563.6151
F: 503.563.6152
aks-eng.com

ENGINEERING · SURVEYING · NATURAL RESOURCES
FORESTRY · PLANNING · LANDSCAPE ARCHITECTURE

KNOLLCREST SUBDIVISION

WEST LINN
TAX LOTS 100 & 200

OREGON
CLACKAMAS COUNTY TAX MAP 2 1E 25CC

SIGNING AND STRIPING PLAN

DESIGNED BY:	CLR
DRAWN BY:	NSL/AMF
CHECKED BY:	RSW
SCALE:	AS NOTED
DATE:	07/30/2018

REGISTERED PROFESSIONAL ENGINEER 58540PE OREGON JULY 9, 2002 MONTGOMERY B. HURLEY
RENEWAL DATE: 6/30/19

REVISIONS

JOB NUMBER
5132

SHEET
C109

AKS DRAWING FILE: 5132 C105 SIGNING & STRIPING.DWG | LAYOUT: C109

THIS DETAIL DRAWING SHALL NOT BE ALTERED OR CHANGED IN ANY MANNER EXCEPT BY THE CITY ENGINEER. IT IS THE RESPONSIBILITY OF THE USER TO ACQUIRE THE MOST CURRENT VERSION OF THE DETAIL.

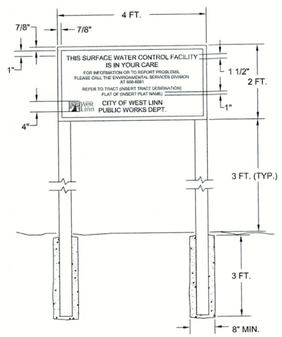

SPECIFICATIONS:

SIZE:	48" x 24"
MATERIAL:	ALUMINUM (.080" THICKNESS)
PAINT:	FACE - 3 COATS OUTDOOR ENAMEL (SPRAYED) BACK - 1 COAT OUTDOOR ENAMEL (SPRAYED)
LETTERING:	SILK SCREEN ENAMEL WHERE POSSIBLE, OR HAND PAINTED ENAMELS
COLOR:	BLACK AND WHITE. WHITE BACKGROUND, LETTERING AND BORDER IN BLACK
TYPE FACE:	HELVETICA. SEE DIMENSIONS SHOWN ABOVE. OUTER BORDER 1/2" WIDTH BLACK
INSTALLATION:	INSTALL ON TWO 8 FT. LONG 4" x 4" POSTS, PRESSURE TREATED, INSTALLED IN 3 FT. DEEP CONCRETE FILLED POST HOLES (8" MIN. DIA.)

SURFACE WATER FACILITY SIGN

City of West Linn | DATE: 2010 | DRAWING NO. WL-615 | FILE NO.

THIS DETAIL DRAWING SHALL NOT BE ALTERED OR CHANGED IN ANY MANNER EXCEPT BY THE CITY ENGINEER. IT IS THE RESPONSIBILITY OF THE USER TO ACQUIRE THE MOST CURRENT VERSION OF THE DETAIL.

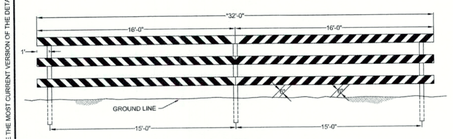

ELEVATION

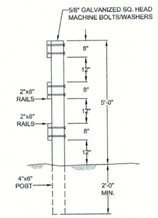

END VIEW

NOTE:

1. RAILS TO BE PAINTED RED WITH WHITE STRIPES. THE WHITE STRIPES SHALL BE REFLECTORIZED. FOR WIDER APPLICATIONS, MULTIPLE SECTIONS AS SHOWN SHALL BE USED.
2. SEE MANUAL ON UNIFORM TRAFFIC CONTROL DEVICES FOR STREETS AND HIGHWAYS AND THE OREGON SUPPLEMENT.

   3F-1 BARRICADES
   6C-8 BARRICADE DESIGN
   6C-9 BARRICADE APPLICATION
3. ALL MATERIALS AND WORKMANSHIP SHALL BE IN ACCORDANCE WITH THE CURRENT STATE OF OREGON DEPARTMENT OF TRANSPORTATION STANDARDS.

SEE WL-516B FOR ALTERNATE DESIGN THAT MAY BE USED WHERE END OF STREET IS AGAINST EMBANKMENT.

PERMAMENT CLOSURE STREET BARRICADE TYPE III

City of West Linn | DATE: 2010 | DRAWING NO. WL-516A | FILE NO.

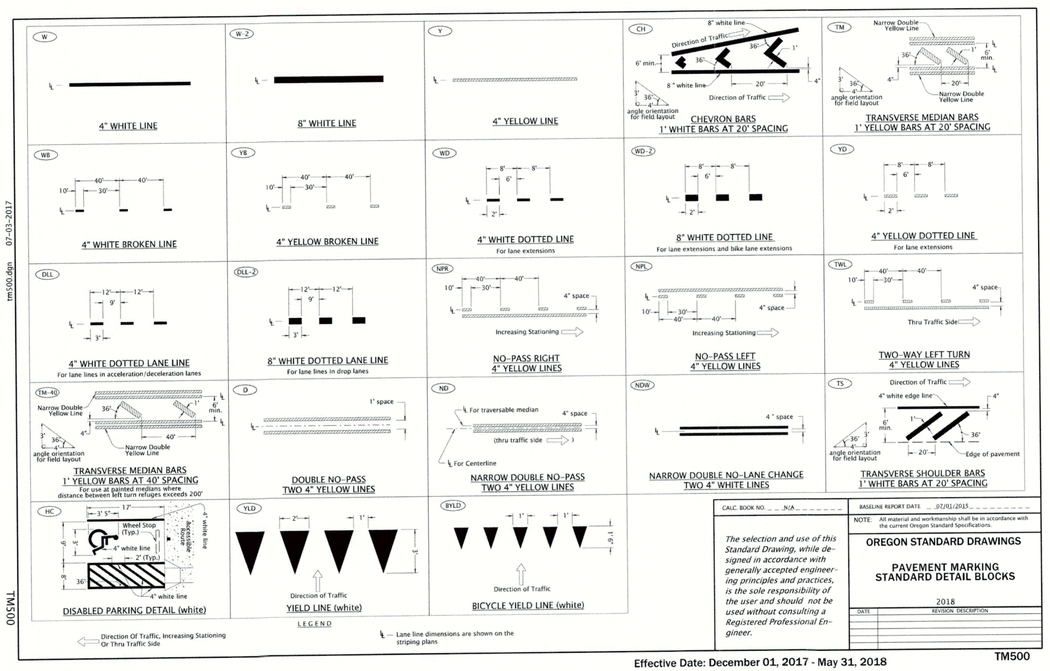

tm500.dgn 07-03-2017

TM500

CALC. BOOK NO. N/A | BASELINE REPORT DATE 07/01/2015

NOTE: All material and workmanship shall be in accordance with the current Oregon Standard Specifications.

The selection and use of this Standard Drawing, while designed in accordance with generally accepted engineering principles and practices, is the sole responsibility of the user and should not be used without consulting a Registered Professional Engineer.

OREGON STANDARD DRAWINGS

PAVEMENT MARKING STANDARD DETAIL BLOCKS

2018

DATE	REVISION DESCRIPTION

Effective Date: December 01, 2017 - May 31, 2018

TM500

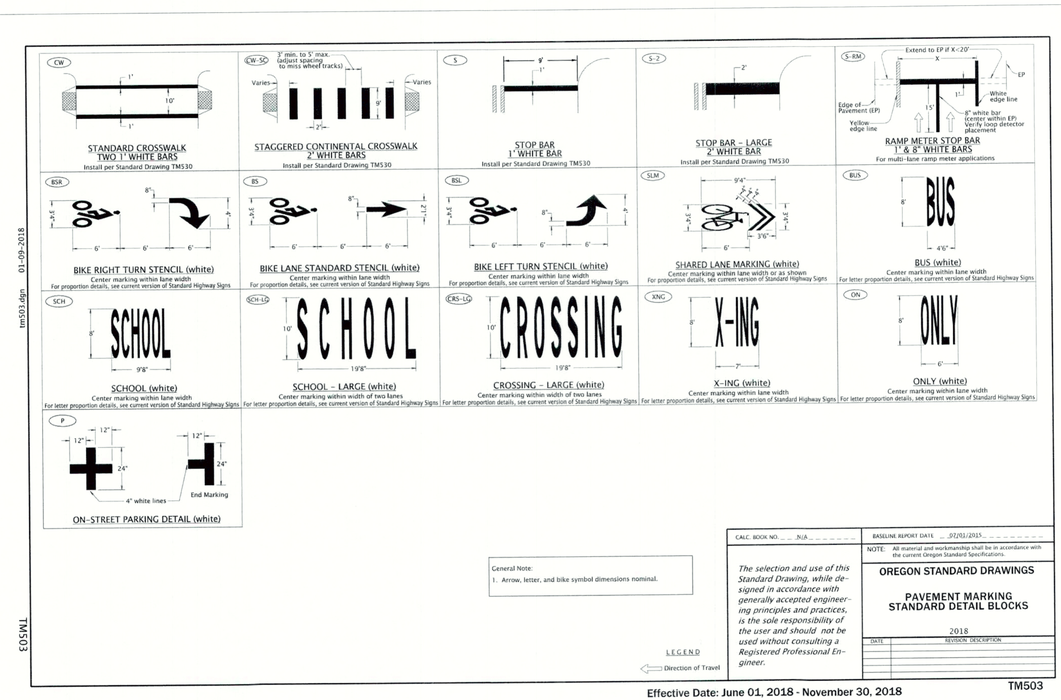

tm503.dgn 01-09-2018

TM503

General Note:
1. Arrow, letter, and bike symbol dimensions nominal.

LEGEND
Direction of Travel

CALC. BOOK NO. N/A | BASELINE REPORT DATE 07/01/2015

NOTE: All material and workmanship shall be in accordance with the current Oregon Standard Specifications.

The selection and use of this Standard Drawing, while designed in accordance with generally accepted engineering principles and practices, is the sole responsibility of the user and should not be used without consulting a Registered Professional Engineer.

OREGON STANDARD DRAWINGS

PAVEMENT MARKING STANDARD DETAIL BLOCKS

2018

DATE	REVISION DESCRIPTION

Effective Date: June 01, 2018 - November 30, 2018

TM503

AKS ENGINEERING & FORESTRY, LLC
12965 SW HERMAN RD STE 100
TUALATIN, OR 97062
P: 503.563.6151
F: 503.563.6152
aks-eng.com

ENGINEERING · SURVEYING · NATURAL RESOURCES
FORESTRY · PLANNING · LANDSCAPE ARCHITECTURE

KNOLLCREST SUBDIVISION

WEST LINN OREGON
TAX LOTS 100 & 200 CLACKAMAS COUNTY TAX MAP 2 1E 25CC

SIGNING AND STRIPING DETAILS

DESIGNED BY:	CLR
DRAWN BY:	NSL/AMF
CHECKED BY:	RSW
SCALE:	AS NOTED
DATE: 07/30/2018	

REGISTERED PROFESSIONAL ENGINEER 58542PE OREGON JULY 9, 2002 MONTGOMERY B. HURLEY
RENEWAL DATE: 6/30/19

REVISIONS

JOB NUMBER 5132

SHEET C110

AKS DRAWING FILE: 5132 DETAILS.DWG | LAYOUT: C110

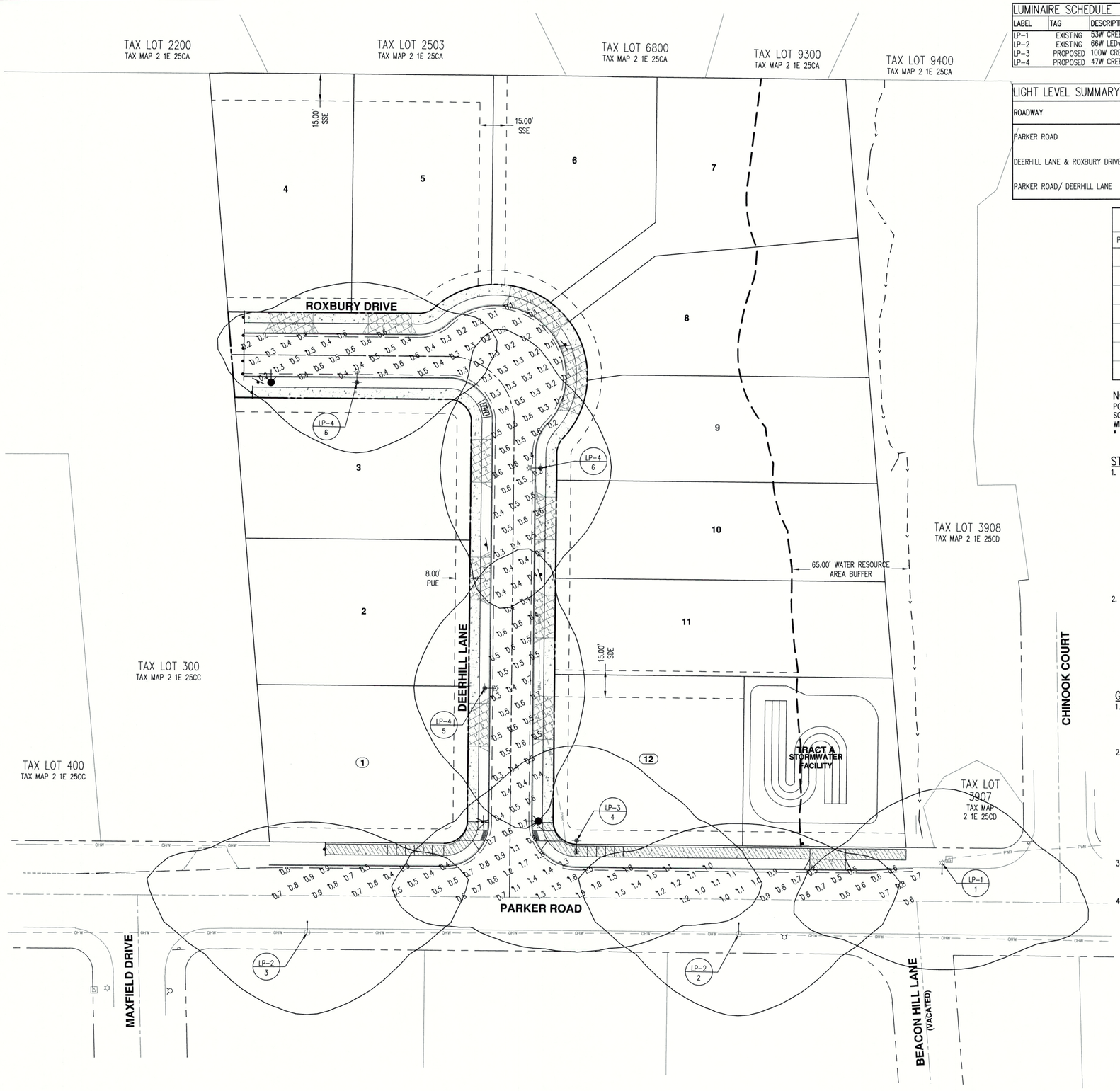

LUMINAIRE SCHEDULE

LABEL	TAG	DESCRIPTION	QTY	TOTAL LAMP LUMENS	LUM. WATTS	LLF	JURISDICTION
LP-1	EXISTING	53W CREE LEDway, TYPE II	1	4550	51	0.93	CITY OF WEST LINN
LP-2	EXISTING	66W LEDway, TYPE II	2	6,079	66	0.93	CITY OF WEST LINN
LP-3	PROPOSED	100W CREE LEDway, TYPE II	1	9,000	100	0.93	CITY OF WEST LINN
LP-4	PROPOSED	47W CREE LEDway, TYPE II	3	3,830	48	0.93	CITY OF WEST LINN

LIGHT LEVEL SUMMARY (CITY OF WEST LINN)

ROADWAY	CLASSIFICATION	CALC TYPE		AVERAGE	MAXIMUM	MINIMUM	AVG/MIN	MAX/MIN
PARKER ROAD	COLLECTOR	ILLUMINANCE	TARGET	>0.5 Fc AVE	N/A	>0.1 Fc	<4:1 AVE/MIN	N/A
			ACHIEVED	0.9	1.9	0.3	3:1	6.3:1
DEERHILL LANE & ROXBURY DRIVE	LOCAL	ILLUMINANCE	TARGET	>0.4 Fc AVE	N/A	>0.1 Fc	<6:1 AVE/MIN	N/A
			ACHIEVED	0.4	0.7	0.1	4:1	7.0:1
PARKER ROAD/ DEERHILL LANE	COLLECTOR/ LOCAL	ILLUMINANCE	TARGET	>1.0 Fc AVE	N/A	>0.1 Fc	<4:1 AVE/MIN	N/A
			ACHIEVED	1.0	1.8	0.5	2:1	3.6:1

LIGHT POLE LOCATION TABLE

POLE NO.	STATION AND OFFSET*	ALIGNMENT	LUMINAIRE TYPE
POLE 1	14+50.29 (21.56 L)	PARKER ROAD	LP-1
POLE 2	13+36.78 (19.38 R)	PARKER ROAD	LP-2
POLE 3	10+95.30 (20.62 R)	PARKER ROAD	LP-2
POLE 4	12+45.49 (32.00 L)	PARKER ROAD	LP-3
POLE 5	11+17.04 (15.00 L)	DEERHILL LANE	LP-4
POLE 6	12+40.82 (15.00 R)	DEERHILL LANE	LP-4
POLE 7	13+75.43 (15.00 L)	DEERHILL LANE	LP-4

NOTE:
POWER SOURCE LOCATIONS TO BE DETERMINED BY PGE. ALL LIGHT POLE POWER SOURCES MUST BE VERIFIED WITH PGE PLANS. CHANGES IN POWER SOURCE LOCATIONS WILL REQUIRE AS-BUILT DRAWINGS.
* OFFSET MEASURED FROM ROADWAY CENTERLINE TO CENTER OF POLE

STREET LIGHTING NOTES:

1. PROPOSED LIGHT POLES SHALL BE PGE APPROVED COMPOSITE, 2-PIECE, SMOOTH FINISH, 35 FOOT, DIRECT BURIED, BRONZE FINISH WITH 30 FOOT MOUNTING HEIGHT AND 6 FOOT BRONZE FINISH MAST ARM.

   PGE APPROVED POLE:
   -SHAKESPEARE C61114 (39362)
   -CMT C61115 (39376)

   PGE APPROVED MAST ARM:
   -WHATLEY MA-72DDB
   -VALMONT IMA0632B475-BRZ
   -SHAKESPEARE OPAR-6-BRONZE

2. JUNCTION BOXES SHALL BE PGE APPROVED SPLICE BOXES.

   PGE APPROVED JUNCTION BOXES ARE:
   -NEWBASIS FCA132418T-00043
   -QUAZITE A42132418A017
   -OLDCASTLE 13241617
   -ARMORCAST A6001946TAX18-PGE
   -HIGHLINE CHA132418HE1

3. LUMINAIRES SHALL BE PGE APPROVED 47/100 WATT LEDWAY, AS SPECIFIED.

   PGE APPROVED LUMINAIRES:
   47W CREE LEDWAY:
   -CREE 90003420 (CU 1356)

   100W CREE LEDWAY:
   -CREE 90003708 (CU 1359)

4. THE PHOTO CONTROL SHALL BE PGE APPROVED EXTENDED LIFE TWISTLOCK, ELECTRONIC, 105 TO 300 VOLT CONTROL.

   PGE APPROVED PHOTOELECTRIC CONTROLS ARE:
   -RIPLEY 6390TF-PGE
   -DTL D124-1.5-1704

5. THE WIRING FROM THE SPLICE BOX TO THE LUMINAIRE SHALL BE PGE APPROVED #10 AWG, 600-VOLT, TYPE THHN. FOR 240-VOLT APPLICATIONS, THE PGE WIRING CONFIGURATION IS: BLACK AND RED (HOT), GREEN (GROUND)

GENERAL NOTES:

1. ALL MATERIAL AND WORKMANSHIP SHALL CONFORM WITH PGE OPTION "A" SPECIFICATIONS. ALL MATERIALS AND INSTALLATION SHALL BE APPROVED BY P.G.E AND THE CITY OF WEST LINN.
2. ALL ELECTRICAL EQUIPMENT SHALL CONFORM TO THE CURRENT STANDARDS OF THE NATIONAL ELECTRICAL MANUFACTURERS ASSOCIATION (NEMA) AND THE UNDERWRITERS LABORATORIES, INC. (U.L.). IN ADDITION TO THE REQUIREMENTS OF THE PLANS, STANDARD SPECIFICATIONS, AND THE SPECIAL PROVISIONS, ALL MATERIALS AND WORKMANSHIP SHALL CONFORM TO THE CURRENT REQUIREMENTS OF THE NATIONAL ELECTRICAL CODE (NEC) THE NATIONAL ELECTRICAL SAFETY CODE, STANDARDS OF THE AMERICAN NATIONAL STANDARDS INSTITUTE (ANSI), AND ANY LOCAL ORDINANCES WHICH MAY APPLY.
3. NO UTILITY INFRASTRUCTURE IS TO BE LOCATED WITHIN ONE FOOT OF A SURVEY MONUMENT LOCATION SHOWN ON THE SUBDIVISION PLAT PER ORS 92.044 (7)
4. COORDINATE WORK WITH LISA GUARNERO WITH PGE AT (503) 742-8299 TO DETERMINE POWER SOURCE FOR THE STREET LIGHTS.

SCALE: 1"= 30 FEET
30 0 12 18 24 30

AKS ENGINEERING & FORESTRY, LLC
12965 SW HERMAN RD STE 100
TUALATIN, OR 97062
P: 503.563.6151
F: 503.563.6152
aks-eng.com

ENGINEERING · SURVEYING · NATURAL RESOURCES
FORESTRY · PLANNING · LANDSCAPE ARCHITECTURE

KNOLLCREST SUBDIVISION

WEST LINN OREGON
TAX LOTS 100 & 200 CLACKAMAS COUNTY, TAX MAP 2 1E 25CC

STREET LIGHTING PLAN

DESIGNED BY:	CLR
DRAWN BY:	NSL/AMF
CHECKED BY:	RSW
SCALE:	AS NOTED

DATE: 07/30/2018

REGISTERED PROFESSIONAL ENGINEER 58542PE OREGON JULY 9, 2002 MONTGOMERY B. HURLEY
RENEWAL DATE: 6/30/19

REVISIONS

JOB NUMBER
5132

SHEET
C111

AKS DRAWING FILE: 5132 C100 LIGHTING.DWG | LAYOUT: C111

KNOLLCREST SUBDIVISION

STORM DRAINAGE CONSTRUCTION PLANS

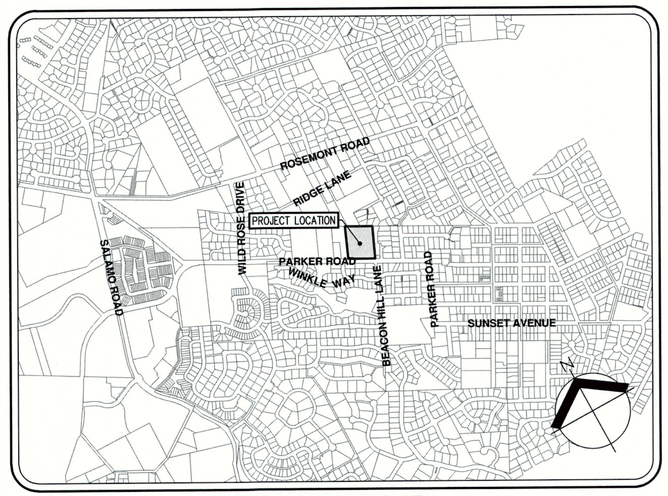

VICINITY MAP

SCALE: 1" = 500'

STORM DRAINAGE CONSTRUCTION NOTES

1. ALL CONSTRUCTION AND MATERIALS SHALL COMPLY WITH THESE PLANS AND THE APPLICABLE REQUIREMENTS OF THE CITY OF WEST LINN.
2. ALL BACKFILL IN THE PUBLIC RIGHT-OF-WAY SHALL BE CRUSHED ROCK PER CITY OF WEST LINN STANDARDS.
3. STORM SEWER PIPE SHALL BE AS SHOWN ON THE PLANS, OR EQUAL IF APPROVED IN ADVANCE, IN WRITING BY THE CITY. ALL JOINTS SHALL BE GASKETED UNLESS APPROVED IN WRITING BY CITY OF WEST LINN.
4. POLYVINYL CHLORIDE (PVC) PIPE SHALL CONFORM TO THE REQUIREMENTS OF ASTM D-3034, SDR 35 UNLESS OTHERWISE SPECIFIED AS CONFORMING TO AWWA C-900. GASKETS SHALL CONFORM TO THE REQUIREMENTS OF ASTM 477 AND ASTM 3212. HDPE (HIGH DENSITY POLYETHYLENE) PIPE CONFORMING TO AASHTO M-252 (8-INCH TO 10-INCH) OR AASHTO M-294 (12-INCH TO 18-INCH). FOR SLOPES LESS THAN 6% THE PIPE SHALL BE ADS N-12 IB ST, HANCORE SURE-LOK F477, OR APPROVED EQUAL. FOR SLOPES GREATER THAN 6% THE PIPE SHALL BE ADS N-12 IB WT, HANCOR BLUE SEAL, OR APPROVED EQUAL WITH WATERTIGHT PRESSURE TESTABLE FITTINGS.
5. HIGH DENSITY POLYETHYLENE PIPE (HDPE) SMOOTH INTERIOR, CORRUGATED EXTERIOR HDPE SEWER PIPE (ADS N-12 OR APPROVED EQUIVALENT) AND ASSOCIATED HDPE FITTINGS SHALL CONFORM TO AASHTO M294, AASHTO 252, ASTM 405, OR ASTM 667.
6. THE FOLLOWING MAY BE USED AS AN ALTERNATIVE AS APPROVED BY ENGINEERING: HIGH PERFORMANCE POLYPROPYLENE (HP3) SMOOTH INTERIOR, CORRUGATED EXTERIOR HP3 SEWER PIPE (12" TO 30") AS PER ASTM F2736 AND SMOOTH INTERIOR AND SMOOTH EXTERIOR HP3 SEWER PIPE ENCASING A CORRUGATED LAYER (30' TO 60") AS PER ASTM 2764. ASSOCIATED HP3 FITTINGS SHALL CONFORM TO ASTM D3212.
7. DUCTILE IRON PIPE SHALL BE CLASS 50 WALL THICKNESS FOR PIPE SIZES UP TO 12"; CLASS 51 WALL THICKNESS FOR 14" PIPE SIZES AND LARGER.
8. THE CONTRACTOR SHALL AT ALL TIMES ABIDE BY APPLICABLE SAFETY RULES OF O.S.H.A. AND IN PARTICULAR THOSE PERTAINING TO ADEQUATE SHORING AND TRENCH PROTECTION.
9. THE CONTRACTOR SHALL TEST ALL STORM SEWER PIPE FOR DEFLECTION AS PER CITY OF WEST LINN STANDARDS. THE TEST SHALL BE CONDUCTED BY PULLING A SOLID POINTED MANDREL 95% OF INSIDE DIAMETER THROUGH THE PIPELINE ON A MANHOLE TO MANHOLE BASIS. A COPY OF THE TEST RESULTS SHALL BE SUBMITTED TO THE PROJECT ENGINEER AND THE CITY. THE PROJECT ENGINEER SHALL BE PRESENT FOR ALL TESTING.
10. THE CONTRACTOR SHALL FLUSH THE ENTIRE STORM SEWER SYSTEM AND VIDEO INSPECT ALL STORM SEWER PIPE. A COPY OF THE REPORT AND VIDEO SHALL BE SUBMITTED TO THE PROJECT ENGINEER AND THE CITY. THE PROJECT ENGINEER SHALL BE PRESENT FOR ALL TESTING.
11. CATCH BASINS SHALL BE PRECAST OR POURED IN PLACE CONCRETE WITH A MINIMUM COMPRESSIVE STRENGTH OF 3300 PSI.
12. IF DURING THE COURSE OF INSTALLING UNDERGROUND UTILITIES, DRAIN TILES ARE ENCOUNTERED, THE CONTRACTOR SHALL NOTIFY THE DESIGN ENGINEER AND THE CITY TO DETERMINE HOW THE TILES WILL BE ROUTED AS SUCH TO BYPASS THE ONSITE STORM DETENTION SYSTEM. IF BYPASSING THE STORM DETENTION SYSTEM CANNOT BE ACCOMPLISHED, THEN THE TILES SHALL BE FOLLOWED THROUGH THE SITE, EXCAVATED, CRUSHED AND THE TRENCH RE-COMPACTED TO ELIMINATE THE PATH OF FLOW. ALL WORK SHALL BE COMPLETED BY THE CONTRACTOR AT THE OWNERS EXPENSE.
13. ALL STORM SEWER PIPE CONNECTIONS TO CATCH BASINS, MANHOLES, AND OTHER RELATED STRUCTURES SHALL BE WATER TIGHT AS PER THE CITY OF WEST LINN STANDARDS. THE CONNECTIONS SHALL BE FINISHED WITH PORTLAND CEMENT GROUT.
14. ALL STORM SEWER PIPE SHALL HAVE A MINIMUM DESIGN SERVICE LIFE OF 75 YEARS AS PER OREGON DEPARTMENT OF TRANSPORTATION STANDARDS.
15. THE PROJECT ENGINEER SHALL VERIFY ALL SERVICE LATERALS PRIOR TO PLACEMENT OF BACKFILL.
16. THE CONTRACTOR SHALL KEEP RECORDS OF ALL CONSTRUCTION THAT DIFFERS FROM THE APPROVED PLANS AND SHALL MAINTAIN "RECORD DRAWINGS" DURING THE CONSTRUCTION PERIOD. "RECORD DRAWINGS" SHALL BE SUBMITTED TO THE ENGINEER AT THE END OF THE PROJECT.
17. THE CONTRACTOR SHALL NOTIFY THE PROJECT ENGINEER 48 HOURS PRIOR TO THE START OF STORM SEWER CONSTRUCTION (OR AFTER AN INTERVAL IF NOT WORKING ON THE STORM SEWER) AND ANY STAGED INSPECTION.
18. MANHOLES SHALL BE PRECAST CONCRETE SECTIONS WITH MINIMUM INSIDE DIAMETER OF 48 INCHES, CONFORMING TO THE REQUIREMENTS OF ASTM C-478, EXCEPT AS NOTED ON THE PLANS, PRECAST MANHOLE RISERS, TOPS, AND BASE SHALL HAVE A MINIMUM COMPRESSIVE STRENGTH OF 4000 PSI. TOPS SHALL BE ECCENTRIC CONES EXCEPT WHERE FLAT TOPS ARE REQUIRED PER STANDARD DETAILS. POURED IN PLACE MANHOLES WITH A MINIMUM COMPRESSIVE STRENGTH OF 3300 PSI MAY BE SUBSTITUTED.
19. AFTER THE CONTRACTOR HAS BACKFILLED THE PIPE ZONE OF THE TRENCH AS REQUIRED, THE CONTRACTOR SHALL THEN BACKFILL THE BALANCE OF THE TRENCH, WITH THE TYPE OF BACKFILL SPECIFIED, IN ONE FOOT (1') LAYERS, MECHANICALLY COMPACTING EACH LAYER TO 95% IN STREETS AND 85% IN OTHER AREAS PER AASHTO T-180. IN PLACE DENSITY SHALL BE DETERMINED PER AASHTO T-191, T-205, OR T-238. ANY SUBSEQUENT SETTLEMENT OF THE TRENCH OR DITCH DURING THE GUARANTEE PERIOD SHALL BE CONSIDERED TO BE THE RESULT OF IMPROPER COMPACTION AND SHALL BE PROMPTLY CORRECTED BY THE CONTRACTOR AT NO EXPENSE TO THE DISTRICT OR THE OWNER.
20. UNLESS OTHERWISE SPECIFIED ON THE PLANS OR DIRECTED BY THE PROJECT ENGINEER, EACH SERVICE CONNECTION SHALL BE LAID IN A SEPARATE TRENCH ON A STRAIGHT LINE AND GRADIENT FROM THE TEE TO THE END OF THE SERVICE CONNECTION. AT THE PROPERTY LINE, THE SERVICE CONNECTION SHALL BE AT LEAST 4 FEET BELOW THE GRADE OF THE STREET CENTER LINE. NO SERVICE CONNECTION SHALL BE LAID ON A SLOPE OF LESS THAN TWO PERCENT (PER DETAIL), UNLESS OTHERWISE DIRECTED BY THE PROJECT ENGINEER OR SHOWN ON THE PLANS. THE PROJECT ENGINEER WILL PROVIDE A CUT STAKE AT THE TERMINAL POINT OF EACH SERVICE CONNECTION. UNLESS OTHERWISE DIRECTED BY THE PROJECT ENGINEER, THE CONTRACTOR WILL USE A GRADING LINE TO LAY THE PIPE, AND THE SERVICE CONNECTION SHALL BE INSTALLED WITH THE SAME ACCURACY AS THE MAIN SEWER.
21. EACH SERVICE CONNECTION SHALL BE PLUGGED WITH A RUBBER RING PLUG. A 2"X4" MARKER PAINTED WHITE SHALL BE PLACED AT THE END OF THE PIPE TO A POINT FOUR FOOT (4') ABOVE THE SURFACE OF THE GROUND. A DETECTABLE MAGNETIC TAPE WITH GREEN STRIPING AND BLACK LETTERS INDICATING "STORM DRAIN" AT REGULAR INTERVALS SHALL BE PLACED ALONG THE SERVICE CONNECTION FROM THE MAINLINE TEE TO THE GROUND SURFACE.
22. IN AREAS USED BY VEHICLES (PAVED OR UNPAVED STREETS) THE MANHOLE RIM SHALL MATCH THE FINISHED GRADES, IN OTHER AREAS THE HEIGHT OF THE MANHOLE RIM WILL NORMALLY BE ONE (1) FOOT ABOVE FINISHED GRADE, HIGH-WATER MARK, OR ABOVE TOP OF FUTURE FILL AREAS.
23. IN EASEMENT AREAS, ALL MANHOLES SHALL HAVE TAMPER-PROOF LIDS PER CITY OF WEST LINN SPECIFICATIONS, OR APPROVED EQUAL. (CAUTION: NOT ALL TAMPER-PROOF LIDS MEET CITY OF WEST LINN SPECIFICATIONS). THE RIM SHALL BE ONE FOOT (1') ABOVE FINISH GRADE.
24. THE CONTRACTOR SHALL AT ALL TIMES PROVIDE AND MAINTAIN AMPLE MEANS AND DEVICES TO REMOVE AND DISPOSE OF ALL WATER ENTERING THE TRENCH EXCAVATION DURING THE PROCESS OF LAYING THE PIPE. WATER AND DEBRIS SHALL NOT ENTER INTO THE DISTRICT'S SEWER SYSTEM. WATER AND DEBRIS SHALL BE DISPOSED OF IN AN APPROVED MANNER.
25. PRIOR TO THE COMMENCEMENT OF CONSTRUCTION THE CONTRACTOR SHALL APPLY FOR AND OBTAIN ALL NECESSARY PERMITS REQUIRED BY FEDERAL, STATE, AND CITY LAWS, CODES AND REGULATIONS.
26. STORM DRAINAGE SYSTEM SHALL BE CONSTRUCTED IN CONFORMANCE WITH THE UNIFORM PLUMBING CODE (UPC) AS AMENDED BY THE OREGON STATE PLUMBING SPECIALITY CODE.
27. CONTRACTOR SHALL INSTALL 18 GAUGE TRACER WIRE ON ALL PRIVATE STORM SEWER.
28. ALL PRIVATE STORM SEWER PIPING WILL NEED TO BE INSPECTED BY THE CITY PLUMBING DEPARTMENT.
29. BUILDING ROOF DRAIN LATERALS SHALL INCLUDE ALL NECESSARY PIPE MATERIALS AND FITTINGS (FUTURE).
30. GEOTECHNICAL ENGINEER SHALL INSPECT, TEST, AND CERTIFY THE POND EARTHWORK AND RETAINING WALL CONSTRUCTION.
31. INSTALL STORM DRAINAGE SERVICE LATERALS PER STANDARD DRAWING WL-218.
32. STORM DRAIN LINES, WHICH CONVEY WATER FROM BUILDING RAIN DRAINS AND/OR FOOTING DRAINS, MAIN BE A MINIMUM OF FOUR (4) INCHES IN DIAMETER. ALL PIPE SHALL HAVE RUBBER GASKET JOINTS.
33. ALL STORM DRAINAGE PIPING SHALL BE PVC ASTM D-3034 SDR 35 UNLESS NOTED OTHERWISE.
34. CONTRACTOR SHALL PROTECT SHALLOW LATERALS DURING INSTALLATION OF DRY UTILITIES.
35. PIPE SLOPES LISTED ARE BASED ON HORIZONTAL LENGTHS FROM CENTER OF STRUCTURE (E.G. MANHOLE) TO CENTER OF STRUCTURE (E.G. MANHOLE). INVERT ELEVATIONS (IES) LISTED AT STRUCTURES ARE BASED ON THE "THEORETICAL" IE AT THE CENTER OF THE STRUCTURE. FIELD STAKING IS BASED ON THESE PIPE SLOPES AND INVERT ELEVATIONS. FOR PIPES WITH STEEP SLOPES AND/OR SHORT PIPE RUNS, THE CONTRACTOR NEEDS TO MAKE ADJUSTMENTS FOR THE ACTUAL SLOPE FROM EDGE OF STRUCTURE TO EDGE OF STRUCTURE AND/OR MAKE SURE PRE-CAST STRUCTURES (E.G. MANHOLE BASE) ACCOMMODATES THE ACTUAL IE AT THE EDGE OF THE STRUCTURE.
36. CATCH BASIN AND CURB INLET LEAD LENGTHS NOTED ARE TO THE CENTER (MIDPOINT) OF STRUCTURE AT FACE OF CURB. FIELD STAKING IS BASED ON CENTER (MIDPOINT) OF STRUCTURE AT FACE OF CURB UNLESS OTHERWISE NOTED OR OTHER ARRANGEMENTS ARE MADE WITH THE PROJECT SURVEYOR.

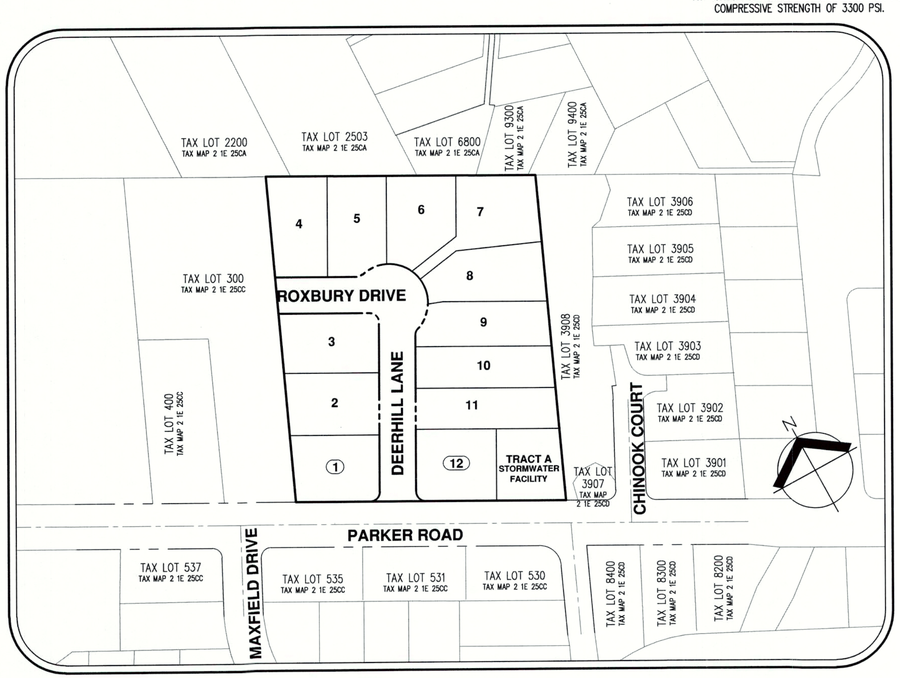

SITE MAP

SCALE: 1" = 100'

SHEET INDEX

C200 STORM DRAINAGE PLANS COVER SHEET

C201 STORM DRAINAGE PLAN AND PROFILE (STM 1)

C202 STORM DRAINAGE PLAN AND PROFILE (STM 2 & 3)

C203 STORMWATER FACILITY PLAN AND CROSS SECTIONS

C204 STORM DRAINAGE DETAILS

C205 STORM DRAINAGE DETAILS

AKS ENGINEERING & FORESTRY, LLC
12965 SW HERMAN RD STE 100
TUALATIN, OR 97062
P: 503.563.6151
F: 503.563.6152
aks-eng.com

AKS

ENGINEERING · SURVEYING · NATURAL RESOURCES
FORESTRY · PLANNING · LANDSCAPE ARCHITECTURE

KNOLLCREST SUBDIVISION

WEST LINN TAX LOTS 100 & 200

OREGON CLACKAMAS COUNTY TAX MAP 2 1E 25CC

STORM DRAINAGE PLANS COVER SHEET

DESIGNED BY:	CLR
DRAWN BY:	NSL/AMF
CHECKED BY:	RSW
SCALE:	AS NOTED

DATE: 07/30/2018

REGISTERED PROFESSIONAL ENGINEER 58542PE OREGON JULY 9, 2002 MONTGOMERY B. HURLEY

RENEWAL DATE: 6/30/19

REVISIONS

JOB NUMBER
5132

SHEET
C200

AKS DRAWING FILE: 5132 C000 COVER.DWG | LAYOUT: C200

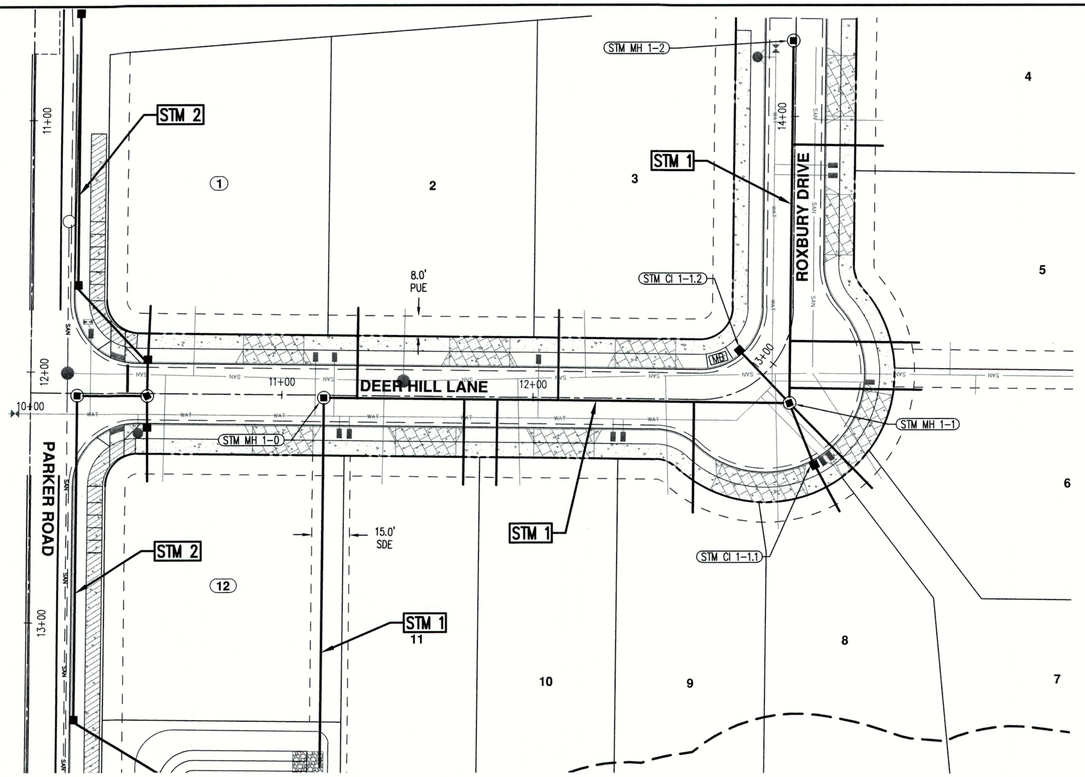

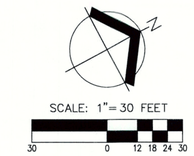

EASEMENT LEGEND

PUE: PUBLIC UTILITY EASEMENT
SDE: PUBLIC STORM DRAINAGE EASEMENT
SSE: PUBLIC SANITARY SEWER EASEMENT

STORM SEWER LATERAL TABLE

NAME	SIZE	LENGTH	SLOPE	MATERIAL	ALIGNMENT	STATION	IE @ END	COVER AT END
1	4"	23.00'	2.00%	ASTM D-3034	STM 2	2+31.04	532.40	5.45
2	4"	36.00'	6.00%	ASTM D-3034	STM 1	1+80.47	541.61	6.05
3	4"	36.00'	12.00%	ASTM D-3034	STM 1	2+60.47	552.97	6.14
4	4"	36.00'	5.00%	ASTM D-3034	STM 1	4+55.22	567.90	6.10
5	4"	51.24'	5.00%	ASTM D-3034	STM 1	3+77.21	563.59	6.15
6	4"	52.39'	6.00%	ASTM D-3034	STM 1	3+58.47	562.96	6.20
7	4"	47.14'	2.00%	ASTM D-3034	STM 1	3+52.47	562.08	5.73
8	4"	22.50'	2.00%	ASTM D-3034	STM 1	3+52.47	561.24	6.11
9	4"	44.01'	10.00%	ASTM D-3034	STM 1	3+14.58	559.26	6.02
10	4"	34.00'	9.00%	ASTM D-3034	STM 1	2+36.25	548.92	6.15
11	4"	34.00'	7.00%	ASTM D-3034	STM 1	2+23.06	546.73	6.09
12	4"	23.00'	2.00%	ASTM D-3034	STM 2	1+40.12	532.52	4.04

CATCH BASIN TABLE

CI	TFC @ ℄ CB	IE OUT	IE IN	SUMP	DEPTH*	PIPE	SLOPE	LENGTH	DS MH	STATION & OFFSET	ALIGNMENT	TYPE/DETAIL
STM CI 1-1.1	566.96	560.59	560.79	1.50'	7.87	10" PVC ASTM D-3034 SDR 35	0.0600	25.05 LF	STM MH 1-1	12+89.67 39.25 R	DEERHILL LANE	WL-600
STM CI 1-1.2	567.80	561.94		1.50'	7.36	10" PVC ASTM D-3034 SDR 35	0.0200	27.35 LF	STM MH 1-1	12+93.54 12.00 L	DEERHILL LANE	WL-600

*DEPTH IS DEFINED AS THE ELEVATION DIFFERENCE BETWEEN TOP FACE OF CURB AND BOTTOM OF SUMP ELEVATION.

NOTE:
ALL PUBLIC STORM SEWER CONSTRUCTION SHALL BE IN COMPLIANCE WITH THE CITY OF WEST LINN PUBLIC WORKS STANDARD CONSTRUCTION SPECIFICATIONS, DIVISION 6, STORM DRAIN TECHNICAL REQUIREMENTS.

VERTICAL DATUM:
ELEVATIONS ARE DERIVED BY TRIMBLE VRS NOW NETWORK, AND CHECKED AGAINST NGS BENCHMARK NO. QE1501, LOCATED ALONG HWY 99E AND THE JUNCTION OF INTERSTATE HWY 205 ELEVATION = 81.25 FEET (NAVD 88).

CATCH BASIN NOTES:

1. ALL CATCH BASINS SHALL BE CONSTRUCTED PER THE DETAIL AS NOTED IN THE CATCH BASIN TABLES.
2. TRENCH BACKFILL SHALL FOLLOW WEST LINN DETAIL 200 WITHIN THE RIGHT-OF-WAY.
3. CATCH BASIN LEADS SHALL BE PVC ASTM D-3034 SDR 35 UNLESS OTHERWISE NOTED.
4. CATCH BASINS ARE STAKED TO CENTER AT TOP FACE OF CURB.

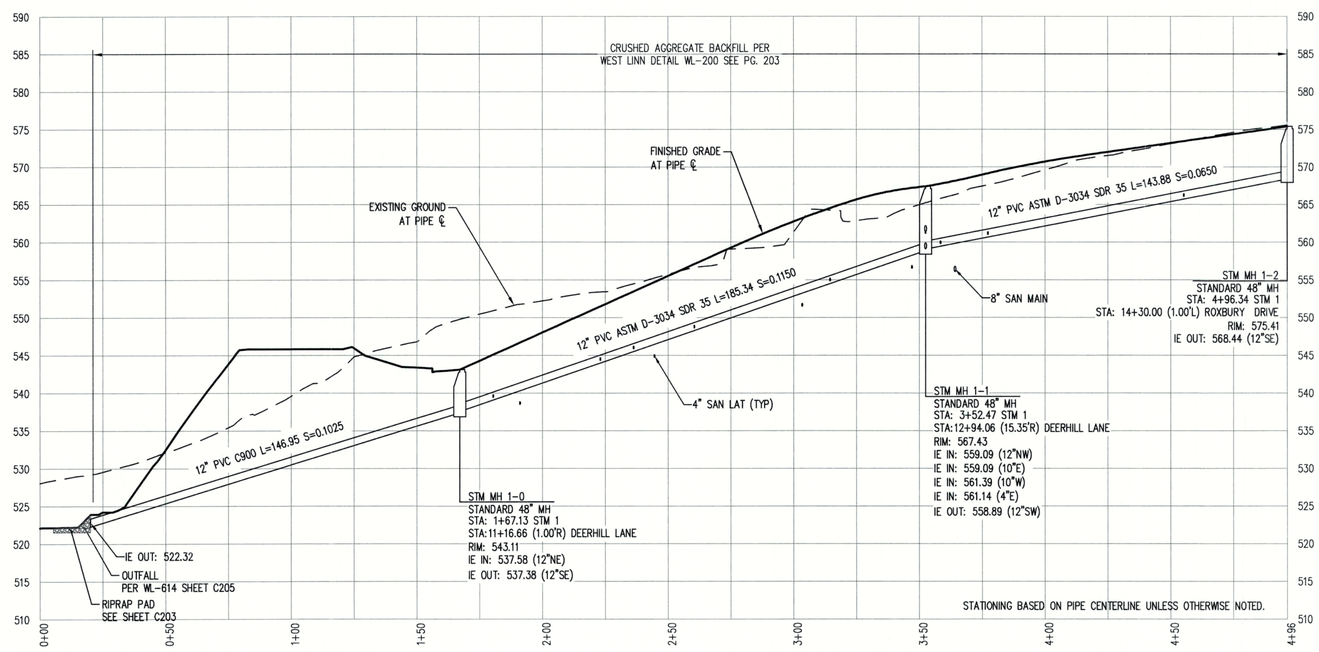

STM 1
HOR: 1"= 5'
VERT: 1"= 2'

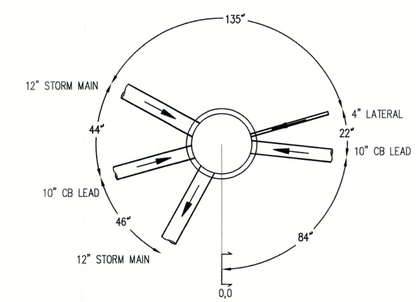

RIM=567.43

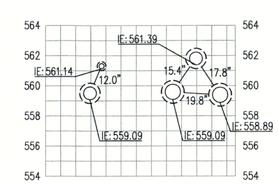

STM MH 1-1 – 48" MH
HORZ: 1"=5'
VERT: 1"=5'

AKS ENGINEERING & FORESTRY, LLC
12965 SW HERMAN RD STE 100
TUALATIN, OR 97062
P: 503.563.6151
F: 503.563.6152
aks-eng.com

ENGINEERING · SURVEYING · NATURAL RESOURCES
FORESTRY · PLANNING · LANDSCAPE ARCHITECTURE

KNOLLCREST SUBDIVISION

WEST LINN OREGON
TAX LOTS 100 & 200 CLACKAMAS COUNTY TAX MAP 2 1E 25CC

STORM DRAINAGE PLAN AND PROFILE (STM 1)

DESIGNED BY:	CLR
DRAWN BY:	NSL/AMF
CHECKED BY:	RSW
SCALE:	AS NOTED
DATE: 07/30/2018	

REGISTERED PROFESSIONAL ENGINEER 58542PE OREGON MAY 9, 2012 MONTGOMERY B. HURLEY
RENEWAL DATE: 6/30/19

REVISIONS

JOB NUMBER
5132

SHEET
C201

AKS DRAWING FILE: 5132 C200 STM.DWG | LAYOUT: STM 201

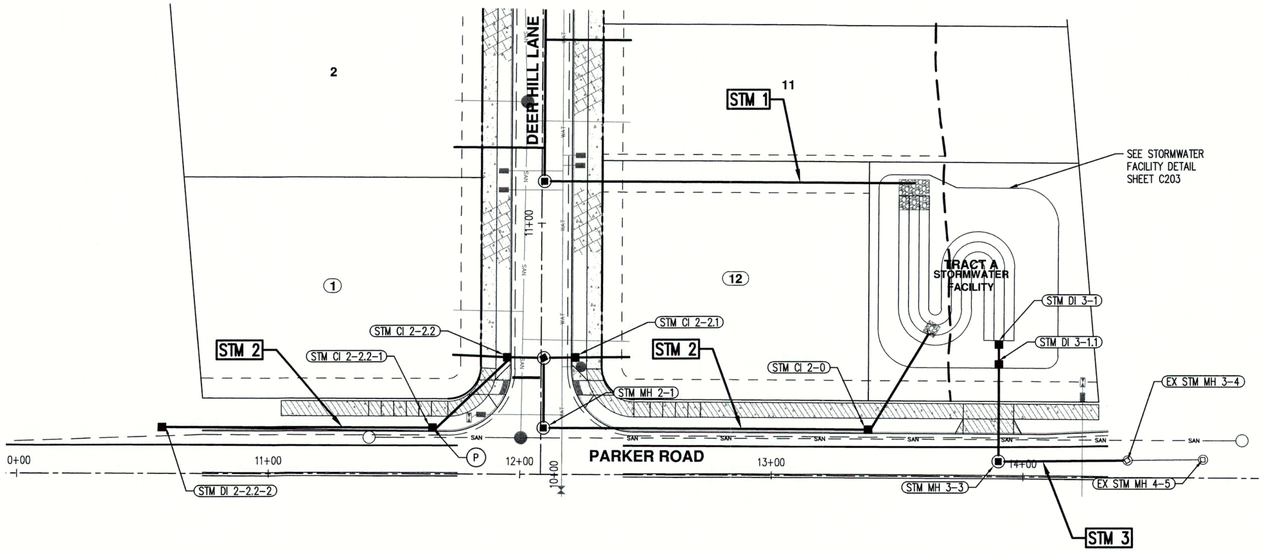

SCALE: 1"= 30 FEET

30 0 12 18 24 30

PUBLIC STORMWATER DRAINAGE KEYED NOTES

(P) POTHOLE
CONTRACTOR SHALL POTHOLE AND VERIFY EXISTING SANITARY SEWER LOCATION AND DEPTH. COORDINATE WITH PROJECT ENGINEER IF CONFLICTS ARE APPARENT, PRIOR TO ORDERING MATERIALS.

NOTE:
ALL PUBLIC STORM SEWER CONSTRUCTION SHALL BE IN COMPLIANCE WITH THE CITY OF WEST LINN PUBLIC WORKS STANDARD CONSTRUCTION SPECIFICATIONS, DIVISION 6, STORM DRAIN TECHNICAL REQUIREMENTS.

VERTICAL DATUM:
ELEVATIONS ARE DERIVED BY TRIMBLE VRS NOW NETWORK, AND CHECKED AGAINST NGS BENCHMARK NO. QE1501, LOCATED ALONG HWY 99E AND THE JUNCTION OF INTERSTATE HWY 205 ELEVATION = 81.25 FEET (NAVD 88).

EASEMENT LEGEND
PUE: PUBLIC UTILITY EASEMENT
SDE: PUBLIC STORM DRAINAGE EASEMENT
SSE: PUBLIC SANITARY SEWER EASEMENT

CATCH BASIN NOTES:
1. ALL CATCH BASINS SHALL BE CONSTRUCTED PER THE DETAIL AS NOTED IN THE CATCH BASIN TABLES.
2. TRENCH BACKFILL SHALL FOLLOW WEST LINN DETAIL 200 WITHIN THE RIGHT-OF-WAY.
3. CATCH BASIN LEADS SHALL BE PVC ASTM D-3034 SDR 35 UNLESS OTHERWISE NOTED.
4. CATCH BASINS ARE STAKED TO CENTER AT TOP FACE OF CURB.

CATCH BASIN TABLE

CI	TFC @ ℄ CB	IE OUT	IE IN	SUMP	DEPTH*	PIPE	SLOPE	LENGTH	DS MH	STATION & OFFSET	ALIGNMENT	TYPE/DETAIL
STM CI 2-0	526.97	523.83	523.83	1.50'	4.64	12" PVC C900	0.0400	46.10 LF	STM FACILITY	13+38.43 17.00 L	PARKER ROAD	WL-600
STM CI 2-2.1	536.18	531.86	532.06	1.50'	5.82	10" PVC C900	0.0200	11.00 LF	STM MH 2-2	10+46.55 12.00 R	DEERHILL LANE	WL-601
STM CI 2-2.2	536.00	531.74	531.94 531.94	1.50'	5.76	12" PVC C900	0.0100	13.00 LF	STM MH 2-2	10+46.55 12.00 L	DEERHILL LANE	WL-601
STM CI 2-2.2-1	539.57	536.22	536.42	1.50'	4.85	12" PVC C900	0.1000	42.84 LF	STM CI 2-2.2	11+65.26 17.00 L	PARKER ROAD	WL-601
STM DI 2-2.2-2	543.13	539.56		1.50'	5.07	12" PVC C900	0.0300	104.65 LF	STM CI 2-2.2-1	10+59.11 18.49 L	PARKER ROAD	WL-603**
STM DI 3-1	521.50	518.81		1.50'	4.19	12" PVC ASTM D-3034 SDR 35	0.0100	7.94 LF	STM DI 3-1.1	13+90.23 54.20 L	PARKER ROAD	WL-603
STM DI 3-1.1	524.01	518.53	518.73	1.50'	6.98	12" PVC ASTM D-3034 SDR 35	0.0200	40.18 LF	STM MH 3-3	13+90.23 46.25 L	PARKER ROAD	WL-603

*DEPTH IS DEFINED AS THE ELEVATION DIFFERENCE BETWEEN TOP FACE OF CURB AND BOTTOM OF SUMP ELEVATION.
**TO BE USED AS AREA DRAIN, NO CURB PRESENT.

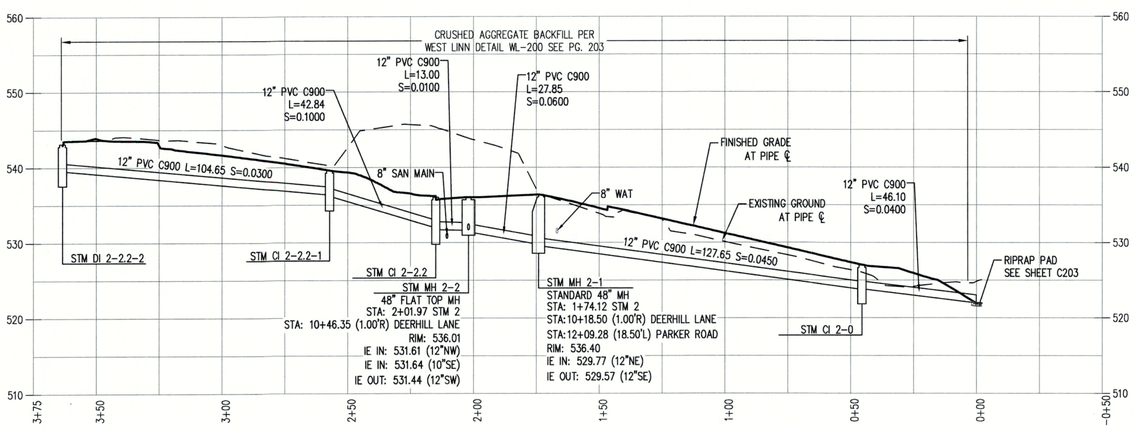

STATIONING BASED ON PIPE CENTERLINE UNLESS OTHERWISE NOTED.

STM 2
Hor. Scale: 1"= 5'
Vert. Scale: 1"= 2'

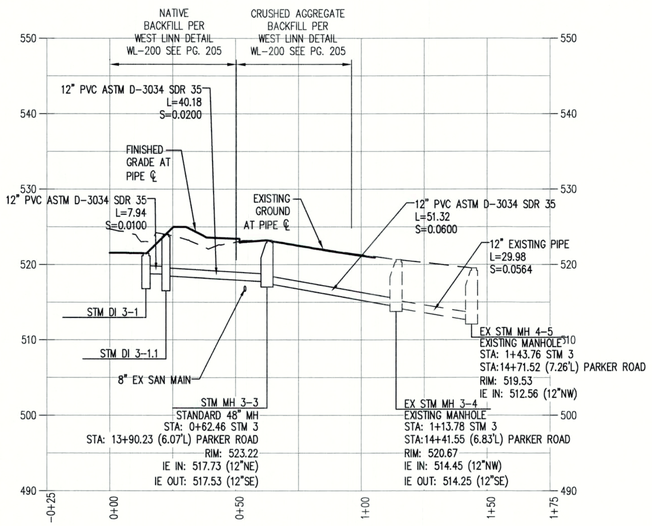

STATIONING BASED ON PIPE CENTERLINE UNLESS OTHERWISE NOTED.

STM 3
Hor. Scale: 1"= 5'
Vert. Scale: 1"= 2'

AKS ENGINEERING & FORESTRY, LLC
12965 SW HERMAN RD STE 100
TUALATIN, OR 97062
P: 503.563.6151
F: 503.563.6152
aks-eng.com

AKS
ENGINEERING · SURVEYING · NATURAL RESOURCES
FORESTRY · PLANNING · LANDSCAPE ARCHITECTURE

KNOLLCREST SUBDIVISION
WEST LINN OREGON
TAX LOTS 100 & 200
CLACKAMAS COUNTY TAX MAP 2 1E 25CC

STORM DRAINAGE PLAN AND PROFILE (STM 2 & 3)

DESIGNED BY:	CLR
DRAWN BY:	NSL/AMF
CHECKED BY:	RSW
SCALE:	AS NOTED
DATE: 07/30/2018	

REGISTERED PROFESSIONAL ENGINEER
58542PE
OREGON
JULY 9, 2002
MONTGOMERY B. HURLEY
RENEWAL DATE: 6/30/19

REVISIONS

JOB NUMBER
5132

SHEET
C202

AKS DRAWING FILE: 5132 C200 STM.DWG | LAYOUT: STM 202

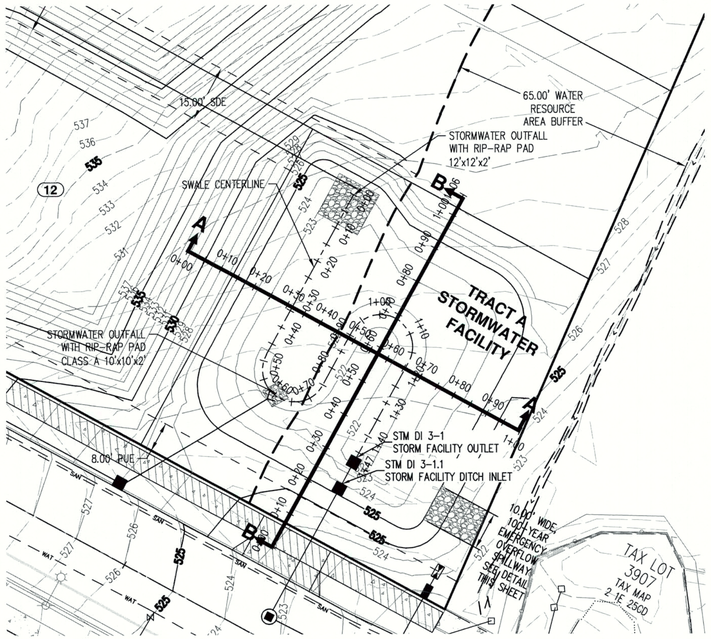

SCALE: 1"=20 FEET

NOTE:
THE STORMWATER FACILITY CONSISTS OF A DRY POND FOR DETENTION WITH A SWALE ALONG THE BOTTOM FOR WATER QUALITY.

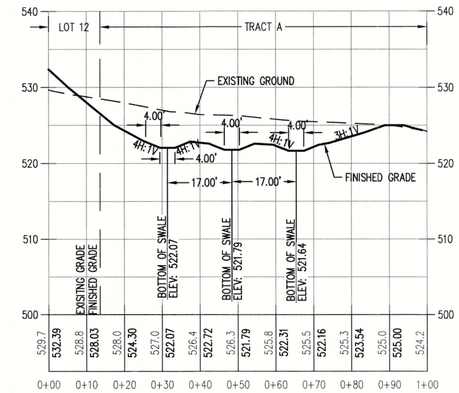

CROSS-SECTION A-A
Hor. Scale: 1"= 20'
Vert. Scale: 1"= 10'

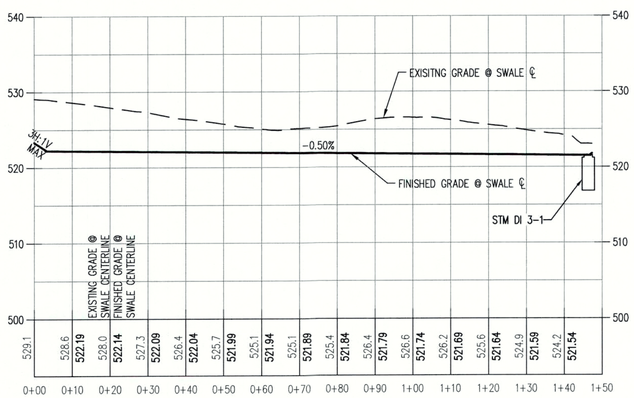

SWALE
Hor. Scale: 1"= 20'
Vert. Scale: 1"= 10'

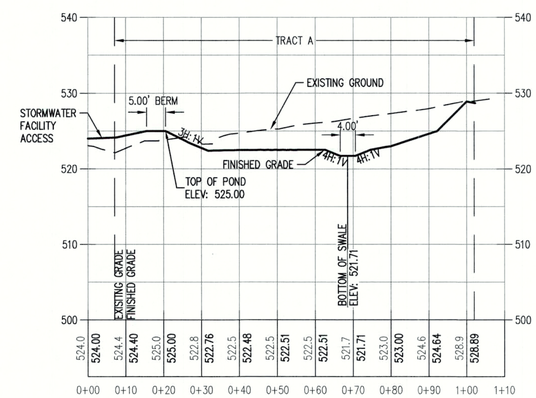

CROSS-SECTION B-B
Hor. Scale: 1"= 20'
Vert. Scale: 1"= 10'

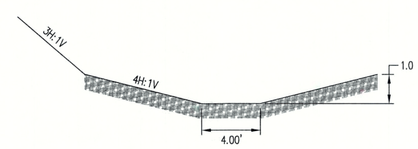

DIMENSIONED SWALE CROSS-SECTION
NOT TO SCALE

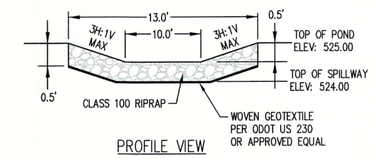

PROFILE VIEW
NOT TO SCALE

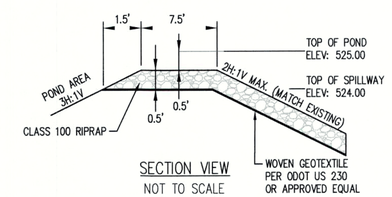

SECTION VIEW
NOT TO SCALE

EMERGENCY OVERFLOW SPILLWAY

STORMWATER FACILITY CONSTRUCTION NOTES

1. SURFACE SHALL BE WETTED PRIOR TO PLACEMENT OF CLEAN STRIPPINGS (TOPSOIL). TOPSOIL SHALL BE LIGHTLY COMPACTED AND TRACKED IN. CONTRACTOR SHALL ENSURE NO SLOUGHING.
2. REFER TO SHEET L102 FOR STORMWATER FACILITY PLANTING PLAN AND SWALE SURFACE AND SOIL REQUIREMENTS.
3. TEMPORARY EROSION CONTROL MEASURES (INCLUDING TEMPORARY SEEDING) SHALL BE MAINTAINED THROUGHOUT CONSTRUCTION.
4. STORMWATER FACILITY SIDES SHALL BE CONSTRUCTED AT 3H:1V MAXIMUM SLOPE.
5. THE CONTRACTOR SHALL NOTIFY THE PROJECT'S GEOTECHNICAL ENGINEER PRIOR TO ANY CONSTRUCTION ACTIVITIES ON THE STORMWATER FACILITY. THE CONTRACTOR SHALL COMPLY WITH THE FIELD RECOMMENDATIONS MADE BY THE PROJECT'S GEOTECHNICAL ENGINEER.

CONTOUR LEGEND

EXISTING GROUND CONTOUR (1 FT)	99
EXISTING GROUND CONTOUR (5 FT)	100
FINISHED GRADE CONTOUR (1 FT)	100
FINISHED GRADE CONTOUR (5 FT)	99

AKS ENGINEERING & FORESTRY, LLC
12965 SW HERMAN RD STE 100
TUALATIN, OR 97062
P: 503.563.6151
F: 503.563.6152
aks-eng.com

ENGINEERING · SURVEYING · NATURAL RESOURCES
FORESTRY · PLANNING · LANDSCAPE ARCHITECTURE

KNOLLCREST SUBDIVISION

WEST LINN OREGON
TAX LOTS 100 & 200 CLACKAMAS COUNTY TAX MAP 2-1E-25CC

STORMWATER FACILITY PLAN AND CROSS SECTIONS

DESIGNED BY:	CLR
DRAWN BY:	NSL/AMF
CHECKED BY:	RSW
SCALE:	AS NOTED

DATE: 07/30/2018

REGISTERED PROFESSIONAL ENGINEER 58542PE OREGON JULY 9, 2013 MONTGOMERY B. HURLEY
RENEWAL DATE: 6/30/19

REVISIONS

JOB NUMBER
5132

SHEET
C203

AKS DRAWING FILE: 5132 C200 STORMWATER FACILITY.DWG | LAYOUT: C203

THIS DETAIL DRAWING SHALL NOT BE ALTERED OR CHANGED IN ANY MANNER EXCEPT BY THE CITY ENGINEER. IT IS THE RESPONSIBILITY OF THE USER TO ACQUIRE THE MOST CURRENT VERSION OF THE DETAIL.

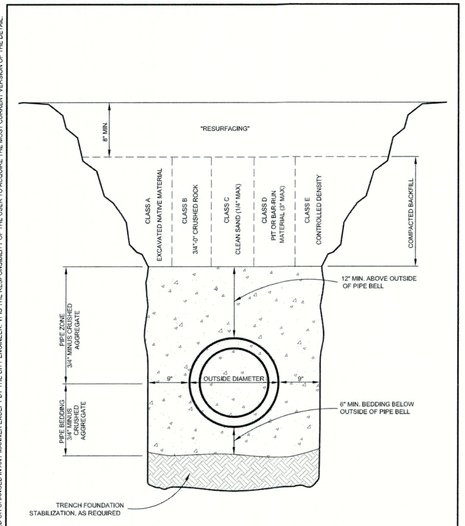

TRENCH BACKFILL BEDDING AND PIPE ZONE

City of West Linn | DATE: 2010 | DRAWING NO. WL-200 | FILE NO.

THIS DETAIL DRAWING SHALL NOT BE ALTERED OR CHANGED IN ANY MANNER EXCEPT BY THE CITY ENGINEER. IT IS THE RESPONSIBILITY OF THE USER TO ACQUIRE THE MOST CURRENT VERSION OF THE DETAIL.

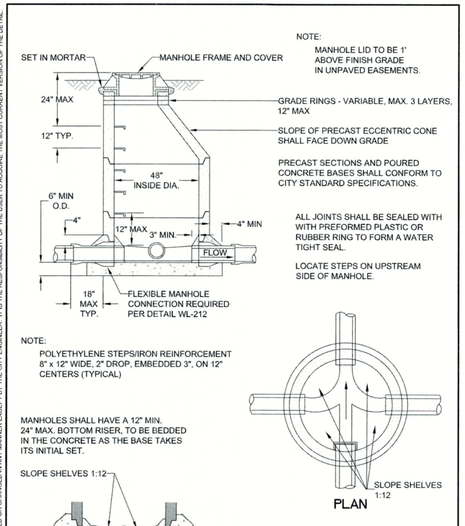

STANDARD MANHOLE FOR LESS THAN 36" PIPE

City of West Linn | DATE: 2010 | DRAWING NO. WL-207 | FILE NO.

THIS DETAIL DRAWING SHALL NOT BE ALTERED OR CHANGED IN ANY MANNER EXCEPT BY THE CITY ENGINEER. IT IS THE RESPONSIBILITY OF THE USER TO ACQUIRE THE MOST CURRENT VERSION OF THE DETAIL.

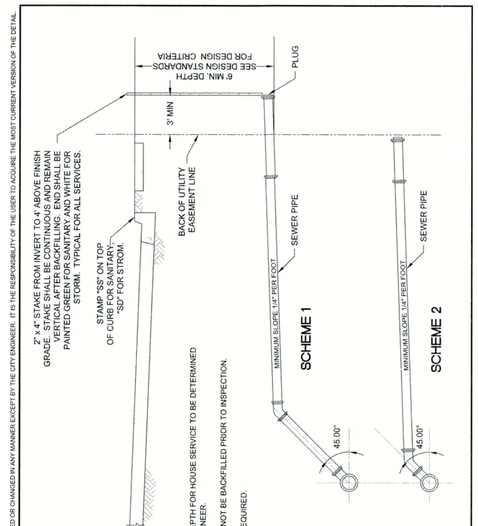

SERVICE BRANCH

City of West Linn | DATE: 2010 | DRAWING NO. WL-218 | FILE NO.

THIS DETAIL DRAWING SHALL NOT BE ALTERED OR CHANGED IN ANY MANNER EXCEPT BY THE CITY ENGINEER. IT IS THE RESPONSIBILITY OF THE USER TO ACQUIRE THE MOST CURRENT VERSION OF THE DETAIL.

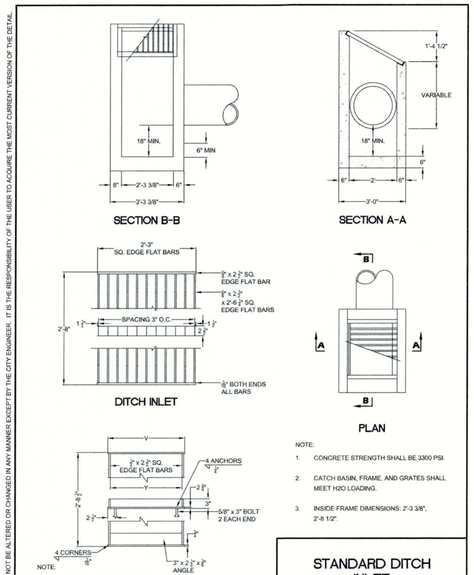

INLET TYPE	V	Y	Y1	NO. OF BARS	TYPE
D	2'-4 3/4"	2'-3 3/8"	2'-3"	9	1

NOTE:
1. CONCRETE STRENGTH SHALL BE 3300 PSI.
2. CATCH BASIN, FRAME, AND GRATES SHALL MEET H20 LOADING.
3. INSIDE FRAME DIMENSIONS: 2'-3 3/8", 2'-8 1/2".

STANDARD DITCH INLET

City of West Linn | DATE: 2010 | DRAWING NO. WL-603 | FILE NO.

THIS DETAIL DRAWING SHALL NOT BE ALTERED OR CHANGED IN ANY MANNER EXCEPT BY THE CITY ENGINEER. IT IS THE RESPONSIBILITY OF THE USER TO ACQUIRE THE MOST CURRENT VERSION OF THE DETAIL.

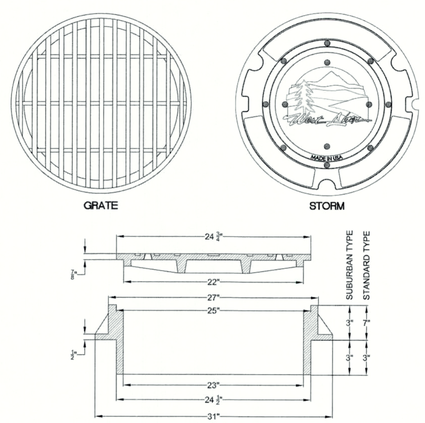

MANHOLE FRAME AND COVER

City of West Linn | DATE: 2010 | DRAWING NO. WL-605 | FILE NO.

THIS DETAIL DRAWING SHALL NOT BE ALTERED OR CHANGED IN ANY MANNER EXCEPT BY THE CITY ENGINEER. IT IS THE RESPONSIBILITY OF THE USER TO ACQUIRE THE MOST CURRENT VERSION OF THE DETAIL.

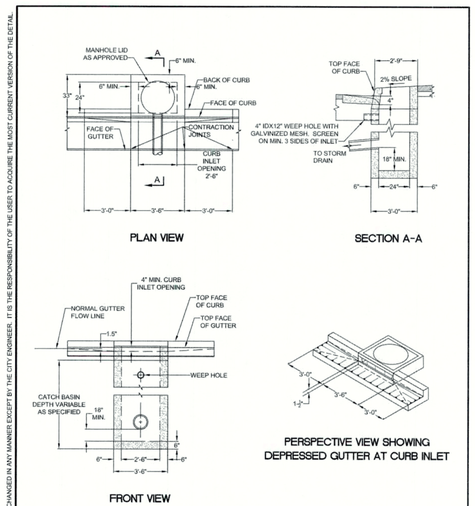

GUTTER INLET 2 1/2 A

City of West Linn | DATE: 2010 | DRAWING NO. WL-600 | FILE NO.

THIS DETAIL DRAWING SHALL NOT BE ALTERED OR CHANGED IN ANY MANNER EXCEPT BY THE CITY ENGINEER. IT IS THE RESPONSIBILITY OF THE USER TO ACQUIRE THE MOST CURRENT VERSION OF THE DETAIL.

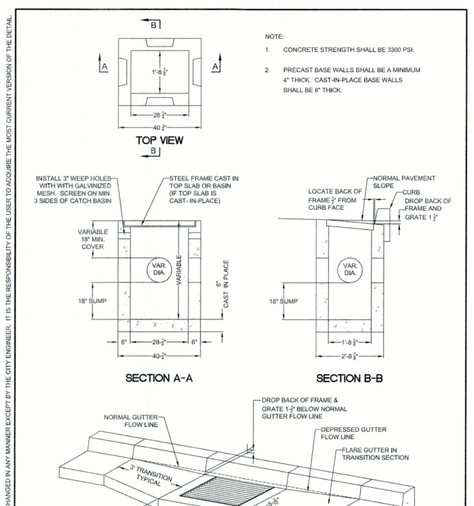

TYPE GI CATCH BASIN WITH SUMP

City of West Linn | DATE: 2010 | DRAWING NO. WL-602A | FILE NO.

AKS ENGINEERING & FORESTRY, LLC
12965 SW HERMAN RD STE 100
TUALATIN, OR 97062
P: 503.563.6151
F: 503.563.6152
aks-eng.com
AKS
ENGINEERING · SURVEYING · NATURAL RESOURCES
FORESTRY · PLANNING · LANDSCAPE ARCHITECTURE

KNOLLCREST SUBDIVISION

WEST LINN — OREGON
TAX LOTS 100 & 200 — CLACKAMAS COUNTY TAX MAP 2 1E 25CC

STORM DRAINAGE DETAILS

DESIGNED BY:	CLR
DRAWN BY:	NSL/AMF
CHECKED BY:	RSW
SCALE:	AS NOTED
DATE:	07/30/2018

REGISTERED PROFESSIONAL ENGINEER 58542PE OREGON JULY 9, 2002 MONTGOMERY B. HURLEY
RENEWAL DATE: 6/30/19

REVISIONS

JOB NUMBER 5132

SHEET C204

AKS DRAWING FILE: 5132 DETAILS.DWG | LAYOUT: C203

THIS DETAIL DRAWING SHALL NOT BE ALTERED OR CHANGED IN ANY MANNER EXCEPT BY THE CITY ENGINEER. IT IS THE RESPONSIBILITY OF THE USER TO ACQUIRE THE MOST CURRENT VERSION OF THE DETAIL.

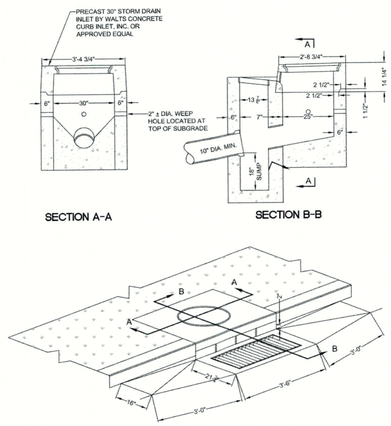

NOTE:

1. CAST IN PLACE CONCRETE TO BE 3300 PSI AND WEEP HOLE WITH GALVINIZED MESH. SCREEN ON MIN. 3 SIDES OF INLET.
2. MANHOLE RIMS AND COVERS AS MANUFACTURED BY HERN IRON WORKS, COEUR D' ALENE, IDAHO. COVER PATTERN NO. 2312, RIM PATTERN NO. 2311 OR APPROVED EQUAL.

COMBINATION CURB INLET

City of West Linn | DATE: 2010 | DRAWING NO. WL-601 | FILE NO.

THIS DETAIL DRAWING SHALL NOT BE ALTERED OR CHANGED IN ANY MANNER EXCEPT BY THE CITY ENGINEER. IT IS THE RESPONSIBILITY OF THE USER TO ACQUIRE THE MOST CURRENT VERSION OF THE DETAIL.

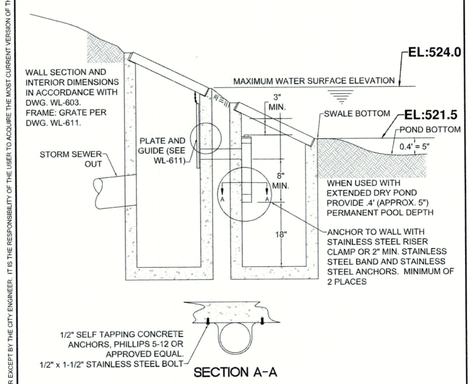

NOTE:

1. CONNECTING PIPE AND TEE SHALL BE 4", 6", OR 8" AWWA C-900 OR ASTM 3034 PVC,AND ONE SIZE LARGER THAN THE ORIFICE OPENING.
2. MAXIMUM ORIFICE OPENING SHALL BE 6" DIAMETER.
3. STRUCTURES SHALL CONFORM TO STANDARD DRAWING NO. 390 DITCH INLET.
4. FRAME AND GRATE SHALL CONFORM TO STANDARD DRAWING NO. 400, DITCH INLET FRAME AND GRATE.
5. PLATE AND GUIDE SHALL BE SECURED FLUSH AGAINST WALL OF STRUCTURE AS APPROVED.
6. MAINTAINANCE ACCESS REQUIRED TO WITHIN 10' OF CENTER OF BOTH STRUCTURES.

STANDARD DETENTION POND OUTLET

City of West Linn | DATE: 2010 | DRAWING NO. WL-610 | FILE NO.

THIS DETAIL DRAWING SHALL NOT BE ALTERED OR CHANGED IN ANY MANNER EXCEPT BY THE CITY ENGINEER. IT IS THE RESPONSIBILITY OF THE USER TO ACQUIRE THE MOST CURRENT VERSION OF THE DETAIL.

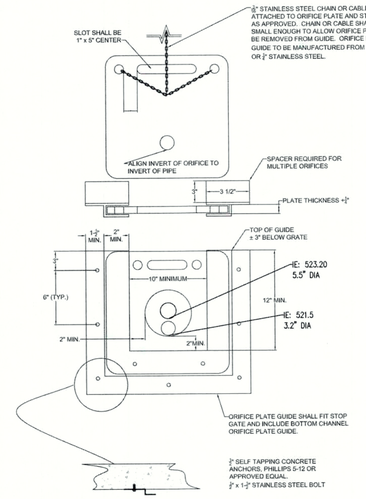

NOTE:

FOR MULTIPLE ORIFICE APPLICATION, A 3" MIN. SPACER IS REQUIRED AS SHOWN. SPACER TO MATCH PLATE GUIDE DIMENSIONS, WIDTH, MATERIAL WITH A WATER TIGHT SEAL.

PLATE AND GUIDE

City of West Linn | DATE: 2010 | DRAWING NO. WL-611 | FILE NO.

THIS DETAIL DRAWING SHALL NOT BE ALTERED OR CHANGED IN ANY MANNER EXCEPT BY THE CITY ENGINEER. IT IS THE RESPONSIBILITY OF THE USER TO ACQUIRE THE MOST CURRENT VERSION OF THE DETAIL.

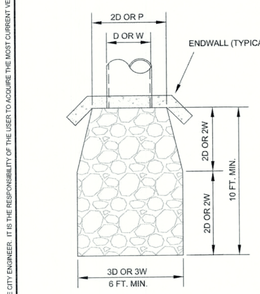

D = PIPE DIAMETER
W = BOTTOM WIDTH OF CHANNEL
P = WETTED PERIMETER OF CHANNEL

DESIGN VELOCITY FT./SEC	ROCK CLASSIFICATION BY WEIGHT
6 - 10	200 LBS.
10 - 12	1/4 TON
12 - 14	1/2 TON
14 - 16	1 TON
16 - 18	2 TON

SELECTION OF RIP RAP (SEE NOTE 1)

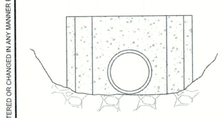

NOTE:

1. DIMENSIONS FOR RIP RAP APPLY TO FLOWS
   < 2 CFS RIP RAP FOR FLOWS
   > 2 CFS MUST BE DESIGNED BY AN ENGINEER. FLOWS > 20 FPS SHALL USE ENERGY DISSIPATOR
2. TYPE OF RIP RAP
   A. REGULAR QUARRY STONE CLASS 50-200
   B. COBBLESTONE
   C. CONCRETE (ONLY ALLOWED UPON APPROVAL OF THE CITY)
3. PLACEMENT
   A. MINIMUM DEPTH = 1 1/2 TIMES AVERAGE STONE SIZE.
   B. ROCKS SHALL BE PLACED TO PROVIDE A MINIMUM OF VOIDS.
   C. SURFACE ROCKS OR CONCRETE SHALL PROTRUDE AT LEAST 1/2 THEIR VERTICAL DIMENSION.
   D. RIP RAP IS TO BE PLACED OVER A NATURAL BEDDING, OR IT MAY BE GROUTED OR PLACED OVER A GRAVEL BEDDING AS REQUIRED BY THE CITY.

STORM SEWER OUTFALL

City of West Linn | DATE: 2010 | DRAWING NO. WL-614 | FILE NO.

AKS ENGINEERING & FORESTRY, LLC
12965 SW HERMAN RD STE 100
TUALATIN, OR 97062
P: 503.563.6151
F: 503.563.6152
aks-eng.com

ENGINEERING · SURVEYING · NATURAL RESOURCES
FORESTRY · PLANNING · LANDSCAPE ARCHITECTURE

KNOLLCREST SUBDIVISION

WEST LINN
TAX LOTS 100 & 200

OREGON
CLACKAMAS COUNTY TAX MAP 2 1E 25CC

STORM DRAINAGE DETAILS

DESIGNED BY:	CLR
DRAWN BY:	NSL/AMF
CHECKED BY:	RSW
SCALE:	AS NOTED

DATE: 07/30/2018

REGISTERED PROFESSIONAL ENGINEER 58548PE OREGON JULY 9, 2002 MONTGOMERY B. HURLEY

RENEWAL DATE: 6/30/19

REVISIONS

JOB NUMBER
5132

SHEET
C205

KNOLLCREST SUBDIVISION

SANITARY SEWER CONSTRUCTION PLANS

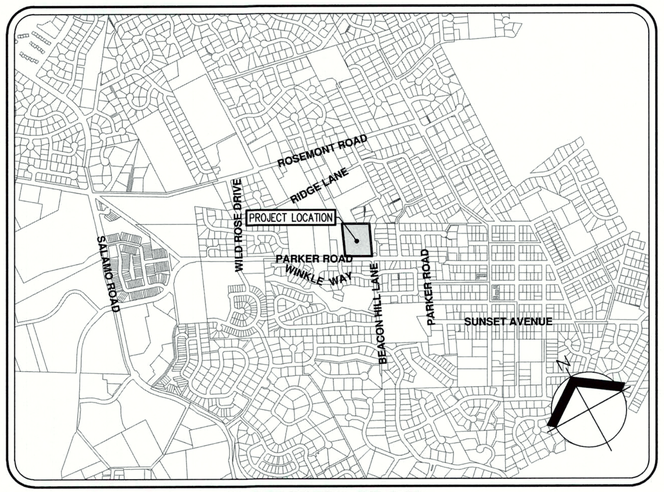

VICINITY MAP

SCALE: 1" = 500'

SANITARY SEWER CONSTRUCTION NOTES

1. ALL WORK AND MATERIALS SHALL CONFORM WITH THESE PLANS AND THE APPLICABLE REQUIREMENTS OF THE CONSTRUCTION STANDARDS AND SPECIFICATIONS OF THE CITY OF WEST LINN.

2. ALL BACKFILL IN THE PUBLIC RIGHT-OF-WAY SHALL BE CRUSHED ROCK PER CITY OF WEST LINN STANDARDS.

3. THE CONTRACTOR IS REQUIRED TO ATTEND A PRE-CONSTRUCTION CONFERENCE PRIOR TO BEGINNING WORK ON THE SANITARY SEWER. THE OWNER OR CONTRACTOR IS ALSO REQUIRED TO PROVIDE THE DISTRICT A WARRANTY BOND FOR THE NEW SANITARY SEWER MAINS AND SERVICE CONNECTIONS AT THE COMPLETION OF CONSTRUCTION.

4. THE CONTRACTOR, SHALL GIVE THE ENGINEER AT LEAST 48 HOURS NOTICE PRIOR TO BEGINNING WORK AT THE START OF CONSTRUCTION OR AFTER AN INTERVAL OF NOT WORKING ON THE SANITARY SEWER.

MATERIALS:

5. POLYVINYL CHLORIDE PIPE (PVC) SHALL CONFORM TO THE REQUIREMENTS OF ASTM D-3034, SDR 35, AND JOINT TYPE SHALL BE ELASTOMERIC GASKET CONFORMING TO ASTM D-3212.

6. MANHOLES TO BE PRECAST CONCRETE SECTIONS WITH MINIMUM INSIDE DIAMETER OF 48-INCHES, CONFORMING TO THE REQUIREMENTS OF ASTM C-478, EXCEPT AS NOTED ON THE PLANS. POURED IN PLACE MANHOLES MAY BE SUBSTITUTED.

INSTALLATION:

7. POLYVINYL CHLORIDE PIPE (PVC) SHALL BE INSTALLED IN ACCORDANCE WITH THE MANUFACTURER'S RECOMMENDATIONS. PVC SEWER PIPE SHALL BE CONNECTED TO CONCRETE MANHOLES BY MEANS OF AN APPROVED COUPLING WITH AN ELASTOMERIC GASKET, AN APPROVED WATERSTOP OR FLEXIBLE SLEEVE. USE OF PORTLAND CEMENT GROUT FOR CONNECTION OF PVC SEWER PIPE TO MANHOLES WILL NOT BE PERMITTED.

8. AFTER THE CONTRACTOR HAS BACKFILLED THE PIPE ZONE OF THE TRENCH AS REQUIRED, THEY SHALL THEN BACKFILL THE BALANCE OF THE TRENCH, WITH THE TYPE OF BACKFILL SPECIFIED, IN ONE FOOT (1') LAYERS, MECHANICALLY COMPACTING EACH LAYER TO 95% OF MAXIMUM DENSITY IN ROADWAYS AND 85% TO 90% IN ALL OTHER AREAS. MAXIMUM RELATIVE DENSITY SHALL BE DETERMINED PER AASHTO T-180. IN PLACE, DENSITY SHALL BE DETERMINED PER AASHTO T-191, T-205 OR T-238. ANY SUBSEQUENT SETTLEMENT OF THE TRENCH OR DITCH DURING THE GUARANTEE PERIOD SHALL BE CONSIDERED TO BE THE RESULT OF IMPROPER COMPACTION AND SHALL BE PROMPTLY CORRECTED BY THE CONTRACTOR AT NO EXPENSE TO THE DISTRICT OR THE OWNER.

9. SANITARY SEWER PIPE AND APPURTENANCES SHALL BE TESTED FOR LEAKAGE IN ACCORDANCE WITH CITY OF WEST LINN STANDARDS (301.03.09). LEAKAGE TESTS INCLUDE AN AIR TEST OF THE SEWER MAINS AND SERVICE CONNECTIONS AND A WATER EXFILTRATION TEST OR VACUUM TEST OF THE MANHOLES. ANY PORTION OF THE SEWER WHICH FAILS TO PASS THESE TESTS SHALL BE EXCAVATED, REPAIRED OR REALIGNED, AND RETESTED. IN ADDITION TO HYDROSTATIC OR AIR TESTING, SANITARY SEWERS CONSTRUCTED OF PVC SEWER PIPE SHALL BE DEFLECTION TESTED NO LESS THAN 30-DAYS AFTER THE TRENCH BACKFILL AND COMPACTION HAS BEEN COMPLETED. THE TEST SHALL BE CONDUCTED BY PULLING AN APPROVED SOLID POINTED MANDREL 95% OF THE INSIDE DIAMETER THROUGH THE PIPELINE ON A MANHOLE TO MANHOLE BASIS.

10. UNLESS OTHERWISE SPECIFIED ON THE PLANS OR DIRECTED BY THE ENGINEER, EACH SERVICE CONNECTION SHALL BE LAID IN A SEPARATE TRENCH ON A STRAIGHT LINE AND GRADIENT FROM THE TEE TO THE END OF THE SERVICE CONNECTION. AT THE PROPERTY LINE THE SERVICE CONNECTION SHALL BE AT LEAST 6 FEET BELOW THE GRADE OF THE STREET CENTER LINE. NO SERVICE CONNECTION SHALL BE LAID ON A SLOPE OF LESS THAN TWO PERCENT, UNLESS OTHERWISE DIRECTED BY THE ENGINEER OR SHOWN ON THE PLANS. THE ENGINEER WILL PROVIDE A CUT STAKE AT THE TERMINAL POINT OF EACH SERVICE CONNECTION. UNLESS OTHERWISE DIRECTED BY THE ENGINEER, THE CONTRACTOR WILL USE A GRADING LINE TO LAY THE PIPE AND THE SERVICE CONNECTION SHALL BE INSTALLED WITH THE SAME ACCURACY AS THE MAIN SEWER. EACH SERVICE CONNECTION SHALL BE PLUGGED WITH A RUBBER RING PLUG. A 2 X 4 MARKER PAINTED GREEN SHALL BE PLACED AT THE END OF EACH SERVICE CONNECTION, AND SHALL EXTEND FROM THE END OF THE PIPE TO A POINT FOUR FOOT (4') ABOVE THE SURFACE OF THE GROUND. A DETECTABLE GREEN MAGNETIC TAPE ("THORDURATEC SAFETY GREEN SANITARY SEWER RIBBON OR EQUAL") WITH THE WORD "SEWER" AT REGULAR INTERVALS SHALL BE PLACED ALONG THE SERVICE CONNECTION FROM THE MAINLINE TEE TO THE GROUND SURFACE.

11. IN EASEMENT AREAS ALL MANHOLES SHALL HAVE TAMPER-PROOF LIDS PER SPECIFICATIONS, OR APPROVED EQUAL. CAUTION: NOT ALL TAMPER-PROOF LIDS MEET CITY OF WEST LINN SPECIFICATIONS. THE FRAME AND COVER SHALL BE ONE FOOT (12') ABOVE FINISH GRADE.

12. IN AREAS USED BY VEHICLES (PAVED OR UNPAVED STREETS) THE MANHOLE RIM ELEVATION SHALL MATCH THE FINISHED GRADES. IN OTHER AREAS THE HEIGHT OF THE MANHOLE RIM WILL NORMALLY BE ONE FOOT (12") ABOVE FINISHED GRADE, HIGH-WATER MARK, OR ABOVE TOP OF FUTURE FILL AREAS.

13. THE CONTRACTOR SHALL AT ALL TIMES PROVIDE AND MAINTAIN AMPLE MEANS AND DEVICES TO REMOVE AND DISPOSE OF ALL WATER ENTERING THE TRENCH EXCAVATION DURING THE PROCESS OF LAYING THE PIPE. WATER AND DEBRIS SHALL NOT ENTER INTO THE CITY'S SEWER SYSTEM. WATER AND DEBRIS SHALL BE DISPOSED OF IN AN APPROVED MANNER.

14. VERTICAL DATUM: ELEVATIONS ARE DERIVED BY TRIMBLE VRS NOW NETWORK, AND CHECKED AGAINST NGS BENCHMARK NO. QE1501, LOCATED ALONG HWY 99E AND THE JUNCTION OF INTERSTATE HWY 205 ELEVATION = 81.25 FEET (NAVD 88).

15. THE CONTRACTOR SHALL AT ALL TIMES ABIDE BY APPLICABLE SAFETY RULES OF O.S.H.A. AND IN PARTICULAR, THOSE PERTAINING TO ADEQUATE SHORING AND TRENCH PROTECTION.

16. THE CONTRACTOR SHALL KEEP RECORDS OF ALL CONSTRUCTION THAT DIFFERS FROM THE APPROVED PLANS AND SHALL MAINTAIN "RECORD DRAWINGS" DURING THE CONSTRUCTION PERIOD. "RECORD DRAWINGS" SHALL BE SUBMITTED TO THE ENGINEER AT THE END OF THE PROJECT.

17. CONTRACTOR SHALL PROTECT SHALLOW LATERALS DURING INSTALLATION OF DRY UTILITIES.

18. THE MINIMUM INSIDE DIAMETER OF A SEWER SERVICE LATERAL SHALL BE FOUR (4) INCHES AND SHALL BE EQUAL TO OR GREATER THAN THE BUILDING SEWER DIAMETER. SERVICE LATERALS SHALL BE BUILT TO THE SAME CONSTRUCTION STANDARDS AND OF THE SAME MATERIALS AS THE SEWER MAINLINE.

19. PIPE SLOPES LISTED ARE BASED ON HORIZONTAL LENGTHS FROM CENTER OF STRUCTURE (E.G. MANHOLE) TO CENTER OF STRUCTURE (E.G. MANHOLE). INVERT ELEVATIONS (IES) LISTED AT STRUCTURES ARE BASED ON THE "THEORETICAL" IE AT THE CENTER OF THE STRUCTURE. FIELD STAKING IS BASED ON THESE PIPE SLOPES AND INVERT ELEVATIONS. FOR PIPES WITH STEEP SLOPES AND/OR SHORT PIPE RUNS, THE CONTRACTOR NEEDS TO MAKE ADJUSTMENTS FOR THE ACTUAL SLOPE FROM EDGE OF STRUCTURE TO EDGE OF STRUCTURE AND/OR MAKE SURE PRE-CAST STRUCTURES (E.G. MANHOLE BASE) ACCOMMODATES THE ACTUAL IE AT THE EDGE OF THE STRUCTURE.

20. SEWER LINES SHALL BE LAID IN A STRAIGHT ALIGNMENT AND A UNIFORM GRADE BETWEEN MANHOLES AND CLEANOUTS. SEWER LINES SHALL BE INSTALLED SO THAT THE PIPE BELL IS POSITIONED AT THE UPSTREAM END OF THE SEWER LINE AND THE PIPE SPIGOT IS POSITIONED AT THE DOWNSTREAM END OF THE SEWER LINE.

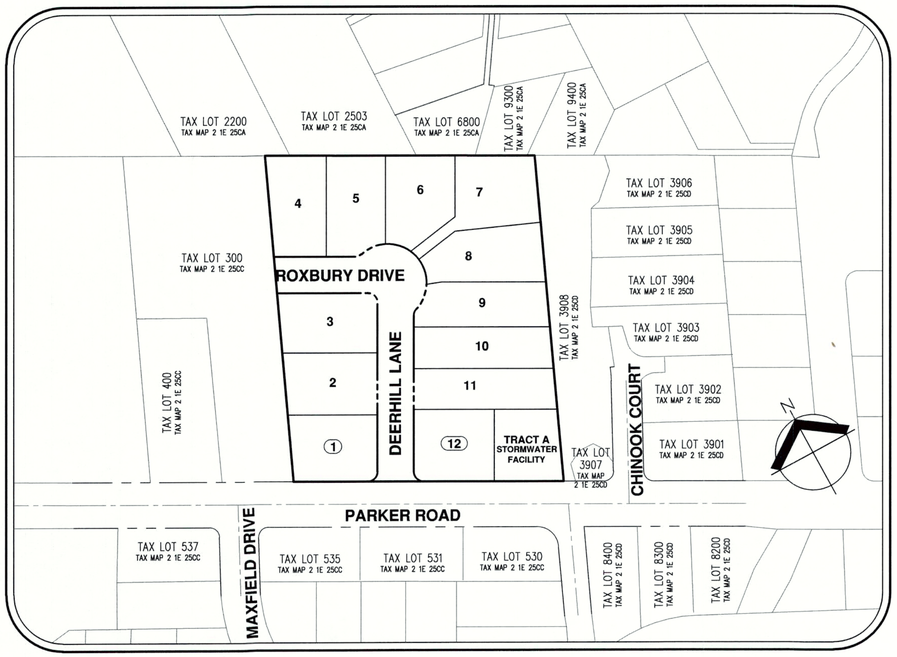

SITE MAP

SCALE: 1" = 100'

SHEET INDEX

C300 SANITARY SEWER PLANS COVER SHEET

C301 SANITARY SEWER PLAN AND PROFILE (SAN 9E-4.1)

C302 SANITARY SEWER PLAN AND PROFILE (SAN 9E-4.1.3)

C303 SANITARY SEWER DETAILS

AKS ENGINEERING & FORESTRY, LLC
12965 SW HERMAN RD, STE 100
TUALATIN, OR 97062
P: 503.563.6151
F: 503.563.6152
aks-eng.com

AKS

ENGINEERING · SURVEYING · NATURAL RESOURCES
FORESTRY · PLANNING · LANDSCAPE ARCHITECTURE

KNOLLCREST SUBDIVISION

WEST LINN OREGON

TAX LOTS 100 & 200 CLACKAMAS COUNTY TAX MAP 2 1E 25CC

SANITARY SEWER PLANS COVER SHEET

DESIGNED BY:	CLR
DRAWN BY:	NSL/AMF
CHECKED BY:	RSW
SCALE:	AS NOTED

DATE: 07/30/2018

REGISTERED PROFESSIONAL ENGINEER 58542PE OREGON JULY 9, 2013 MONTGOMERY B. HURLEY

RENEWAL DATE: 6/30/19

REVISIONS

JOB NUMBER 5132

SHEET C300

AKS DRAWING FILE: 5132 C000 COVER.DWG | LAYOUT: C300

EASEMENT LEGEND

PUE: PUBLIC UTILITY EASEMENT
SDE: PUBLIC STORM DRAINAGE EASEMENT
SSE: PUBLIC SANITARY SEWER EASEMENT

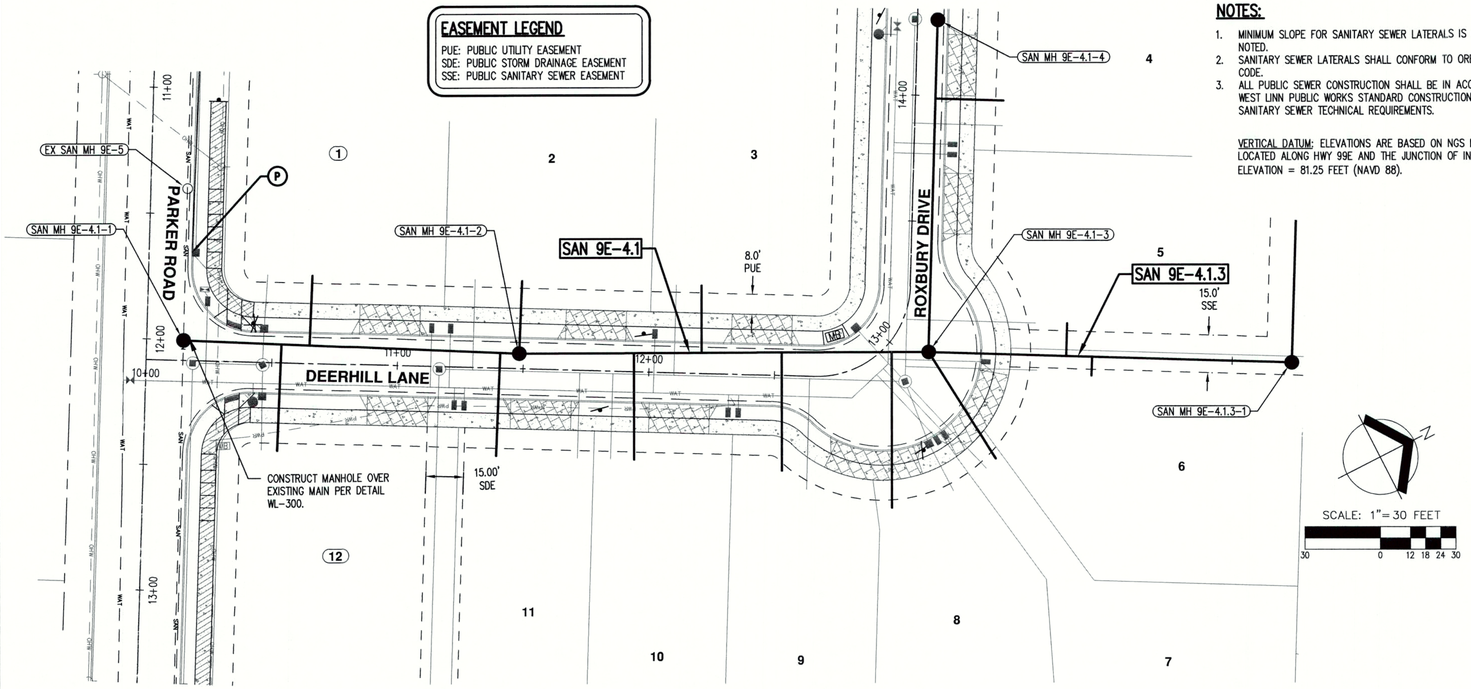

NOTES:

1. MINIMUM SLOPE FOR SANITARY SEWER LATERALS IS 0.02 UNLESS OTHERWISE NOTED.
2. SANITARY SEWER LATERALS SHALL CONFORM TO OREGON PLUMBING SPECIALTY CODE.
3. ALL PUBLIC SEWER CONSTRUCTION SHALL BE IN ACCORDANCE WITH THE CITY OF WEST LINN PUBLIC WORKS STANDARD CONSTRUCTION SPECIFICATIONS, DIVISION 3, SANITARY SEWER TECHNICAL REQUIREMENTS.

VERTICAL DATUM: ELEVATIONS ARE BASED ON NGS BENCHMARK NO. QE1501, LOCATED ALONG HWY 99E AND THE JUNCTION OF INTERSTATE HWY 205 ELEVATION = 81.25 FEET (NAVD 88).

SANITARY SEWER LATERAL TABLE

NAME	ALIGNMENT	STATION	SIZE	LENGTH	SLOPE	MATERIAL	IE @ END	COVER AT END
1	SAN 9E-4.1	0+50.21	4"	27.75'	2.00%	PVC ASTM D-3034 SDR 35	532.67	5.4
2	SAN 9E-4.1	1+34.97	4"	28.87'	13.00%	PVC ASTM D-3034 SDR 35	542.48	6.4
3	SAN 9E-4.1	2+06.29	4"	26.77'	25.00%	PVC ASTM D-3034 SDR 35	553.61	6.1
4	SAN 9E-4.1	3+97.24	4"	27.00'	20.00%	PVC ASTM D-3034 SDR 35	567.93	6.5
8	SAN 9E-4.1	2+81.75	4"	61.97'	8.00%	PVC ASTM D-3034 SDR 35	560.56	6.0
9	SAN 9E-4.1	2+38.13	4"	47.13'	9.00%	PVC ASTM D-3034 SDR 35	554.82	9.9
10	SAN 9E-4.1	1+79.31	4"	42.43'	11.00%	PVC ASTM D-3034 SDR 35	548.49	8.2
11	SAN 9E-4.1	1+26.27	4"	41.12'	10.00%	PVC ASTM D-3034 SDR 35	541.92	6.8
12	SAN 9E-4.1	-0+43.05	4"	42.42'	2.00%	PVC ASTM D-3034 SDR 35	532.12	5.0

PUBLIC STORMWATER DRAINAGE KEYED NOTES

(P) POTHOLE
CONTRACTOR SHALL POTHOLE AND VERIFY EXISTING SANITARY SEWER LOCATION AND DEPTH. COORDINATE WITH PROJECT ENGINEER IF CONFLICTS ARE APPARENT, PRIOR TO ORDERING MATERIALS.

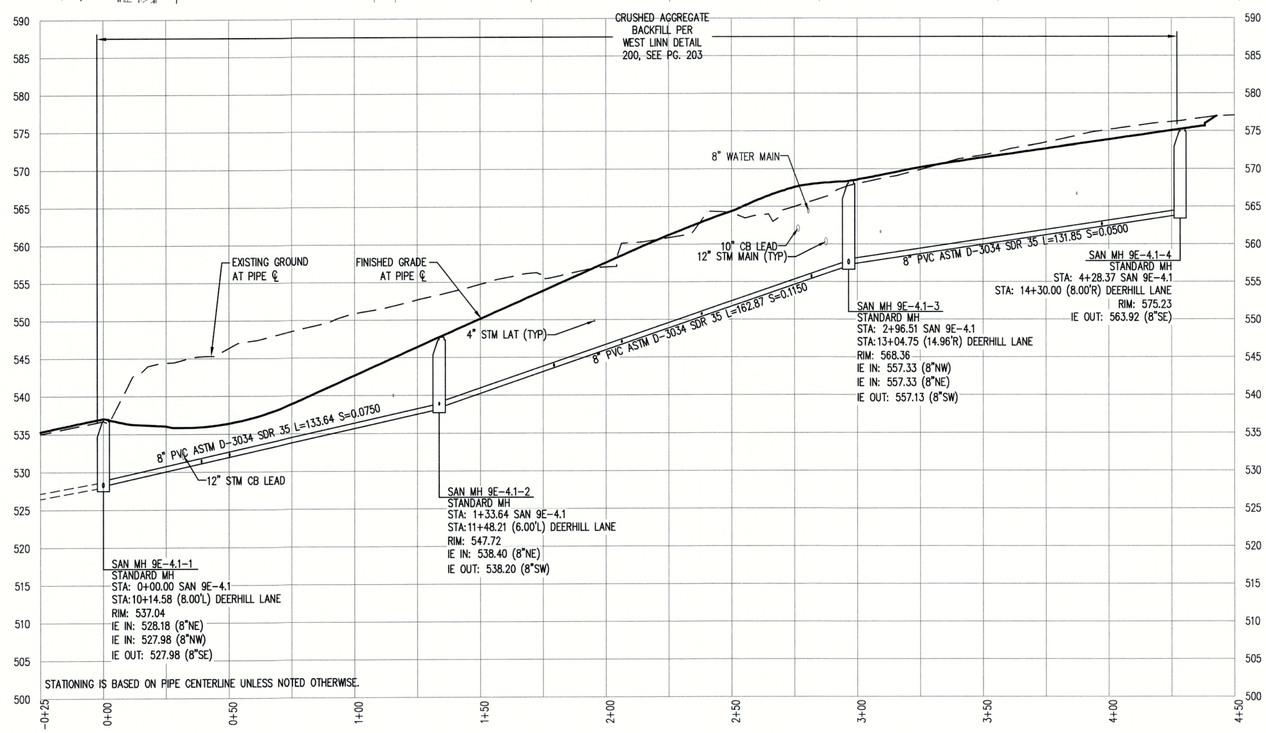

SAN 9E-4.1
HOR: 1"= 30'
VERT: 1"= 10'

AKS ENGINEERING & FORESTRY, LLC
12965 SW HERMAN RD STE 100
TUALATIN, OR 97062
P: 503.563.6151
F: 503.563.6152
aks-eng.com

ENGINEERING · SURVEYING · NATURAL RESOURCES
FORESTRY · PLANNING · LANDSCAPE ARCHITECTURE

KNOLLCREST SUBDIVISION

WEST LINN OREGON
TAX LOTS 100 & 200
CLACKAMAS COUNTY TAX MAP 2 1E 25CC

SANITARY SEWER PLAN AND PROFILE (SAN 9E-4.1)

DESIGNED BY: CLR
DRAWN BY: NSL/AMF
CHECKED BY: RSW
SCALE: AS NOTED
DATE: 07/30/2018

REGISTERED PROFESSIONAL ENGINEER 58548PE OREGON MAY 9, 2002 MONTGOMERY B. HURLEY
RENEWAL DATE: 6/30/19

REVISIONS

JOB NUMBER
5132

SHEET
C301

AKS DRAWING FILE: 5132 C300 SAN.DWG | LAYOUT: SAN 301

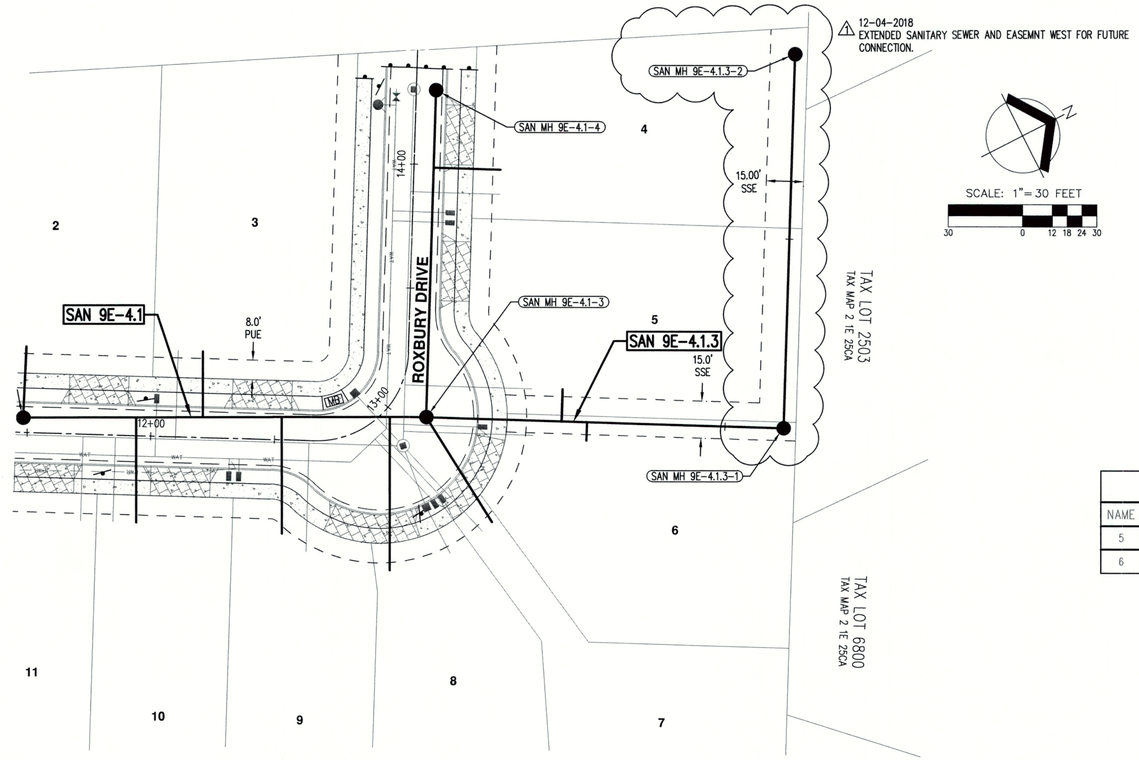

NOTES:

1. MINIMUM SLOPE FOR SANITARY SEWER LATERALS IS 0.02 UNLESS OTHERWISE NOTED.
2. SANITARY SEWER LATERALS SHALL CONFORM TO OREGON PLUMBING SPECIALTY CODE.
3. ALL PUBLIC SEWER CONSTRUCTION SHALL BE IN ACCORDANCE WITH THE CITY OF WEST LINN PUBLIC WORKS STANDARD CONSTRUCTION SPECIFICATIONS, DIVISION 3, SANITARY SEWER TECHNICAL REQUIREMENTS.

VERTICAL DATUM: ELEVATIONS ARE BASED ON NGS BENCHMARK NO. QE1501, LOCATED ALONG HWY 99E AND THE JUNCTION OF INTERSTATE HWY 205 ELEVATION = 81.25 FEET (NAVD 88).

EASEMENT LEGEND

PUE: PUBLIC UTILITY EASEMENT
SDE: PUBLIC STORM DRAINAGE EASEMENT
SSE: PUBLIC SANITARY SEWER EASEMENT

SANITARY SEWER LATERAL TABLE

NAME	ALIGNMENT	STATION	SIZE	LENGTH	SLOPE	MATERIAL	IE @ END	COVER AT END
5	SAN 9E-4.1.3	0+83.99	4"	13.00'	26.00%	PVC ASTM D-3034 SDR 35	564.16	6.3
6	SAN 9E-4.1.3	0+94.23	4"	7.50'	32.00%	PVC ASTM D-3034 SDR 35	563.80	6.5

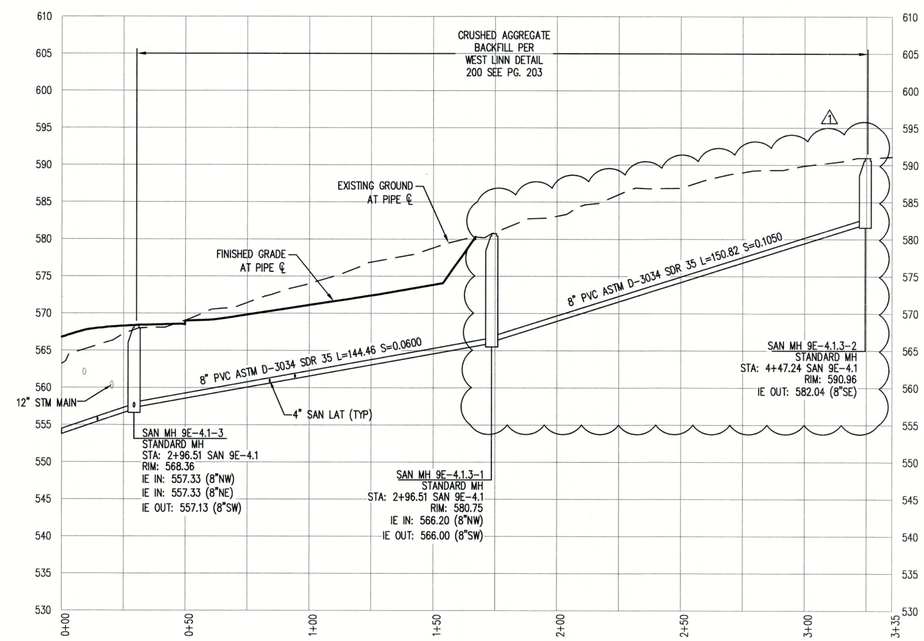

STATIONING IS BASED ON PIPE CENTERLINE UNLESS NOTED OTHERWISE.

SAN 9E-4.1.3
HOR: 1"= 30'
VERT: 1"= 10'

THIS PLAN REVIEW APPROVAL DOES NOT PREVENT THE FIELD INSPECTOR FROM REQUIRING FURTHER CODE CORRECTIONS.

CITY OF West Linn ENGINEERING APPROVED
DATE 1/10/19 BY EL

AKS ENGINEERING & FORESTRY, LLC
12965 SW HERMAN RD STE 100
TUALATIN, OR 97062
P: 503.563.6151
F: 503.563.6152
aks-eng.com

ENGINEERING · SURVEYING · NATURAL RESOURCES
FORESTRY · PLANNING · LANDSCAPE ARCHITECTURE

KNOLLCREST SUBDIVISION

WEST LINN OREGON
TAX LOTS 100 & 200
CLACKAMAS COUNTY TAX MAP 2 1E 25CC

SANITARY SEWER PLAN AND PROFILE (SAN 9E-4.1.3)

DESIGNED BY: CLR
DRAWN BY: NSL/AMF
CHECKED BY: RSW
SCALE: AS NOTED
DATE: 07/30/2018

REGISTERED PROFESSIONAL ENGINEER 58540PE OREGON JULY 9, 2002 MONTGOMERY B. HURLEY
RENEWAL DATE: 6/30/19

REVISIONS:
1 12-04-2018

JOB NUMBER 5132

SHEET C302

AKS DRAWING FILE: 5132 C300 SAN.DWG | LAYOUT: SAN 302

THIS DETAIL DRAWING SHALL NOT BE ALTERED OR CHANGED IN ANY MANNER EXCEPT BY THE CITY ENGINEER. IT IS THE RESPONSIBILITY OF THE USER TO ACQUIRE THE MOST CURRENT VERSION OF THE DETAIL.

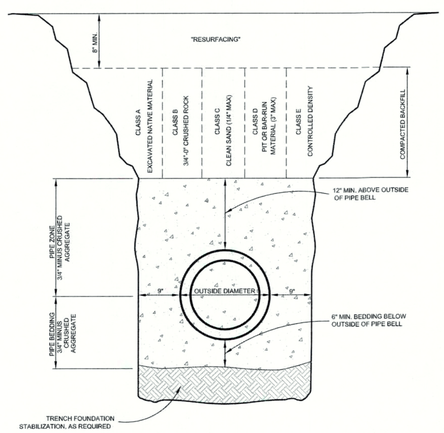

TRENCH BACKFILL BEDDING AND PIPE ZONE

City of West Linn | DATE: 2010 | DRAWING NO. WL-200 | FILE NO.

THIS DETAIL DRAWING SHALL NOT BE ALTERED OR CHANGED IN ANY MANNER EXCEPT BY THE CITY ENGINEER. IT IS THE RESPONSIBILITY OF THE USER TO ACQUIRE THE MOST CURRENT VERSION OF THE DETAIL.

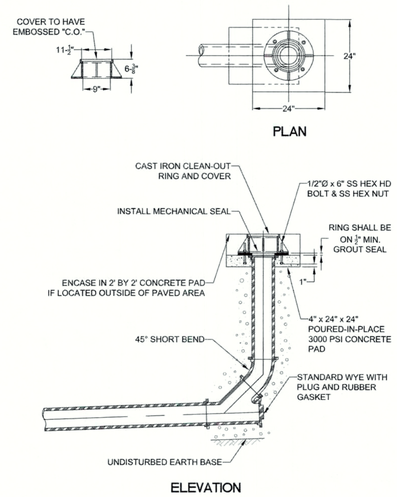

STANDARD CLEAN OUT

City of West Linn | DATE: 2010 | DRAWING NO. WL-206 | FILE NO.

THIS DETAIL DRAWING SHALL NOT BE ALTERED OR CHANGED IN ANY MANNER EXCEPT BY THE CITY ENGINEER. IT IS THE RESPONSIBILITY OF THE USER TO ACQUIRE THE MOST CURRENT VERSION OF THE DETAIL.

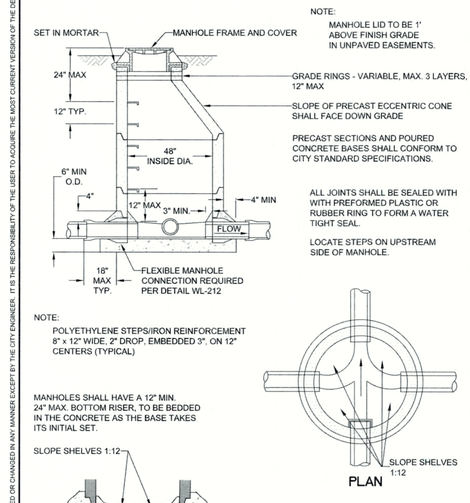

NOTE:
MANHOLE LID TO BE 1' ABOVE FINISH GRADE IN UNPAVED EASEMENTS.

PRECAST SECTIONS AND POURED CONCRETE BASES SHALL CONFORM TO CITY STANDARD SPECIFICATIONS.

ALL JOINTS SHALL BE SEALED WITH WITH PREFORMED PLASTIC OR RUBBER RING TO FORM A WATER TIGHT SEAL.

LOCATE STEPS ON UPSTREAM SIDE OF MANHOLE.

NOTE:
POLYETHYLENE STEPS/IRON REINFORCEMENT 8" x 12" WIDE, 2" DROP, EMBEDDED 3", ON 12" CENTERS (TYPICAL)

MANHOLES SHALL HAVE A 12" MIN. 24" MAX. BOTTOM RISER, TO BE BEDDED IN THE CONCRETE AS THE BASE TAKES ITS INITIAL SET.

NOTE:
CHANNELS MUST BE ABLE TO PASS A 7"X30" CYLINDER INTO PIPES. SHELF SHALL NOT BE BELOW THE TOP OF THE PIPE.

STANDARD MANHOLE FOR LESS THAN 36" PIPE

City of West Linn | DATE: 2010 | DRAWING NO. WL-207 | FILE NO.

THIS DETAIL DRAWING SHALL NOT BE ALTERED OR CHANGED IN ANY MANNER EXCEPT BY THE CITY ENGINEER. IT IS THE RESPONSIBILITY OF THE USER TO ACQUIRE THE MOST CURRENT VERSION OF THE DETAIL.

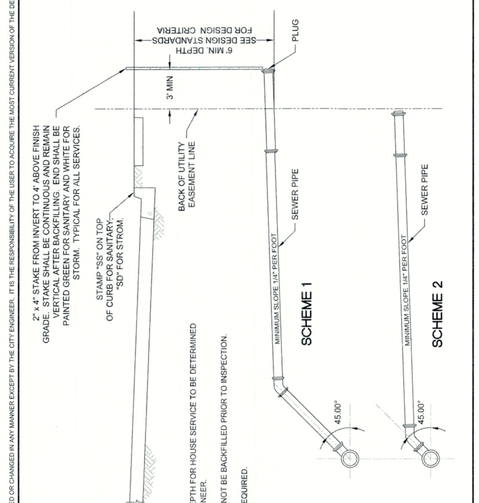

NOTE:
1. SCHEME AND DEPTH FOR HOUSE SERVICE TO BE DETERMINED BY DESIGN ENGINEER.
2. SERVICE SHALL NOT BE BACKFILLED PRIOR TO INSPECTION.
3. TRACER WIRE REQUIRED.

SERVICE BRANCH

City of West Linn | DATE: 2010 | DRAWING NO. WL-218 | FILE NO.

THIS DETAIL DRAWING SHALL NOT BE ALTERED OR CHANGED IN ANY MANNER EXCEPT BY THE CITY ENGINEER. IT IS THE RESPONSIBILITY OF THE USER TO ACQUIRE THE MOST CURRENT VERSION OF THE DETAIL.

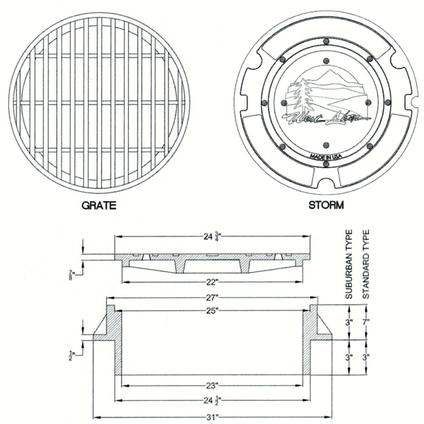

NOTE:
1. USE SUBURBAN TYPE ONLY IN NON-TRAFFIC AREAS, AND ONLY WITH APPROVAL BY THE CITY.
2. COVER AND FRAME SHALL BE GRAY CAST IRON ASTM A-48 CLASS 30.
3. COVER AND FRAME TO BE MACHINED TO A TRUE BEARING ALL AROUND.
4. NOTCH LID FOR LIFTING HOOK.
5. OPEN GRATES REQUIRE APPROVAL BY CITY, AND MUST BE BICYCLE SAFE IF USED IN TRAFFIC AREAS.

MANHOLE FRAME AND COVER

City of West Linn | DATE: 2010 | DRAWING NO. WL-605 | FILE NO.

THIS DETAIL DRAWING SHALL NOT BE ALTERED OR CHANGED IN ANY MANNER EXCEPT BY THE CITY ENGINEER. IT IS THE RESPONSIBILITY OF THE USER TO ACQUIRE THE MOST CURRENT VERSION OF THE DETAIL.

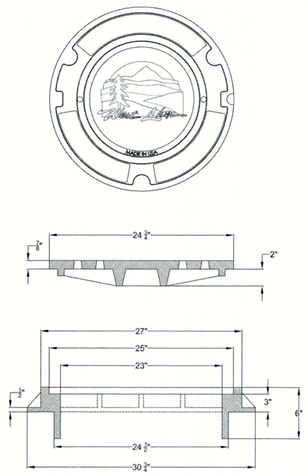

NOTE:
1. COVER AND FRAME TO BE MACHINED FOR TRUE BEARING
2. MATERIAL SHALL BE GRAY CAST IRON A.S.T.M. A-48 CLASS 30
3. 2 HOLE LID FOR SANITARY SEWER
4. 16 HOLE LID FOR STORM SEWER

SUBURBAN MANHOLE FRAME AND COVER 3" DEPTH

City of West Linn | DATE: 2010 | DRAWING NO. WL-300 | FILE NO.

AKS ENGINEERING & FORESTRY, LLC
12965 SW HERMAN RD STE 100
TUALATIN, OR 97062
P: 503.563.6151
F: 503.563.6152
aks-eng.com

ENGINEERING · SURVEYING · NATURAL RESOURCES
FORESTRY · PLANNING · LANDSCAPE ARCHITECTURE

KNOLLCREST SUBDIVISION

WEST LINN — OREGON
TAX LOTS 100 & 200 — CLACKAMAS COUNTY TAX MAP 2 1E 25CC

SANITARY SEWER DETAILS

DESIGNED BY:	CLR
DRAWN BY:	NSL/AMF
CHECKED BY:	RSW
SCALE:	AS NOTED
DATE: 07/30/2018	

REGISTERED PROFESSIONAL ENGINEER 58542PE OREGON JULY 3, 2002 MONTGOMERY B. HURLEY
RENEWAL DATE: 6/30/19

REVISIONS

JOB NUMBER 5132

SHEET C303

AKS DRAWING FILE: 5132 DETAILS.DWG | LAYOUT: C302

KNOLLCREST SUBDIVISION

WATER CONSTRUCTION PLANS

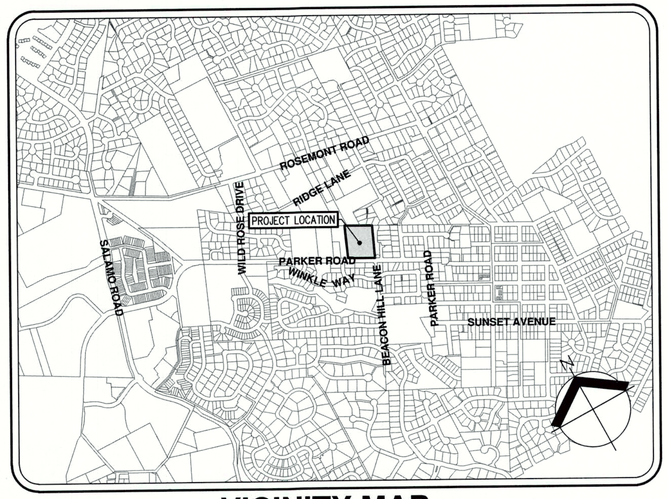

VICINITY MAP

SCALE: 1" = 500'

WATER CONSTRUCTION NOTES

WATER LINE/SERVICES SPECIFICATIONS AND INFORMATION FOR WATER SYSTEMS CONSTRUCTION IN CITY OF WEST LINN WATER AUTHORITY

1. ALL PUBLIC WATER DISTRIBUTION SYSTEMS SHALL BE CONSTRUCTED WITH DUCTILE IRON PIPE. ALL SUCH PIPE SHALL BE CEMENT MORTAR LINED PIPE WITH PUSH-ON OR MECHANICAL TYPE JOINT. WHEN A CORROSIVE POTENTIAL CONDITION IS ENCOUNTERED, ALL DUCTILE IRON PIPE AND FITTINGS WILL BE POLYETHYLENE ENCASED WITH AN 8 MIL TUBING MEETING MANUFACTURER AND AWWA STANDARDS. WHERE AND ACTIVE CATHODIC PROTECTION SYSTEM IS ENCOUNTERED AS A RESULT OF OTHER UTILITIES, A DEVIATION FROM THE NORMAL PIPE DESIGN/MATERIAL/INSTALLATION PRACTICE MAY BE REQUIRED BY THE CITY ENGINEER.
2. THE STANDARD MINIMUM COVER OVER BURIED WATER MAINS WITHIN THE STREET RIGHT-OF-WAY SHALL BE 36 INCHES FROM FINISH GRADE.
3. HYDRANT INSTALLATION SHALL CONFORM TO CITY OF WEST LINN STANDARD DRAWING WL-401. FULL DEPTH HYDRANTS WILL BE REQUIRED IN ALL INSTALLATIONS. INSTALLATION OF HYDRANT EXTENSIONS WILL NOT BE ALLOWED, UNLESS APPROVED BY THE CITY ENGINEER.
4. DOMESTIC SERVICE LINES 1 IN. THROUGH 2 IN. SHALL NORMALLY EXTEND FROM THE MAIN TO BEHIND THE CURB, WITH A METER CURB STOP AND METER BOX LOCATED AT THE TERMINATION OF THE SERVICE CONNECTION (CITY OF WEST LINN STANDARD DRAWING WL-402 AND WL-403). METER TO BE PROVIDED AND INSTALLED BY THE CITY. METER BOXES ARE TO BE PROVIDED BY THE DEVELOPER.
5. FIELD LOK GASKETS SHALL BE INSTALLED AT EVERY JOINT.
6. WHEREVER IT IS NECESSARY FOR SEWER AND WATER LINES TO CROSS EACH OTHER, THE CROSSING SHOULD BE AT AN ANGLE OF APPROXIMATELY 90° AND THE SEWER SHALL EITHER BE LOCATED 18 INCHES OR MORE BELOW THE WATER LINE OR BE CONSTRUCTED OF CAST IRON WATER PIPE WITH WATERTIGHT JOINTS FOR A DISTANCE OF 9 FEET ON BOTH SIDES OF THE WATER MEASURED EDGE TO EDGE. THE MINIMUM SPACING BETWEEN WATER MAINS AND STORM DRAINS, GAS LINES, AND OTHER UNDERGROUND UTILITIES, EXCEPT SANITARY SEWERS, SHALL BE 3 FEET HORIZONTALLY WHEN THE STANDARD UTILITY LOCATION CANNOT BE MAINTAINED. CROSSING'S PER ORS. 333.961.0050.

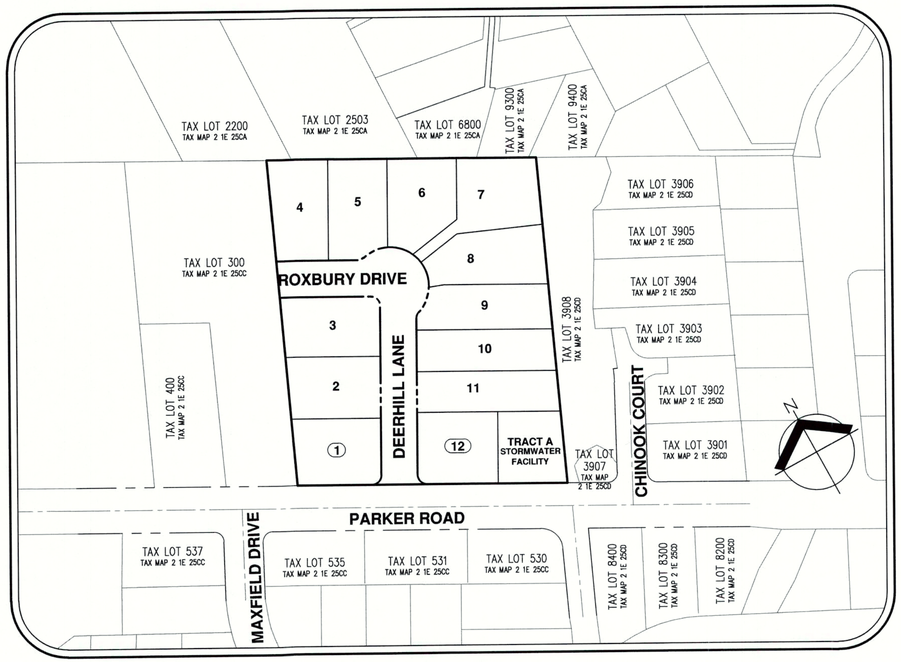

SITE MAP

SCALE: 1" = 100'

SHEET INDEX

C400 WATER PLANS COVER SHEET

C401 WATER PLAN AND PROFILES

C402 WATER DETAILS

AKS ENGINEERING & FORESTRY, LLC
12965 SW HERMAN RD STE 100
TUALATIN, OR 97062
P: 503.563.6151
F: 503.563.6152
aks-eng.com

ENGINEERING · SURVEYING · NATURAL RESOURCES
FORESTRY · PLANNING · LANDSCAPE ARCHITECTURE

KNOLLCREST SUBDIVISION

WEST LINN — OREGON

TAX LOTS 100 & 200 — CLACKAMAS COUNTY TAX MAP 2 1E 25CC

WATER PLANS COVER SHEET

DESIGNED BY:	CLR
DRAWN BY:	NSL/AMF
CHECKED BY:	RSW
SCALE:	AS NOTED

DATE: 07/30/2018

REGISTERED PROFESSIONAL ENGINEER — 58548PE — OREGON — JULY 9, 2013 — MONTGOMERY B. HURLEY

RENEWAL DATE: 6/30/19

REVISIONS

JOB NUMBER 5132

SHEET C400

AKS DRAWING FILE: 5132 C000 COVER.DWG | LAYOUT: C400

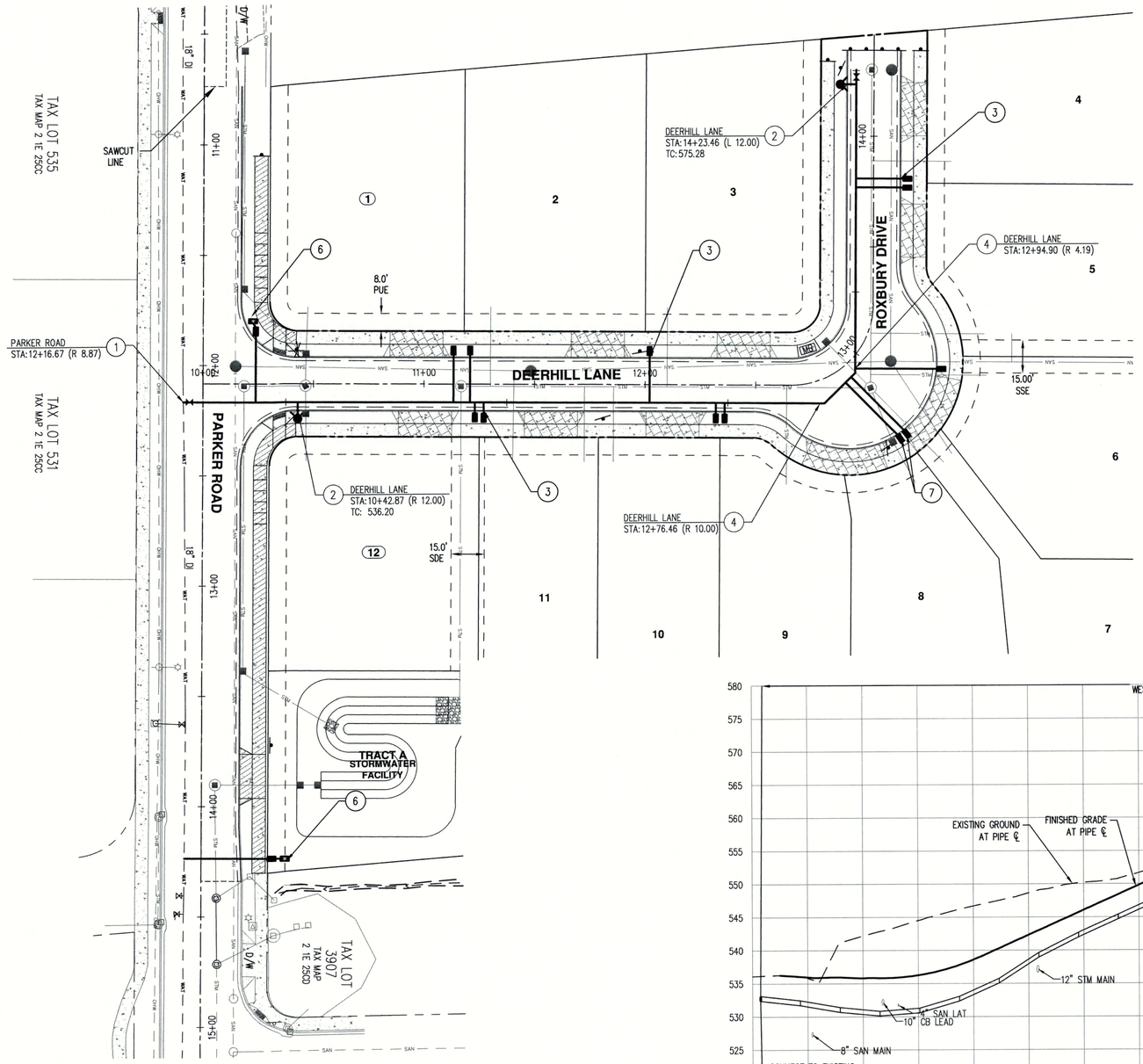

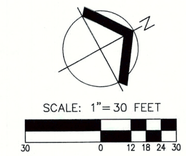

NOTES:

1. ALL TRENCHING AND BACKFILL WITHIN DEERHILL LANE AND ROXBURY DRIVE SHALL BE PER DETAIL WL-200, SEE SHEET C402.

WATER CONSTRUCTION NOTES: (#)

1. HOT TAP EXISTING WATER MAIN USING STAINLESS STEEL TAPPING SADDLE AND TAPPING GATE VALVE. TAP SHALL BE PERFORMED BY OREGON STATE DEPARTMENT HEALTH LICENSED WATER TAPPING CONTRACTOR. ENSURE THAT TAPPING LOCATION IS AT LEAST 3 FEET AWAY FROM JOINT IN EXISTING WATER MAIN. INSTALL THRUST BLOCKING ON THE SOUTH WEST SIDE OF PARKER ROAD TAP LOCATION.
2. INSTALL FIRE HYDRANT ASSEMBLY PER DETAIL WL-401, SEE SHEET C402. CALL OUT FOR HORIZONTAL LOCATION AND ELEVATION IS TO TOP BACK OF CURB. FIRE HYDRANT LOCATION (RELATIVE TO CURB) AND FLANGE HEIGHT SHALL BE DETERMINED BY THE FIRE HYDRANT DETAIL, SEE SHEET C402.
3. INSTALL 1" WATER SERVICE PER DETAIL WL-402, SEE SHEET C402 (TYPICAL).
4. INSTALL 8"x8" MJ 45° BEND. THRUST BLOCKING SEE DETAIL ON SHEET C402.
5. NOT USED.
6. INSTALL 1" WATER SERVICE FOR IRRIGATION PER DETAIL WL-402, SHEET C402.
7. TRAFFIC RATED LID REQUIRED

EASEMENT LEGEND

PUE: PUBLIC UTILITY EASEMENT
SDE: PUBLIC STORM DRAINAGE EASEMENT
SSE: PUBLIC SANITARY SEWER EASEMENT

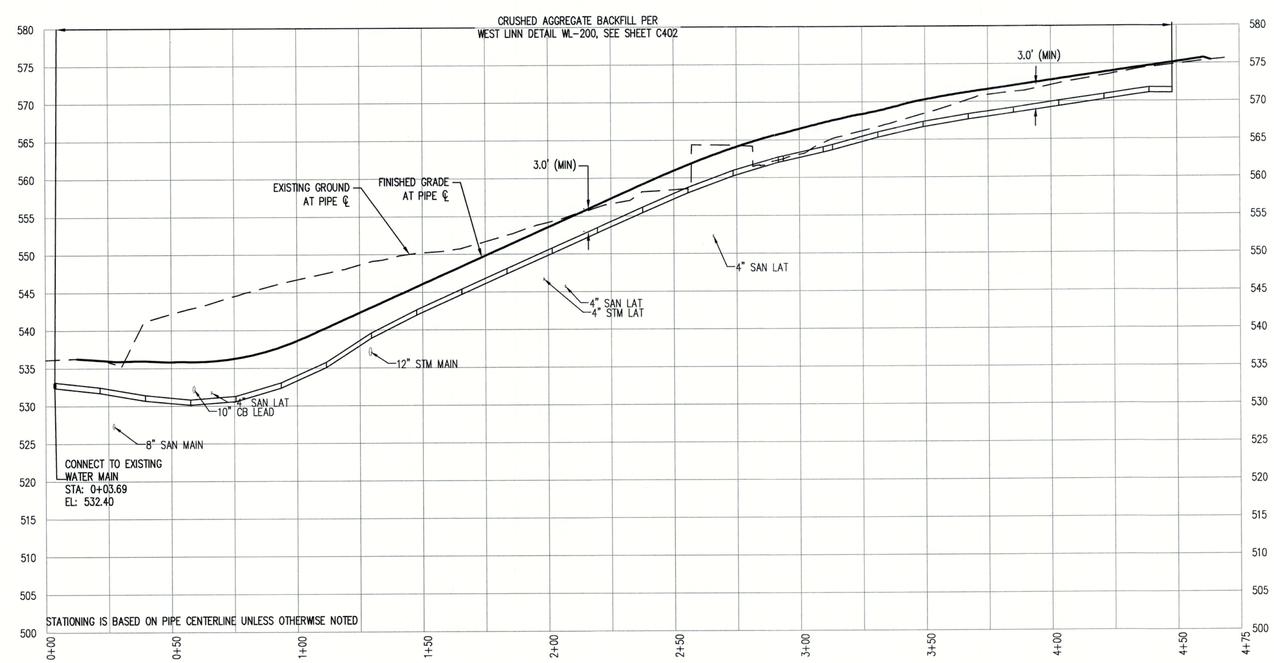

DEERHILL LANE WAT
HOR: 1"= 30'
VERT: 1"= 10'

AKS ENGINEERING & FORESTRY, LLC
12965 SW HERMAN RD STE 100
TUALATIN, OR 97062
P: 503.563.6151
F: 503.563.6152
aks-eng.com

ENGINEERING · SURVEYING · NATURAL RESOURCES
FORESTRY · PLANNING · LANDSCAPE ARCHITECTURE

KNOLLCREST SUBDIVISION

WEST LINN OREGON
TAX LOTS 100 & 200
CLACKAMAS COUNTY TAX MAP 2 1E 25CC

WATER PLAN AND PROFILES

DESIGNED BY:	CLR
DRAWN BY:	NSL/AMF
CHECKED BY:	RSW
SCALE:	AS NOTED
DATE: 07/30/2018	

REGISTERED PROFESSIONAL ENGINEER 58540PE OREGON MAY 9, 2012 MONTGOMERY B. HURLEY
RENEWAL DATE: 6/30/19

REVISIONS

JOB NUMBER
5132

SHEET
C401

AKS DRAWING FILE: 5132 C400 WATER.DWG | LAYOUT: C401

THIS DETAIL DRAWING SHALL NOT BE ALTERED OR CHANGED IN ANY MANNER EXCEPT BY THE CITY ENGINEER. IT IS THE RESPONSIBILITY OF THE USER TO ACQUIRE THE MOST CURRENT VERSION OF THE DETAIL.

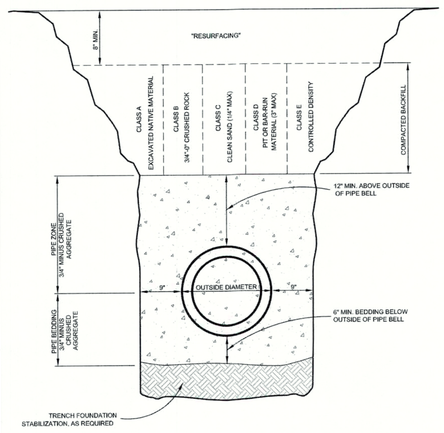

TRENCH BACKFILL BEDDING AND PIPE ZONE

City of West Linn | DATE: 2010 | DRAWING NO. WL-200 | FILE NO.

THIS DETAIL DRAWING SHALL NOT BE ALTERED OR CHANGED IN ANY MANNER EXCEPT BY THE CITY ENGINEER. IT IS THE RESPONSIBILITY OF THE USER TO ACQUIRE THE MOST CURRENT VERSION OF THE DETAIL.

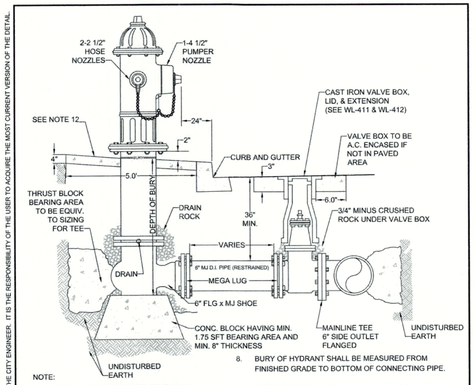

NOTE:

1. HYDRANT TO BE MUELLER CENTURION MDL A-423 ONLY WITH 1 1/2" OPER. NUTS OR CLOW MEDALLION F-2545.
2. HYDRANT COLOR TO BE MILLER EQUIP. ENAMEL 0 E 40 (SAFETY YELLOW).
3. JOINTS TO BE RESTRAINED BY 3/4" DIA. GALVANIZED STEEL RODS AND THRUST BLOCKS OR MEGALUGS AND THRUST BLOCKS.
4. ALL FITTINGS IN CONTACT W/CONCRETE SHALL BE WRAPPED IN PLASTIC. HYDRANT DRAIN HOLES TO REMAIN OPEN TO DRAIN ROCK AND OPERATIONAL.
5. MIN. 4 CFT OF 1 1/2" - 3/4" CLEAN DRAIN ROCK SHALL BE PLACED AROUND SHOE UP TO A MIN. OF 6" ABOVE DRAIN OUTLETS.
6. WHERE PLANTER STRIP EXISTS, HYDRANT SHALL BE PLACED SO THE FRONT PORT IS A MINIMUM OF 24" BEHIND THE FACE OF THE CURB.
7. WHERE INTEGRAL S/W & CURB EXISTS, HYDRANT SHALL BE PLACED AT BACK OF THE SIDEWALK, OR AS DIRECTED BY ENGINEER.
8. BURY OF HYDRANT SHALL BE MEASURED FROM FINISHED GRADE TO BOTTOM OF CONNECTING PIPE.
9. THRUST BLOCK AT FIRE HYDRANT TEE SHALL BE EQUIVALENT TO TEE PIPE SIZING (SEE WL-406).
10. HYDRANT VALVE SHALL BE MUELLER RESILIENT WEDGE GATE VALVE #A-2360-16 ONLY.
11. NO EXTENSIONS ALLOWED
12. HYDRANT SHALL HAVE A 5' x5' x 4" THICK CONCRETE APRON. THERE SHALL BE 2" OF CLEARANCE BETWEEN THE TOP OF THE APRON AND THE BOTTOM OF THE FLANGED BOLT PATTERN OF THE HYDRANT.
13. CONCRETE SHALL BE COMMERCIALLY MIXED WITH A BREAKING STRENGTH OF NOT LESS THAN 3000 PSI.

STANDARD FIRE HYDRANT ASSEMBLY

City of West Linn | DATE: 2010 | DRAWING NO. WL-401 | FILE NO.

THIS DETAIL DRAWING SHALL NOT BE ALTERED OR CHANGED IN ANY MANNER EXCEPT BY THE CITY ENGINEER. IT IS THE RESPONSIBILITY OF THE USER TO ACQUIRE THE MOST CURRENT VERSION OF THE DETAIL.

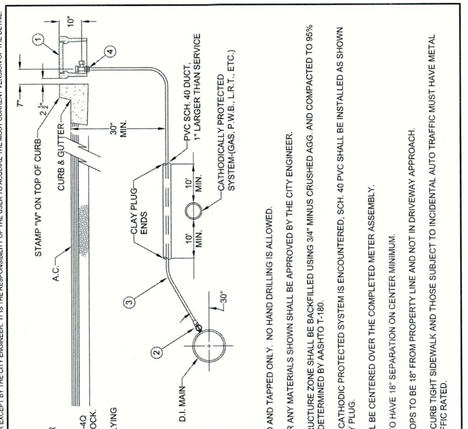

MATERIAL:

1. BROOKS METER BOX, BODY NO. 37, LID AND COVER NO.37-S.
2. MUELLER CORP. STOP NO. H-15008 OR FORD F1000-4Q CORP. STOP WITH OPERATING NUT AT 3 OR 9 O'CLOCK.
3. 1" SOFT TEMPER, TYPE "K" COPPER TUBING COMPLYING WITH ASTM B-88.
4. MUELLER ANGLE METER STOP NO. H-14258 (FORD NO. KV43-444-WQ).

NOTE:

1. MACHINE DRILLED AND TAPPED ONLY. NO HAND DRILLING IS ALLOWED.
2. SUBSTITUTES FOR ANY MATERIALS SHOWN SHALL BE APPROVED BY THE CITY ENGINEER.
3. ALL PIPE AND STRUCTURE ZONE SHALL BE BACKFILLED USING 3/4" MINUS CRUSHED AGG. AND COMPACTED TO 95% MAX DENSITY AS DETERMINED BY AASHTO T-180.
4. WHEN AN ACTIVE CATHODIC PROTECTED SYSTEM IS ENCOUNTERED, SCH. 40 PVC SHALL BE INSTALLED AS SHOWN ABOVE WITH CLAY PLUG.
5. METER BOX SHALL BE CENTERED OVER THE COMPLETED METER ASSEMBLY.
6. TAPS INTO MAIN TO HAVE 18" SEPARATION ON CENTER MINIMUM.
7. ANGLE METER STOPS TO BE 18" FROM PROPERTY LINE AND NOT IN DRIVEWAY APPROACH.
8. METER BOXES IN CURB TGHT SIDEWALK AND THOSE SUBJECT TO INCIDENTAL AUTO TRAFFIC MUST HAVE METAL LIDS AND BE TRAFFIC RATED.

STANDARD 1" WATER SERVICE

City of West Linn | DATE: 2010 | DRAWING NO. WL-402 | FILE NO.

THIS DETAIL DRAWING SHALL NOT BE ALTERED OR CHANGED IN ANY MANNER EXCEPT BY THE CITY ENGINEER. IT IS THE RESPONSIBILITY OF THE USER TO ACQUIRE THE MOST CURRENT VERSION OF THE DETAIL.

BLOW-OFF SIZES REQUIRED	
MAIN SIZE	BLOW-OFF SIZE
4" TO 6"	2"
8" TO 12"	4"
14" TO 18"	6"
20" & UP	PER ENGR.

NOTE:

1. BACKFILL WITH SELECT CRUSHED AGGREGATE A MINIMUM OF 6" ON ALL SIDES. COMPACTED TO 95% OF MAX DENSITY AS DETERMINED BY AASHTO T180.
2. ON TEMPORARY BLOW-OFFS ONLY, AN MJ CAP TAPPED 4" OR 6" MAY BE SUBSTITUTED FOR REDUCER.
3. TEMPORARY BLOW-OFF IS ONE REMOVED AT THE END OF PROJECT CONSTRUCTION. A PERMANENT BLOW-OFF REMAINS ON THE PROJECT AFTER ACCEPTANCE.
4. PLACE BLOW-OFF STANDPIPE 3 FT. INSIDE R.O.W. LINE AT END OF STREET (2 FT FROM BARRICADE).

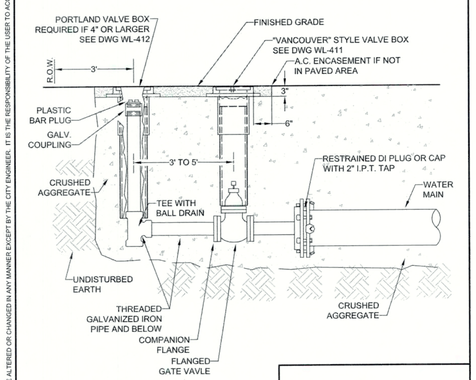

PERMANENT OR TEMPORARY 4" AND 6" BLOW-OFF

City of West Linn | DATE: 2010 | DRAWING NO. WL-404B | FILE NO.

THIS DETAIL DRAWING SHALL NOT BE ALTERED OR CHANGED IN ANY MANNER EXCEPT BY THE CITY ENGINEER. IT IS THE RESPONSIBILITY OF THE USER TO ACQUIRE THE MOST CURRENT VERSION OF THE DETAIL.

FITTING SIZE (inches)	TEE, WYE, & ① HYDRANTS	STRADDLE BLOCK ②	90° BEND ③ PLUGGED CROSS TEE PLUGGED-RUNS	45° BEND ④	22 1/2° BEND ④	11 1/2° BEND ④
2	*	*	*	*	*	*
4	1.7	2.1	2.4	1.3	*	*
6	3.7	4.9	5.3	2.9	1.5	*
8	6.7	8.7	9.5	5.1	2.7	1.3
10	10.5	13.6	14.8	8	4.1	2
12	15.1	19.6	21.3	11.6	5.9	2.9
14						
16	26.8	34.8	37.9	20.5	10.4	5.2
18	33.9	44	47.9	25.9	12.8	6.7
LARGER	* **	* **	* **	* **	* **	* **
BEARING AREA OF THRUST BLOCKS (sq. ft.)						

1. ALL VALUES ARE BASED ON THE FOLLOWING ASSUMPTIONS: AVG. PRESSURE = 100 PSI X 2 (safety factor); 1500 PSF SOIL BEARING CAPACITY; NORMAL DISTRIBUTION DESIGN VELOCITY NOT TO EXCEED 5 F/S.
2. ALL FITTINGS SHALL BE WRAPPED IN 8 MM PLASTIC PRIOR TO PLACEMENT OF CONCRETE.
3. BEARING SURFACE OF THRUST BLOCKING SHALL BE AGAINST UNDISTURBED SOIL
4. ALL CONCRETE MIX SHALL HAVE A MIN. 28 DAY STRENGTH OF 3000 PSI.
5. ALL PIPE ZONES SHALL BE GRAVEL FILLED AND COMPACTED.
6. THRUST BLOCKS FOR PLUGGED CROSS AND PLUGGED TEE SHALL HAVE #4 REBAR LIFTING LOOPS INSTALLED AS SHOWN.
7. VERTICAL THRUST DETAILS-SEE DWG. WL-407.
8. STRADDLE BLOCK DETAILS-SEE DWG. WL-408.

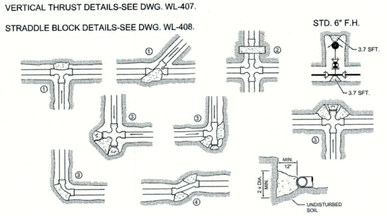

* BLOCK TO UNDISTURBED TRENCH WALLS.

** THRUST BLOCKS FOR PIPES LARGER THAN 18" WILL BE INDIVIDUALLY DESIGNED BY THE ENGINEER.

HORIZONTAL THRUST BLOCKING

City of West Linn | DATE: 2010 | DRAWING NO. WL-406 | FILE NO.

THIS DETAIL DRAWING SHALL NOT BE ALTERED OR CHANGED IN ANY MANNER EXCEPT BY THE CITY ENGINEER. IT IS THE RESPONSIBILITY OF THE USER TO ACQUIRE THE MOST CURRENT VERSION OF THE DETAIL.

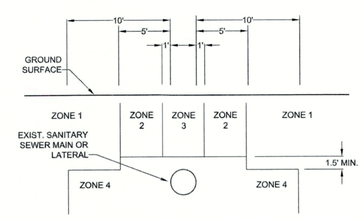

ZONE 1: ONLY CROSSING RESTRICTIONS APPLY
ZONE 2: CASE-BY-CASE DETERMINATION
ZONE 3: PARALLEL WATERLINE PROHIBITED
ZONE 4: PARALLEL WATERLINE PROHIBITED

NOTE:

1. WHERE THE PROPOSED WATERLINE WILL BE INSTALLED PARALLEL TO AN EXISTING GRAVITY SANITARY SEWER MAIN OR LATERAL LINE, THE SEPARATION BETWEEN THE TWO SHALL BE AS INDICATED ABOVE.
2. CROSSINGS:

A. WHEREVER POSSIBLE, THE BOTTOM OF THE WATERLINE SHALL BE 1.5 FEET ABOVE THE TOP OF THE SEWER LINE, AND ONE FULL LENGTH OF WATERLINE SHALL BE CENTERED AT THE CROSSING.

B. WHERE IT IS NOT POSSIBLE FOR THE WATER LINE TO BE 1.5 FEET ABOVE THE SEWER LINE, OR THE WATERLINE PASSES UNDER THE SEWER LINE, THE EXISTING SEWER LINE SHALL BE EXPOSED FOR A DISTANCE OF 10 FEET ON EACH SIDE OF THE CROSSING, AND SHALL BE REPLACED WITH C-900 PVC WITH STRUCTURAL REQUIREMENT OF DR18 OR DR 25 OR CLASS 50 DUCTILE IRON PIPE AS APPROVED BY THE CITY ENGINEER, AND A LENGTH OF WATER PIPE SHALL BE CENTERED AT THE CROSSING, OR AS APPROVED BY THE CITY ENGINEER.

STANDARD SANITARY SEWER CROSSING

City of West Linn | DATE: 2010 | DRAWING NO. WL-409 | FILE NO.

THIS DETAIL DRAWING SHALL NOT BE ALTERED OR CHANGED IN ANY MANNER EXCEPT BY THE CITY ENGINEER. IT IS THE RESPONSIBILITY OF THE USER TO ACQUIRE THE MOST CURRENT VERSION OF THE DETAIL.

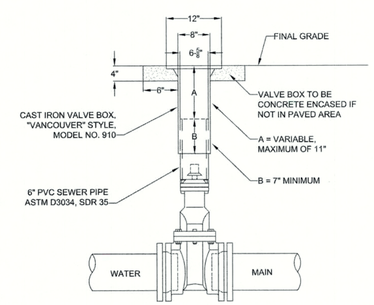

NOTE:

1. VALVE BOXES SHALL BE CENTERED DIRECTLY OVER THE VALVE NUT IN A VERTICAL POSITION.
2. VALVE BOX TOP SHALL BE ADJUSTED TO MEET FINISHED GRADE.
3. PVC SHALL BE ONE CONTINUOUS PIECE-NO BELLS OR COUPLERS.
4. ON VALVES 8" AND LARGER, PVC SHALL BE NOTCHED OVER VALVE PACKING BOLTS SO PVC SITS ON BONNET.

STANDARD VALVE BOX DETAIL

City of West Linn | DATE: 2010 | DRAWING NO. WL-411 | FILE NO.

AKS ENGINEERING & FORESTRY, LLC
12965 SW HERMAN RD STE 100
TUALATIN, OR 97062
P: 503.563.6151
F: 503.563.6152
aks-eng.com

ENGINEERING · SURVEYING · NATURAL RESOURCES
FORESTRY · PLANNING · LANDSCAPE ARCHITECTURE

KNOLLCREST SUBDIVISION

WEST LINN | OREGON
TAX LOTS 100 & 200 | CLACKAMAS COUNTY TAX MAP 2 1E 25CC

WATER DETAILS

DESIGNED BY:	CLR
DRAWN BY:	NSL/AMF
CHECKED BY:	RSW
SCALE:	AS NOTED
DATE: 07/30/2018	

REGISTERED PROFESSIONAL ENGINEER 58540PE OREGON JULY 9, 2002 MONTGOMERY B. KURSEY
RENEWAL DATE: 6/30/19

REVISIONS

JOB NUMBER 5132

SHEET C402

AKS DRAWING FILE: 5132 DETAILS.DWG | LAYOUT: C402

KNOLLCREST SUBDIVISION

LANDSCAPE CONSTRUCTION PLANS

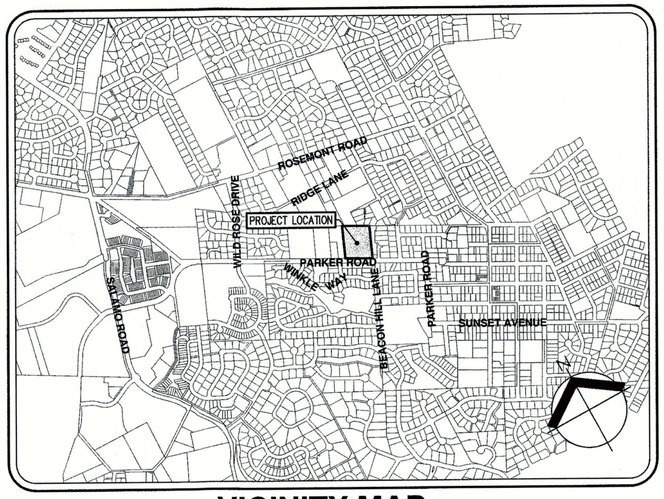

VICINITY MAP

SCALE: 1" = 1000'

LANDSCAPE NOTES:

1. REFER TO INDIVIDUAL LANDSCAPE SHEETS.

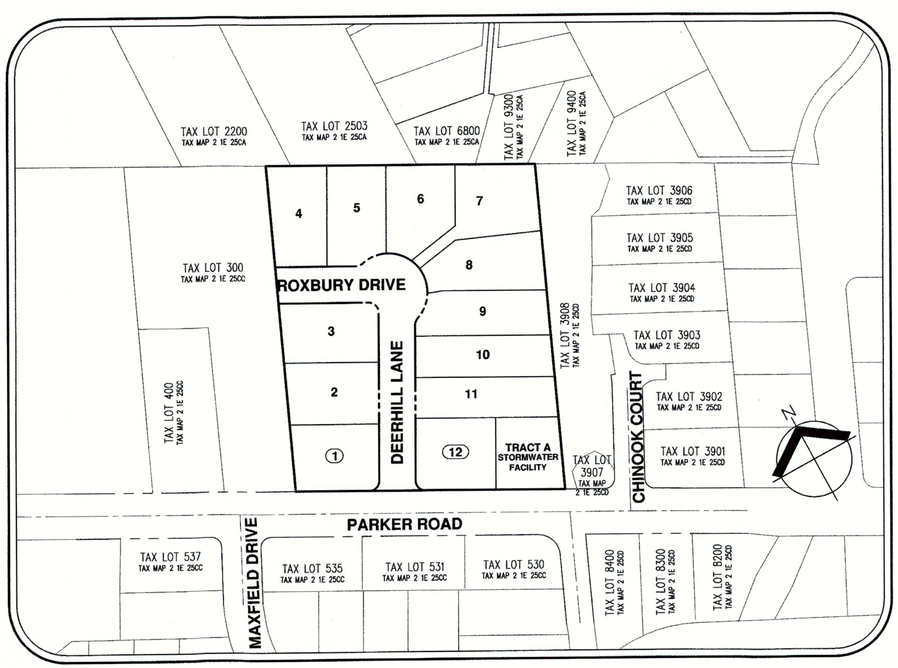

SITE MAP

SCALE: 1" = 100'

SHEET INDEX

L100 LANDSCAPE PLAN COVER SHEET
L101 STREET TREE PLAN
L102 STORMWATER FACILITY PLANTING PLAN
L103 WATER RESOURCE ENHANCEMENT PLAN
L104 LANDSCAPE DETAILS

AKS ENGINEERING & FORESTRY, LLC
12965 SW HERMAN RD STE 100
TUALATIN, OR 97062
P: 503.563.6151
F: 503.563.6152
aks-eng.com

ENGINEERING · SURVEYING · NATURAL RESOURCES
FORESTRY · PLANNING · LANDSCAPE ARCHITECTURE

KNOLLCREST SUBDIVISION

WEST LINN **OREGON**

TAX LOTS 100 & 200 CLACKAMAS COUNTY TAX MAP 2 1E 25CC

LANDSCAPE PLAN COVER SHEET

DESIGNED BY:	NKP
DRAWN BY:	NKP
CHECKED BY:	KAH
SCALE:	AS NOTED
DATE:	12/19/2018

REGISTERED LANDSCAPE ARCHITECT 797 KIRSTI A. HAUSWALD OREGON 06/06/13

REVISIONS

JOB NUMBER
5132

SHEET
L100

AKS DRAWING FILE: 5132 L100 COVER.DWG | LAYOUT: L100

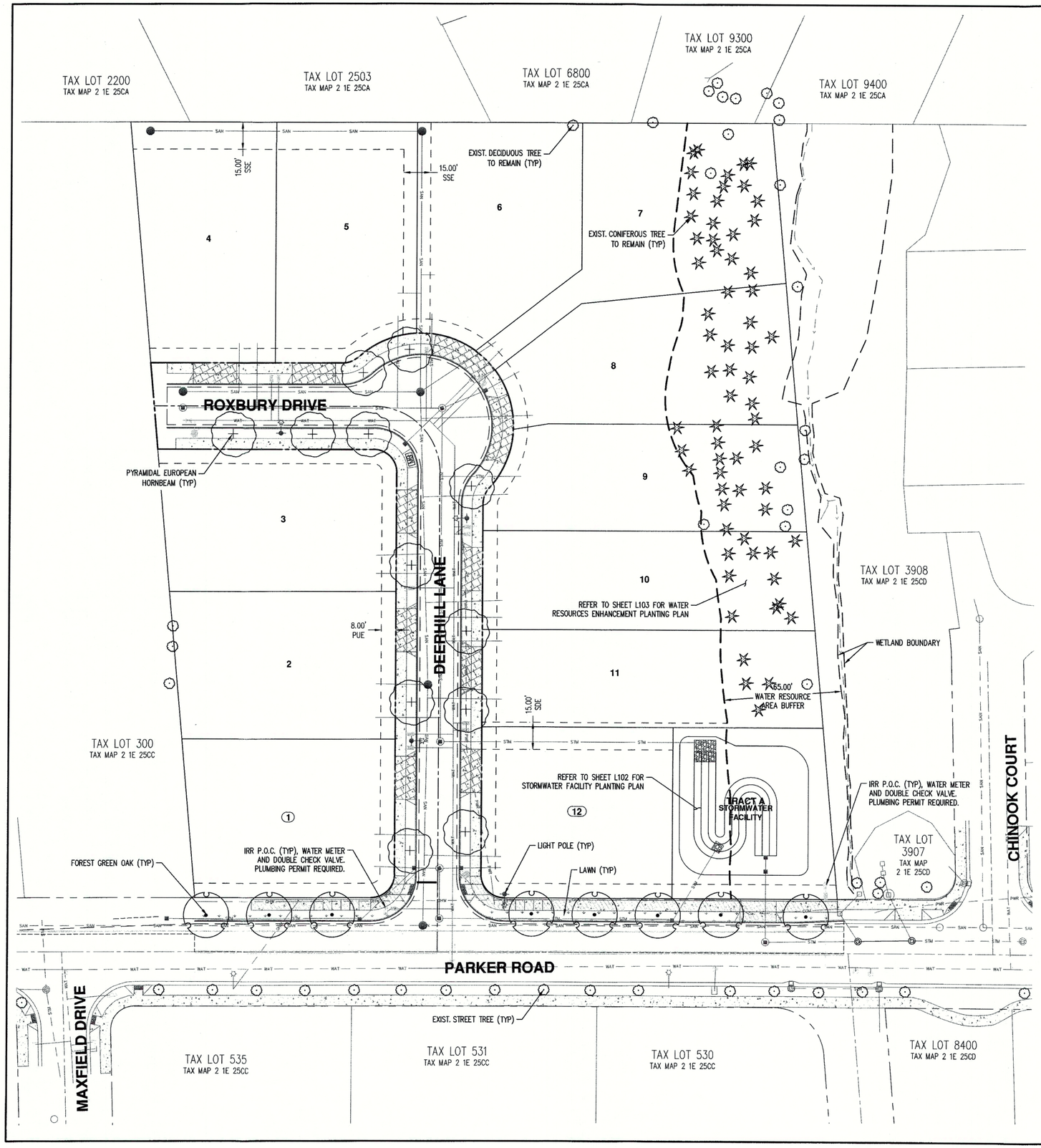

PLANT SCHEDULE

STREET TREES	QTY	BOTANICAL NAME	COMMON NAME	SIZE/CONTAINER	SPACING
	12	CARPINUS BETULUS 'FASTIGIATA'	PYRAMIDAL EUROPEAN HORNBEAN	2" CAL. B&B	AS SHOWN
	8	QUERCUS FRAINETTO 'FOREST GREEN'	FOREST GREEN OAK	2" CAL. B&B	AS SHOWN

GROUND COVERS	QTY	DESCRIPTION
	1,710 SF	LAWN NORTHWEST SUPREME LAWN MIX – SUNMARK SEEDS (OR APPROVED EQUAL) 35% LOLIUM PERENNE V. DASHER 3, 35% LOLIUM PERENNE V. CUTTER II, 15% FESTUCA RUBRA V. GARNET, 15% FESTUCA RUBRA V WINDWARD APPLY AT A RATE OF 8 LBS PER 1,000 SQ FT OR AS RECOMMENDED BY SUPPLIER.

GENERAL NOTES:

1. TREE PLANTING PLAN IS INTENDED TO PORTRAY DESIGN INTENT. CHANGES TO TREE VARIETY, SPACING, ETC BASED ON SITE CONDITIONS AND/OR AVAILABILITY MAY BE MADE WITH APPROVAL BY THE LANDSCAPE CONTRACTOR PRIOR TO FINAL INSTALLATION WHERE ALLOWED BY CITY OF WEST LINN STANDARDS.
2. LANDSCAPE CONTRACTOR IS RESPONSIBLE FOR VERIFYING PLANT AND MATERIAL QUANTITIES. IF DISCREPANCIES OCCUR, DESIGN INTENT PREVAILS OVER QUANTITIES LISTED.
3. LANDSCAPE, IRRIGATION, AND ONGOING MAINTENANCE IN FRONT OF INDIVIDUAL LOTS SHALL BE THE RESPONSIBILITY OF THE HOMEBUILDER AT TIME OF LOT BUILD-OUT, AND SHALL BE THE ONGOING RESPONSIBILITY OF THE ADJACENT LOT OWNER THEREAFTER. CONTRACTOR IS RESPONSIBLE FOR INSTALLING AND IRRIGATING TREES ALONG PARKER ROAD.
4. IT IS THE CONTRACTOR'S RESPONSIBILITY TO SUPPLY STOCK THAT MEETS ANSI 760.1-1996 AND CITY OF WEST LINN TREE TECHNICAL MANUAL STANDARDS. ALL PLANTS AND TREES INSTALLED WITHIN THE CITY OF WEST LINN SHALL CONFORM IN ALL WAYS WITH AMERICAN ASSOCIATION OF STANDARDS, ANSI Z60.1 SPECIFICATIONS FOR ACCEPTANCE OF NURSERY TREES AT THE TIME OF DELIVERY, IN ALL WAYS.
5. PLANTS SHALL BE SOUND, HEALTHY, VIGOROUS, AND FREE OF PLANT DISEASE AND INSECT PESTS AND THEIR EGGS. CONTAINER STOCK SHALL BE GROWN FOR AT LEAST 8-MONTHS IN CONTAINERS IN WHICH DELIVERED AND SHALL NOT BE ROOT BOUND OR HAVE GIRDLING ROOTS. TREES SHALL NOT HAVE BEEN TOPPED OR HEADED. PLANTS AND TREES WITH BROKEN TOPS, BRANCHES OR INJURED TRUNKS SHALL BE REJECTED.
6. TREE STAKES: SUPPORT STAKES SHALL BE TREATED 2-INCH DIAMETER PINE OR EQUAL, TWO STAKES PER TREE. NO CROSS BRACE SHALL BE USED. AFTER INSTALLATION, STAKES SHALL BE TRIMMED SO THAT THE BRANCHES CLEAR THE TOP OF THE STAKE. TREE TIES: TWIST BRACE, FABRIC-REINFORCED RUBBER (3/8-INCH MINIMUM), OR EQUIVALENT APPROVED BY THE CITY OF WEST LINN SHALL BE USED AND INSTALLED IN A FIGURE EIGHT FASHION TO SUPPORT THE TREE TO THE STAKES.
7. PLANTING: ADEQUATE TOPSOIL SHALL BE PROVIDED FOR HEALTHY PLANT ESTABLISHMENT IN ALL PLANTER STRIPS. TOPSOIL STOCKPILED AND REUSED FROM ON-SITE OR IMPORTED FROM OTHER SOURCES SHALL BE ACCEPTABLE. TOPSOIL SHALL BE RICH DARK BROWN IN COLOR, HAVE SUFFICIENT ORGANIC CONTENT FOR PLANT GROWTH, BE FREE DRAINING, AND FREE OF ANY EXTRANEOUS MATERIAL HARMFUL TO PLANT GROWTH. ALL DEBRIS, WOOD CHIPS, PAVEMENT, CONCRETE AND ROCKS OVER 2-INCHES IN DIAMETER SHALL BE REMOVED FROM THE PLANTING PIT TO A MINIMUM OF 24-INCH DEPTH, UNLESS SPECIFIED. TREES IN A CONFINED PLANTER PIT OR SIDEWALK AREA: THE PLANTING HOLE SHALL BE EXCAVATED TO A MINIMUM OF 30-INCHES DEEP X THE WIDTH OF THE EXPOSED AREA.
8. IRRIGATION: LANDSCAPE CONTRACTOR SHALL BE RESPONSIBLE FOR PROVIDING AND INSTALLING A PERMANENT, UNDERGROUND 'DESIGN-BUILD' IRRIGATION SYSTEM TO WATER STREET TREES AND PLANTINGS ON PARKER ROAD. COORDINATE POINT-OF-CONNECTION (POC), CITY APPROVED DOUBLE-CHECK VALVE ASSEMBLY, AND SLEEVING LOCATIONS WITH GENERAL CONTRACTOR PRIOR TO INSTALLATION OF HARD SURFACING (SIDEWALKS, ROADWAYS, ETC.). HOME OWNERS ARE RESPONSIBLE FOR PROVIDING ADEQUATE WATER TO STREET TREES ON THEIR LOTS TO ENSURE PLANT SURVIVAL. NEWLY INSTALLED TREES, INCLUDING DROUGHT TOLERANT SPECIES, ARE DEPENDENT UPON SUPPLEMENTAL IRRIGATION UNTIL ESTABLISHED, TYPICALLY FOR TWO YEARS. PERIODS OF EXTREME HEAT, WIND, OR DROUGHT MAY REQUIRE MORE OR LESS WATER THAN RECOMMENDED. NEW TREES DURING THE ESTABLISHMENT PERIOD (1-2 YEARS) TREES SHOULD BE WATERED THOROUGHLY TO THEIR ROOT DEPTH AS FREQUENTLY AS NEEDED. THE MINIMUM STANDARDS SHALL BE AS FOLLOWS: 3 MONTHS IN THE GROUND: 4 TIMES PER MONTH OR AS NECESSARY; 6 MONTHS IN THE GROUND: 2 TIMES PER MONTH OR AS NECESSARY; 12 MONTHS IN THE GROUND: 1 TIME PER MONTH OR AS NECESSARY.
9. PRUNING: ALL STREET TREES MUST BE PRUNED TO ISA STANDARDS FOR SHADE TREES. STREET TREES HAVING BRANCHES PROJECTING INTO THE STREET OR SIDEWALK SHALL BE PRUNED BY THE OWNERS OF THE PROPERTY ADJACENT TO WHERE THE TREES ARE GROWING AND SHALL BE DONE ACCORDING TO THE REQUIREMENTS FOR TREE BRANCH CLEARANCE OVER STREET AND SIDEWALK AREAS. LIMBS OF TREES MAY BE ALLOWED TO PROJECT OVER THE SIDEWALK AREA AT AN ELEVATION OF NOT LESS THAN 7 1/2 FEET ABOVE THE SIDEWALK LEVEL, AND OVER THE STREET AREA AT AN ELEVATION OF NOT LESS THAN 10 FEET ABOVE THE STREET LEVEL.
10. MULCH: FINE OR MEDIUM GRIND HEMLOCK OR FIR BARK DUST OR APPROVED EQUAL, SPREAD TO A 2-INCH DEPTH X 3' DIAMETER AROUND ALL TREES IN LAWN AREAS.
11. REFER TO SHEET L104 FOR TREE PLANTING DETAIL.

AKS ENGINEERING & FORESTRY, LLC
12965 SW HERMAN RD STE 100
TUALATIN, OR 97062
P: 503.563.6151
F: 503.563.6152
aks-eng.com

AKS
ENGINEERING · SURVEYING · NATURAL RESOURCES
FORESTRY · PLANNING · LANDSCAPE ARCHITECTURE

KNOLLCREST SUBDIVISION

WEST LINN OREGON
TAX LOTS 100 & 200
CLACKAMAS COUNTY TAX MAP 2 1E 25CC

STREET TREE PLAN

DESIGNED BY:	NKP
DRAWN BY:	NKP
CHECKED BY:	KAH
SCALE:	AS NOTED

DATE: 12/19/2013

REGISTERED 797 KIRSTI A. HAUSWALD OREGON 06/06/13 LANDSCAPE ARCHITECT

REVISIONS

JOB NUMBER
5132

SHEET
L101

AKS DRAWING FILE: 5132 STREET TREES.DWG | LAYOUT: L101

STORMWATER FACILITY PLANT SCHEDULE

SHRUBS	QTY	BOTANICAL NAME	COMMON NAME	SIZE/CONTAINER	SPACING
	37	CORNUS SERICEA	RED TWIG DOGWOOD	1 GAL CONT.	AS SHOWN
	42	MAHONIA AQUIFOLIUM	OREGON GRAPE	1 GAL CONT.	AS SHOWN
	27	ROSA PISOCARPA	SWAMP ROSE	1 GAL CONT.	AS SHOWN
	38	SPIRAEA DOUGLASII	WESTERN SPIREA	1 GAL CONT.	AS SHOWN

GROUND COVERS	QTY	BOTANICAL NAME	COMMON NAME	SIZE/CONTAINER	SPACING
	1,737	FRAGARIA CHILOENSIS	COASTAL STRAWBERRY	1 GAL. CONT.	12" o.c.

1,652 SF± BOTTOM OF SWALE PLANT MIX (INSTALL 1.25' ON CENTER, GROUPED IN NATURAL LOOKING MASSES OF SAME SPECIES, MINIMUM OF 7 PLANTS PER GROUPING):
688 CAREX OBNUPTA/SLOUGH SEDGE, MIN. 1 GALLON CONTAINER, PLANTED AT 1.25' O.C.
688 JUNCUS PATENS/SPREADING RUSH, 1 GALLON CONTAINER, PLANTED AT 1.25' O.C.
689 SCIRPUS MICROCARPUS/SMALL-FRUITED BULRUSH, 1 GALLON CONTAINER, PLANTED AT 1.25' O.C.
2,065 PLANTS TOTAL

3,166 SF± NATIVE E/C SEED MIX (OR APPROVED EQUAL) – SUNMARK SEEDS
MEADOW BARLEY (40%); CALIFORNIA BROME (35%); NATIVE RED FESCUE (15%); TUFTED HAIRGRASS (3%); SPIKE BENTGRASS (2%); SKY LUPINE (5%)

APPLY AT A RATE OF 1 LB./1,000 SF OR AS RECOMMENDED BY SUPPLIER.
APPLY ECOLIVE ORGANICS FROM SUNMARK SEEDS IN ADDITION TO THE NATIVE E/C SEED MIX AT A RATE OF 1.5 LBS./1,000 SF.

STORMWATER FACILITY NOTES:

1. PLANTS AND PLANTINGS ARE SHOWN TO PORTRAY THE CHARACTER OF THE SITE AND CONFORM TO THE CITY OF PORTLAND STORMWATER MANAGEMENT MANUAL. PLAN REVISIONS INCLUDING CHANGES TO PLANT SPECIES, SIZES, SPACING, QUANTITIES, ETC., DUE TO PLANT AVAILABILITY OR UNFORESEEN SITE CONDITIONS MAY BE MADE BY THE LANDSCAPE ARCHITECT PRIOR TO INSTALLATION WHERE ALLOWED BY THE CITY OF PORTLAND'S DESIGN STANDARDS. ALL PLANT SUBSTITUTIONS MUST BE FROM THE CITY OF PORTLAND'S STORMWATER MANAGEMENT MANUAL PUBLIC STORMWATER FACILITY PLANT LIST (CURRENT EDITION), AND BE APPROPRIATE FOR SOIL, HYDROLOGIC, AND SITE CONDITIONS.
2. CONTRACTOR IS RESPONSIBLE FOR VERIFYING PLANT QUANTITIES AND ALL MATERIALS PRIOR TO BIDDING AND CONSTRUCTION. IF DISCREPANCIES OCCUR, DESIGN INTENT PREVAILS OVER QUANTITIES LISTED.
3. LANDSCAPE INSTALLATION SHALL CONFORM TO THE CITY OF PORTLAND'S LANDSCAPE DESIGN STANDARDS AND TO AMERICAN NURSERY STANDARDS ASN 1260.1 IN ALL WAYS. PLANT IN ACCORDANCE WITH BEST PRACTICE STANDARDS ADOPTED BY THE OREGON LANDSCAPE CONTRACTOR'S BOARD (OLCB) AND THE AMERICAN ASSOCIATION OF NURSERYMEN, INC. FIELD ADJUST PLANT LOCATIONS AS NECESSARY TO AVOID CONFLICTS WITH UTILITIES, ETC.
4. ALL LANDSCAPING SHALL BE INSTALLED AT THE TIME OF CONSTRUCTION UNLESS OTHERWISE APPROVED BY THE CITY OF WEST LINN DUE TO INCLEMENT WEATHER OR TEMPORARY SITE CONDITIONS. UPON INSTALLATION, ALL PLANT MATERIALS SHALL BE VIGOROUS, WELL-BRANCHED, AND WITH HEALTHY, WELL-FURNISHED ROOT SYSTEMS, FREE OF DISEASE, INSECT PESTS, AND INJURIES.
5. A TEMPORARY IRRIGATION SYSTEM, WITH A PLUMBING PERMIT AND BACKFLOW DEVICE APPROVED BY THE CITY OF WEST LINN, SHALL BE PROVIDED FOR ALL STORMWATER FACILITIES FOR THE ESTABLISHMENT AND LONG-TERM HEALTH OF PLANT MATERIAL. THE IRRIGATION SYSTEM SHALL BE 'DESIGN-BUILD' BY THE LANDSCAPE CONTRACTOR, USING CURRENT WATER-SAVING TECHNOLOGY, AND INCLUDE ALL MATERIALS, COMPONENTS, CITY APPROVED BACKFLOW OR ANTI-SIPHON DEVICES, VALVES, ETC. NECESSARY FOR THE COMPLETE AND EFFICIENT COVERAGE OF STORMWATER AREAS SHOWN. THE LANDSCAPE CONTRACTOR SHALL COORDINATE WITH THE GENERAL CONTRACTOR AND OWNER FOR POINT-OF-CONNECTION (POC), SLEEVING LOCATION, AND MAINLINE LAYOUT PRIOR TO ANY PAVING REPAIR OR STRIPING, AND SHALL PROVIDE CITY OF WEST LINN WITH IRRIGATION PLAN INCLUDING ZONING AND COMPONENT LAYOUT FOR APPROVAL PRIOR TO INSTALLATION. TEMPORARY IRRIGATION SYSTEM SHALL BE REMOVED ONCE PLANTS ARE FULLY ESTABLISHED, GENERALLY 2 TO 3 YEARS.
6. SOIL: GROWING MEDIUM FOR VEGETATED STORMWATER FACILITIES SHALL BE PLACED AT A MINIMUM DEPTH OF 18" OVER NATIVE SOIL, UNLESS OTHERWISE NOTED. GROWING MEDIUM MUST CONFORM TO SPECIFICATIONS OUTLINED IN 01040.14(D)(1) OF CITY OF PORTLAND STORMWATER MANAGEMENT MANUAL, CURRENT EDITION. A BLEND OF LOAMY SOIL, SAND, AND COMPOST THAT IS 30-40% COMPOST (BY VOLUME) WHICH MEETS OTHER PORTLAND STORMWATER MANAGEMENT MANUAL CRITERIA AS SPECIFIED. MEDIUM SHALL BE LOOSE AND FRIABLE, WELL MIXED AND HOMOGENOUS, FREE OF WOOD PIECES, PLASTIC, AND OTHER FOREIGN MATTER AND HAVE NO VISIBLE FREE WATER.
7. MULCH: FINE TO MEDIUM HEMLOCK BARK SHALL BE PLACED AT A DEPTH OF 2" – 3" ABOVE HIGH WATER MARK, IN PLANTING ZONE B. MULCH SHALL NOT BE PLACED SUCH THAT IT MAY ENTER WATERWAYS OR CLOG INLETS/OUTLETS. MULCH MUST BE WEED FREE AND APPLIED 2"-3" THICK TO COVER ALL SOIL BETWEEN PLANTS. IT SHOULD NOT BE OVER-APPLIED.
8. REFER TO SHEET L104 FOR STORMWATER FACILITY PLANTING DETAILS.

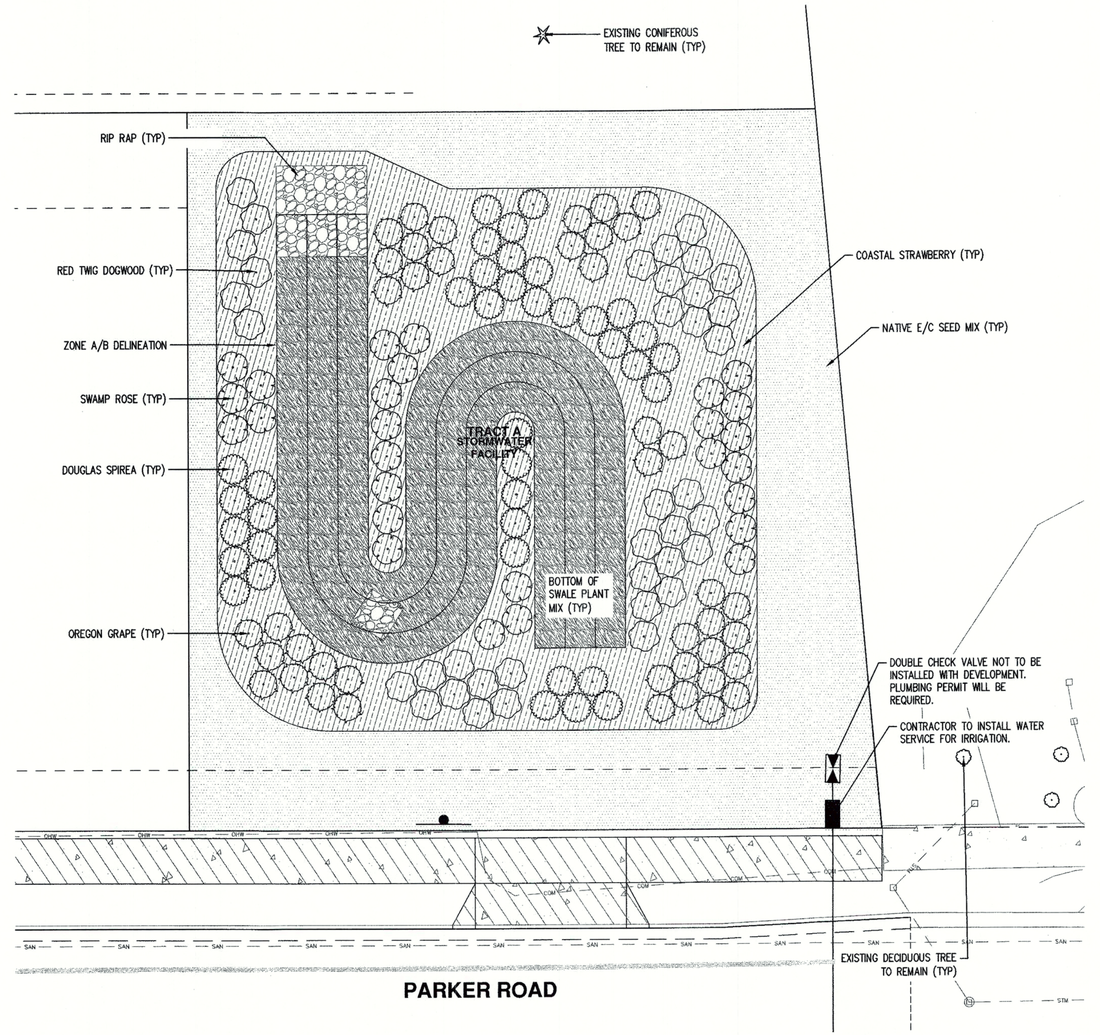

N

SCALE: 1"=10 FEET

10 0 4 6 8 10

AKS ENGINEERING & FORESTRY, LLC
12965 SW HERMAN RD STE 100
TUALATIN, OR 97062
P: 503.563.6151
F: 503.563.6152
aks-eng.com

ENGINEERING · SURVEYING · NATURAL RESOURCES
FORESTRY · PLANNING · LANDSCAPE ARCHITECTURE

KNOLLCREST SUBDIVISION

WEST LINN OREGON

TAX LOTS 100 & 200 CLACKAMAS COUNTY TAX MAP 2 1E 25CC

STORMWATER FACILITY PLANTING PLAN

DESIGNED BY:	NKP
DRAWN BY:	NKP
CHECKED BY:	KAH
SCALE:	AS NOTED
DATE:	12/19/2012

REGISTERED 791 KIRSTI A. HAUSWALD OREGON 06/06/13 LANDSCAPE ARCHITECT

REVISIONS

JOB NUMBER 5132

SHEET L102

AKS DRAWING FILE: 5132 STORMWATER FACILITY PLANTING.DWG | LAYOUT: L102

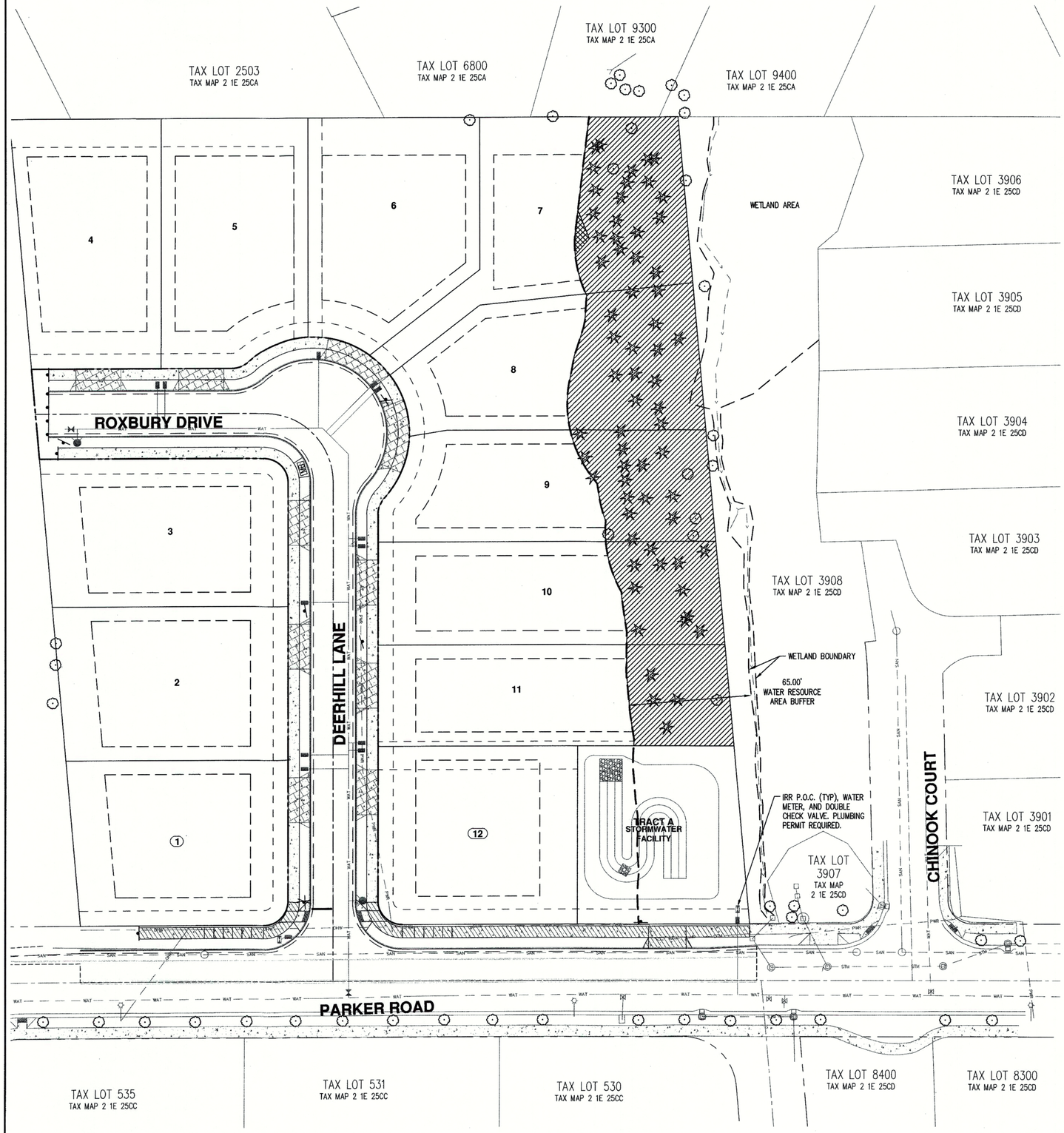

WATER RESOURCE AREA (WRA) ENHANCEMENT PLANTING SPECIFICATIONS

PLANTING SPECIFICATIONS FOR THE RESTORATION OF 95 SQUARE FEET OF TEMPORARILY DISTURBED WRA.

SCIENTIFIC NAME	COMMON NAME	SIZE*	SPACING/SEEDING RATE	QUANTITY
SHRUBS (TOTAL 5)				
POLYSTICHUM MUNITUM	SWORD FERN	2 GALLON	4–5 FEET ON CENTER	2
MAHONIA AQUIFOLIUM	TALL OREGON GRAPE	1 GALLON	4–5 FEET ON CENTER	1
SAMBUCUS RACEMOSA	RED ELDERBERRY	1 GALLON	4–5 FEET ON CENTER	1
SYMPHORICARPOS ALBUS	COMMON SNOWBERRY	1 GALLON	4–5 FEET ON CENTER	1
SEED MIX				
AGROSTIS EXARATA	SPIKE BENTGRASS	SEED	1 LB PLS/ACRE	AS NEEDED FOR BARE SOIL
DESCHAMPSIA ELONGATA	SLENDER HAIRGRASS	SEED	2 LBS PLS/ACRE	AREAS >25 SQUARE FEET

*BARE ROOT PLANTS MAY BE SUBSTITUTED FOR CONTAINER PLANTS BASED ON AVAILABILITY. IF BARE ROOT PLANTS ARE USED, THEY MUST BE PLANTED DURING THE LATE WINTER/EARLY SPRING DORMANCY PERIOD. PLANTING SPECIFICATIONS FOR THE RE-VEGETATION ENHANCEMENT OF 19,612 SF OF WRA TO OFF-SET PERMANENTLY DISTURBED WRA.

PLANTING SPECIFICATIONS FOR THE RE-VEGETATION ENHANCEMENT ON 19,612 SF OF WRA TO OFF-SET PERMANENTLY DISTURBED WRA.

SCIENTIFIC NAME	COMMON NAME	SIZE*	SPACING/SEEDING RATE	QUANTITY
TREES (TOTAL 30)				
RHAMNUS PURSHIANA	CASCARA	2 GALLON	8–12 FEET ON CENTER	15
PRUNIS EMARGINATA	BITTER CHERRY	2 GALLON	8–12 FEET ON CENTER	15
SHRUBS (TOTAL 981)				
ROSA GYMNOCARPA	BALDHIP ROSE	1 GALLON	4–5 FEET ON CENTER	197
MAHONIA AQUIFOLIUM	TALL OREGON GRAPE	1 GALLON	4–5 FEET ON CENTER	196
AMELANCHIER ALNIFOLIA	SERVICEBERRY	1 GALLON	4–5 FEET ON CENTER	196
SAMBUCUS RACEMOSA	RED ELDERBERRY	1 GALLON	4–5 FEET ON CENTER	196
SYMPHORICARPOS ALBUS	COMMON SNOWBERRY	1 GALLON	4–5 FEET ON CENTER	196
SEED MIX				
AGROSTIS EXARATA	SPIKE BENTGRASS	SEED	1 LB PLS/ACRE	AS NEEDED FOR BARE SOIL
DESCHAMPSIA ELONGATA	SLENDER HAIRGRASS	SEED	2 LBS PLS/ACRE	AREAS >25 SQUARE FEET

*BARE ROOT PLANTS MAY BE SUBSTITUTED FOR CONTAINER PLANTS BASED ON AVAILABILITY. IF BARE ROOT PLANTS ARE USED, THEY MUST BE PLANTED DURING THE LATE WINTER/EARLY SPRING DORMANCY PERIOD.

PLANTING AND MAINTENANCE NOTES (PER CITY OF WEST LINN CHAPTER 32.100 RE-VEGETATION PLAN REQUIREMENTS)

1. ALL TREES, SHRUBS AND GROUND COVER TO BE PLANTED MUST BE NATIVE PLANTS SELECTED FROM THE PORTLAND PLANT LIST.
2. PLANT SIZE: SHRUBS MUST BE IN AT LEAST A 1-GALLON CONTAINER OR THE EQUIVALENT IN BALL AND BURLAP AND MUST BE AT LEAST 12 INCHES IN HEIGHT.
3. WHEN PLANTING NEAR EXISTING TREES, THE DRIPLINE OF THE EXISTING TREE MUST BE THE STARTING POINT FOR PLANT SPACING MEASUREMENTS.
4. INVASIVE VEGETATION: INVASIVE NON-NATIVE OR NOXIOUS VEGETATION MUST BE REMOVED WITHIN THE MITIGATION AREA PRIOR TO PLANTING.
5. TREE AND SHRUB SURVIVAL: A MINIMUM SURVIVAL RATE OF 80% OF THE TREES AND SHRUBS PLANTED IS EXPECTED BY THE THIRD ANNIVERSARY OF THE DATE THAT THE MITIGATION PLANTING IS COMPLETED.
6. MONITORING AND REPORTING: MONITORING OF THE MITIGATION SITE IS THE ONGOING RESPONSIBILITY OF THE PROPERTY OWNER. PLANTS THAT DIE MUST BE REPLACED IN KIND.
7. MULCHING: MULCH NEW PLANTINGS A MINIMUM OF 3 INCHES IN DEPTH AND 18 INCHES IN DIAMETER TO RETAIN MOISTURE AND DISCOURAGE WEED GROWTH.
8. IRRIGATION: WATER NEW PLANTINGS 1 INCH PER WEEK BETWEEN JUNE 15TH AND OCTOBER 15TH FOR THE THREE YEARS FOLLOWING PLANTING.
9. PLANTING SEASON: PLANT BARE ROOT TREES BETWEEN DECEMBER 1ST AND FEBRUARY 28TH, AND POTTED PLANTS BETWEEN OCTOBER 15TH AND APRIL 30TH.
10. WILDLIFE PROTECTION: USE PLANT SLEEVES OR FENCING TO PROTECT TREES AND SHRUBS AGAINST WILDLIFE BROWSING AND RESULTING DAMAGE TO PLANTS.

N

SCALE: 1"= 30 FEET

30 0 12 18 24 30

AKS ENGINEERING & FORESTRY, LLC
12965 SW HERMAN RD STE 100
TUALATIN, OR 97062
P: 503.563.6151
F: 503.563.6152
aks-eng.com

ENGINEERING · SURVEYING · NATURAL RESOURCES
FORESTRY · PLANNING · LANDSCAPE ARCHITECTURE

KNOLLCREST SUBDIVISION

WEST LINN OREGON
TAX LOTS 100 & 200 CLACKAMAS COUNTY, TAX MAP 2 1E 25CC

WATER RESOURCE ENHANCEMENT PLAN

DESIGNED BY:	NKP
DRAWN BY:	NKP
CHECKED BY:	KAH
SCALE:	AS NOTED
DATE:	12/19/2018

REGISTERED 797 KIRSTI A. HAUSWALD OREGON 06/06/13 LANDSCAPE ARCHITECT

REVISIONS

JOB NUMBER
5132

SHEET
L103

AKS DRAWING FILE: 5132 WRA SITE PLAN.DWG | LAYOUT: L104

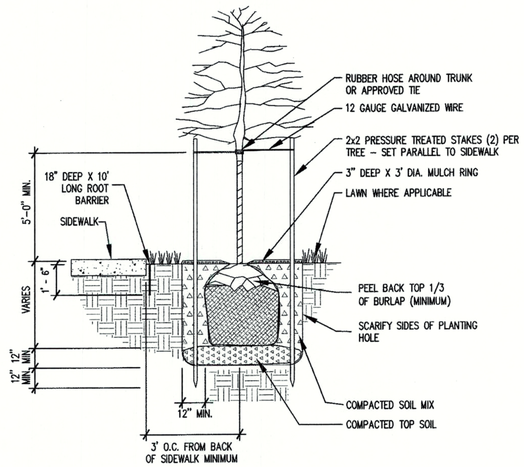

1 / L104 TYPICAL STREET TREE PLANTING DETAIL

NTS

NOTES:

1. DRIVE STAKES OUTSIDE OF ROOTBALL PARALLEL TO STREET AND SIDEWALK.
2. SET TREE 3" ABOVE FINISH GRADE TO ALLOW FOR SETTLING OF SOIL AND BARK MULCH APPLICATION. FINISH GRADE OF SOIL/BARK MULCH SHALL NOT COVER NATURAL ROOT FLARE. KEEP MULCH A MINIMUM OF 2" FROM BARK OF TREE.
3. PROVIDE AN 18" DEEP BY 10' LONG ROOT BARRIER DIRECTLY NEXT TO AND SLIGHTLY BELOW LEVEL OF SIDEWALK WHERE TREES ARE WITHIN 4' OF HARDSCAPING (CURBS, SIDEWALKS, DRIVES, ETC.). CENTER BARRIER ON TREE TRUNK. ROOT BARRIER SHALL BE DEEP ROOT UB 18-2 ROOT BARRIER PANELS OR OTHER APPROVED EQUAL. INSTALL PER MANUFACTURE'S RECOMMENDATIONS.
4. SOIL MIX FOR TREE PLANTING TO BE 1/3 ORGANIC MATERIALS, 1/3 TOPSOIL, AND 1/3 SANDY LOAM.
5. REMOVE ALL WIRES, METAL BASKETS, TWINE, AND OTHER NON-BIODEGRADABLE MATERIALS FROM TREE ROOTBALL PRIOR TO PLANTING.
6. CONTRACTOR SHALL WATER-SETTLE PLANTING HOLES TO REMOVE AIR POCKETS PRIOR TO SPREADING MULCH.

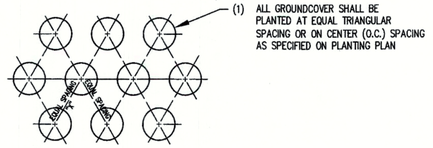

2 / L104 TYPICAL GROUNDCOVER PLANTING DETAIL

NTS

1. REMOVE ALL CONTAINERS, METAL, TWINE, TAGS, AND OTHER NON-BIODEGRADABLE MATERIALS PRIOR TO PLANTING.
2. ALL CONTAINERIZED PLANT STOCK SHALL BE VIGOROUS, FREE OF DISEASE AND PESTS, EVENLY FORMED, AND BE FULLY ROOTED IN THE CONTAINER IN WHICH THEY ARE DELIVERED. ALL PLANTS SHALL FOLLOW ANSI Z60.1 STANDARDS FOR NURSERY STOCK FOR CONTAINER SIZE, HEIGHT, ETC.
3. CONTRACTOR SHALL WATER-SETTLE PLANTING HOLES TO REMOVE AIR POCKETS.

AKS ENGINEERING & FORESTRY, LLC
12965 SW HERMAN RD STE 100
TUALATIN, OR 97062
P: 503.563.6151
F: 503.563.6152
aks-eng.com

AKS

ENGINEERING · SURVEYING · NATURAL RESOURCES
FORESTRY · PLANNING · LANDSCAPE ARCHITECTURE

KNOLLCREST SUBDIVISION

WEST LINN OREGON

TAX LOTS 100 & 200 CLACKAMAS COUNTY TAX MAP 2 1E 25CC

LANDSCAPE DETAILS

DESIGNED BY:	NKP
DRAWN BY:	NKP
CHECKED BY:	KAH
SCALE:	AS NOTED
DATE:	12/19/2018

REGISTERED 797 KIRSTI A. HAUSWALD OREGON 06/06/13 LANDSCAPE ARCHITECT

REVISIONS

JOB NUMBER 5132

SHEET

L104

AKS DRAWING FILE: 5132 STREET TREES.DWG | LAYOUT: L103