City of West Linn	**INVITATION FOR BID** CONSTRUCTION PROJECT	**Public Works Department** 22500 Salamo Road West Linn, Oregon 97068 Telephone: (503) 722-5500 Fax: (503) 656-4106

City of West Linn

Plans and Bid Documents

Project Number: **PW-18-01**

Project Description: **South Fork 24-Inch Pipe Restraint**

Prospective Bidders' Conference:	June 12, 2018	2:00 p.m., local time
Due Date:	June 21, 2018	11:00 a.m., local time

Plans and Specifications are available for download at no charge from the City's website at http://bids.westlinnoregon.gov

Alternately, copies may be reviewed or picked-up for a $50.00 fee per set at:

Public Works Department
Engineering Division
22500 Salamo Road
West Linn, Oregon 97068

PROSPECTIVE BIDDERS' CONFERENCE

ATTENDANCE IS OPTIONAL

It is highly encouraged that Contractors and Subcontractors visit the site.

City of West Linn, Oregon

Notice of Invitation for Bid and Contract

GENERAL

NOTICE OF INVITATION TO BID AND CONTRACT 3
STANDARD TERMS AND CONDITIONS 5
GENERAL TERMS AND CONDITIONS 12
SPECIAL TERMS AND CONDITIONS 24

APPENDIX A

FORMS REQUIRED FOR SUBMITTAL WITH BID

1. NOTICE OF INVITATION TO BID AND CONTRACT
2. BID FORM
3. BID BOND
4. NONCOLLUSION AFFADAVIT
5. THREE YEAR EXPERIENCE RECORD
6. FIRST-TIER SUBCONTRACTOR DISCLOSURE (WH-179)
   Submit within 2 hours of bid closing.
7. AFFADAVIT OF COMPLIANCE WITH TAX LAWS
8. SIGNED ADDENDA (IF ANY)

FORMS NOT REQUIRED AT TIME OF BID

1. PERFORMANCE BOND
2. PAYMENT BOND
3. CONTRACTOR'S AFFADAVIT, SETTLEMENT OF CLAIMS
4. PUBLIC WORKS FEE INFORMATION FORM (WH-39)
   To be completed and paid by City upon award
5. NOTICE OF PUBLIC WORKS (WH-81)
   To be completed by City upon award.
6. PUBLIC WORKS FEE ADJUSTMENT FORM (WH-40)
   To be completed by City after final completion of project.
7. PAYROLL INSTRUCTIONS (WH-38A)
8. PAYROLL/CERTIFIED STATEMENT FORM (WH-38)
9. CURRENT PREVAILING WAGE RATE COVER AND AMENDMENTS
   The complete prevailing wage rate documents can be downloaded from the Oregon Bureau of Labor and Industries website at http://www.oregon.gov/boli/WHD/PWR/pages/pwr_state.aspx

APPENDIX B

TECHNICAL SPECIAL PROVISIONS

APPENDIX C

PLANS

APPENDIX D

SUPPLEMENTARY INFORMATION

City of West Linn, Oregon

Notice of Invitation for Bid and Contract

Project Number:	**PW-18-01**	Bid Due Date:	**June 21, 2018**
Project Name:	South Fork 24-Inch Pipe Restraint Project	Bid Due Time:	11:00 a.m.
Bid Opening Location:	City of West Linn – City Hall Bolton Conference Room 22500 Salamo Rd., West Linn, OR 97068	Contact: Title:	Erich Lais Assistant City Engineer
Time of Completion:	120 calendar days	Phone:	(503) 722-3434

Project Description: The Work contemplated generally consists of the following:

Restrain existing unrestrained pipe joints on a 24-inch diameter steel water transmission main located on a steep slope above Abernethy Creek in Oregon City, OR. Field locate existing pipe joints via closed circuit TV (CCTV) by cutting into the existing water main near the top of the slope and inserting a CCTV camera to identify and record joint locations for excavation and joint restraint welding. Work includes cut-in installation of two isolation valves located at the top of the slope and within Clackamas County's maintenance yard north of Abernethy Creek, and testing and disinfection of the water main.

Sealed bids for the project identified and described above will be received by the City of West Linn at the specified location above until the date and time cited above. Bids received by the correct date and time shall be publicly opened and the bid price read. Bids shall be in the actual possession of the identified bidding department on or prior to the exact date and time indicated above. Late bids will not be considered, except as provided in the City of West Linn Procurement Policy. ***Bids shall be submitted in a sealed envelope with the Invitation for Bid Project Number, Project Description, and the bidder's name and address clearly indicated on the front of the envelope***. All bids shall be completed in ink or typewritten. This Bid is for a public works project subject to ORS 279C.800 to 279C.870. Bidders are strongly encouraged to carefully read the ***entire*** Invitation for Bid Package.

BIDDER

To the City of West Linn:

The undersigned hereby Bids and agrees to furnish materials and/or services in compliance with all terms, conditions, specifications and addenda in the Notice of Invitation for Bid except for any written exceptions in the Bid. The signature below also certifies his or her understanding and compliance with The City of West Linn Standard Terms and Conditions.

Is the Bidder a "Resident" Bidder per ORS 279A.120? _____ Yes/No

Construction Contractors Board Registration Number: _____

Federal Employer Identification Number: _____

For clarification of this Bid contact:

Name: _____

Telephone: _____

_____ Company Name

_____ Authorized Signature for Bidder

_____ Address

_____ Printed Name

_____ City State Zip Code

_____ Title

City of West Linn, Oregon

Notice of Invitation for Bid and Contract

ACCEPTANCE OF BID AND CONTRACT AWARD (For City of West Linn Use Only)

Your bid is hereby accepted. The Contractor is now bound to sell the materials and/or services listed by the attached award notice based upon the solicitation, including all terms, conditions, specifications, plans, addendum, amendments, etc., and the Contractor's Bid as accepted by the City.

	City of West Linn, Oregon.
Approved as to form:	Awarded on _____, _____.
_____ Megan Thornton Assistant City Attorney	_____ Eileen Stein, City Manager

Public Works Department
22500 Salamo Road
West Linn, Oregon 97068
Telephone: (503) 722-5500
Fax: (503) 656-4106

1. **PREPARATION OF BID:**

   a. All bids shall be submitted on the forms provided in this *Invitation to Bid* package. It is permissible to copy these forms if required. Telegraphic (facsimile), electronic or mailgram bids will not be considered.

   b. The Bid and Contract Award document shall be submitted with an original ink signature by a person authorized to sign the Bid.

   c. Erasures, interlineations, or other modifications in the bid shall be initialed in original ink by the authorized person signing the Bid.

   d. If price is a consideration and in case of error in the extension of prices in the bid, the unit price shall govern. No bid shall be altered, amended, or withdrawn after the specified bid due date and time.

   e. Periods of time, stated as a number of days, shall be calendar days.

   f. Bid due date and time is stated as local Oregon time.

   g. The following items must be completed as part of the Bid submittal; Notice of Invitation for Bid and Contract (indicating Oregon Construction Contractors Board License Number), Bid Form, Bid Guaranty (Bond), Non-Collusion Affidavit, Three-Year Experience, and Addenda. Within two (2) hours of the Bid submittal, or with the Bid submittal, the First Tier Subcontractor Disclosure Form must be submitted if the bid is greater than $100,000.

   h. It is the responsibility of all Bidders to examine the entire *Invitation For Bid* package and seek clarification of any item or requirement that may not be clear and to check all responses for accuracy before submitting a bid. Negligence in preparing a Bid confers no right of withdrawal after bid due date and time.

2. **INQUIRIES:** Any question related to the *Invitation For Bid* (*IFB*) shall be directed to the Buyer whose name appears as the Contact on the *IFB*. The Bidder shall not contact or ask questions of the department for which the requirement is being procured. Questions should be submitted in writing when time permits. The Buyer may require any and all questions be submitted in writing at the Buyer's sole discretion. Any correspondence related to an *Invitation For Bid* should refer to the appropriate *IFB* number, page, and paragraph number. All requests for additional information or interpretation of the *IFB* shall be submitted to the Buyer no later than five (5) calendar days before the deadline for submission of bids. If, in the opinion of the City, additional information or clarification is required, an addendum will be issued to all plan holders on record. Any addenda issued by the City seventy-two (72) hours or more before the scheduled closing time for filing bids shall be binding upon the Bidder. Addenda may be downloaded from the City's website. Bidders shall frequently check the City's website until closing including at least daily the week of the closing. Failure of the Bidder to receive or obtain such addenda shall not excuse them from compliance therewith if they are awarded the contract. Oral instructions or information given by City Officers, employees or agents to Bidders concerning this *IFB* or the work in general shall not bind the City.

3. **PROSPECTIVE BIDDERS CONFERENCE (OPTIONAL):** A prospective Bidders conference will be held. If scheduled, the date and time of this conference will be indicated on the cover page of this document. The purpose of this conference will be to clarify the contents of this *Invitation For Bid* in order to prevent any misunderstanding of the City's position. Any doubt as to the requirements of this *Invitation For Bid* or any apparent omission or discrepancy should be presented to the City at this conference. The City will then determine if any action is necessary and may issue a written addendum to the *IFB*.

4. **LATE BIDS:** Late Bids received after the scheduled bid due date and time will be returned to the Bidder unopened.

5. **WITHDRAWAL OF BID:** At any time prior to the specified bid due date and time, a Bidder (or designated representative) may withdraw the bid.

6. **ADDENDUM OF BID:** Receipt of Addendum shall be acknowledged by signing and returning the document with the Bid at the specified bid due date and time.

7. **CONSTRUCTION CONTRACTORS REGISTRATION:** A person shall not submit a bid or proposal to work as a construction contractor unless that person is first registered with the Construction Contractors Board as required by ORS 701.021 or licensed by the State Landscape Contractor's Board as required by ORS 671.530. Bids from persons who fail to comply with this requirement shall be deemed non-responsive and be rejected.

8. **AWARD OF CONTRACT:**

   a. Notwithstanding any other provision of this *Invitation For Bid*, The City expressly reserves the right to: waive any immaterial defect or informality, reject any bids that do not comply with the prescribed public contracting procedures (including the requirement to demonstrate the bidder's responsibility under ORS 279C.375 (3)(b)), reject all bids for good cause if in the public interest, or reissue an *Invitation For Bid*.

   b. A response to an *Invitation For Bid* is a Bid to contract with the City based upon the terms, conditions and specifications contained in the City's *Invitation For Bid* and the written addenda thereto, if any. Bids do not become contracts unless and until they are accepted and executed by the **City Local Contract Review Board, City Manager or Department Director** in accordance with the City of West Linn Procurement Policy. A contract is formed when written notice of award(s) is provided to the successful Bidder(s). The contract has its inception in the award document, eliminating a formal signing of a separate contract. For that reason, all of the terms and conditions of the procurement contract are contained in the *Invitation For Bid*; unless modified by an Addendum.

Public Works Department
22500 Salamo Road
West Linn, Oregon 97068
Telephone: (503) 722-5500
Fax: (503) 656-4106

THE FOLLOWING TERMS AND CONDITIONS ARE AN EXPLICIT PART OF THE SOLICITATION AND ANY RESULTANT CONTRACT.

1. **APPLICABLE LAW:** In the performance of this agreement, contractors shall abide by and conform to any and all laws of the United States, State of Oregon and City of West Linn including but not limited to federal and state executive orders providing for equal employment and procurement opportunities, the Federal Occupational Safety and Health Act and any other federal or state laws applicable to this agreement.

   Attention is called to the requirements of Oregon Revised Statutes (O.R.S.) Chapter 279A, 279B, and 279C. This contract shall be governed by the laws of the State of Oregon. Any action or suits pertaining to this contract may be brought only in courts in the Circuit Court of Clackamas County or the U.S. District Court in Portland. Each and every provision of law and any clause required by law to be in the contract will be read and enforced as though it were included herein, and if through mistake or otherwise any such provision is not inserted, or is not correctly inserted, then upon the application of either party, the contract will forthwith be physically amended to make such insertion or correction.

   The City may cancel this contract without penalty or further obligations by the City or any of its departments or agencies if any person significantly involved in initiating, negotiating, securing, drafting or creating the contract on behalf of the City or any of its departments or agencies, is at any time while the contract or any extension of the contract is in effect, an employee of any other party to the contract in any capacity or a consultant to any other party of the contract with respect to the subject matter of the contract.

2. **AMERICANS WITH DISABILITIES ACT, DISCRIMINATION & AFFIRMATIVE ACTION:** Bidders agree that if awarded a contract, the successful Bidder will comply with all applicable provisions of the Americans with Disabilities Act of 1990, 42 UFC Section 12101 et seq. If any Bidder requires special assistance or auxiliary aids during the bidding process, please notify the City of West Linn, 503-657-0331 or TDD 503-657-7845 at least two (2) business days prior to the required assistance. To the extent applicable, the Contractor represents that it will comply with Executive Order 11246 as amended, Executive Order 11141, Section 503 of the Vocational Rehabilitation Act of 1973 as amended and the Age Discrimination Act of 1975, and all rules and regulations issued pursuant to the Acts. It is the policy of the City of West Linn that suppliers of goods or services to the City adhere to a policy of equal employment opportunity and demonstrate an affirmative effort to recruit, hire, and promote regardless of race, color, religion, gender, national origin, age or disability. By submitting the first tier subcontractor disclosure form, Bidder certifies that it has complied with ORS 279A.110(1), which states that a bidder may not discriminate against a subcontractor in awarding a subcontract because the subcontractor is a minority, women or emerging business enterprise certified under ORS 200.055 or a business enterprise that is owned or controlled by, or that employs a disabled veteran.

3. **BUSINESS LICENSE:** A current business license is required before doing business with the City. Information related to complying with the business license requirements is available by contacting the City Finance Department at 503-657-0331 or online at https://westlinnoregon.gov/finance/online-business-license-registration.

4. **CONSTRUCTION AND LANDSCAPE CONTRACTORS BOARDS:** Construction contractors must be licensed with the State of Oregon Construction Contractors Board in accordance with O.R.S. 701.005 and any other specialty licensing as required in the bid specification prior to submitting a bid to the City. For information contact:

   CONSTRUCTION CONTRACTORS BOARD
   700 Summer St. NE, Suite #300, Salem, OR 97310
   (503) 378-4621 (website) http://www.ccb.state.or.us

   A Landscape Contractors Board license is required in accordance with O.R.S. 671.510 if the bid specification includes landscape work as defined by O.R.S. 671.510. For information contact:

   LANDSCAPE CONTRACTORS BOARD
   2111 Front St. NE, Suite #2-101, Salem, OR 97310
   (503) 378-5909 (website) http://www.oregon.gov/LCB/

Public Works Department
22500 Salamo Road
West Linn, Oregon 97068
Telephone: (503) 722-5500
Fax: (503) 656-4106

5. **LEGAL REMEDIES:** All claims and controversies shall be subject to resolution according to the terms of the City of West Linn Procurement Policy.

6. **BID GUARANTY:** All construction contracts shall be accompanied by a bid guaranty. No bid for construction will be considered unless accompanied by a certified check, cashier's check, or a bid bond for an amount not less than ten percent (10%) of the aggregate amount of the bid by a surety company authorized to issue such bonds in the State of Oregon. It shall be payable to the City of West Linn as a guaranty that the bid shall be irrevocable for a period of sixty (60) calendar days, unless otherwise specified, after the bid opening date and time and as liquidated damages should the Bidder fail or neglect to furnish the required performance bond and insurance and execute a contract within ten (10) calendar days after receiving said contract from the City for execution. The City will hold all bid security during the evaluation process. As soon as is practical after the completion of the evaluation, the City will issue a contract award notice for those Bids accepted by the City and return all checks to those who have not been issued a contract award notice.

   All bid security from contractors who have been issued an award notice shall be held until the successful execution of all required contractual documents and bonds (performance bond, insurance, etc.). If the contractor fails to execute the required contractual documents and bonds within the time specified, or ten (10) days after notice of award if no period is specified, the contractor may be found to be in default and the contract terminated by the City. In case of default, the City reserves all rights inclusive of, but not limited to, the right to purchase material and/or to complete the required work in accordance with the City of West Linn Procurement Policy and to recover any actual excess costs from the contractor. Collection against the bid security shall be one of the measures available toward the recovery of any excess costs.

7. **CONFLICT OF INTEREST:** A Bidder submitting a bid hereby certifies that no officer, agent or employee of the City who has a pecuniary interest in this bid has participated in the contract negotiations on the part of the City, that the bid is made in good faith without fraud, collusion, or connection of any kind with any other Bidder of the same Invitation for Bids, and that the Bidder is competing solely in its own behalf without connection with, or obligation to, any undisclosed person or firm. No bid will be considered unless accompanied by the notarized Non-Collusion Affidavit form included in the Invitation for Bid.

8. **PRE-BID REQUIREMENTS:** Before submitting a bid, each Bidder shall carefully examine the Drawings, read the Specifications and all Addenda and visit the work site, if applicable. Each Bidder shall fully inform themselves prior to submitting a bid as to all existing conditions and limitations under which the Work is to be performed, and shall include in the bid a sum to cover all costs of all items necessary to perform the Work as set forth in the Bid Documents. No allowance will be made to any Bidder because of lack of such examination or knowledge. Submission of a bid will be construed as conclusive evidence that the Bidder has made such examination.

9. **LOCAL BUSINESS PREFERENCE:** ORS 279A.120 requires that, in all public contracts, the public contracting agency shall prefer good or services that have been manufactured or produced in this State if price, fitness, availability and quality are otherwise equal. As such the City desires to employ local businesses in the purchase, lease, or sale of any personal property, public improvements or services that have been manufactured or produced by a local business if price, fitness, availability and quality are otherwise equal. When a public contract is awarded to a nonresident bidder and the contract price exceeds $10,000, the bidder shall promptly report to the Department of Revenue on forms provided by the department all information as required by ORS 279A.120(3).

10. **COST OF BID/PROPOSAL PREPARATION:** The City shall not reimburse the cost of developing, presenting, or providing any response to this solicitation. Bids submitted for consideration should be prepared simply and economically, providing adequate information in a straightforward and concise manner. The Invitation For Bid does not commit the City to pay any costs incurred by a Bidder in the submission of their bid, or in making any necessary studies or designs for the preparation thereof.

11. **CONTRACT:** The contract between the City and the Contractor shall consist of (1) the Invitation for Bid, including instructions, all terms and conditions, specifications, scopes of work, attachments, price sheet(s) and any amendments thereto, and (2) the Bid submitted by the Contractor in response to the Invitation for Bid (IFB). In the event of a conflict in language

Public Works Department
22500 Salamo Road
West Linn, Oregon 97068
Telephone: (503) 722-5500
Fax: (503) 656-4106

between the IFB and the Bid, the provisions and requirements in the IFB shall govern. However, the City reserves the right to clarify, in writing, any contractual terms with the concurrence of the Contractor, and such written contract shall govern in case of conflict with the applicable requirements stated in the IFB or the Vendor's Bid. The IFB shall govern in all other matters not affected by the written contract. The contract, if awarded, will be made to the lowest, responsive and responsible Bidder offering the lowest unit price base bid. Determination of the lowest responsive, responsible bid is subject to review by the City. Adversely affected or aggrieved bidders shall have seven calendar days after notice of award to submit to the City a written protest of the notice of award. Any written protest must be submitted in accordance with the adopted City Local Contract Review Board Rules.

12. **CONTRACT AMENDMENTS:** This contract may be modified only by a written Contract Amendment signed by persons duly authorized to enter into contracts on behalf of the City and the Contractor.

13. **CONTRACT APPLICABILITY:** The Bidder shall substantially conform to the terms, conditions, specifications and other requirements found within the text of this IFB. All previous agreements, contracts, or other documents, which have been executed between the Bidder and the City are not applicable to this IFB or any resultant contract.

14. **DRUG TESTING PROGRAM:** Pursuant to O.R.S. 279.505 (2) (1), the Contractor awarded the contract shall demonstrate that an employee drug-testing program is in place. The Contractor demonstrates that a drug-testing program is in place by signing of the contact. The drug testing program will apply to all employees and will be maintained for the duration of the Contract awarded. Failure to maintain a program shall constitute a material breach of contract.

15. **RELATIONSHIP TO PARTIES:** It is clearly understood that each party will act in its individual capacity and not as an agent, employee, partner, joint venture, or associate of the other. An employee or agent of one party shall not be deemed or construed to be the employee or agent of the other for any purpose whatsoever. The Contractor is advised that taxes or Social Security payments will not be withheld from any City payments issued hereunder and that the Contractor should make arrangements to directly pay such expenses, if any.

16. **INTERPRETATION-PAROL EVIDENCE:** This contract represents the entire agreement of the Parties with respect to its subject matter, and all previous agreements, whether oral or written, entered into prior to this contract are hereby revoked and superseded by this contract. No representations, warranties, inducements or oral agreements have been made by any of the Parties except as expressly set forth herein, or in any other contemporaneous written agreement executed for the purposes of carrying out the provisions of this contact. This contract may not be changed, modified or rescinded except as provided for herein, absent a written agreement signed by both Parties. Any attempt at oral modification of this contract shall be void and of no effect.

17. **SUBCONTRACTS – ASSIGNMENT & DELEGATION:** Contractor shall submit a list of Subcontractors for approval by the City, and Contractor shall be fully responsible for the acts or omissions of any Subcontractors and of all persons employed by them, and neither the approval by City of any Subcontractor nor anything contained herein shall be deemed to create any contractual relation between the Subcontractor and City.

    This agreement, and all of the covenants and conditions hereof, shall inure to the benefit of and be binding upon the City and the Contractor respectively and their legal representatives. Contractor shall not assign any rights nor delegate any duties incurred by this contract, or any part hereof without the written consent of City, and any assignment or delegation in violation hereof shall be void.

18. **APPROVAL OF SUBSTITIONS:** The materials, products, and equipment described in the Documents and Addenda establish a standard or required function, dimension, appearance, and quality to be met by any proposed substitution. No substitute will be considered unless written request for approval has been received by the City or its representative at least five (5) days prior to the scheduled closing time for receipt of bids. Each such request shall include the name of the material or equipment for which it is to be substituted and a complete description of the proposed substitute including any drawings, cuts, performance, and test data and any other information necessary for evaluation of the substitute. If a substitute is approved, the approval shall be acknowledged in writing. Bidder shall not consider approvals made in any other manner.

Public Works Department
22500 Salamo Road
West Linn, Oregon 97068
Telephone: (503) 722-5500
Fax: (503) 656-4106

19. **RIGHTS AND REMEDIES:** No provision in this document or in the vendor's Bid shall be construed, expressly or by implication, as waiver by the City of any existing or future right and/or remedy available by law in the event of any claim of default or breach of contract. The failure of the City to insist upon the strict performance of any term or condition of the contract or to exercise or delay the exercise of any right or remedy provided in the contract, or by law, or the City's acceptance of and payment for materials or services, shall not release the Contractor from any responsibilities or obligations imposed by this contract or by law, and shall not be deemed a waiver of any right of the City to insist upon the strict performance of the Contract.

20. **INDEMNIFICATION:** Contractor warrants that all its work will be performed in accordance with generally accepted professional practices and standards as well as the requirements of applicable federal, state and local laws, it being understood that acceptance of a contractor's work by City shall not operate as a waiver or release.

    Contractor agrees to indemnify and defend the City, its officers, agents and employees and hold them harmless from any and all liability, causes of action, claims, losses, damages, judgments or other costs or expenses including attorney's fees and witness costs and (at both trial and appeal level, whether or not a trial or appeal ever takes place) that may be asserted by any person or entity which in any way arise from, during or in connection with the performance of the work described in this contract, except liability arising out of the sole negligence of the City and its employees. If any aspect of this indemnity shall be found to be illegal or invalid for any reason whatsoever, such illegality or invalidity shall not affect the validity of the remainder of this indemnification. The amount and type of insurance coverage requirements set forth herein will in no way be construed as limiting the scope of the indemnity in this paragraph.

21. **EARLY TERMINATION:** This agreement may be terminated without cause prior to the expiration of the agreed upon term by mutual written consent of the parties and for the following reasons:

    a. If work under the Contract is suspended by an order of a public agency for any reason considered to be in the public interest other than by a labor dispute or by reason of any third party judicial proceeding relating to the work other than a suit or action filed in regard to a labor dispute; or

    b. If the circumstances or conditions are such that it is impracticable within a reasonable time to proceed with a substantial portion of the Contract.

    Payment of Contractor shall be as provided by ORS 279C.660 and shall be prorated to and include the day of termination and shall be in full satisfaction of all claims by Contractor against City under this Contract. Termination under any provision of this paragraph shall not affect any right, obligation, or liability of Contractor or City which accrued prior to such termination.

22. **CANCELLATION WITH CAUSE:** City may terminate this Contract effective upon delivery of written notice to Contractor, or at such later date as may be established by City, under any of the following conditions:

    a. If City funding from federal, state, local, or other sources is not obtained and continued at levels sufficient to allow for the purchase of the indicated quantity of services. This Contract may be modified to accommodate a reduction in funds,

    b. If Federal or State regulations or guidelines are modified, changed, or interpreted in such a way that the services are no longer allowable or appropriate for purchase under this Contract,

    c. If any license or certificate required by law or regulation to be held by Contractor, its subcontractors, agents, and employees to provide the services required by this Contract is for any reason denied, revoked, or not renewed,

    d. If Contractor becomes insolvent, if voluntary or involuntary petition in bankruptcy is filed by or against Contractor, if a receiver or trustee is appointed for Contractor, or if there is an assignment for the benefit of creditors of Contractor, or

Public Works Department
22500 Salamo Road
West Linn, Oregon 97068
Telephone: (503) 722-5500
Fax: (503) 656-4106

e. If Contractor fails to maintain reasonable relations with the public. Verbal abuse, threats, or other inappropriate behavior towards members of the public constitutes grounds for termination.

Any such termination of this agreement under this section shall be without prejudice to any obligations or liabilities of either party already accrued prior to such termination.

City, by written notice of default (including breach of contract) to Contractor, may terminate the whole or any part of this Contract:

f. If Contractor fails to provide services called for by this Contract within the time specified herein or any extension thereof, or

g. If Contractor fails to perform any of the other provisions of this Contract, or so fails to pursue the work as to endanger performance of this Contract in accordance with its terms, and after receipt of written notice from City, fails to correct such failures within ten (10) days or such other period as City may authorize.

The rights and remedies of City provided in the above clause related to defaults (including breach of contract) by Contractor shall not be exclusive and are in addition to any other rights and remedies provided by law or under this Contract.

If City terminates this Contract per clause f or g above, Contractor shall be entitled to receive as full payment for all services satisfactorily rendered and expenses incurred, an amount which bears the same ratio to the total fees specified in this Contract as the services satisfactorily rendered by Contractor bear to the total services otherwise required to be performed for such total fee; provided, that there shall be deducted from such amount the amount of damages, if any, sustained by City due to breach of contract by Contractor. Damages for breach of contract shall be those allowed by Oregon law, reasonable and necessary attorney fees, and other costs of litigation at trial and upon appeal.

23. **SEVERABILITY:** In the event any provision or portion of this Contract is held to be unenforceable or invalid by any court of competent jurisdiction, the remainder of this Contract shall remain in full force and effect and shall in no way be affected or invalidated thereby.

24. **FORCE MAJEURE:** Neither City nor Contractor shall be considered in default because of any delays in completion of responsibilities hereunder due to causes beyond the control and without fault or negligence on the part of the party so disenabled, including, but not restricted to, an act of God or of a public enemy, volcano, earthquake, fire, flood, epidemic, quarantine, restriction, area-wide strike, freight embargo, unusually severe weather or delay of Subcontractor or suppliers due to such cause; provided that the party so disenabled shall within ten (10) days from the beginning of such delay, notify the other party in writing of the causes of delay and its probable extent. Such notification shall not be the basis for a claim for additional compensation. Each party shall, however, make all reasonable efforts to remove or eliminate such a cause of delay or default and shall, upon cessation of the cause, diligently pursue performance of its obligation under Contract.

25. **RIGHT TO ASSURANCE:** Whenever one party to this contract in good faith has reason to question the other party's intent to perform he may demand that the other party give a written assurance of this intent to perform. In the event that a demand is made and no written assurance is given within five (5) days, the demanding party may treat this failure as an anticipatory repudiation of the Contract.

26. **RIGHT TO ACCESS RECORDS:** City shall have access to such books, documents, papers and records of Contractor and Subcontractors as are directly pertinent to this Contract for the purpose of making audit, examination, excerpts, and transcripts.

27. **WARRANTIES:** All work shall be guaranteed by the Contractor for a period of 18 months after the date of final acceptance of the work by the Owner. Contractor warrants that all practices and procedures, workmanship, and materials shall be the best available unless otherwise specified in the profession. Neither acceptance of the work nor payment therefore shall relieve Contractor from liability under warranties contained in or implied by this contract. Additional warranty requirements may be set forth in the solicitation.

Public Works Department
22500 Salamo Road
West Linn, Oregon 97068
Telephone: (503) 722-5500
Fax: (503) 656-4106

28. **TITLE AND RISK OF LOSS:** The title and risk of loss of material and/or service shall not pass to the City until the City actually receives the material or service at the point of delivery, unless otherwise provided within this Contract.

29. **CONFLICT BETWEEN TERMS:** It is expressly agreed by and between the parties hereto that should there be any conflict between the terms of this instrument and the bid of the Contractor, this instrument shall control and nothing herein shall be considered as an acceptance of the said terms of said bid conflicting herewith.

30. **NONWAIVER:** The failure of the City to insist upon or enforce strict performance by Contractor of any of the terms of this contract or to exercise any rights hereunder shall not be construed as a waiver or relinquishment to any extent of its right to assert or rely upon such terms or rights on any future occasion.

31. **LIENS:** All materials, service or construction shall be free of all liens, and if the City requests, a formal release of all liens shall be delivered to the City.

32. **LICENSES:** Contractor shall have at the time of bid submittal, and shall maintain in current status, all Federal, State and Local licenses and permits required for the operation of the business conducted by the Contractor as applicable to this Contract. The conclusion of the issuing authority in each case is to be deemed conclusive for the purposes of complying with this provision. By submitting a bid for this public contract, you agree that, with respect to the contract, substantial compliance does not meet the minimum requirements of this or any provision hereof, or of any applicable law or other authority, and that strict compliance alone is adequate to meet those requirements, unless the City consents to such substantial compliance in writing at the time of bid submittal. The determination shall be made by the City.

33. **ATTORNEY'S FEES:** In case suit or action is instituted to enforce the provisions of this contract, the parties agree that the losing party shall pay such sum as the Court may adjudge reasonable attorney's fees and court costs including attorney's fees and court costs on appeal.

34. **PUBLIC RECORD:** All Bids submitted in response to this solicitation shall become the property of the City and shall become a matter of public record available for review, subsequent to the award notification, in accordance with the City's Procurement Policy.

35. **WORK IS PROPERTY OF THE CITY:** All work performed by Contractor under this Contract shall be the property of the City.

36. **ADVERTISING:** Contractor shall not advertise or publish information concerning this Contract, without prior written consent of the City.

Public Works Department
22500 Salamo Road
West Linn, Oregon 97068
Telephone: (503) 722-5500
Fax: (503) 656-4106

1. **DEFINITIONS**: The terms, as used in or pertaining to the contract, are defined as follows:

   CITY: The word *"City"* shall refer to the City of West Linn, Oregon.

   CONTRACTOR: The word *"Contractor"* is defined as the person, firm or corporation with whom the contract is made by the City.

   CONTRACT: The word *"Contract"* will include; the Invitation to Bid Notice and Contract, Instructions to Bidders, Bid Form, Bid Guaranty, Performance Bond, Payment Bond, Notice of Award, Notice to Proceed, Change Order, Certificate of Insurance, Certificate of Completion, Contractor's Affidavit Regarding Settlement of Claims, Contractor's Affidavit Certifying Non-Collusion in Bidding, Standard Terms & Conditions, General Terms & Conditions, Special Terms & Conditions, Technical Provisions, Plans and Addenda thereto.

   ENGINEER: The word *"Engineer"* is defined as the person, firm or corporation duly authorized by the City to act as agent in providing professional services including studies, planning, engineering design and construction administration services, inspecting materials and construction, and interpreting plans and specifications.

   MATERIALS: The word *"Materials"* will include, in addition to materials incorporated in the project, equipment and other material used and/or consumed in the performance of the work.

   SUBCONTRACTOR: The word *"Subcontractor"* is defined as those persons or groups of persons having a direct contract with the contractor and those who furnish material worked to a special design according to the plans and/or specifications for this work, and includes those who merely furnish materials not so worked.

   WORK: The word *"Work"* shall include all labor necessary to accomplish the construction required by the Contract and all materials and equipment incorporated or to be incorporated in said construction.

2. **REFERENCE STANDARDS**:

   a. The "2017 Update, City of West Linn Public Works Standard Construction Specifications" which are sponsored and distributed by the City of West Linn Engineering Division, and which are hereinafter referred to as the *"COWL Specifications,"* are hereby adopted as part of these contract documents.
   b. The "2015 Oregon Standard Specifications for Construction" and the latest edition of the "Oregon Standard Drawings and Standard Details" which are sponsored and distributed by the Oregon Department of Transportation (ODOT), and which are hereinafter referred to as the "ODOT Specifications" are hereby adopted as part of these contract documents.
   c. If any contradiction exists between "COWL Specifications" or "ODOT Specifications" and this solicitation document, the solicitation language shall prevail.

3. **LAWS AND REGULATIONS**: The Contractor shall keep himself fully informed of all existing and future City and County ordinances and regulations and state and federal laws and Occupational Safety and Health Standards (OSHA) in any manner affecting the work herein specified. He shall at all times observe and protect and indemnify the City of West Linn, Oregon, and its officers and agents against any claim or liability arising from or based on the violation of any such ordinances, regulations or laws. It is the responsibility of the Contractor to obtain any and all information regarding the laws and regulations which may be referenced in the Specifications.

4. **RIGHTS OF WAY:** The Contractor shall not enter or occupy with workers, tools, equipment or materials any private ground outside the property or easement right of the City of West Linn, without the consent of the owner.

Public Works Department
22500 Salamo Road
West Linn, Oregon 97068
Telephone: (503) 722-5500
Fax: (503) 656-4106

The Contractor, at his own expense, is responsible for the acquisition of any additional easements or rights-of-way that he may desire to complete the work of this contract.

5. **PROPOSAL QUANTITIES**: It is expressly understood and agreed by the parties hereto that the quantities of the various classes of work to be done and the material to be furnished under this Contract, which have been estimated as stated in the Bids, are only approximate and are to be used solely for the purpose of comparing, on a consistent basis, the bids for the work under this Contract. The Contractor further agrees that the City of West Linn will not be held responsible if any of the quantities shall be found incorrect; and the Contractor will not make any claim for damages or for loss of profits because of a difference between the quantities of the various classes of work as estimated and the work actually done. If any error, omission, or misstatement is found to occur in the estimated quantities, the same shall not invalidate this Contract or the whole or any part of the work in accordance with the Specifications and Plans herein mentioned, and for the prices herein agreed upon and fixed therefore, or excuse him from any of the obligations or liabilities hereunder, or entitle him to any damage or compensation except as may be provided in this contract.

6. **PREVAILING WAGE RATE DETERMINATION**: The Contractor shall pay the applicable prevailing wage rates that are in effect at the time the Contract is bid. If the contract price exceeds $50,000 and is not otherwise exempt, workers shall be paid not less than the specified minimum hourly rate of wage in accordance with ORS 279C.838 and ORS 279C.840. Hard copies of the prevailing wage rates publication may be obtained by contacting the Oregon Bureau of Labor and Industries via telephone at: (971) 673-0839. The applicable prevailing wage rates may be accessed via the internet at: http://www.oregon.gov/BOLI/WHD/PWR/pwr_book.shtml. If the Project is subject to the Davis-Bacon Act and the state prevailing rate of wage is higher than the federal prevailing rate of wage, the contractor and every subcontractor on the Project shall pay at least the state prevailing rate of wage as determined under ORS 279C.815.

   The Contractor and all subcontractors must have a public works bond filed with the Oregon Construction Contractors Board before starting work on the Project, unless exempt under ORS 279C.836(4), (7), (8) or (9). If the contractor fails to pay for labor or services, the City can pay and withhold these amounts from payments due the contractor in accordance with ORS 279C.515. Daily, weekly, weekend, and holiday overtime will be paid as required in ORS 279C.540. The Contractor shall provide workers with a written schedule showing the number of hours per day and days per week the employee may be required to work in accordance with ORS 279C.520. Contractor must promptly pay for any medical services they have agreed to pay per ORS 279C.530.

   The City will not receive or consider a bid unless the bid contains a statement by the bidder that the bidder will comply with ORS 279C.838, ORS 279C.840, or 40 U.S.C. 3141. By signing and submitting the Bid, the Contractor agrees to comply with ORS 279C.838 or 279C.840 and/or 40 U.S.C. 3141 et seq. for a public works project subject to the state prevailing wage rates under ORS 279C.800 to 279C.870, the federal prevailing wage rates under the Davis-Bacon Act (40 U.S.C. 3141 et seq.) or both.

   For contracts $50,000 or greater, the City shall pay a fee to the Bureau of Labor and Industries and shall be mailed or otherwise delivered to the Bureau in accordance with Form WH-81 & WH-39.

7. **PAYMENTS TO CONTRACTOR**: City agrees to pay Contractor for performance of those services provided hereunder, which payment shall be based upon the following applicable terms:

   a. Payment: Payment shall be based upon the unit prices bid by the Contractor, as listed in attached bid. Contractor shall prepare and submit each month to the Buyer identified in the Invitation for Bid at the address listed, a statement of services rendered, (indicating the description of each service used in the bid and the dollar amount of each service completed through the stated date), together with a request for payment duly verified by the Contractor's Representative.

      Payment by the City shall release the City from any further obligation for payment to Contractor for services performed or expenses incurred as of the date of the statement of services. Payment of installments shall not be considered

Public Works Department
22500 Salamo Road
West Linn, Oregon 97068
Telephone: (503) 722-5500
Fax: (503) 656-4106

acceptance or approval of any work or waiver of any defects therein. City certifies that sufficient funds are available and authorized for expenditure to finance costs of this contract. Contractor shall include proof of payment to any and all subcontractors and suppliers with each statement submitted to the City. The City shall retain the right to withhold payments if required proof of payment to subcontractor and suppliers is not included with a statement.

b. Timing of Payments: Progress payments, less a five percent retainage as authorized by ORS 279C.555, shall be made to the Contractor within twenty (20) days of the City's receipt of the statement of services.

c. Final Payment: The Contractor shall notify the City in writing when the Contractor considers the project complete, and the City shall, within 15 days after receiving the written notice, either accept the work or notify the Contractor of work yet to be performed on the contract. If accepted by the City, the remaining balance due to the Contractor, including the retained percentage, shall be paid to the Contractor by the City within 30 days after the date of said acceptance.

The City shall pay to the Contractor interest at the rate of one and one-half percent per month on the final payment due the Contractor, to commence 30 days after the work under the Contract has been completed and accepted and to run until the date when final payment is tendered to the Contractor. If the City does not, within 15 days after receiving written notice of completion, notify the Contractor of work yet to be performed to fulfill contractual obligations, the interest provided by this subsection shall commence to run 30 days after the end of the 15-day period.

As a further condition of final acceptance, the City may require the Contractor to submit evidence, satisfactory to the City's Representative, that all payrolls, material bills, and other indebtedness connected with the project have been paid. If any indebtedness or liens are in dispute, the Contractor may submit a surety bond satisfactory to the City guaranteeing payment of all such disputed amounts if such payment has not already been guaranteed by surety bond.

All notices, bills and payments shall be made in writing and may be given by personal delivery or by mail. Notices, bills and payments sent by mail should be addressed to the attention of the Buyer and/or Authorized Bidder at the addresses identified in the Invitation for Bid and shall be deemed given upon deposit in the United States mail, postage paid. In all other instances, notices, bills and payments shall be deemed given at the time of actual delivery. Changes may be made in the names and addresses of the person to whom notices, bills, and payments are to be given by giving written notice pursuant to this paragraph.

8. **LIQUIDATED DAMAGES:** The Contractor agrees that the "Time of Completion" is defined in the Bid and agrees to complete the work by said date. The Contractor and City agree that the City will suffer damages each day the work remains uncompleted after the Time of Completion and that the amounts of those damages are difficult to calculate. Contractor and City agree that a reasonable amount of damages for late completion is **$500 per calendar day** and Contractor agrees to pay such amounts as liquidated damages if the work is not completed by the Time of Completion. Contractor agrees that the liquidated damages specified herein are a fair way of ascertaining damages to the City and are not a penalty for late completion.

9. **STATUS OF CONTRACTOR AS INDEPENDENT CONTRACTOR:** Contractor certifies that:

a. Contractor acknowledges that for all purposes related to this Agreement, Contractor is and shall be deemed to be an Independent Contractor as defined by ORS 670.600 and not an employee of City, shall not be entitled to benefits of any kind to which an employee of City is entitled and shall be solely responsible for all payments and taxes required by law. Furthermore, in the event that Contractor is found by a court of law or any administrative agency to be an employee of City for any purpose, City shall be entitled to offset compensation due, or to demand repayment of any amounts paid to Contractor under the terms of this Agreement, to the full extent of any benefits or other remuneration Contractor receives (from City or third party) as a result of said finding and to the full extent of any payments that City is required to make (to Contractor or to a third party) as a result of said finding.

Public Works Department
22500 Salamo Road
West Linn, Oregon 97068
Telephone: (503) 722-5500
Fax: (503) 656-4106

b. The Contractor hereby represents that no employee of the City, or any partnership or corporation in which a City employee has an interest, has or will receive any remuneration of any description from Contractor, either directly or indirectly, in connection with the letting or performance of this Agreement, except as specifically declared in writing.

c. If payment is to be charged against Federal funds, Contractor certifies that he or she is not currently employed by the Federal Government and the amount charged does not exceed his or her normal charge for the type of service provided.

d. Contractor and its employees, if any, are not active members of the Oregon Public Employees Retirement System and are not employed for a total of 600 hours or more in the calendar year by any public employer participating in the Retirement System.

e. Contractor certifies that it currently has a City business license or will obtain one prior to delivering services under this Agreement.

f. Contractor is not an officer, employee, or agent of the City as those terms are used in ORS 30.265.

10. **CERTIFIED PAYROLL:** The Contractor shall make payment promptly, as due, to all persons supplying to such Contractor labor or material for the performance of the work provided for in this contract. The Contractor will pay all contributions or amounts due the Industrial Accident Fund under the Worker's Compensation Law from such Contractor or Subcontractor incurred in the performance of this contract. The Contractor will pay to the Department of Revenue all sums withheld from employees pursuant to ORS 316.167. The Contractor shall not permit any lien or claim to be filed or prosecuted against the City of West Linn on account of any labor or material furnished.

The Contractor or the Contractor's Surety and every Subcontractor or the Subcontractor's Surety shall file certified statements with the City in writing on a form prescribed by the Commissioner of the Bureau of Labor and Industries, certifying the hourly rate of wage paid each worker which the Contractor or the Subcontractor has employed upon such public work, and further certifying that no worker employed upon such public work has been paid less than the prevailing rate of wage or less that the minimum hourly rate of wage specified in the contract, which certificate and statement shall be verified by the oath of the Contractor or the Contractor's Surety or Subcontractor or the Subcontractor's Surety that the Contractor or Subcontractor has read such statement and certificate and knows the contents thereof and that the same is true to the Contractor's or Subcontractor's knowledge.

a. The certified statements shall set out accurately and completely the payroll records, including the name and address of each worker, the worker's correct classification, rate of pay, daily and weekly number of hours worked, and the gross wages the worker earned during each week identified in the certified statement.

b. Each certified statement required herein shall be delivered or mailed by the Contractor or Subcontractor to the City. A true copy of the certified statements shall also be filed at the same time with the Commissioner of the Bureau of Labor and Industries. Certified statements shall be submitted as set forth in ORS 279C.845.

c. The City shall retain 25 percent of any amount earned by Contractor until the certified statements as required by this section have been filed. City shall pay Contractor the amount retained under this subsection within 14 days after Contractor files the certified statements as required by this section, regardless of whether a subcontractor has failed to file certified statements as required by this section. City is not required to verify the truth of the contents of certified statements filed by Contractor.

The Contractor agrees that if the Contractor fails, neglects or refuses to make prompt payment of any claim for labor or services furnished to the Contractor or a Subcontractor by any person in connection with this contract as such claim becomes due, the proper office of the City of West Linn may pay such claim to the person furnishing the labor or services and charge the amount

Public Works Department
22500 Salamo Road
West Linn, Oregon 97068
Telephone: (503) 722-5500
Fax: (503) 656-4106

of the payment against funds due or to become due to the Contractor by reason of such contract. Payment of a claim in this manner shall not relieve the Contractor or the Contractor's Surety from obligation with respect to any unpaid claims.

Contractor agrees that no person shall be employed for more than ten (10) hours in any one day, or forty (40) hours in any one week, except in cases of necessity, emergency or when public policy absolutely requires it, and in such cases the laborer shall be paid at least time and a half pay for all overtime in excess of eight (8) hours in any one day or forty (40) hours in any one week when the workweek is five consecutive days, Monday through Friday, or ten (10) hours in any one day and or forty (40) hours in any one week when the workweek is four consecutive days, Monday through Friday and for all work performed on Saturday and on any legal holiday as specified in ORS 279C.540.

Contractor agrees to pay promptly as due, to any person, co partnership, association or corporation furnishing medical, surgical, and hospital care or other needed care and attention incident to sickness or injury to the Contractor's employees, of all sums which the Contractor agreed to pay for such services and all money and sums which the Contractor collected or deducted from employee wages pursuant to any law, contract or agreement for the purpose of providing or paying for such service.

11. **PRE-CONSTRUCTION CONFERENCE:** Within 30 days of the issuance of the Notice of Award, the Contractor is required to attend a Pre-construction Conference. The City will contact the Contractor to schedule a specific date, time and location for the Pre-construction conference. The purpose of the meeting is to outline specific construction items and procedures and to address items which require special attention on the part of the Contractor. The Contractor may also present proposed variations in procedures which the Contractor believes may improve constructability of the project, reduce cost, or will reduce inconvenience to the public. Any necessary coordination and procedures for Construction inspection and staking will be addressed during the Pre-construction Conference. The Contractor will be required to provide the following information at the Pre-construction Conference:

    a. Names and emergency telephone numbers of key personnel involved in the project.

    b. Names and telephone numbers of all subcontractors proposed for use on the project.

    c. A construction progress schedule showing the estimated time for start and completion of the major items of work.

    d. A written proposal outlining the intended plans for maintaining continuous access to residences and businesses along the construction site, and traffic control.

    e. An itemized list of all required shop drawings, material and equipment submittals and a schedule indicating the dates each of these items will be transmitted to the City for review.

    Each of the above items is subject to the review and approval by the City.

12. **INSURANCE REQUIREMENTS:** The Contractor, at Contractor's own expense, shall purchase and maintain the herein stipulated minimum insurance with companies licensed to do business in the State of Oregon with policies and forms satisfactory to the City. The City reserves the right to reject all or any insurance carrier(s) with an unacceptable financial rating. All insurance required herein shall be maintained in full force and effect until all work required to be performed under the terms of the Contract is satisfactorily completed and formally accepted; failure to do so may, at the sole direction of the City, constitute a material breach of this Contract. The Contractor's insurance shall be primary insurance, and any insurance or self insurance maintained by the City shall not contribute to it.

    Any failure to comply with the claim reporting provisions of the policies or any breach of an insurance policy warranty shall not affect coverage afforded under the policy to protect the City. The insurance policies shall contain a waiver of transfer

Public Works Department
22500 Salamo Road
West Linn, Oregon 97068
Telephone: (503) 722-5500
Fax: (503) 656-4106

rights of recovery (subrogation) against the City, its agents, representatives, directors, officers, and employees for any claims arising out of the Contractor's work or service.

The City reserves the right to request and to receive, within 10 working days, certified copies of any or all of the herein required insurance policies and/or endorsements. The City shall not be obligated, however, to review same or to advise Contractor of any deficiencies in such policies and endorsements, and such receipt shall not relieve Contractor from, or be deemed a waiver of the City's right to insist on, strict fulfillment of Contractor's obligations under this Contract.

The insurance policies required by this Contract shall name the City, its agents, representatives, officers, directors, officials and employees as Additional Insured with respect to this contract. All Liability Insurance policies will be endorsed to show this additional coverage. A cross-liability clause or separation of insured clause will be included in general liability policy.

The policy or policies of insurance maintained by the Contractor and its subcontractors shall provide at least the following limits and coverage:

a. Commercial General Liability Insurance: Includes all liability including all major divisions of coverage, but not limited to, Premises/Operations, Completed Operations, Independent Contractors' Protective, Products-Completed Operations, Contractual Liability (including coverage for the Contractor's indemnity obligations and other contractual indemnity obligations assumed by the Contractor), Personal Injury, and Broad Form Property Damage (including coverage for Explosion, Collapse, and Underground Hazards). The following insurance will be carried:

   Employer's Liability Insurance
   $ 2,000,000.00 Each Occurrence
   $ 2,000,000.00 Disease Each Employee
   $ 2,000,000.00 Disease – Policy

   Commercial General Liability insurance
   $ 2,000,000.00 Each Occurrence Limit
   $ 3,000,000.00 General Aggregate
   $ 3,000,000.00 Products/Completed Operations Aggregate
   $ 3,000,000.00 Personal and Advertising Injury
   $ 2,000,000.00 Limited Job Site Pollution Occurrence Sub-Limit

   Comprehensive Automobile Liability Insurance including coverage for all owned, hired and non-owned vehicles
   $ 2,000,000.00 Each Occurrence Combined Single Limit
   $ 3,000,000.00 Aggregate Bodily Injury & Property Damage
   or
   $ 2,000,000.00 Each Person Bodily Injury
   $ 2,000,000.00 Each Occurrence Bodily Injury
   $ 2,000,000.00 Each Occurrence Property Damage
   $ 2,000,000.00 Each Occurrence Pollution Occurrence Sub-Limit

b. "All risk" Builder's Risk Insurance (including earthquake and flood) covering the real and personal property of others in the care, custody, and control of the contractor, if applicable. Coverage shall include theft and damage to building interiors, exterior, in transit and offsite storage. The minimum amount of coverage to be carried shall be equal to the full amount of the contract.

The policy shall be endorsed to have the General Aggregate apply to this Project Only.

The insurance policies may provide coverage which contains deductibles or self-insured retentions. Such deductible and/or self insured retentions shall not be applicable with respect to the coverage provided to the City under such policies. The

Public Works Department
22500 Salamo Road
West Linn, Oregon 97068
Telephone: (503) 722-5500
Fax: (503) 656-4106

Contractor shall be solely responsible for deductible and/or self insured retention and the City, at its option, may require the Contractor to secure the payment of such deductible or self-insured retentions by a surety bond or an irrevocable and unconditional letter of credit.

Certificates of Insurance: Prior to commencing Services under this Contract, Contractor shall furnish the City with Certificates of Insurance, or formal endorsements as required by the Contract, issued by Contractor's insurer(s), as evidence that policies providing the required coverage, conditions and limits required by this Contract are in full force and effect. Certificates of Insurance should read "Insurance certificate pertaining to (this contract). The City of West Linn, its officers, directors and employees shall be added as additional insured with respects to this contract. Insured coverage is primary" in the description portion of the certificate.

If a policy does expire during the life of the contract, a renewal certificate must be sent to the City ten (10) days prior to the expiration date. Insurance required herein shall not expire, be canceled, or materially changed without thirty (30) days prior written notice to the City. The procuring of such required insurance shall not be construed to limit contractor's liability hereunder. Notwithstanding said insurance, Contractor shall be obligated for the total amount of any damage, injury, or loss caused by negligence or neglect connected with this Contract.

13. **PERFORMANCE BOND:** The contractor shall be required to furnish non-revocable security binding the contractor to provide faithful performance of the contract in the amount of 100% of the total contract price payable to the City of West Linn.

    Performance security shall be in the form of a performance bond, certified check or cashier's check. This security must be in the possession of the City within the time specified or ten (10) days after notice of award if no period is specified. If the contractor fails to execute the security document as required, the contractor may be found in default and the contract terminated by the City. In case of default the City reserves all rights.

    All performance bonds shall be executed on the Performance Bond form included in the Bid Document, duly executed by the Bidder as Principal and having as Surety thereon a Surety company approved by the owner and holding a Certificate of Authority to transact surety business in the State of Oregon, by the Oregon Department of Insurance. Individual sureties are unacceptable. All Insurers and Sureties shall have at the time of submission of the proposal an A.M. Best's Key Rating Guide of "A-" or better as currently listed in the most recent Best Key Guide, published by the A.M. Best Company, payable without condition to the Owner.

14. **PAYMENT BOND:** The contractor shall be required to furnish non-revocable security for the protection of all persons supplying labor and material to the contractor or any subcontractor for the performance of any work related to the contract. Payment security shall be in the amount of 100% of the total contract price and be payable to the City of West Linn. Payment security shall be in the form of a payment bond, certified check or cashier's check.

    All payment bonds shall be executed on the Payment Bond form included in the Bid Document, duly executed by the Bidder as Principal and having as Surety thereon a Surety company approved by the owner and holding a Certificate of Authority to transact surety business in the State of Oregon, by the Oregon Department of Insurance. Individual sureties are unacceptable. All Insurers and Sureties shall have at the time of submission of the proposal and A.M. Best's Key Rating Guide of "A-" or better as currently listed in the most recent Best Key Guide, published by the A.M. Best Company, payable without condition to the Owner.

15. **NOTICE TO PROCEED**: Within 45 days of the issuance of the Notice of Award the City may issue a written Notice to Proceed. The Notice to Proceed shall stipulate the actual contract start date, the contract duration and the contract completion date. The time required for the Contractor to obtain permits, licenses and easements shall be included in the contract duration and shall not be justification for a delay claim by the Contractor. The time required for the Contractor to prepare, transmit and obtain approval of applicable submittals shall be included in the contract duration and shall not be justification for a delay claim by the Contractor.

Public Works Department
22500 Salamo Road
West Linn, Oregon 97068
Telephone: (503) 722-5500
Fax: (503) 656-4106

No work shall be started until after all required permits, licenses, and easements have been obtained.

No work shall be started until all applicable submittals have been submitted and returned approved by the City's Representative.

16. **PROTECTION OF FINISHED OR PARTIALLY FINISHED WORK**: The Contractor shall properly guard and protect all finished or partially finished work, and shall be responsible for the same until the entire contract is completed and accepted by the City Engineer. The Contractor shall turn over the entire work in full accordance with these Specifications before final settlement shall be made.

17. **CHANGE ORDERS**: The City may at any time, and without notice, issue a written Change Order requiring additional work within the general scope of this Contract, or any amendment thereto, or directing the omission of or variation in work. If such Change Order results in a material change in the amount or character of the work, an equitable adjustment in the Contract price and other provisions of this Contract as may be affected may be made. Any claim by Contractor for an adjustment under this section shall be asserted in writing within thirty (30) days from the date of receipt by Contractor of the notification of change or the claim will not be allowed. Whether made pursuant to this section or by mutual agreement, no change shall be binding upon City until a Change Order is executed by the Authorized Representative of City, which expressly states that it constitutes a Change Order to this Contract. The issuance of information, advice, approvals, or instructions by City's Representative or other City personnel shall not constitute an authorized change pursuant to this section. Nothing contained in this section shall excuse the Contractor from proceeding with the prosecution of the work in accordance with the Contract, as changed.

18. **STOCKPILE OF MATERIALS**: The Contractor may, if approved by the City Engineer, place or stockpile materials in the public right-of-way provided they **do not** prevent access to adjacent properties or prevent compliance with traffic regulations. Traffic shall not be required to travel over stockpiled materials, and proper dust control shall be maintained.

19. **EXCESS MATERIALS**: When excavations are made, resultant loose earth shall be utilized for filling by compacting in place or disposed of off the site. Excess or unsuitable material, broken asphaltic concrete and broken portland cement concrete excavated from the right-of-way shall be removed from the project and disposed of by the Contractor.

    Waste material shall not be placed on private property without express permission of the property owner.

    The Contractor shall at all times keep the premises free from accumulation of waste materials or rubbish caused by his operations. At the completion of the work, he shall remove all equipment, tools and surplus materials, and shall completely clean the premises, removing and disposing of all debris and rubbish, and cleaning all stains, spots, marks, dirt, smears, etc. When work premises are turned over to the City, they shall be thoroughly clean and ready for immediate use.

    Clean-up shall include removal of all excess pointing mortar materials within pipes and removal of oversized rocks and boulders left after finish grading. The Contractor shall provide for the legal disposal of all waste products debris, etc., and shall make necessary arrangements for such disposal.

20. **ENVIRONMENTAL POLLUTION**: As provided by ORS 279C.525, all applicable provisions of federal, state or local statutes, ordinances and regulations dealing with the prevention of environmental pollution and the preservation of natural resources that affect the work under this contract are by reference incorporated herein to the same force and affect as if set forth herein in full. If the Contractor must undertake additional work due to the enactment of new or the amendment of existing statutes, ordinances or regulations occurring after the submission of the successful bid, the City shall issue a Change Order setting forth the additional work that must be undertaken. The Change Order shall not invalidate the Contract and there shall be, in addition to a reasonable extension, if necessary, of the contract time, a reasonable adjustment in the contract price,

Public Works Department
22500 Salamo Road
West Linn, Oregon 97068
Telephone: (503) 722-5500
Fax: (503) 656-4106

if necessary, to compensate the Contractor for all costs and expenses incurred, including overhead and profits, as a result of the delay or additional work.

21. **SALVAGE, COMPOSTING OR MULCHING**: If this is a contract for demolition work, the Contractor shall salvage or recycle construction and demolition debris, if feasible and cost-effective. If this is a contract for lawn and landscape maintenance, Contractor shall compost or mulch yard waste material at an approved site, if feasible and cost-effective.

22. **LOSSES AND DAMAGES**: All loss or damage arising out of the nature of the work to be done or from the action of the elements or from any unforeseen circumstances in the prosecution of the same, or from any unusual obstructions or difficulties which may be encountered in and/or during the prosecution of the work, or from any casualty whatsoever of every description, shall be sustained and borne by the Contractor at his own cost and expense.

23. **CHARACTER AND STATUS OF WORKMEN**: Only skilled foremen and workmen shall be employed on work requiring special qualifications. When required by the City, the Contractor shall discharge any person who is, in the opinion of the City Engineer, disorderly, dangerous, insubordinate, incompetent, or otherwise objectionable. The Contractor shall keep the City harmless from damages or claims for compensation that may occur in the enforcement of this section.

24. **WORK METHODS:** The methods, equipment and appliances used on the work shall be such as will produce a satisfactory quality of work, and shall be adequate to complete the contract within the time limit specified.

    Except as is otherwise specified, the Contractor's procedure and methods of construction may, in general, be of his own choosing, provided they follow best general practice and are calculated to secure results which will satisfy the requirements of the specifications and the supervision of the work.

    The work covered by this Contract shall be carefully laid out in advance and performed in a manner to minimize interference with normal operation and utilization of the roads. The Contractor shall exercise caution during the course of this construction work to avoid damage to all known existing or possible unknown existing underground utilities. He shall conduct his construction operations in such a manner as to avoid injury to his personnel and to avoid damage to all utilities. Any damage done will be repaired without delay and at the expense of the Contractor.

25. **INSPECTION:** All material and/or services are subject to inspection and acceptance by the City. Materials and/or services failing to conform to the specifications of this Contract will be held at Contractor's risk and may be returned to the Contractor. If so returned, all costs are the responsibility of the Contractor. The City may elect to do any or all of the following per written determination:

    a. Waive the non-conformance.

    b. Stop the work immediately.

    c. Bring material into compliance.

26. **TRAFFIC REGULATIONS**: All traffic affected by this construction shall be regulated in accordance with the *Oregon Temporary Traffic Control Handbook*, latest edition, as prepared by the Oregon Department of Transportation and any questions shall be referred to the City of West Linn City Engineer for interpretation.

    At the time of the pre-construction conference, the Contractor shall designate an employee who is well qualified and experienced in construction traffic control and safety to be responsible for implementing, monitoring and altering traffic control measure, as necessary. At the same time the City will designate a representative who will be responsible to see that all traffic control and any alterations are implemented and monitored to the extent that traffic is carried through the work area in an effective manner and that motorists, pedestrians, bicyclists and workers are protected from hazard and accidents.

Public Works Department
22500 Salamo Road
West Linn, Oregon 97068
Telephone: (503) 722-5500
Fax: (503) 656-4106

a. All traffic control devices required for this project shall be the responsibility of the Contractor. The Contractor shall place advance warnings signs in accordance with the Traffic Control Handbook.

b. The Contractor shall provide, erect and maintain all necessary flashing arrow boards, barricades, suitable and sufficient warning lights, signals and signs, and shall take all necessary precautions for the protection of the work and safety of the public. The Contractor shall provide, erect and maintain acceptable and adequate detour signs at all closures and along detour routes.

c. All barricades and obstructions shall be illuminated at night, and all safety lights shall be kept burning from sunset until sunrise. All barricades and signs used by the Contractor shall conform to the standard design, generally accepted for such purposes, and payment for all such services and materials shall be considered as included in the other pay items of the Contract unless specifically listed and identified.

d. The Contractor shall insure that all existing traffic signs are erect, clean and in full view of the intended traffic at all times. Street name signs at major street intersections shall be maintained erect at all times. If these signs should interfere with construction, the Contractor shall notify the Inspector at least forty eight (48) hours in advance for City personnel to temporarily relocate said signs. The City will re-set all traffic and street name signs to permanent locations when notified by the Contractor that construction is complete unless otherwise stated in the specifications.

e. When construction activities or traffic hazards at the construction site require the use of flagmen, it shall be the Contractor's responsibility to provide adequate personnel including flagmen to direct traffic safely.

f. Equipment used and/or directed by the Contractor shall travel with traffic at all times. Supply trucks shall travel with traffic except when being spotted. Provide a flagman to assist with this operation.

g. During construction, it may be necessary to alter traffic control. Alterations shall be in accordance with the Traffic Control Handbook.

h. **NO STREET WITHIN THIS PROJECT MAY BE CLOSED TO THROUGH TRAFFIC OR TO LOCAL EMERGENCY TRAFFIC WITHOUT THE PRIOR WRITTEN APPROVAL OF THE CITY ENGINEER PER DIRECTION OF THE CITY MANAGER OF THE CITY OF WEST LINN.** Written approval may be given if sufficient time exists to allow for notification of the public at least two (2) days in advance of such closing. Partial closure of streets within the project shall be done in strict conformity with written directions to be obtained from the City Engineer.

i. The Contractor shall address how local access to adjacent properties will be handled in accordance with the specification herein.

j. Where crossings of existing pavements occur, no open trenches shall be permitted overnight, but plating may be permitted if conditions allow as determined by the City Engineer or his authorized representative. If plates cannot be used, crossings shall be appropriately back-filled to provide a safe smooth travelling surface.

27. **OUTDOOR CONSTRUCTION RESTRICTIONS:** Outdoor construction is restricted to the times listed below in the following table:

	Weekdays (Mon.-Fri.)	**Weekends (Sat.-Sun), Holidays**
All Outdoor Construction Work	7:00 a.m. to 6:00 p.m.	9:00 a.m. to 6:00 p.m.

Holidays include: New Year's Day, Martin Luther King Jr. Birthday, Washington's Birthday/President's Day, Memorial Day, Independence Day, Labor Day, Columbus Day, Veterans Day, Thanksgiving Day, and Christmas Day.

Public Works Department
22500 Salamo Road
West Linn, Oregon 97068
Telephone: (503) 722-5500
Fax: (503) 656-4106

28. **FIRST TIER SUBCONTRACTOR DISCLOSURE:** If a Bid for the Project is greater than $100,000, within two working hours of the date and time the Bids are due, the Bidder must submit a written disclosure for all First Tier Subcontractors furnishing labor or labor and materials whose subcontracts are equal to or greater in value than 5% of the total Project Bid or $15,000, whichever is greater, or $350,000 regardless of the percentage of the total project bid in accordance with ORS 279C.370. The Bidder must disclose the following information about their first-tier subcontracts either in its Bid submission or within two (2) working hours after the date and time of the deadline when bids are due:

    a. The subcontractor's name, address, Construction Contractor's Board Number (as applicable), and

    b. The dollar value of the subcontract, and

    c. The category of work that the subcontractor will be performing.

    If the bidder will not be using any subcontractors that are subject to the above disclosure requirements, the bidder is required to indicate "NONE" on the accompanying form. Failure to submit this form by the disclosure deadline will result in a non-responsive bid. A non-responsive bid will not be considered for award. It is the Bidder's responsibility to determine all the documents are must be submitted to the City.

29. **USE OF EQUALS:** When the specifications for materials, articles, products, and equipment state "or equal", Contractor may bid upon, and use materials, articles, products, and equipment which will perform equally the duties imposed by the general design. The Engineer will have the final approval of all materials, articles, products, and equipment proposed to be used as an "equal." It shall not be purchased or installed without prior written approval from the City or its representative.

30. **HAZARDOUS MATERIALS**: The Contractor shall supply the City with a list of any and all hazardous substances used in performance of this Contract. That list shall identify the location of storage and use of all such hazardous substances and identify the amounts stored and used at each location. Contractor shall provide City with material safety data sheets for all hazardous substances brought onto City property, created on City property or delivered to City pursuant to this Contract. For the purpose of this section, "hazardous substance" means hazardous substance as defined by ORS 453.307(5). Contractor shall complete the State Fire Marshall's hazardous substance survey as required by ORS 453.317 and shall assist City to complete any such survey that it may be required to complete because of substances used in the performance of this Contract.

31. **HAZARDOUS WASTE**: If, as a result of performance of this Contract, Contractor generates any hazardous wastes, Contractor shall be responsible for disposal of any such hazardous wastes in compliance with all applicable federal and state requirements. Contractors shall provide City with documentation, including all required manifests, demonstrating proper transportation and disposal of any such hazardous wastes. Contractor shall defend, indemnify, and hold harmless City for any disposal or storage of hazardous wastes generated pursuant to this Contract and any releases or discharges of hazardous materials.

32. **TEMPORARY SANITARY FACILITIES**: The Contractor shall provide facilities for the use of workmen employed on the work site in accordance with the requirements of ORS 654.150, (Sanitary facilities at construction projects; standards, exemptions) and the rules adopted pursuant thereto. Whether or not ORS 654.150 is applicable to the project is the sole responsibility of the Contractor. Contractor shall be responsible for all costs that may be incurred in complying with or in securing exemption or partial exemption from the requirements as incidental to this contract.

33. **ELECTRIC POWER, WATER AND TELEPHONE**: Unless otherwise specified, the Contractor shall make his own arrangements for electric power, water and telephone. Subject to the convenience of the utility, he may be permitted to connect to existing facilities where available, but he shall meter and bear the cost of such power or water, and installation and disconnect of such power, water and telephone services.

Public Works Department
22500 Salamo Road
West Linn, Oregon 97068
Telephone: (503) 722-5500
Fax: (503) 656-4106

34. **UTILITIES AND ELECTRICAL POWER LINES**: The electric utility company may maintain energized aerial electrical power lines in the immediate vicinity of this project. Do not consider these lines to be insulated. Construction personnel working in proximity to these lines are exposed to an extreme hazard from electrical shock. Contractors, their employees and all other construction personnel working on this project must be warned of the danger and instructed to take adequate protective measure, including maintaining a minimum ten (10) feet clearance between the lines and all construction equipment and personnel. (see: OSHA Std. 1926.550 (a) 15).

    Electrical utility companies may maintain energized underground electrical power lines in the immediate vicinity of this project. These power lines represent an extreme hazard of electrical shock to any construction personnel or equipment coming in contact with them. Contractors, their employees, and all other personnel working near any underground power lines must be warned to take adequate protective measure. (see: OSHA Std. 1926-651 (A)).

    Oregon law requires all parties planning excavations in public rights-of-way to contact utilities for locations of their underground facilities in accordance with the rules adopted by the Oregon Utility Notification Center. Those rules are set forth in OAR 952-001-0010 through OAR 952-001-0090. You may obtain copies of the rules by calling the center at (503) 232-1987.

35. **COOPERATIVE PURCHASING**: Any publicly funded city, county, district, agency or similar entity shall have the authority to purchase specified goods/services directly from the contractor under the terms and conditions of this contract as indicated below:

    a. The bidder agrees to extend identical pricing to local public agencies for the same terms. Quantities listed in this document reflect the City of West Linn's estimated usage only.

    b. Each contracting agency will execute a separate contract with the successful bidder for its requirements.

    c. Any bidder, by written notification at the time of the bid due date and time, may decline to extend the prices and terms of this bid to any, and/or all other public agencies.

    d. Additional costs may be incurred by the successful bidder in contracting with another public agency. All demonstrable costs (shipping, etc.) may be passed on to that public agency.

    Contractor shall provide information regarding total usage of contract upon request of the City of West Linn.

City of West Linn	**SPECIAL TERMS AND CONDITIONS** Solicitation Number: PW-18-01	**Public Works Department** 22500 Salamo Road West Linn, Oregon 97068 Telephone: (503) 722-5500 Fax: (503) 656-4106

Purpose: The City of West Linn intends to establish a contract for the **South Fork 24-Inch Pipe Restraint Project.** For the Technical Special Provisions of this contract see Appendix B.

1. **Prospective Bidders Conference:** Prospective bidders are not required to attend a conference to be held at the City of West Linn City Hall:

   ADDRESS: 22500 Salamo Road
   West Linn, Oregon 97068
   Bolton Conference Room

   DATE/TIME: AS INDICATED ON THE INVITATION FOR BID

   The purpose of this conference will be to clarify the contents of this Invitation For Bid in order to prevent any misunderstanding of the City's position. Any doubt as to the requirements of this Invitation For Bid or any apparent omission or discrepancy should be presented to the City at this conference. The City will then determine the appropriate action necessary, if any, and issue a written addendum to the Invitation For Bid. Oral statements or instructions shall not constitute an amendment to the Invitation For Bid.

2. **Bid Acceptance Period:** In order to allow for an adequate evaluation, the City requires a Bid in response to this Solicitation to be valid and irrevocable for sixty (60) days after the opening time and date.

3. **Time of Completion:** The Contractor shall commence work for this project on or before the fifth (5) day following the project start date indicated on the "Notice to Proceed" issued by the City of West Linn and shall fully complete all work under the project within the "Time of Completion" stated on the "Notice of Invitation to Bid and Contract." The Contractor shall, at all times, during the continuance of the Contract, prosecute the work with such force and equipment as is sufficient to complete all work within the time specified.

4. **Plans and Specifications to Successful Bidder:** The successful Bidder may obtain five (5) sets of Plans and Specifications for this project from the City at no cost.

5. **City of West Linn Permit:** As a City project, the Contractor is not required to obtain a City Public Works Construction, Improvement, Blasting, or Erosion Control permit. The Contractor will be responsible for any other required agency permits

6. **Key Personnel:** It is essential that the Contractor provide adequate experienced personnel, capable of and devoted to the successful accomplishment of work to be performed under this contract. The Contractor must agree to assign specific individuals to the key positions.

   a. The Contractor agrees that, once assigned to work under this contract, key personnel shall not be removed or replaced without written notice to the City.

   b. If key personnel are not available for work under this contract for a continuous period exceeding 30 calendar days, or are expected to devote substantially less effort to the work than initially anticipated, the Contractor shall

Public Works Department
22500 Salamo Road
West Linn, Oregon 97068
Telephone: (503) 722-5500
Fax: (503) 656-4106

immediately notify the City, and shall, subject to the concurrence of the City, replace such personnel with personnel of substantially equal ability and qualifications.

7. **Technical Special Provisions**: The *COWL Specifications and 2015 ODOT Standard Specifications* are the adopted REFERENCE STANDARDS for all Schedules of work for this project and shall apply except as modified by the Technical Special Provisions included as Appendix B.

Public Works Department
22500 Salamo Road
West Linn, Oregon 97068
Telephone: (503) 722-5500
Fax: (503) 656-4106

Appendix A

FORMS

City of West Linn	**BID FORM** Solicitation Number: PW-18-01	**Public Works Department** 22500 Salamo Road West Linn, Oregon 97068 Telephone: (503) 722-5500 Fax: (503) 656-4106

ITEM	DESCRIPTION	QUANTITY	UNIT	UNIT PRICE	ITEM COST
1	MOBILIZATION, DEMOBILIZATION, BONDS AND INSURANCE	1	LS		
2	TEMPORARY WORK ZONE TRAFFIC CONTROL, COMPLETE	1	LS		
3	CUT-IN VALVE RECONNECTION	2	EA		
4	CCTV PIPELINE JOINT INSPECTION	1	LS		
5	EXISTING JOINT RESTRAINT – REINFORCING ROD	4	EA		
6	EXISTING JOINT RESTRAINT – BUTT STRAP	8	EA		
7	HYDROSTATIC TESTING, FLUSHING AND DISINFECTION OF WATER TRANSMISSION MAIN	1	LS		
8	EXPLORATORY EXCAVATION FOR ANCHOR BLOCK	1	LS		
9	REINFORCED CONCRETE ANCHOR BLOCK	1	LS		
10	ROCK REMOVAL	5	YD		
11	GENERAL SURFACE RESTORATION	1	LS		
				TOTAL BID =	

City of West Linn	**BID BOND** Solicitation Number: PW-18-01	**Public Works Department** 22500 Salamo Road West Linn, Oregon 97068 Telephone: (503) 722-5500 Fax: (503) 656-4106

KNOW ALL PERSONS BY THESE PRESENTS:

That we, _____, as "Principal,"
(Name of Principal)

and _____, an _____ Corporation,
(Name of Surety)
authorized to transact Surety business in Oregon, as "Surety," hereby jointly and severally bind ourselves, our respective heirs, executors, administrators, successors and assigns to pay unto the City of West Linn ("Obligee") the sum of ($_____) _____ dollars.

WHEREAS, the condition of the obligation of this bond is that Principal has submitted its proposal or bid to an agency of the Obligee in response to Obligee's procurement document for the project identified in the Solicitation Number indicated above which proposal or bid is made a part of this bond by reference, and Principal is required to furnish bid security in an amount equal to ten (10%) percent of the total amount of the bid pursuant to the procurement document and ORS 279C.365(4) for competitive bidding or 279C.400(5) for competitive proposals.

NOW, THEREFORE, if the proposal or bid submitted by Principal is accepted, and if a contract pursuant to the proposal or bid is awarded to Principal, and if Principal enters into and executes such contract within the time specified in the procurement document and executes and delivers to Obligee its good and sufficient performance and payment bonds required by Obligee, as well as any required proof of insurance, within the time fixed by Obligee, then this obligation shall be void; otherwise, it shall remain in full force and effect.

IN WITNESS WHEREOF, we have caused this instrument to be executed and sealed by our duly authorized legal representatives this _____day of _____, 20__.

PRINCIPAL: _____

By_____
Signature

_____
Official Capacity

Attest: _____
Corporation Secretary

SURETY: _____

BY ATTORNEY-IN-FACT:

_____
Name

_____
Signature

_____
Address

_____
City State Zip

_____ _____
Phone Fax

City of West Linn	**NONCOLLUSION AFFIDAVIT**	**Public Works Department** 22500 Salamo Road West Linn, Oregon 97068 Telephone: (503) 722-5500 Fax: (503) 656-4106
	Solicitation Number: PW-18-01	

NONCOLLUSION AFFIDAVIT

I, (Type/Print Name)_____**,** state that I am **(Position Title)** _____of **(Name of Firm)**_____ and that I am authorized to make this affidavit on behalf of my firm, and its owners, directors, and, officers. I am the person responsible in my firm for the price(s) and the amount of this bid.

I state that:

1. The price(s) and the amount of this bid have been arrived at independently and without consultation, communication or agreement with any other contractor, bidder or potential bidder.

2. Neither the price(s) nor the amount of this bid, and neither the approximate price(s) nor approximate amount of this bid, have been disclosed to any other firm or person who is a bidder or potential bidder, and they will not be disclosed before bid opening.

3. No attempt has been made or will be made to induce any firm or person to refrain from bidding on this contract, or to submit a bid higher than this bid, or to submit any intentionally high or noncompetitive bid or other form of complementary bid.

4. The bid of my firm is made in good faith and not pursuant to any agreement or discussion with, or inducement from, any firm or person to submit a complementary or other noncompetitive bid.

5. **(Name of Firm)**_____**,** its affiliates, subsidiaries, officers, directors, and employees are not currently under investigation by any governmental agency and have not in the last four (4) years been convicted or found liable for any act prohibited by state or federal law in any jurisdiction, involving conspiracy or collusion with respect to bidding on any public contract, except as follows:

I state that **(Name of Firm)**_____ understands and acknowledges that the above representations are material and important, and will be relied on by **THE CITY OF WEST LINN, OREGON** in awarding the contract(s) for which this bid is submitted. I understand and my firm understands that any misstatement in this affidavit is and shall be treated as fraudulent concealment from **THE CITY OF WEST LINN, OREGON** of the true facts relating to the submission of bids for this contract.

_____
(Signature) (Signatory's Name)

_____
(Signatory's Title)

STATE OF _____)
)§
COUNTY OF _____)

SWORN TO AND SUBSCRIBED BEFORE ME THIS _____DAY OF _____**, 20**____

_____
Notary Public

My Commission Expires _____

City of West Linn	**EXPERIENCE RECORD** Solicitation Number: PW-18-01	**Public Works Department** 22500 Salamo Road West Linn, Oregon 97068 Telephone: (503) 722-5500 Fax: (503) 656-4106

THREE YEAR EXPERIENCE RECORD

Recent projects first

#1 (Project Name, Location, Contract Cost)

_____

Project description: _____

_____

_____

Project completion date: (contract) _____ (actual) _____

Contact name: _____

Telephone: _____

#2 (Project Name, Location, Contract Cost)

_____

Project description: _____

_____

_____

Project completion date: (contract) _____ (actual) _____

Contact name: _____

Telephone: _____

#3 (Project Name, Location, Contract Cost)

_____

Project description: _____

_____

_____

City of West Linn	**EXPERIENCE RECORD** Solicitation Number: PW-18-01	**Public Works Department** 22500 Salamo Road West Linn, Oregon 97068 Telephone: (503) 722-5500 Fax: (503) 656-4106

Project completion date: (contract) _____ (actual) _____

Contact name: _____

Telephone: _____

#4 (Project Name, Location, Contract Cost)

_____

Project description: _____

_____

_____

Project completion date: (contract) _____ (actual) _____

Contact name: _____

Telephone: _____

#5 (Project Name, Location, Contract Cost)

_____

Project description: _____

_____

_____

Project completion date: (contract) _____ (actual) _____

Contact name: _____

Telephone: _____

Attach additional sheets if needed.

FIRST-TIER SUBCONTRACTOR DISCLOSURE

PROJECT NAME: _____

BID #: _____

BID CLOSING: Date: _____Time:_____

This form must be submitted at the location specified in the Invitation to Bid on the advertised bid closing date and within two working hours after the advertised bid closing time.

List below the name of each subcontractor that will be furnishing labor or will be furnishing labor and materials and that is required to be disclosed, the category of work that the subcontractor will be performing and the dollar value of the subcontract. Enter "NONE" if there are no subcontractors that need to be disclosed. (ATTACH ADDITIONAL SHEETS IF NEEDED.)

NAME	DOLLAR VALUE	CATEGORY OF WORK
(1) _____	$ _____	_____
(2) _____	$ _____	_____
(3) _____	$ _____	_____
(4) _____	$ _____	_____
(5) _____	$ _____	_____
(6) _____	$ _____	_____
(7) _____	$ _____	_____
(8) _____	$ _____	_____
(9) _____	$ _____	_____

Failure to submit this form by the disclosure deadline will result in a non-responsive bid. A non-responsive bid will not be considered for award.

Form submitted by (bidder name):_____

Contact name: Phone no.: ( )

ORS 279C.370 First-tier subcontractor disclosure. (1)(a) Within two working hours after the date and time of the deadline when bids are due to a contracting agency for a public improvement contract, a bidder shall submit to the contracting agency a disclosure of the first-tier subcontractors that:

(A) Will be furnishing labor or will be furnishing labor and materials in connection with the public improvement contract; and

(B) Will have a contract value that is equal to or greater than five percent of the total project bid or $15,000, whichever is greater, or $350,000 regardless of the percentage of the total project bid.

(b) For each contract to which this subsection applies, the contracting agency shall designate a deadline for submission of bids that has a date on a Tuesday, Wednesday or Thursday and a time between 2 p.m. and 5 p.m., except that this paragraph does not apply to public contracts for maintenance or construction of highways, bridges or other transportation facilities.

(c) This subsection applies only to public improvement contracts **("projects")** with a value, estimated by the contracting agency, of more than **$100,000**.

(d) This subsection does not apply to public improvement contracts that have been exempted from competitive bidding requirements under ORS 279C.335 (2).

(2) The disclosure of first-tier subcontractors under subsection (1) of this section must include the name of each subcontractor, the category of work that each subcontractor will perform and the dollar value of each subcontract. The information shall be disclosed in substantially the following [above] form:

(3) A contracting agency shall accept the subcontractor disclosure. The contracting agency shall consider the bid of any contractor that does not submit a subcontractor disclosure to the contracting agency to be a non-responsive bid and may not award the contract to the contractor. A contracting agency is not required to determine the accuracy or the completeness of the subcontractor disclosure.

(4) After the bids are opened, the subcontractor disclosures must be made available for public inspection.

(5) A contractor may substitute a first-tier subcontractor under the provisions of ORS 279C.585.

(6) A subcontractor may file a complaint under ORS 279C.590 based on the disclosure requirements of subsection (1) of this section.

WH-179 (08-10-10)

City of West Linn	**AFFIDAVIT** Solicitation Number: PW-18-01	**Public Works Department** 22500 Salamo Road West Linn, Oregon 97068 Telephone: (503) 722-5500 Fax: (503) 656-4106

AFFIDAVIT OF COMPLIANCE WITH TAX LAWS

_____ ("Affiant"), being first duly sworn under oath and representing

_____[insert Bidder/Proposer Name] ("Bidder"), deposes and swears or

affirms under penalty of perjury that:

1. I am an employee of Bidder, I have knowledge of the Invitation to Bid, and I have full authority from the Bidder to submit this affidavit and accept the responsibilities stated below.
2. I am aware that the Bidder has submitted a Bid, dated on or about _____[insert date] (the "Bid"), to the City of West Linn (City) in response to Invitation to Bid PW-18-01, for South Fork 24-Inch Pipe Restraint Project, and I am familiar with the contents of the Invitation to Bid and Bid.
3. The number shown on this form is Bidder's correct taxpayer identification.
   3.1. Federal Tax Number: _____
   3.2. Oregon Tax Number: _____
4. Bidder is not subject to backup withholding because:
   4.1. Bidder is exempt from backup withholding,
   4.2. Bidder has not been notified by the IRS that Bidder is subject to backup withholding as a result of a failure to report all interest or dividends, or
   4.3. The IRS has notified Bidder that Bidder is no longer subject to backup withholding.
5. I am authorized to act on behalf of Bidder, and have authority and knowledge regarding Bidder's payment of taxes, and to the best of my knowledge, Bidder is not in violation of any Oregon tax laws, including, without limitation, those tax laws listed in ORS 305.380(4), namely ORS Chapters 118, 314, 316, 317, 318, 320, 321 and 323 and Sections 10 to 20, Chapter 533,Oregon Laws 1981, as amended by Chapter 16, Oregon Laws 1982 (first special session); the elderly rental assistance program under ORS 310.630 to 310.706; and any local taxes administered by the Oregon Department of Revenue under ORS 305.620.

_____
Affiant's Signature

STATE OF _____)
)§
COUNTY OF _____)

Signed and sworn to before me on _____ (date) by _____ (Affiant's name).

_____
Notary Public for the State of Oregon

My Commission Expires: _____

KNOW ALL MEN BY THESE PRESENTS, that we, _____

City of West Linn	**PERFORMANCE BOND** Solicitation Number: PW-18-01	**Public Works Department** 22500 Salamo Road West Linn, Oregon 97068 Telephone: (503) 722-5500 Fax: (503) 656-4106

(Official Name & Form of Organization)

Whose address is: _____

(Street Address) *(City)* *(State)* *(Zip)*

as Principal, and, _____

(Name of Surety) *(Print - Agent / Contact Name)* *(Phone Number)*

_____

(Street Address of Surety) *(City)* *(State)* *(Zip)*

a corporation duly authorized to conduct a general surety business in the State of Oregon, as Surety, are jointly and severally held and bound unto the City of West Linn, Oregon, a municipality of the State of Oregon, hereinafter called Obligee, in the sum of _____ and _____/100 DOLLARS ($_____),*(The Contract Price, Both in Words & Figures)* lawful money of the United State of America, for the payment of which we, as Principal, and as Surety, jointly and severally bind ourselves, our successors and assigns firmly by these presents,

TERMS AND CONDITIONS

On the _____ *(Day)* of _____*(Month)*, _____*(Year)*, _____

(Name of Contractor)

Principal, entered into a contract with the City of West Linn, Oregon, Obligee, to construct certain public improvements and to provide material, labor and equipment for the construction of those improvements. The public improvements and work to be performed by Principal are more fully described in the contract documents between Principal and Obligee. Those contract documents are incorporated herein by reference.

In the event that Principal fails to complete the work as required under the contract, Surety shall either complete the work or pay Obligee the costs of completion of the work. Work is only complete when it meets the standards required by the Contract and applicable City standards. Surety's obligation shall remain in effect until the work is accepted by Obligee, but shall terminate on acceptance by Obligee. The total amount of the Surety's liability to Obligee under this bond shall in no event exceed the amount stated above.

Surety agrees that no change, extension of time, alternation, or addition to the terms of the contract, or to the work to be performed thereunder or the specifications accompanying the same shall in anywise affect its obligations on this bond, and it does hereby waive notice of any such change, extension of time, alteration, or addition to the terms of the contract or to the work or the specifications.

IN WITNESS WHEREOF, the parties hereto have caused this Bond to be executed in _____, Oregon, this ____ *(Day)* of _____*(Month)*, _____*(Year)*.

_____
Contractor

_____
Principal Signature

Witnesses:

_____

_____
Principal Printed Name

_____

_____
Surety

(A true copy of the Power of Attorney must be attached to the original of this bond)

Countersigned:

_____
Surety Attorney of Fact

_____
Resident Agent

City of West Linn	**PAYMENT BOND** Solicitation Number: PW-18-01	**Public Works Department** 22500 Salamo Road West Linn, Oregon 97068 Telephone: (503) 722-5500 Fax: (503) 656-4106

KNOW ALL MEN BY THESE PRESENTS, that we, _____
(Official Name & Form of Organization)

Whose address is: _____
(Street Address) *(City)* *(State)* *(Zip)*

as Principal, and, _____
(Name of Surety) *(Print - Agent / Contact Name)* *(Phone Number)*

_____
(Street Address of Surety) *(City)* *(State)* *(Zip)*

a corporation duly authorized to conduct a general surety business in the State of Oregon, as Surety, are jointly and severally held and bound unto the City of West Linn, Oregon, a municipality of the State of Oregon, hereinafter called Obligee, in the sum of _____ and ___/100 DOLLARS ($_____),*(The Contract Price, Both in Words & Figures)* lawful money of the United State of America, for the payment of which we, as Principal, and as Surety, jointly and severally bind ourselves, our successors and assigns firmly by these presents,

TERMS AND CONDITIONS

On the _____ *(Day)* of _____*(Month)*, _____*(Year)*, _____
(Name of Contractor)

Principal, entered into a contract with the City of West Linn, Oregon, Obligee, for the construction of certain public improvements. As part of the contract, Principal is required to furnish materials, labor, and equipment to construct the improvements. The contract documents between Principal and Obligee are incorporated herein by this reference.

In the event that Principal fails to make payments when due to suppliers of labor, equipment or materials, Surety shall pay the suppliers the amounts they are due. In the event that Obligee pays any amounts to suppliers that Principal was required to pay, Surety shall reimburse Obligee for those payments. In the event that Principal permits any lien or claim to be filed or prosecution against the City on account of any labor or material furnished, Surety shall take such steps as are necessary to clear the lien, claim or prosecution. In the event that Principal fails to (1) promptly pay all contributions or amounts due the State Unemployment Compensation Trust Fund incurred to the performance of the contract, (2) promptly, as due, make payments to the person, co-partnership, association, or corporation entitled thereto of the money and sums mentioned in Section 279C.600 of the Oregon Revised Statutes, or (3) promptly pay to the Oregon State Tax Commission all sums required to be deducted and retained from wages of employees of the Principal and his sub-Contractors, pursuant to the Section 316.711, Oregon Revised Statues, Surety shall make the required payments. Surety's obligations under this bond shall terminate when all payments required of Principal described in this paragraph are made in full.

The total amount of the Surety's liability under this bond both to the Obligee and to the persons furnishing labor or materials, provisions and goods to any person or persons, shall in no event exceed the amount stated above.

Surety agrees that no change, extension of time, alternation, or addition to the terms of the contract, or to the work to be performed there under or the specifications accompanying the same shall in anywise affect its obligations on this bond, and it does hereby waive notice of any such change, extension of time, alteration, or addition to the terms of the contract or to the work or the specifications.

IN WITNESS WHEREOF, the parties hereto have caused this Bond to be executed in _____, Oregon, this ____ *(Day)* of _____*(Month)*, _____*(Year)*.

_____
Contractor

_____
Principal Signature

Witnesses:

_____
Principal Printed Name

_____

_____
Surety

(A true copy of the Power of Attorney must be attached to the original of this bond)

Countersigned:

_____
Surety Attorney of Fact

_____
Resident Agent

City of West Linn	**AFFIDAVIT** Solicitation Number: PW-18-01	**Public Works Department** 22500 Salamo Road West Linn, Oregon 97068 Telephone: (503) 722-5500 Fax: (503) 656-4106

CONTRACTOR'S AFFIDAVIT
SETTLEMENT OF CLAIMS

DATE:_____

PROJECT: South Fork 24-Inch Pipe Restraint Project

TO: City of West Linn

Persons:

This is to certify that all lawful claims for materials, rental of equipment, and labor used in connection with the construction of the above, whether by subcontractor or claimant in person, have been duly discharged.

The undersigned, for the consideration of $_____, as set forth in the final pay estimate, as full and complete payment under the terms of the contract, hereby waives and relinquishes any and all further claims or right of lien under, in connection with, or as a result of this project. The undersigned further agrees to indemnify and hold harmless _____against any and all liens, claims of liens, suits, actions, damages, charges and expenses whatsoever, which _____ may suffer arising out of the failure of the undersigned to pay for all labor performance and materials furnished for the performance of said project.

Signed at _____, this _____ day of _____, 20_____

_____
(CONTRACTOR)

BY:_____

STATE OF _____)
)§
COUNTY OF _____)

The foregoing instrument was subscribed and sworn to before me this _____ day of _____, 20___

_____
Notary Pubic

My Commission Expires:_____

Public Works Department
22500 Salamo Road
West Linn, Oregon 97068
Telephone: (503) 722-5500
Fax: (503) 656-4106

Appendix B

TECHNICAL SPECIAL PROVISIONS

APPENDIX B
TECHINCAL SPECIAL PROVISIONS FOR
The South Fork 24-Inch Pipe Restraint Project
FOR
City of West Linn

TABLE OF CONTENTS

Section	Person Responsible	Title	
Division 01 - General Requirements			
01 10 00	JRL	Summary of Work	1-22
01 12 16	JRL	Work Sequence	1-5
01 22 20	JRL	Unit Price Measurement and Payment	1-3
01 33 00	JRL	Submittal Procedures	1-11
01 45 00	JRL	Quality Control	1-5
01 56 39	JRL	Temporary Tree and Plant Protection	1-5
Division 02 - Existing Conditions			
02 41 00	JRL	Demolition	1-6
Division 03 - Concrete			
03 11 00	JRL	Concrete Work	1-28
Division 31 - Earthwork			
31 05 13	JRL	Soils for Earthwork	1-5
31 05 16	JRL	Aggregates for Earthwork	1-6
31 10 00	JRL	Site Clearing	1-8
31 23 16	JRL	Excavation	1-9
31 23 17	JRL	Trenching	1-18
31 23 18	JRL	Rock Removal	1-4
31 23 19	JRL	Dewatering	1-4
31 23 24	JRL	Flowable Fill	1-6
31 50 00	JRL	Excavation Support and Protection	1-5
Division 32 - Exterior Improvements			
32 12 16	JRL	Asphaltic Concrete Pavement	1-5
32 91 21	JRL	Finish Grading and Seeding	1-5
Division 33 - Utilities			
33 01 30.16	JRL	TV Inspection of Pipelines	1-3
33 12 16	JRL	Water Utility Distribution and Transmission Valves	1-7
33 13 00	JRL	Testing and Disinfection of Water Utility Piping	1-9
33 92 10.30	JRL	Steel Water Utility Transmission Piping	1-18

33 92 11.31 JRL Fabricated Specials - Steel Pipe 1-8

Division 40 - Process Integration
40 05 23.18 JRL Butterfly Valves 1-4

SECTION 01 10 00

SUMMARY OF WORK

PART 1 GENERAL

This Summary of Work supplement the City of West Linn Public Works Standards. The City of West Linn Public Works Standards shall apply except as modified herein. This Summary of Work and these additional Technical Special Provisions may contain occasional requirements not pertinent to the project. However, this Summary of Work and these additional Technical Special Provisions shall apply in all particulars insofar as they are applicable to this project.

1.1 APPLICABLE STANDARD SPECIFICATIONS AND PLANS

City of West Linn, Oregon, "2017 Update, City of West Linn Public Works Standard Construction Specifications", apply except as may be modified herein. In the case of discrepancy, unless noted otherwise herein, the more restrictive provisions shall apply.

1.2 SCOPE OF WORK

The work to be performed under these specifications and drawings generally consists of the following:

Restrain existing unrestrained pipe joints on a 24-inch diameter steel water transmission main located on a steep slope above Abernethy Creek in Oregon City, OR. Field locate existing pipe joints via closed circuit TV (CCTV) by cutting into the existing water main near the top of the slope and inserting a CCTV camera to identify and record joint locations for excavation and joint restraint welding. Work includes cut-in installation of two isolation valves located at the top of the slope and within Clackamas County's maintenance yard north of Abernethy Creek, and testing and disinfection of the water main.

The above general outline of principal features of the work does not in any way limit the responsibility of the CONTRACTOR(s) to perform all work and furnish all equipment, labor and materials required by the specifications and drawings. The drawings and specifications shall be considered and used together. Anything appearing as a requirement of either shall be accepted as applicable to both even though not so stated therein or shown.

No attempt has been made in these specifications or drawings to segregate work covered by any trade or subcontract under one specification. Such segregation and establishment of subcontract limits will be solely a matter of specific agreement between the CONTRACTOR and its subcontractors and shall not be based upon any inclusion, segregation or arrangement in or of these specifications.

1.3 COORDINATION OF DRAWINGS AND SPECIFICATIONS

The drawings and specifications are intended to describe and provide for a complete work. Any requirement in one is as binding as if stated in all. The CONTRACTOR shall provide any work or materials clearly implied in the Contract Documents even if the Contract Documents do not mention it specifically. If there is a conflict within the Contract Documents, it will be resolved by the following order of precedence:

A. Permits for outside agencies required by law
B. OWNER-CONTRACTOR Agreement
C. Addenda to Contract Documents
D. CONTRACTOR's Proposal
E. Contract Drawings
F. Technical Special Provisions
G. Standard Terms and Conditions
H. General Terms and Conditions
I. Special Terms and Conditions
J. City of West Linn, Oregon, Design and Construction Standards

Dimensions shown on the drawings or that can be computed shall take precedence over scaled dimensions. Notes on drawings are part of the drawings and govern in the order described above. Notes on drawings shall take precedence over drawing details.

The intent of the drawings and specifications is to prescribe the details for the construction and completion of the work which the CONTRACTOR undertakes to perform according to the terms of the Contract. Where the drawings or specifications describe portions of the work in general terms, but details are incomplete or silent, it is understood that only the best general practice is to prevail and that only materials and workmanship of the best quality are to be used. Unless otherwise specified, the CONTRACTOR shall furnish all labor, materials, tools, equipment, and incidentals, and do all the work involved in executing the Contract in a manner satisfactory to the ENGINEER.

The contract drawings are designated by general title, sheet number and sheet title. When reference is made to the drawings, the "Sheet Number" of the drawing will be used. Each drawing bears the ENGINEER's File No. 18-2161 and the general title:

CITY OF WEST LINN, OREGON
SOUTH FORK 24-INCH PIPE RESTRAINT, PROJECT NO. PW-18-01

The specific titles of each sheet are contained on Sheet G-1.

1.4 CODE REQUIREMENTS

All work shall be done in strict compliance with the requirements of:

A. International Building Code
B. Uniform Mechanical Code
C. Uniform Plumbing Code
D. National Electric Code
E. National Electric Safety Code
F. Oregon State Department of Labor and Industries
G. City of Oregon City Public Work Department
H. Clackamas County

In case of disagreement between codes or these specifications, the more restrictive shall prevail.

1.5 TIME OF COMPLETION/LIQUIDATED DAMAGES

The CONTRACTOR shall complete all work shown and specified within the time limits stated in the Agreement (See Section 01 33 00, Submittal Procedures, for project schedule submittal requirements). The written Notice to Proceed will be sent to the CONTRACTOR after the CONTRACTOR submits the signed Contract, Bonds and insurance certificates to the OWNER and those documents have been approved as to form and executed by the OWNER. The CONTRACTOR's attention is directed to Item 8) of the City of West Linn's General Terms and Conditions.

1.6 COORDINATION WITH OTHER CONTRACTORS AND WITH OWNER

Certain work within this contract may require connection to and coordination with the work of other contractors and OWNER. The CONTRACTOR under these specifications shall cooperate fully with all other contractors and OWNER and carefully fit its own work to such other work as may be directed by the ENGINEER. The CONTRACTOR shall not commit or permit any act to be committed which will interfere with the performance of work by any other contractor or the OWNER.

1.7 ACCESS TO WORK

Access to the work shall be provided as may be required by the OWNER or its representatives, and all authorized representatives of the state and federal governments and any other agencies having jurisdiction over any phase of the work, for inspection of the progress of the work, the methods of construction or any other required purposes.

1.8 PERMITS AND LICENSES

Unless provided for otherwise in these contract documents, all permits, licenses and fees shall be obtained by the CONTRACTOR and all costs shall be borne by the CONTRACTOR. CONTRACTOR shall pay all plan check fees and other fees necessary to obtain permits and shall accommodate special inspections required thereof. CONTRACTOR shall be responsible for compliance with all permit provisions and shall accommodate all special inspections

required thereof, all at no additional expense to the OWNER beyond prices as bid.

1.9 SITE INVESTIGATION AND PHYSICAL DATA

The CONTRACTOR acknowledges that it is satisfied as to the nature and location of the work and the general and local conditions, including but not limited to those bearing upon transportation, disposal, handling and storage of materials, availability of water, roads, groundwater, access to the sites, coordination with other contractors, and conflicts with pipelines, structures and other contractors. Information and data furnished or referred to herein is furnished for information only. Any failure by the CONTRACTOR to become acquainted with the available information and existing conditions will not be a basis for relief from successfully performing the work and will not constitute justification for additional compensation.

The CONTRACTOR shall verify the locations and elevations of existing pipelines, structures, grades and utilities, prior to construction. The OWNER assumes no responsibility for any conclusions or interpretations made by the CONTRACTOR on the basis of the information made available.

1.10 TEMPORARY UTILITIES FOR CONSTRUCTION PURPOSES

The CONTRACTOR shall make all arrangements necessary to provide all temporary utilities for construction purposes and shall pay all costs associated those temporary utilities. Water for construction purposes will be furnished by the OWNER at no cost. The CONTRACTOR shall furnish all valves, hoses, connections and other devices as necessary to obtain sufficient water for construction and for filling and testing of water lines as required. Fire hydrant use is allowed only by permission of the utility owner. Backflow protection is required on all connections to potable water systems.

1.11 FIELD SERVICE BY MANUFACTURER'S REPRESENTATIVE

The CONTRACTOR shall furnish the services of a manufacturer's or material supplier’s representative for all major equipment and materials furnished by the CONTRACTOR or OWNER under this contract, to check, place in operation and test the installation, and train operating personnel. The manufacturer's representative shall be qualified and authorized to perform repairs and maintenance on the equipment. The above gives a general scope of the services desired from the manufacturer's representative. It will be the responsibility of the CONTRACTOR and the equipment manufacturer to determine detailed requirements. Costs for services of the manufacturer's representative shall be included in the proposal of the CONTRACTOR. The operator training mentioned above shall include sufficient time during the CONTRACTOR’s operation and testing period to fully explain to the operating personnel the features of the equipment and maintenance thereof.

1.12 CONSTRUCTION WITHIN PUBLIC RIGHTS-OF-WAY

When the work contemplated is wholly or partly within the right-of-way of a public agency such as a city, county or state, the Contractor will obtain from these agencies any right-of-way and street opening permits and all other necessary permit(s) required for the work. The CONTRACTOR shall abide by all regulations and conditions stipulated in the permit(s). Such conditions and requirements are hereby made a part of these specifications, as fully and completely as though the same were fully set forth herein. The CONTRACTOR shall examine the permit(s) granted by any city, county, state and federal agencies. Failure to do so will not relieve the CONTRACTOR from compliance with the requirements stated therein.

The CONTRACTOR shall obtain all construction permits and pay all fees or charges and furnish any bonds and insurance coverages as necessary to insure that all requirements of the city, county, state or federal agencies will be observed and the roadway and ditches are restored to their original condition or one equally satisfactory. A copy of all permits shall be kept on the work site for use of the ENGINEER.

The following permit shall be obtained by the CONTRACTOR:

- City of Oregon City, Right-of-Way (ROW) Street Permits (https://www.orcity.org/publicworks/right-way-row-street-permits)

1.13 CONSTRUCTION WITHIN PRIVATE EASEMENTS

When portions of the work contemplated are within easements held by the OWNER on private property, the CONTRACTOR shall ascertain for itself to what extent the width, status and special conditions attached to easements may have on its operations and all costs resulting therefrom shall be included and absorbed in the unit prices of the CONTRACTOR's bid. CONTRACTOR shall coordinate with private property owners and businesses if required. Landscaping, surface restoration and fence restoration shall be completed within 24 hours following piping and conduit installation and other construction work. Temporary fencing shall be provided continuously until such private fencing is properly restored.

The CONTRACTOR's attention is directed to Paragraph 6.20 of the General Conditions regarding safety and the protection of property. Certain portions of this project require working in close proximity to existing structures and property within private easements. It is the CONTRACTOR'S responsibility to conduct its operations and limit the size of equipment used in such a manner so as to prevent damage to existing property from excessive vibration or from other direct or indirect CONTRACTOR operations. The cost associated with repairing or replacing property that is damaged by the CONTRACTOR's operations shall be the responsibility of the CONTRACTOR, in accordance with the General Conditions.

1.14 RAILROAD CROSSINGS

NOT USED

1.15 PRIVATE ROADS AND DRIVEWAYS

Bridges at entrances to business properties where vehicular traffic is necessary shall be provided and maintained. Bridges shall be adequate in width and strength for the service required. No private road or driveway may be closed without approval of the ENGINEER unless written authority has been given by the owner whose property has been affected. Driveways shall be left open and ready for use at the end of the work shift. All expenses involved in providing for construction, maintenance, and use of private roads or driveways, shall be borne by the CONTRACTOR and the amount thereof absorbed in the unit prices of the CONTRACTOR's bid.

1.16 TRAFFIC CONTROL AND PROTECTION

The CONTRACTOR shall maintain traffic control and protection in the work areas twenty-four (24) hours per day. Traffic control shall conform to the standards set forth in the "Oregon Manual on Uniform Traffic Control Devices" issued by the Oregon Department of Transportation.

The CONTRACTOR shall conduct its operations so as to keep one lane of traffic open for public and private access at all times on City, County and Public streets, roads and highways. If required by the State, the CONTRACTOR shall conduct its operations so as to keep both directions of traffic open on State Highways. Permits obtained for the project may have more stringent requirements than noted in this section.

Prior to beginning construction, the CONTRACTOR shall submit a detailed street closure and traffic control plan to the ENGINEER for approval. As construction proceeds, the CONTRACTOR shall notify the ENGINEER as to the status of street closures and detours.

On streets where traffic is heavy, the ENGINEER may require the construction of two-way bridges of adequate design. These bridges shall be provided with guard rails and shall be well lighted at all times. Detours as required by the ENGINEER shall be surfaced with gravel or crushed rock and maintained in good condition. Detours for pedestrians shall not exceed one block in length, and foot bridges over the trenches shall be provided with adequate handrails.

All work shall be carried on with due regard for safety to the public. Open trenches shall be provided with barricades of a type that can be seen at a reasonable distance, and at night they shall be distinctly indicated by adequately placed lights.

1.17 MATERIALS AND COMPACTION TESTING

The CONTRACTOR shall provide the services of a licensed, independent agency to perform

materials and compaction testing for this project. The agency must be approved by the ENGINEER. Materials and compaction tests will be required to show that specified densities of compacted backfill and asphaltic concrete surfacing are being achieved by the CONTRACTOR's compaction methods. The CONTRACTOR shall provide the ENGINEER with copies of recent Proctor tests for the backfill and paving material in addition to copies of compaction tests performed in the field.

After the ENGINEER is satisfied that the CONTRACTOR's method of compaction consistently meets specified compaction requirements, the testing frequency may be reduced. The ENGINEER may direct testing at a higher frequency upon failure to obtain specified densities or if the CONTRACTOR changes compaction equipment or methods of compaction. All test locations shall be determined by the ENGINEER.

1.18 DECHLORINATION AND DISPOSAL OF CHLORINATED WATER

Any discharge of chlorinated water shall either be through an approved connection to a public sanitary sewer system or shall include dechlorination to limits acceptable by the Oregon State Department of Environmental Quality (DEQ) for discharge into the existing storm drainage system. No chlorinated water shall be discharged into the storm drainage system prior to approved dechlorination treatment.

1.19 LIMITS OF THE WORK AND STORAGE OF SPOILS

The limits of the site which may be used for construction, storage, materials handling, parking of vehicles and other operations related to the project include the project site as shown on the drawings and adjacent public rights-of-way subject to permission of the public owner of that right-of-way. The limits of work also include rights of access obtained by the CONTRACTOR, subject to all public laws and regulations and rights of access by utility companies and other holders of easement rights.

1.20 EXISTING WATER SYSTEM SHUTDOWN

If the project involves the need to shut down an existing water system, the CONTRACTOR shall coordinate the work to insure a minimum of shutdown time. The CONTRACTOR shall submit a written shutdown schedule to the ENGINEER for approval. The CONTRACTOR shall provide 72-hour notice preceding each shutdown.

Total duration of South Fork 24-inch water transmission main shutdown shall last no longer than 30-calendar days. See Section 01 12 16, Work Sequence for additional details.

1.21 FIELD CHANGES, ALIGNMENT AND GRADE

Changes of alignment and grade shall be made during the course of work in order to avoid interference with unforeseen obstructions. The CONTRACTOR shall locate existing utilities to be crossed, by potholing ahead of the pipe installation, of sufficient distance to avoid conflicts through pipe joint deflection if possible. All costs for minor field changes of

alignment and grade shall be borne by the CONTRACTOR. The ENGINEER will endeavor to make prompt decisions on such matters. CONTRACTOR shall anticipate a minimum of 72 hours for any decision requiring significant piping change.

1.22 TESTING AND OPERATION OF FACILITIES

It is the intent of the OWNER to have a complete and operable facility. All of the work under this contract will be fully tested and inspected in accordance with the specifications. Upon completion of the work, the CONTRACTOR shall operate the completed facilities as required to test the equipment under the direction of the ENGINEER. During this period of operation by the CONTRACTOR, the new facilities will be tested thoroughly to determine their acceptance.

1.23 PROTECTION OF EXISTING STRUCTURES AND WORK

The CONTRACTOR must take all precautions and measures necessary to protect all existing structures and work. Any damage to existing structures and work shall be repaired by removing the damaged structure or work, replacing the work and restoring to original condition satisfactory to the ENGINEER.

1.24 SALVAGE AND DEBRIS

Unless otherwise indicated on the drawings or in the specifications, all castings, pipe, equipment, demolition debris, spoil or any other discarded material or equipment shall become the property of the CONTRACTOR and shall be disposed of in a manner compliant with applicable Federal State and local laws and regulations governing disposal of such waste products. No burning of debris or any other discarded material will be permitted.

1.25 SAFETY STANDARDS AND ACCIDENT PREVENTION

The CONTRACTOR shall be solely and completely responsible for conditions of the job site, including safety of all persons and property during performance of the work. This requirement shall apply continuously and not be limited to normal working hours. The required and/or implied duty of the ENGINEER to conduct construction review of the CONTRACTOR's performance does not, and is not intended to, include review of the adequacy of the CONTRACTOR's safety measures in, on, or near the construction site.

The CONTRACTOR shall comply with the safety standards provisions of applicable laws and building and construction codes. The CONTRACTOR shall exercise every precaution at all times for the prevention of accidents and protection of persons, including employees, and property. During the execution of the work the CONTRACTOR shall provide and maintain all guards, railing, lights, warnings, and other protective devices which are required by law or which are reasonably necessary for the protection of persons and property from injury or damage.

1.26 PUBLIC SAFETY AND CONVENIENCE

General Rule: The CONTRACTOR shall ensure the safety of the public during its performance of the Work and shall minimize any public inconvenience in addition to any other requirement imposed by law. These duties include, but are not limited to, the matters listed below.

Access: The CONTRACTOR shall not unreasonably restrict access to public facilities, commercial property, fire hydrants, residential property, and other areas where the public can be expected to be present, such as sidewalks and streets without first obtaining approval of the OWNER. Driveways shall be closed only with the approval of the OWNER or after obtaining specific permission from the property owner or owners. In addition, the CONTRACTOR shall not obstruct or interfere with travel over any public street or sidewalk without approval of the OWNER.

Public Transit: The CONTRACTOR shall not interfere with the normal operation of any public transit vehicles unless otherwise authorized.

Work Site: The CONTRACTOR shall keep the Project site safe in compliance with applicable law. Safety includes, but is not limited to: 1) providing an approved type of secured and adequate barricades or fences that are easily visible from a reasonable distance around open excavations; 2) closing up or covering with steel plates all open excavations at the end of each Working Day in all street areas and in all other areas when it is reasonably required for public safety; 3) marking all open work and obstructions by lights at night; 4) installing and maintaining all necessary signs, lights, flares, barricades, railings, runways, stairs, bridges, and facilities; 5) observing any and all safety instructions received from the OWNER; and 6) following all laws and regulations concerning worker and public safety. In the event that the law requires greater safety obligations than that imposed by the OWNER, the CONTRACTOR shall comply with the law.

Emergency: Emergency vehicles, including but not limited to police, fire, and disaster units shall be provided access to the work site at all times.

Cleanliness: The CONTRACTOR shall, on a continuing basis, keep the surfaces of all public and private roadways, sidewalks, and other pathways free of dirt, mud, cold plane grindings, and other matters that the CONTRACTOR may place upon the road. The cost of performing such work shall be included in the CONTRACTOR's Bid and no additional payment will be made for performing this task.

Parking: The CONTRACTOR shall make any necessary contacts with all applicable governmental bodies to arrange for the removal of parked automobiles, vehicles and other obstructions if they would interfere with the performance of the CONTRACTOR'S work.

Accidents: The CONTRACTOR'S Project Manager or superintendent shall be in charge of accident prevention. CONTRACTOR shall take all actions necessary to prevent damage, injury

and loss to persons and property as a result of accidents.

Project Health and Safety Plan: CONTRACTOR shall develop, publish, and implement an overall Project Health and Safety Program for the Project. This Program shall conform to all applicable codes. Contractor shall submit the written Safety Program to the OWNER within thirty (30) days after the receipt of the written Notice to Proceed. The Plan shall be assembled to address project specific health and safety issues to both the public and on-site personnel. The plan shall include the following items when they apply:

- Employee orientation
- Safety inspections
- Instruction and training
- Accident reporting
- Signs and barricades
- Fire prevention and protection
- Welding, cutting and burning
- Painting and surface treatment
- Electricity
- Machinery and mechanized equipment
- Excavations
- Sanitation
- Chlorine safety
- Hazardous materials
- Hazardous communications program
- Job hazard analysis
- First aid/medical facilities
- Personal protective equipment
- Confined space entry plan
- Shoring plan
- Fall protection plan
- Emergency Action Plan
- Housekeeping
- Safety training requirements and certification
- Pedestrian access around work site during construction and after hours

If the project requires other health and safety issues to be addressed, they too shall be included in the Project Health and Safety Plan. The Program shall subsequently be distributed to and implemented by the CONTRACTOR's personnel as well as its Subcontractors and Suppliers. CONTRACTOR shall fully implement and comply with the Safety Program, and shall submit to the OWNER a letter signed by CONTRACTOR'S owner/president affirming such implementation and compliance within fifteen (15) days after on-site work has started. CONTRACTOR shall notify the OWNER when safety meeting will be held so that Owner’s personnel may attend. A copy of the approved Health and Safety Plan must be maintained on-site at all times during the life of the Project.

The OWNER has no responsibility for Work site safety. Work site safety is the responsibility of the CONTRACTOR. The CONTRACTOR is required to have a competent person on site at all times during construction activities.

The CONTRACTOR shall provide signs on work zone fencing that provide information regarding access to businesses and stating that such businesses are open and in operation. The CONTRACTOR shall furnish and install the signs and provide sign attachments for the various business names.

1.27 WARRANTY PERIOD

The CONTRACTOR shall warrant all furnished materials and equipment for a period of one year from date of final acceptance of the Work by the OWNER. This warranty shall mean prompt attention to the correction and/or complete replacement of the faulty material or equipment. The expiration of the one-year warranty period shall not affect any other claims or remedy available to the OWNER. There may be other warranty provisions in these contract documents in addition to those noted above.

1.28 UTILITY PROPERTIES AND SERVICE

In areas where the CONTRACTOR's operations are adjacent to or near a utility and such operations may cause damage which might result in significant expense, loss and inconvenience, the operations shall be suspended until all arrangements necessary for the protection thereof have been made by the CONTRACTOR.

The CONTRACTOR shall notify all utility offices which may be affected by the construction operation at least 48 hours in advance. Before exposing any utility, the utility having jurisdiction shall grant permission and may oversee the operation. Should service of any utility be interrupted due to the CONTRACTOR's operation, the proper authority shall be notified immediately. It is of the utmost importance that the CONTRACTOR cooperates with the said authority in restoring the service as promptly as possible. Any costs shall be borne by the CONTRACTOR.

1.29 SANITARY FACILITIES

The CONTRACTOR shall provide and maintain sanitary facilities for its employees and its subcontractors' employees that will comply with the regulations of the local and State Departments of Health and as directed by the ENGINEER.

1.30 STREET CLEANUP

The CONTRACTOR shall clean daily all dirt, gravel, construction debris and other foreign material resulting from its operations from all streets and roads.

1.31 VEHICLE PARKING

The vehicles of the CONTRACTOR's and subcontractors' employees shall be parked in accordance with local parking ordinances.

1.32 PROTECTION OF QUALITY OF WATER

The work to be performed may involve connections to an existing potable water system. If such work is included in the project, the CONTRACTOR shall take such precautions as are necessary or as may be required to prevent the contamination of the water. Such

contamination may include but shall not be limited to deleterious chemicals such as fuel, cleaning agents, paint, demolition and construction debris, sandblasting residue, etc. In the event contamination does occur, the CONTRACTOR shall, at its own expense, perform such work as may be necessary to repair any damage or to clean the affected areas of the water mains to a condition satisfactory to the ENGINEER.

1.33 RECORD DRAWINGS

CONTRACTOR shall maintain at the site one set of specifications, full size drawings, shop drawings, equipment drawings and supplemental drawings which shall be corrected as the work progresses to show all changes made. Drawings shall be available for inspection by the ENGINEER. Upon completion of the contract and prior to final payment, specifications and drawings shall be turned over to the ENGINEER.

1.34 "OR EQUAL" CLAUSE

In order to establish a basis of quality, certain processes, types of machinery and equipment or kinds of material may be specified on the drawings or herein by designating a manufacturer's name and referring to its brand or product designation. It is not the intent of these specifications to exclude other processes, equipment or materials of a type and quality equal to those designated. When a manufacturer's name, brand or item designation is given, it shall be understood that the words "or equal" follow such name or designation, whether in fact they do so or not. If the CONTRACTOR desires to furnish items of equipment by manufacturers other than those specified, he shall secure the approval of the ENGINEER prior to placing a purchase order.

No extras will be allowed the CONTRACTOR for any changes required to adopt the substitute equipment. Therefore, the CONTRACTOR's proposal for an alternate shall include all costs for any modifications to the drawings, such as structural and foundation changes, additional piping or changes in piping, electrical changes or any other modifications which may be necessary or required for approval and adoption of the proposed alternate equipment. Approval of alternate equipment by the ENGINEER before or after bidding does not guarantee or imply that the alternate equipment will fit the design without modifications.

1.35 SURVEYS

NOT USED

1.36 WORK HOUR LIMITATIONS

See General Terms and Conditions.

1.37 DUST PREVENTION

All unpaved streets, roads, detours, haul roads or other areas where dust may be generated shall receive an approved dust-preventive treatment or be routinely watered to prevent

dust. Applicable environmental regulations for dust prevention shall be strictly enforced.

1.38 EROSION AND SEDIMENTATION CONTROL

Temporary construction site erosion control measures shall be designed and constructed in accordance with City of Oregon City Public Works Permit and DEQ Best Management Practices.

Erosion control measures shall be maintained throughout the project site until approved permanent cover such as a healthy stand of grass, other permanent vegetation, or other ground covering is established. When approved permanent ground cover is established, all temporary erosion control measures shall be removed from the construction site. Erosion control measures shall be installed as approved, per the erosion control drawing(s) in the above referenced document. Erosion control measures including stabilized construction entrances and sediment barriers must be established in conjunction with site clearing and grading.

During construction, and until permanent vegetation or other ground covering is established, the erosion control facilities shall be upgraded as needed for unexpected storm events or site conditions and with the purpose of retaining sediment and sediment-laden water on the construction site.

1.39 INTERFERENCES, OBSTRUCTIONS AND SEWER CROSSINGS

At certain places, power, light and telephone poles may interfere with excavation and the operation of the CONTRACTOR's equipment. Necessary arrangements shall be made with utility companies for moving or maintaining such poles. The utility company affected by any such interferences shall be notified thereof so that the necessary moving or proper care of poles and appurtenances may have appropriate attention.

All costs resulting from any other interferences and obstructions, or the replacement of such, whether or not herein specifically mentioned, shall be included and absorbed in the unit prices of the CONTRACTOR's bid.

1.40 NOISE LIMITATIONS

The project areas are located within a residential zoned area. All applicable City, County ordinances and State and Federal regulations shall be complied with.

1.41 STORAGE AND PROTECTION OF EQUIPMENT AND MATERIALS

A. Materials and equipment stored overnight shall be placed neatly on the job site. Unusable materials (i.e. rejected or damaged liner material, old concrete chunks, metal scraps, etc.) shall be expeditiously removed from the job site.

Provide appropriate barricades, signs, and traffic control devices in like-new condition

where necessary to protect the public from any hazards associated with the storage of materials and equipment used for this project.

B. No equipment and/or materials shall be stored outside the immediate work area on public right-of-ways, in the following locations, or in the following manner:

1. In any maintained landscaped or lawn area.

2. In a manner that would totally eliminate an individual residents' street parking.

3. In front of any business.

The “immediate work area” is the area where work is taking place or will be taking place within one calendar day. The CONTRACTOR shall immediately move stored material or equipment which causes a nuisance or creates complaints.

1.42 COMPETENT PERSON DESIGNATION

CONTRACTOR shall designate a qualified and experienced “competent person” at the site whose duties and responsibilities shall include enforcement of Oregon - OSHA regulations regarding excavations, the prevention of accidents, and the maintenance and supervision of construction site safety precautions and programs.

1.43 EMERGENCY MAINTENANCE SUPERVISOR

The CONTRACTOR shall submit to the ENGINEER the names, addresses and telephone numbers of at least two employees responsible for performing emergency maintenance and repairs when the CONTRACTOR is not working. These employees shall be designated, in writing by the CONTRACTOR, to act as its representatives and shall have full authority to act on its behalf. At least one of the designated employees shall be available for a telephone call any time an emergency arises.

1.44 PREVAILING WAGE RATES FOR PUBLIC WORKS CONTRACTS IN OREGON

The CONTRACTOR shall abide by ORS 279C.800 through 279C.870 which relate to the prevailing wage rates for the building and construction trades in the State of Oregon. These prevailing wage rates are shown in the Bureau of Labor and Industries document which is included elsewhere in these contract documents.

1.45 OREGON PRODUCTS

CONTRACTOR's attention is directed to the provisions of Oregon Law, ORS 279A.120 regarding the preference for products that have been manufactured or produced in Oregon. CONTRACTOR shall use Oregon-produced or manufactured materials with respect to common building materials such as cement, sand, crushed rock, gravel, plaster, etc., and Oregon-manufactured products in all cases where price, fitness, availability and quality are

otherwise equal.

1.46 USE OF EXPLOSIVES

The use of explosives shall not be allowed on this project. Alternative methods of excavation shall be utilized.

1.47 CONTAMINATED MATERIAL

A. General

It is possible that the CONTRACTOR may encounter contaminated material (soil and/or water) during excavation activities. This specification identifies requirements for handling and disposing contaminated media.

B. Definitions

1. “Contaminated material” is defined as soil, water, free product, Underground Storage Tanks (UST), buried abandoned utility lines containing residual or free product, solid waste, treated wood waste, chemical containers, or other solid, liquid, or gas substances with contamination levels above background levels.

2. “Hazardous substances” shall mean those substances or materials defined in the Oregon Revised Statutes (ORS) 465.200, as amended.

3. “Release” shall have the meaning as defined in ORS 465.200, as amended.

4. “Environmental laws” shall mean any applicable statute, law, ordinance, order, consent decree, judgment, permit, license, code, covenant, deed, common law, treaty, convention or other requirement pertaining to protection of the environment, health or safety, natural resources, conservation, wildlife, waste management or disposal, hazardous substances or pollution, including but not limited to regulation of releases to air, land, water, and groundwater.

C. Execution

1. Discovery of Contaminated Material

In the event that the CONTRACTOR, during the course of construction or during any other activities authorized under this contract, should encounter suspected contaminated material or any other materials suspected of posing a threat to human health and the environment, the CONTRACTOR shall notify the ENGINEER immediately and manage according to requirements identified below.

2. Discovery of Contaminated Soil

CONTRACTOR shall note evidence of contamination (odor, visual staining of soil, free liquid product seeping from soil, sheen on groundwater etc.) and note location of evidence on a sketch of the excavation and provide to the ENGINEER.

CONTRACTOR shall report the discovery to the ENGINEER immediately. CONTRACTOR shall stop all excavation activities, and secure the site to prevent entry by the public. The excavation shall not be backfilled. Protect all open excavations with berms, plates and fencing. CONTRACTOR may continue with work in other non-contaminated areas.

CONTRACTOR shall assist ENGINEER in collecting sample(s) of suspected contaminated media for testing and characterization. CONTRACTOR shall allow 21 days, at no cost to OWNER, for testing, results and instructions as to how to proceed with contaminated materials.

The CONTRACTOR shall obtain a copy of an approved soil disposal/acceptance permit (Disposal/Treatment Facility requires transporter to have a copy of the permit.)

CONTRACTOR will transport and dispose of contaminated material at an approved disposal/treatment facility.

CONTRACTOR shall provide the ENGINEER with a copy of the contaminated soil disposal receipt.

3. Handling of Contaminated Soil

After approval from the ENGINEER, excavate the soil in a manner that prevents commingling of contaminated and non-contaminated soil. ENGINEER will make determination (based on soil saturation) if contaminated soil can be directly transported to a treatment or disposal facility, or if soil needs to be stockpiled to reduce water content. ENGINEER will determine when stockpiled soil can be transported off-site.

CONTRACTOR will be responsible for stockpiling contaminated soil in containers or on impervious surface to prevent the spread of contamination. Any water runoff from the contaminated soil stockpile area(s) must be contained by CONTRACTOR and handled as contaminated water.

Minimize movement of excavation equipment over or through contaminated soil to prevent movement of contaminated soil into areas where no contaminated soil exists.

Stockpiles will be created on an approved site and shall be surrounded by a fence to limit access. The stockpiles must be covered and bermed during periods of rainfall to prevent run-on and run-off. The stockpiles shall be covered with a

minimum 10 mil high density polyethylene (HDPE) plastic during periods of strong winds, nightfall, over the weekends, or during extended work stoppages. If dust is observed coming from the stockpiles, the stockpiles shall be either covered or the dust controlled with water.

Maintain excavation equipment in good working order. Prevent spillage of oil, fuel, or hazardous substances from equipment. In particular, promptly repair oil leaks from equipment and clean up any contaminated soil.

4. Transport of Contaminated Materials

CONTRACTOR shall comply with all applicable Federal, State, or local laws, codes, and ordinances that govern or regulate contaminated substance transportation. Contaminated soils placed in stockpiles shall be loaded into trucks in a manner that prevents the spilling or tracking of contaminated soil into areas of the site with uncontaminated soil. Loose material falling onto the exterior of the truck during loading shall be removed before the truck leaves the loading area. Any material collected in the loading area shall either be placed back into the truck or back into the stockpile. If loading areas are unpaved, the surface soil shall be sampled at the conclusion of the loading activities to confirm that contaminated soil is not present. If loading areas are paved, any loose soil shall be cleaned from the pavement at the conclusion of the loading activities.

Specific truck haul routes shall be established before beginning off-site contaminated media transport. On-site truck routes shall be established to minimize or prevent movement of trucks over contaminated soils. Off-site truck routes shall be established to reduce the risk of releases of contaminated soils and impact on local traffic. The CONTRACTOR shall be responsible for ensuring that loaded truck weights are within acceptable limits. All trucks shall be covered before they leave the loading area.

The CONTRACTOR shall ensure that all drivers of vehicles transporting contaminated substances have in their possession during transport all applicable Oregon State and local vehicle insurance requirements, valid driver's license, and vehicle registration and license. The CONTRACTOR shall be responsible for informing all drivers of transport vehicle about:

a. The nature of the material transported.

b. Required routes to and from the off-site thermal treatment or disposal facility.

c. Applicable County street regulations and requirements, and State of Oregon Department of Transportation codes, regulations and requirements.

d. The County's requirement for proper handling and transportation of the substances.

The CONTRACTOR shall not allow contaminated substances to be spilled or tracked off-site at any time during the project. Trucks used for the transportation of contaminated substances off-site shall be water tight, substance compatible, licensed, insured, and permitted pursuant to federal, state, and local statutes, rules, regulations and ordinances.

If contaminated media is discarded prior to removal of contaminated material, the price per cubic yard of soil materials and price per 100 gallons of contaminated water will be negotiated with OWNER

1.48 QUALIFICATION PRIOR TO BIDDING

NOT USED

1.49 SEQUENCE OF CONSTRUCTION REQUIREMENTS

SEE SECTION 01 12 16, WORK SEQUENCE.

1.50 FACILITY OPERATIONS REQUIREMENTS

NOT USED

1.51 CONSTRUCTION WITHIN STATE WATERS

NOT USED

1.52 CONDITIONAL USE PERMIT

NOT USED

1.53 PROJECT INFORMATION SIGNS

NOT USED

1.54 RESERVOIR CONTRACTOR QUALIFICATION PRIOR TO BIDDING

NOT USED

1.55 RESERVOIR PRESTRESSOR QUALIFICATION PRIOR TO BIDDING

NOT USED

1.56 TANK PAINTING CONTRACTOR QUALIFICATION PRIOR TO BIDDING

NOT USED

1.57 WATER MAIN CONTRACTOR QUALIFICATION PRIOR TO BIDDING

NOT USED

1.58 HORIZONTAL DIRECTIONAL DRILLING CONTRACTOR QUALIFICATION PRIOR TO BIDDING

NOT USED

1.59 EARTHWORK CONTRACTOR QUALIFICATION PRIOR TO BIDDING

NOT USED

1.60 AGGREGATE PIER CONTRACTOR QUALIFICATION PRIOR TO BIDDING

NOT USED

1.61 MICROPILE CONTRACTOR QUALIFICATION PRIOR TO BIDDING

NOT USED

1.62 SPECIAL INSPECTIONS

SEE SECTION 01 45 00, QUALITY CONTROL.

1.63 EXTENDED WARRANTY PROVISIONS FOR PAVING IN CLATSOP COUNTY AND ODOT RIGHTS-OF-WAY

NOT USED

1.64 NPDES 1200-C STORMWATER DISCHARGE PERMIT ACQUISITION BY CONTRACTOR

NOT USED

1.65 WORK WITH EXISTING ASBESTOS WATER PIPELINES

NOT USED

END OF SECTION

SECTION 01 12 16

WORK SEQUENCE

PART 1 GENERAL

1.1 SUMMARY

A. This Section includes general sequencing, project phasing and coordination requirements for the Work.

1.2 RELATED SECTIONS

Section/Division No.	Item
01 10 00	Summary of Work

1.3 GENERAL CONSTRAINTS ON SEQUENCE AND SCHEDULING OF WORK

A. Coordinate construction schedule and operation with OWNER and ENGINEER.

B. Coordinate proposed work with OWNER and ENGINEER before implementing shutdowns of any water system facilities associated with the Project. Under no circumstances shall work cease at the end of a normal working day if such actions may inadvertently cause a cessation of any facility operating process; in which case, CONTRACTOR shall remain on site until necessary repairs are complete and full water system function is restored.

C. Do not close lines, open valves, or take other action that would affect the operation of existing systems, except as specifically required by the Contract Documents and after approval of OWNER and ENGINEER.

D. CONTRACTOR shall not operate any of the existing equipment or facilities without written permission from the OWNER naming the specific piece of equipment and dates the CONTRACTOR may use the equipment or facilities. The CONTRACTOR is liable for any loss or damage caused to property or equipment or facilities or any personal injury resulting from or related to this usage.

1.4 SUBMITTALS

A. Submit a Work Sequencing Plan detailing the complete sequence of construction for all activities contained herein.

B. Identify the following in the Work Sequencing Plan:

1. Major work activities to occur.

2. General schedule when work will occur. Submit separately a detailed schedule as specified in Section 01 33 00, Submittal Procedures. Incorporate materials in detailed schedule and work sequencing plan.

3. What assistance will be required of OWNER's operating personnel during shutdown and for start-up.

4. Name of individual in charge of CONTRACTOR's activity during shutdown.

1.5 SHUTDOWN OF WATER TRANSMISSION MAIN

B. Submit requests for shutdown of water transmission main not less than ten (10) business days in advance of the date scheduled for the interruption.

C. Following receipt of the request, ENGINEER will notify the CONTRACTOR if the requested date will be permitted. Evaluation of the request will be based upon the availability of the utility owner's personnel to assist and monitor utilities during the shutdown period and impact to customer service.

D. Minimize the period of interruption by thorough advance planning. Procure required materials, equipment and labor and have on hand during the shutdown.

E. Do not begin interruption until written authorization is received from ENGINEER.

F. Total duration of water transmission main shutdown shall last no longer than 30-calendar days.

PART 2 PRODUCTS

NOT USED

PART 3 EXECUTION

3.1 GENERAL REQUIREMENTS FOR EXECUTION OF WORK

A. Maintain overall coordination of execution of Work.

B. Obtain all necessary permits for the work.

C. Obtain schedules from subcontractors and suppliers and assume responsibility for correctness.

D. Incorporate schedules from all parties into Progress Schedule to plan for and

comply with sequencing constraints.

E. Pre-locate by exploratory excavation existing utilities to minimize service interruption and demands on OWNER's personnel.

3.2 SEQUENCE OF CONSTRUCTION REQUIREMENTS

A. After Notice to Proceed (NTP) is issued by the Owner, Contractor to provide material submittals to Owner/Engineer for long lead items such as 24-inch butterfly valves and 24-inch ductile iron dismantling joints for review and comment prior to ordering, and also submit application(s) and required plans to City of Oregon City for obtaining Right-of-Way (ROW) Street Permits.

B. After permits have been obtained from City of Oregon City, Contractor to excavate and uncover existing pipeline at both cut-in valve reconnection locations, at top of slope and in Clackamas County's yard, to determine outside diameter (OD) of the 24-inch steel pipe can at the cut-in locations. Contractor to provide steel pipe fabricator steel can OD's to develop steel pipe shop drawings.

C. Pipe main shut down, draining and pipe cut-ins shall not commence until after Labor Day, 9/3/18, pipe materials for both cut-in valve reconnections are onsite and ready for installation, and shutdown schedule is approved by and coordinated with the City. The Contractor shall only be allowed 30-calendar days of shutdown time for water transmission pipeline.

D. Contractor to also complete exploratory excavation for reinforced concrete anchor block. If directed to install reinforced concrete anchor block by Owner per results of exploratory excavation, Contactor to use field measurements of steel pipe OD for procuring anchor block materials from steel pipe fabricator.

E. Once pipe shut down is coordinated with the City, Contractor to work with City staff to drain the pipeline and complete exploratory cut-in and CCTV pipeline joint inspection. Existing joint locations and conditions to be documented by the CCTV subcontactor after equipment has been disinfected per approved submittal, and the required data is to be provided to the Owner/Engineer, along with proposed method for restraint for each existing pipe joint on the slope, by the Contractor.

F. After restraint methods have been confirmed by OWNER/ENGINEER, Contractor to complete both cut-in valve reconnections. Both excavations shall be left open and pipeline section between cut-in valves hydrostatically tested per Section 33 13 00 – Testing & Disinfecting of Water Utility Piping to confirm no visual leaks at the valve cut-in reconnections, and determine a baseline leakage (if any) of this section of pipeline.

G. Once baseline leakage test has been completed, Contractor to excavate and restrain existing joints on slope, leaving all excavations open afterwards for weld testing by independent testing agency inspector per Sections 33 92 10.30 – Steel Water Utility Pipe Transmission Piping.

H. After all joint restraints, as well as welds to the existing pipeline for attaching the reinforcing wrapper plate with cast-in flange for the reinforced concrete anchor block (if directed) have been completed and all welds tested as required, Contractor to hydrostatically test the pipeline section between cut-in valves a second time per Section 33 13 00. Contractor may backfill each joint after weld testing and coating repair, and prior to hydrostatic pressure test has been completed if a reasonable baseline leakage rate was documented in subsection F. If not, the joints will need to be visually inspected during hydrostatic testing. After hydrostatic testing has been successfully completed, Contactor to disinfect the pipeline per approved disinfection plan.

I. Contractor shall coordinate scheduling of weld inspection, hydrostatic pressure testing, and disinfection with OWNER/ENGINEER such that OWNER'S REPRESENTATIVE may be present to observe both the weld inspection and hydrostatic testing, and City staff may assist in opening valves for filling and flushing the pipeline per approved testing and disinfection plans.

J. After all hydrostatic testing and disinfection has been completed and reinforced concrete anchor block has been completely installed (if directed), Contractor to complete pavement restoration and general surface restoration.

END OF SECTION

SECTION 01 22 20

UNIT PRICE MEASUREMENT AND PAYMENT

PART 1 GENERAL

Measurement and payment will be on a unit price basis in accordance with the prices set forth in the proposal for individual work items. Where work is required but does not appear as a separate item in the proposal, the cost for that work shall be included and absorbed in the unit prices named in the proposal. CONTRACTOR shall make a careful assessment when preparing the bid.

1. Mobilization, Demobilization Bonds, and Insurance: Payment for mobilization, bonds, insurance and demobilization will be on a lump sum basis. The amounts paid for mobilization in the contract progress payment will be based on the percent of the original contract amount that is earned from other contract items, as follows:

   A. When 5% is earned, either 100% of the amount for mobilization or 5% of the original contract amount, whichever is the least;

   B. When all work is completed, amount of mobilization exceeding 5% of the original contract amount

   This schedule of mobilization progress payments will not limit or preclude progress payments otherwise provided by the contract.

2. Temporary Work Zone Traffic Control, Complete: Payment for planning and providing temporary traffic control for all work contemplated shall be on a lump sum basis. Lump sum price shall include furnishing and installing traffic control signage, temporary striping and delineators, providing traffic flagging as needed, and developing and submitting traffic control plans for review.

3. Cut-in Valve Reconnection: Payment for furnishing and installing cut-in valve reconnections as shown on Plans shall be on a per each unit price basis. Price shall include all work and materials required to sawcut existing pavement, excavate, shore and dewater for reconnection pit, cover pit with steel sheeting at the end of the work day/when not in use to allow traffic loading, furnishing and installing reconnection piping including fabricated steel piping, butterfly valve and dismantling joint, field welding to install butt strap connections and inspection and testing of field welds by independent weld inspector as required, lining and coating repairs at connection locations, crushed rock backfill and compaction of pit,temporary asphalt pavement restoration, and permanent asphalt pavement restoration as required after all pipeline testing has been completed.

4. CCTV Pipeline Joint Inspection: Payment for conducting CCTV pipeline joint inspection shall be on a lump sum basis and includes all work and materials required to cut existing steel pipe for camera insertion, inspect and record interior conditions of pipeline and locate joints as

specified. Lump sum price shall include all work and materials to disinfect CCTV equipment prior to its insertion into the potable water pipeline, and submittal of data and proposed restraint methods to the OWNER and ENGINEER for review.

5. Existing Joint Restraint – Reinforcing Rod: Payment for furnishing and installing restraint for existing steel transmission main pipe joint with reinforcing rod as shown on Plans shall be on a per each unit price basis. Price shall include all work and materials required to excavate pit and expose existing pipe joint for installation of reinforcing rod, removal of existing pipe coating at joint location, field welding and inspection and testing of field welds by independent weld inspector, coating repair with grout band, backfill and compaction of pit with excavated material after pipeline testing, and installation and removal of silt fence and other BMP's at each location to control erosion on the slope during work. Surface restoration shall be paid for under a separate bid item.

6. Existing Joint Restraint – Butt Strap: Payment for furnishing and installing restraint for existing steel transmission main pipe joint with butt strap as shown on Plans shall be on a per each unit price basis. Price shall include all work and materials required to excavate pit and expose existing pipe joint for installation of butt strap, cut-out, removal and disposal of existing pipe joint section, removal of existing pipe coating and surface preparation at butt strap fillet weld lap joint locations, field welding and inspection and testing of field welds by independent weld inspector, coating repair with grout band, backfill and compaction of pit with excavated material after pipeline testing, and installation and removal of silt fence and other BMP's at each location to control erosion on the slope during work. Surface restoration shall be paid for under a separate bid item.

7. Hydrostatic Testing, Flushing and Disinfection of Water Transmission Main: Payment for all hydrostatic testing and disinfection required per Section 33 13 00, Testing and Disinfection of Water Utility Piping shall be on a lump sum basis. The OWNER shall provide off-site bacteriological laboratory analysis. Payment for any bacteriological retesting shall be paid by the CONTRACTOR.

8. Exploratory Excavation for Anchor Block: Payment for completing exploratory excavation for determining whether or not to install reinforced concrete anchor block shall be on a lump sum basis. The lump sum price shall include saw cutting and excavation at anchor block location shown on Plans to a depth roughly equal to three (3) feet below the bottom of the existing 24-inch transmission main and shall include installation and shoring as required to keep exploratory trench open to depth specified, backfill and compaction with suitable excavated material, and crushed rock road base and asphalt pavement restoration as required. Contractor to assume anchor block will not be installed for restoration costs associated with lump sum bid price and if Owner decides to have Contractor install anchor block, any overlapping work is to be reflected in price provided for Bid Item #9 below.

9. Reinforced Concrete Anchor Block: Payment for furnishing and installing reinforced concrete anchor block on 24-inch transmission main as shown on the Plans shall be on a lump sum basis. The lump sum price shall include saw cutting, excavation, shoring and form

work as required, removal of mortar coating and preparation of existing steel pipe surface for install of reinforcing wrapper plate with cast-in flange, install of wrapper plate and flange including welding and weld testing as required, steel reinforcement and cast-in-place concrete, and crushed rock road base and asphalt pavement restoration as required. All overlapping work to install reinforced concrete anchor block completed as part of Bid Item #8 shall be paid for under that bid item.

10. Rock Removal: Payment for rock removal will be made at the unit price per cubic yard of rock excavated and will be paid for in addition to the bid price for other items involving excavation. Pay limits for rock removal shall be to the depth and widths as necessary to complete installation of piping, including welding for cut-in valve connections and existing steel pipe joint restraining, and installation of reinforced concrete anchor block to dimensions shown on the Plans. No payment will be made for rock removal beyond these limits. Rock removal is defined in Section 31 23 18, Rock Removal. CONTRACTOR's attention is directed to Section 01 10 00, Summary of Work, which presents requirements related to CONTRACTOR's use of explosives.

11. General Surface Restoration: Payment for general surface restoration other than that included in other bid items including stripping and stockpiling topsoil, regrading to original contours, bark mulching planting areas, hydroseeding, and cleanup following construction as required including resurfacing gravel surfaces as required, will be on a lump sum basis.

END OF SECTION

SECTION 01 33 00

SUBMITTAL PROCEDURES

PART 1 GENERAL

1.1 SUMMARY

A. This Section expands administrative and procedural requirements for submittals for review, information, and for Project closeout.

B. Section includes:

1. Contractor review.
2. Engineer review.
3. Submittal procedures.
4. Product data.
5. Shop Drawings.
6. Samples.
7. Design data.
8. Test reports.
9. Certificates.
10. Manufacturer's instructions.
11. Manufacturer's field reports.
12. Erection Drawings.
13. Construction progress schedules.
14. Breakdown of contract price.
15. Proposed product list.
16. Public Health & Safety Plan.
17. Construction photographs.
18. Close out submittals.

1.2 DEFINITIONS

A. Action Submittals: Written and graphic information and physical samples that require Engineer's responsive action.

B. Informational Submittals: Written and graphic information and physical Samples that do not require Engineer's responsive action. Submittals may be rejected for not complying with requirements.

1.3 CONTRACTOR REVIEW

A. Review for compliance with Contract Documents and approve submittals before transmitting to Engineer.

B. Contractor: Responsible for:

1. Determination and verification of materials including manufacturer's catalog numbers.

2. Determination and verification of field measurements and field construction criteria.

3. Checking and coordinating information in submittal with requirements of Work and of Contract Documents.

4. Determination of accuracy and completeness of dimensions and quantities.

5. Confirmation and coordination of dimensions and field conditions at Site.

6. Construction means, techniques, sequences, and procedures.

7. Safety precautions.

8. Coordination and performance of Work of all trades.

C. Stamp, sign or initial, and date each submittal to certify compliance with requirements of Contract Documents. Any submittals received by the Engineer which do not bear the Contractor’s approval or certification shall be returned without review.

D. When shop drawings and/or submittals are required to be revised or corrected and resubmitted, the Contractor shall make such revisions and/or corrections and resubmit those items or other materials in the same manner as specified above.

E. Regardless of corrections made in or review given to the drawings by the Engineer, the Contractor shall be responsible for the accuracy of such drawings and for their conformity to the Drawings and Specifications.

F. Do not fabricate products or begin Work for which submittals are required until approved submittals have been received from Engineer.

G. Materials and equipment shall be ordered a sufficient time in advance to allow time for reviews, and shall be available on the job when needed. Last minute review will not be given for inferior substitutes for material or equipment.

1.4 ENGINEER REVIEW

A. Do not make "mass submittals" to the Engineer. "Mass submittals" are defined as six or more submittals or items in one day or 20 or more submittals or items in one week. If "mass submittals" are received, Engineer's review time stated above will be extended

as necessary to perform proper review. Engineer will review "mass submittals" based on priority determined by Engineer after consultation with Owner and Contractor.

B. Informational submittals and other similar data are for Engineer's information, do not require Engineer's responsive action, and will not be reviewed or returned with comment.

C. The Engineer’s review of submittals and shop drawings is not a check of any dimension or quantity, and will not relieve the Contractor from responsibility for errors of any sort in the submittals and shop drawings.

D. Submittals made by Contractor that are not required by Contract Documents may be returned without action.

E. The Engineer will review the submitted data and shop drawings, and return to the Contractor with notations thereon indicating "No Exception Taken", "Make Corrections Noted", "Rejected", "Revise and Resubmit", or "Submit Specified Item".

F. If more than two (2) submissions are required to meet the Project specifications, Owner may withhold monies due to Contractor to cover additional costs of reviewing additional submissions beyond the second submittal review.

1.5 SUBMITTAL PROCEDURES

A. Transmit each submittal with Engineer-accepted transmittal form certifying compliance with requirements of Contract Documents.

B. Sequentially number transmittal forms. Mark revised submittals with original number and sequential alphabetic suffix.

C. Show each Submittal with numbering and tracking system approved by Engineer:

1. Submittals shall be numbered according to specification section. For example, the first product submittal for Section 055000 would be “055000-1”. Resubmittals of that submittal would be “055000-1.1”, followed by “055000-1.2”, and so on. The second product submittal for that Section would be “055000-2”.

2. Submittals containing product information from multiple sections of the specifications will not be reviewed. Contractor and/or their supplier shall divide submittals in a manner that meets the numbering and tracking system requirements stated herein.

3. Alternative method of numbering may be accepted as approved by Engineer.

D. Identify: Project, Contractor, Subcontractor and supplier, pertinent Drawing and detail number, and Specification Section number appropriate to submittal.

E. Apply Contractor's stamp, signed or initialed, certifying that review, approval, verification of products required, field dimensions, adjacent construction Work, and coordination of information is according to requirements of the Work and Contract Documents.

F. Schedule submittals to expedite Project, and submit electronic submittals via email as PDF electronic files.

G. Coordinate submission of related items.

1. All shop drawings for interrelated items shall be scheduled for submission at the same time.

2. The Engineer may hold shop drawings in cases where partial submission cannot be reviewed until the complete submission has been received or where shop drawings cannot be reviewed until correlated items affected by them have been received. When such shop drawings are held, the Engineer will advise the Contractor in writing that the shop drawing submitted will not be reviewed until shop drawings for all related items have been received.

H. When hard copies of submittals are provided by the Contractor, six (6) copies of all materials shall be provided to the Engineer. Two (2) copies of reviewed submittals will be kept by the Engineer, two (2) copies of reviewed submittals will be transmitted to the Owner, and two (2) copies of reviewed submittals will be returned to the Contractor. If the Contractor requests that more than two (2) copies of the reviewed submittal be returned, then the Contractor shall submit the appropriate quantity of submittals.

I. For each submittal for review, allow not less than 14 days for Engineer review, excluding delivery time to and from Contractor.

J. Identify variations in Contract Documents and product or system limitations that may be detrimental to successful performance of completed Work.

K. Allow space on submittals for Contractor and Engineer review stamps or comments.

L. When revised for resubmission, the Contractor shall identify changes made since previous submission. A narrative of changes shall be provided, and shop drawings or calculations shall indicate that a revision was made.

M. Distribute copies of reviewed submittals as appropriate. Instruct parties to promptly report inability to comply with requirements.

N. Submittals not requested will not be recognized nor processed.

O. Incomplete Submittals: Engineer will not review. Complete submittals for each item are required. Delays resulting from incomplete submittals are not the responsibility of Engineer.

1.6 PRODUCT DATA

A. Product Data: Action Submittal: Submit to Engineer for review for assessing conformance with information given and design concept expressed in Contract Documents. Submitted data shall be sufficient in detail for determination of compliance with the Contract Documents.

B. Mark each copy to identify applicable products, models, options, and other data. Supplement manufacturers' standard data to provide information specific to this Project.

1. Note submittal will be returned to Contractor without review of submittal if products, models, options and other data are not clearly marked or identified.

C. Indicate product utility and electrical characteristics, utility connection requirements, and location of utility outlets for service for functional equipment and appliances.

D. After review, produce copies and distribute according to "Submittal Procedures" Article and for record documents.

1.7 SHOP DRAWINGS

A. Shop Drawings: Action Submittal: Submit to Engineer for assessing conformance with information given and design concept expressed in Contract Documents.

B. Indicate special utility and electrical characteristics, utility connection requirements, and location of utility outlets for service for functional equipment and appliances.

C. When required by individual Specification Sections, provide Shop Drawings signed and sealed by a professional Engineer licensed in the state of Project responsible for designing components shown on Shop Drawings.

1. Include signed and sealed calculations to support design.

2. Submit Shop Drawings and calculations in form suitable for submission to and approval by authorities having jurisdiction.

3. Make revisions and provide additional information when required by authorities having jurisdiction.

D. Submit electronic submittals via email as PDF electronic files.

E. All dimensioned shop drawings shall be scalable and provided as full-sized (22” x 34”) sheets. PDF electronic files shall print as scalable full-sized sheets.

F. After review, produce copies and distribute according to "Submittal Procedures" Article and for record documents.

1.8 SAMPLES

A. Samples: Action Submittal: Submit to Engineer for assessing conformance with information given and design concept expressed in Contract Documents.

B. Samples for Selection as Specified in Product Sections:

1. Submit to Engineer for aesthetic, color, and finish selection.
2. Submit Samples of finishes, textures, and patterns for Owner selection.

C. Submit Samples to illustrate functional and aesthetic characteristics of products, with integral parts and attachment devices. Coordinate Sample submittals for interfacing work.

D. Include identification on each Sample, with full Project information.

E. Submit number of Samples specified in individual Specification Sections; Engineer will retain one Sample.

F. Reviewed Samples that may be used in the Work are indicated in individual Specification Sections.

G. After review, produce copies and distribute according to "Submittal Procedures" Article and for record documents.

1.9 DESIGN DATA

A. Informational Submittal: Submit data for Engineer's knowledge as Contract administrator or for Owner.

B. Submit information for assessing conformance with information given and design concept expressed in Contract Documents.

1.10 TEST REPORTS

A. Informational Submittal: Submit reports for Engineer's knowledge and records as Contract administrator or for Owner.

B. Submit test reports for information for assessing conformance with information given and design concept expressed in Contract Documents.

1.11 CERTIFICATES

A. Informational Submittal: Submit certification by manufacturer, installation/application Subcontractor, or Contractor to Engineer, in quantities specified for Product Data.

B. Indicate material or product conforms to or exceeds specified requirements. Submit supporting reference data, affidavits, and certifications as appropriate.

C. Certificates may be recent or previous test results on material or product but must be acceptable to Engineer.

1.12 MANUFACTURER'S INSTRUCTIONS

A. Informational Submittal: Submit manufacturer's installation instructions for Engineer's knowledge as Contract administrator or for Owner.

B. Submit printed instructions for delivery, storage, assembly, installation, adjusting, and finishing, to Engineer in quantities specified for Product Data.

C. Indicate special procedures, perimeter conditions requiring special attention, and special environmental criteria required for application or installation.

1.13 MANUFACTURER'S FIELD REPORTS

A. Informational Submittal: Submit reports for Engineer's knowledge and records as Contract administrator or for Owner.

B. Submit report within 48 hours of observation to Engineer for information.

C. Submit reports for information for assessing conformance with information given and design concept expressed in Contract Documents.

1.14 ERECTION DRAWINGS

A. Informational Submittal: Submit Drawings for Engineer's knowledge and records as Contract administrator or for Owner.

B. Submit Drawings for information assessing conformance with information given and design concept expressed in Contract Documents.

C. Data indicating inappropriate or unacceptable Work may be subject to action by Engineer or Owner.

PART 2 PRODUCTS

2.1 CONSTRUCTION PROGRESS SCHEDULES

A. Within seven (7) days after date of Notice to Proceed, prepare and submit to the Engineer a practicable schedule showing the order in which the Contractor proposes to carry out the Work, the dates on which the important features of the work will start, and the contemplated dates for completing same. In addition to a time-scaled bar chart schedule depicting the project critical path, the Contractor shall submit a detailed CPM logic diagram. The CPM diagram and time-scaled bar chart shall include the following:

- Construction activities
- Submittal and approval of material samples and shop drawings
- Procurement of critical materials
- Fabrication, installation, and testing of special material and equipment
- Duration of work, including completion times of all stages and their sub-phases

The activities shall be separately identifiable by coding or use of sub-networks or both. The duration of each activity shall be verifiable by manpower and equipment allocation, in common units of measure, or by delivery dates and shall be justifiable by the Contractor upon the request of the Engineer.

Detailed subnetworks will include all necessary activities and logic connectors to describe the work and all restrictions to it. In the restraints, include those activities from the project schedule which initiated the subnetwork as well as those restrained by it.

Include a tabulation of each activity in the computer mathematical analysis of the network diagram. Furnish the following information as a minimum for each activity:

- Event (node) number(s) for each activity
- Activity description
- Original duration of activities (in normal workdays)
- Estimated remaining duration of activities (in normal workdays)
- Earliest start date or actual start date (by calendar date)
- Earliest finish date or actual finish date (by calendar date)
- Latest start date (by calendar date)
- Latest finish date (by calendar date)
- Slack or float time (in workdays)

Computer printouts shall consist of at least a node sort and an “early start/total-float” sort.

B. Attention is drawn to typical local climatic weather patterns and Work shall be coordinated accordingly.

C. Three Week Lookahead Schedules: Provide each week at the weekly construction meeting. The previous week's completed work shall be shown on the schedule for a total of 4 weeks shown.

2.2 PROPOSED PRODUCT LIST

A. Within 14 days after date of Notice to Proceed, prepare and submit to the Engineer list of major products proposed for use, with specification section reference, name of manufacturer, supplier, trade name, subcontractor and model number of each product. Provide a schedule of specific target dates for the submission and return of submittals and shop drawings required by the contract documents.

B. For products specified only by reference standards, indicate manufacturer, trade name, model or catalog designation, and reference standards.

C. The list and schedule shall be updated and re-submitted when requested by the Engineer.

2.3 BREAKDOWN OF CONTRACT PRICE

A. At or before the preconstruction meeting, submit a complete breakdown of all lump sum bid items showing the value assigned to each part of the work, including an allowance for profit and overhead adding up to the total lump sum contract price.

B. Breakdown of lump sum bids shall be coordinated with the items in the schedule and shall be in sufficient detail to serve as the basis for progress payments during construction.

C. Engineer will review the contract price breakdown and may request items to be further broken down or for more items be added in order to facilitate tracking of work progress for payment.

D. Preparatory work, bonds, and insurance required in setting up the job will be allowed as a separate entry on the cost breakdown but shall not exceed 5 percent of the total base bid.

E. Upon acceptance of the breakdown of the contract price by the Engineer, it shall be used as the basis for all requests for payment.

2.4 PUBLIC SAFETY AND CONVENIENCE

A. <u>Project Health and Safety Plan:</u>

1. Develop, publish, and implement an overall Project Health and Safety Program for the Project. This Program shall conform to all applicable codes. The written Safety Program shall be provided within thirty (30) days after the receipt of the written

Notice to Proceed. The Plan shall be assembled to address project specific health and safety issues to both the public and on-site personnel. The plan shall include the following items when they apply:

- Employee orientation
- Safety inspections
- Instruction and training
- Accident reporting
- Signs and barricades
- Fire prevention and protection
- Welding, cutting and burning
- Painting and surface treatment
- Electricity
- Machinery and mechanized equipment
- Excavations
- Sanitation
- Chlorine safety
- Hazardous materials
- Hazardous communications program
- Job hazard analysis
- First aid/medical facilities
- Personal protective equipment
- Confined space entry plan
- Shoring plan
- Fall protection plan
- Emergency Action Plan
- Housekeeping
- Safety training requirements and certification
- Pedestrian access around work site during construction and after hours

2. If the project requires other health and safety issues to be addressed, they too shall be included in the Project Health and Safety Plan. The Program shall subsequently be distributed to and implemented by the Contractor's personnel, as well as its Subcontractors and Suppliers. Contractor shall fully implement and comply with the Safety Program and shall submit to the Owner a letter signed by Contractor's owner/president affirming such implementation and compliance within fifteen (15) days after on-site work has started. Contractor shall notify the Owner when safety meeting will be held so that Owner's personnel may attend. A copy of the approved Health and Safety Plan must be maintained on-site at all times during the life of the Project.

2.5 CONSTRUCTION PHOTOGRAPHS

A. Provide photographs of Site and construction throughout progress of Work produced by an experienced photographer acceptable to Engineer.

B. Each month submit photographs with Application for Payment.

C. Photographs: Electronic, PDF or JPEG format.

D. Take two Site photographs from different directions, five days maximum before submitting.

E. Identify each photo in the electronic file name. Identify name of Project, phase, orientation of view, date and time of view.

F. Digital Images: Deliver complete set of digital image electronic files on CD-ROM to Owner with Project record documents. Identify electronic media with date photographs were taken. Submit images that have same aspect ratio as sensor, uncropped.

1. Digital Images: Uncompressed TIFF format, produced by digital camera with minimum sensor size of 4.0 megapixels, and image resolution of not less than 1024 by 768 pixels.

2. Date and Time: Include date and time in filename for each image.

2.6 CLOSE OUT SUBMITTALS

A. Record Drawings

1. Provide record drawings for project in accordance with Section 01 10 00, Summary of Work.

PART 3 EXECUTION - Not Used

END OF SECTION

SECTION 01 45 00

QUALITY CONTROL

PART 1 GENERAL

1.1 DESCRIPTION

A. This Section covers quality control requirements supplementary to those of the General Conditions and Technical Specifications.

1.2 PROVISIONS

A. Contractor's Responsibility for Testing

The CONTRACTOR shall be responsible for the cost of all testing as specified in this section. Additional information has been provided regarding the payment responsibility for the OWNER with regards to the Project.

B. OWNER's Right to Perform Additional Tests

The OWNER or ENGINEER reserves the right to complete additional testing. In such cases, the CONTRACTOR shall provide safe access for the OWNER or ENGINEER and their inspectors to adequately inspect the quality of work and the conformance with project specifications.

1.3 QUALITY ASSURANCE

A. Testing Requirements

An independently owned and operated laboratory or agency approved by the ENGINEER shall perform all testing as specified herein.

B. Testing

1. General

a. All required testing of work and/or materials shall be conducted in the presence of the ENGINEER. The CONTRACTOR shall provide forty-eight (48) hour notification to the OWNER and OWNER's REPRESENTATIVE prior to conducting any and all quality assurance testing. Where applicable, work and materials shall only be buried with the consent of the ENGINEER.

b. Where such inspection and testing are to be conducted by an independent laboratory or agency, the sample or samples of material to be tested shall be

selected by such laboratory or agency or by the ENGINEER. The CONTRACTOR shall furnish such samples of all materials without charge to OWNER.

c. The results from any and all tests are made for the information of the OWNER. Regardless of any test results, the CONTRACTOR is solely responsible for the quality of workmanship and materials and for compliance with the requirements of the Drawings and Specifications.

2. Costs of Testing

a. The CONTRACTOR shall be responsible for and shall pay for all tests as specified in Part 3 of this Section. Additional information has been provided regarding the payment responsibility for the OWNER with regards to the Project.

b. With regards to all materials to be tested, where test results demonstrate that the material or workmanship does not meet the minimum requirements of the Contract Documents, additional testing shall be completed and shall be paid for by the CONTRACTOR with no reimbursement by the OWNER.

1.4 SPECIAL INSPECTIONS

Special inspections and testing as required per Contract Specifications shall be conducted by OWNER-approved Special Inspectors and Testing Agencies as required and as indicated in the Contract Documents.

A. Special Inspectors and Testing Agencies Responsibilities

1. Verify that manufacturers maintain detailed fabrication and quality control procedures and review the completeness and adequacy of those procedures to perform the Work.

2. Promptly notify OWNER and CONTRACTOR of irregularities and deficiencies observed in the Work during performance of their services.

3. Submit certified written report of each test, inspection and similar quality control service to OWNER, CONTRACTOR and jurisdictional authorities. Interpret test results and inspections and state in each report whether tested and inspected work complies with or deviates from the Contract Documents.

4. Submit final report of special inspections at Substantial Completion, including a list of unresolved deficiencies.

5. Re-test and re-inspect corrected work.

B. CONTRACTOR'S Responsibilities

1. Provide quality requirements to all subcontractors and enforce all requirements.

2. Notify OWNER, ENGINEER, Special Inspectors and Testing Agencies at least 48 hours in advance of time when Work that requires testing or special inspecting will be performed, unless otherwise indicated in the Contract Documents.

3. Pay for any re-testing by Testing Agencies for replacement work resulting from work that failed to comply with the Contract Documents. OWNER will deduct such costs from the Contract Price as necessary.

4. Submit copies of licenses, certifications, correspondence, records and similar documents used to establish compliance with standards and regulations that pertain to performance of the Work to the OWNER, ENGINEER and Special Inspectors.

5. Where Special Inspection requires pre-construction testing for compliance with specified requirements for performance and test methods, comply with the following:

    a. Provide test specimens representative of proposed products and construction in a timely manner with sufficient time for testing and analyzing results to prevent delaying the Work.

    b. Provide information on configurations of test assemblies, testing procedures and laboratory test records to adequately demonstrate capability of products to comply with performance requirements.

6. Cooperate with Agencies performing required tests, special inspections and similar quality control services. Notify Agencies in advance of operations to permit assignment of personnel. Provide the following:

    a. Access to the Work.

    b. Incidental labor, equipment and materials necessary to facilitate tests and special inspections.

    c. Adequate quantities of representative samples of materials that require testing and inspecting. Assist Agencies in obtaining samples.

    d. Provide facilities for storage and field curing of test samples.

    e. Deliver samples to Testing Agencies.

7. Coordinate sequence of activities to accommodate required quality-assurance and control services with a minimum of delay and to avoid necessity of removing and replacing construction to accommodate testing and special inspecting.

8. Schedule times for tests, special inspections, obtaining samples and similar activities. Distribute schedule to OWNER, ENGINEER, Special Inspectors, Testing Agencies and each party involved in portions of the work where tests and special inspections are required.

1.5 SUBMITTALS

A. Laboratory Test or Inspection Reports

Each report shall be signed and certified by the independently owned and operated testing laboratory. Unless otherwise specified, submit three (3) copies of each report to the OWNER or OWNER's REPRESENTATIVE.

PART 2 PRODUCTS

NOT USED

PART 3 EXECUTION

3.1 FIELD TESTING SCHEDULE

A. The CONTRACTOR shall complete field testing in accordance with the following schedule. Additional source material testing shall be completed as necessary to establish the basis of field tests. The frequency of testing listed in this schedule lists the minimum number of tests per quantity of work completed by the CONTRACTOR. Testing locations to be determined by the ENGINEER.

Material to be Tested	Payment Responsibility for Initial Testing	Minimum Testing Frequency
Trench Backfill	CONTRACTOR	In-place compaction testing (w/ nuclear compaction gage) performed at 2-foot elevation increments, one test per 200 lineal feet of pipeline trench as measured along pipe centerline. ENGINEER may reduce frequency to one test per lift for every 1,500 lineal feet of pipeline trench when satisfied with CONTRACTOR's method of compaction. See Article 3.16, Field Quality Control of Section 31 23 17, Trenching for further details.
Asphalt Concrete	CONTRACTOR	As required when placed. See detailed requirements in Article 3.3, Field Quality Control of Section 32 12 16, Asphalt Paving.

Concrete	CONTRACTOR	As required when placed. See detailed requirements in Article 3.14 of Section 03 11 00, Concrete Work.
Waterline – Hydrostatic testing	CONTRACTOR	As required. See Section 33 13 00, Testing & Disinfection of Water Utility Piping.
Waterline – Initial Bacteriological Testing	OWNER	As required. See Section 33 13 00, Testing & Disinfection of Water Utility Piping. Subsequent testing due to failed initial tests to be paid for by the Contractor.
Welded Steel Pipeline – Field Joint Welds	CONTRACTOR	As required for all field welded joints. See Section 33 11 10.30 – Steel Water Utility Transmission Piping.

END OF SECTION

SECTION 01 56 39

TEMPORARY TREE AND PLANT PROTECTION

PART 1 GENERAL

1.1 SUMMARY

A. This Section includes provisions for temporary protection of trees and other plant life in preparation for site or building excavation Work.

B. Related Sections:

1. Section 31 10 00 - Site Clearing.
2. Section 31 22 13 - Rough Grading.
3. Section 31 23 16 - Excavation.
4. Section 31 23 17 - Trenching.

C. This specification shall be applied concurrently and in conjunction with other plant material protection measures herein described and specified.

PART 2 MATERIALS - Not Used

PART 3 EXECUTION

3.1 INSPECTION

A. Inspect all trees specified on the Drawings for protection prior to construction.

1. Document with written memorandum and photographs any unusual conditions.

2. Submit copies of documentation to ENGINEER prior to beginning work.

B. Verify all conditions on the Drawings with actual conditions at Site regarding tree protection prior to any site disturbance.

C. The ENGINEER must be present during demolition of existing conditions occurring within the drip line of trees designated to remain.

D. Notify ENGINEER 24 hours prior to inspections and/or tagging of protected trees.

3.2 PROTECTION

A. Install barricades specified in the Drawings at drip lines of trees designated to remain prior to the commencement of construction.

B. Clearly designate protected trees and clear of any material storage, personnel, or vehicular movement.

C. Provide temporary fencing, barricades, and guards as necessary or required to protect trees designated on the Drawings to remain, from damage above and below grade.

D. Protect root systems of trees and plant life to remain.

1. Protect from damage due to noxious materials in solution caused by runoff or spillage during mixing and placement of construction materials.

2. Protect from flooding, erosion, or excessive wetting resulting from dewatering operations and compaction.

3. Protect against unauthorized cutting, breaking, skinning roots and branches, or bruising bark.

4. Protect from smothering and compaction.

a. Do not store construction materials or permit vehicles to drive or park within the drip line area of any tree to remain.

5. Protect from dumping of refuse in close proximity.

E. Where cutting is necessary, review conditions with the ENGINEER before proceeding, and comply with directives of ENGINEER.

3.3 EXCAVATION AROUND TREES

A. Excavate within drip lines of trees only where indicated on the Drawings or as directed by ENGINEER.

B. Where trenching for utilities is required within drip lines, tunnel under or around roots by hand excavating.

1. Where possible trench toward trunk of tree and tunnel under central root mass to avoid severing all lateral roots on side of trench.

2. Do not cut main lateral roots or tap roots over one inch in diameter.

3. Temporarily support and protect trees from damage until permanently covered with approved backfill.

C. Do not allow exposed roots to dry out before backfill is placed.

1. Provide temporary earth or burlap cover.

2. Water roots daily when exposed and maintain in a moist condition.

D. Backfill roots only upon inspection approval from the ENGINEER.

1. Backfill around root excavations only with clean imported topsoil free from materials deleterious to root growth.

2. Backfill to eliminate voids and compact only by means of manual tamping at root areas.

3. Water sufficiently to settle topsoil and eliminate voids or air pockets around roots.

4. Allow for natural settlement of soil surface, and furnish and apply topsoil sufficient to bring to original finish grade after backfill settlement.

E. If during excavation, any condition arises that threatens the survivability of the protected tree, or an unknown condition arises that affects the stability or integrity of the root system, notify the ENGINEER immediately.

3.4 REPAIR AND REPLACEMENT OF DAMAGED TREES

A. In the event of damage to existing trees:

1. Immediately prune limbs smaller than 3" caliper or roots smaller than 2" caliper to repair trees damaged by construction operations.

2. Make repairs promptly after damage occurs to prevent progressive deterioration of damaged trees.

3. Any such pruning and/or repairs shall be approved in advance and at completion by ENGINEER.

4. The ENGINEER shall reserve the right, at cost to the CONTRACTOR, to obtain the services of a Certified Consulting Arborist with current membership in the American Society of Consulting Arborists to determine the severity of damage.

5. The CONTRACTOR is responsible for the cost of repairs caused by their actions or by the actions of subcontractors engaged by the CONTRACTOR.

B. Remove and replace dead or damaged trees which are determined by the ENGINEER to be incapable of restoration to normal growth patterns at no additional cost to OWNER.

1. Provide new trees of the same species as those removed or damaged, with size and/or quantity to be determined by ENGINEER.

2. Furnish replacement trees and plant life to the Site and plant, maintain, and warranty as directed by the ENGINEER.

3. If trees are not replaceable with the same species, and size, compensate the OWNER for the replacement cost of the trees based on the evaluation of a Certified Consulting Arborist.

4. The CONTRACTOR is responsible for additional costs of removing damaged trees and labor for planting new specimens.

3.5 DESIGNATED TREE REMOVAL PROCEDURES

A. If designated tree removal is specified by ENGINEER, furnish labor, material, and equipment necessary for removing and/or salvaging existing trees, if necessary, as designated on the Drawings for removal.

1. Verify location and species with ENGINEER prior to removal.

B. Salable logs or timber may be sold to CONTRACTOR's benefit upon notification and prior approval of OWNER. Upon approval, remove salable logs or timber promptly from site.

3.6 DESIGNATED TREE TRANSPLANTING PROCEDURES

A. If designated tree transplanting is specified by ENGINEER, verify and identify existing trees to be transplanted.

B. All work shall be in accordance with the standards and practices outlined in the following: Tree and Shrub Transplanting Manual, E.B. Himelick, 1981 Ed., International Society of Arboriculture.

C. Prior to commencement of Work, submit a coordination schedule, method of transplanting, traffic control, routing, etc., to ENGINEER, for review and approval.

D. Warranty for transplanted trees shall be determined and directed on a case by case basis by the ENGINEER, upon contracting of specified transplanting work.

E. Review and verify location of utilities in area of operation. Obtain location and jurisdictional approval from utilities prior to transplanting activities. Protect utilities and the public at all times.

F. Prior to transplanting, spray trees with an anti-desiccant emulsion-type film forming agent, "Dowax" by Dow Chemical Company, "Wilt-Pruf" by Nursery Specialty Products Inc., "D-Wax", by Plant Products Inc., or approved equal, prior to digging with two separate applications allowing 48 hours apart. Use a power sprayer to provide an

adequate film over trunks, branches, stems, twigs, and foliage. Anti-desiccant must be dry prior to relocation.

G. Dig, ball and burlap, and move designated trees for relocation to the new planting location shown on the Drawings. In the event the new planting area is not prepared, place tree in a storage area approved by the ENGINEER solely designated for healing-in of plant materials until final planting may occur. Brace in a vertical position, provide shade, wind protection, and irrigation at plant storage area. Utilize all horticulturally proper methods for plant storage. Plants shall be maintained by CONTRACTOR while in storage.

3.7 GRADING AND FILLING AROUND TREES

A. Maintain existing grade within drip line of trees unless otherwise indicated on the Drawings or directed by the ENGINEER.

3.8 MAINTENANCE OF PROTECTIVE MEASURES

A. Maintain protective measures throughout the construction process. Immediately repair any alteration to protection measures throughout construction process. Repair or reinstall protective measures immediately upon alteration. Monitor protective measures daily.

B. Remove and clear area of debris and fencing, barricades, etc., upon final written approval of ENGINEER.

END OF SECTION

SECTION 02 41 00

DEMOLITION

PART 1 GENERAL

1.1 SUMMARY

A. Section Includes:

1. Demolition and removal of existing facilities.
2. Abandoning and removing utilities.

B. Related Sections:

1. Section 31 05 16 - Aggregates for Earthwork.
2. Section 31 10 00 - Site Clearing.
3. Section 31 22 13 - Rough Grading.
4. Section 31 23 16 - Excavation.
5. Section 33 11 50 - Existing Pipe Abandonment.

1.2 SUBMITTALS

A. Section 01 33 00 - Submittal Procedures: Requirements for submittals.

B. Submit to Engineer a copy of written permission of private property owners, with copy of fill permit for said private property, as may be required for disposal of materials.

1.3 QUALITY ASSURANCE

A. Existing Conditions: Determine the extent of work required and limitations before proceeding with Work.

B. Conform to applicable local, state and federal codes for environmental requirements in relation to disposal of debris.

1. Burning at the Site for the disposal of refuse, debris, and waste materials resulting from demolition and site clearing operations shall not be permitted.

C. Permits: The Contractor is responsible for obtaining all necessary permits required for completion of the Work described in this Section.

D. Protection of Persons and Property: Meet all federal, state and local safety requirements for the protection of workmen, other persons, and property in the vicinity of the Work and requirements of the General Provisions.

E. If the existing material to be demolished and removed contains any hazardous materials which will require special handling upon removal, such as asbestos or lead, it is the responsibility of the Contractor to remove and dispose of the material in accordance with all applicable federal, state and local regulations.

PART 2 PRODUCTS

2.1 MATERIALS

A. Existing Materials: All materials, equipment, miscellaneous items and debris involved, occurring or resulting from demolition, clearing and grubbing work shall become the property of the Contractor at the place of origin, except as otherwise indicated in the Drawings or Specifications.

B. Crushed Rock: As specified in Section 31 05 16-2.1, Aggregates for Earthwork. Of the size shown in the Drawings or specified herein.

C. Sand: As specified in Section 31 05 16-2.2, Aggregates for Earthwork.

PART 3 EXECUTION

3.1 EXAMINATION

A. The Owner assumes no responsibility for the actual condition of the facilities to be demolished. The Contractor shall visit the site, inspect all facilities and be familiar with all existing conditions and utilities.

B. Demolition drawings identify major equipment and structures to be demolished only. Auxiliary utilities such as water, air, chemicals, drainage, lubrication oil, hydraulic power fluid, electrical wiring, controls, and instrumentation are not necessarily shown shall be considered incidental to all demolition work.

C. Identify waste and salvage areas for placing removed materials.

3.2 PREPARATION

A. Carefully coordinate the work of this Section with all other work and construction.

B. Call Local Utility Line Information service at 1-800-332-2344, not less than three working days before performing Work.

C. 1-800-332-2344, Oregon

1. Request underground utilities to be located and marked within and surrounding construction areas.

2. Disconnect or arrange for disconnection of utilities (if any) affected by required work.

3. Keep all active utilities intact and in continuous operations.

3.3 PROTECTION

A. Utilities: Locate, identify, and protect utilities located by utilities and indicated in the Drawings to remain from damage.

B. Survey control: Protect bench marks, survey control points, and existing structures from damage or displacement.

C. Preservation and Trimming of Trees, Shrubs and Other Vegetation: As specified in Section 31 10 00-3.4.C, Site Clearing.

D. Landscaped Areas: Protect existing landscaped areas as specified in Section 31 10 00-3.4.D, Site Clearing.

E. Miscellaneous Site Features: Protect all existing miscellaneous site features from damage by excavating equipment and vehicular traffic, including but not limited to existing structures, fences, mailboxes, sidewalks, paving, guy wires, utility poles, and curbs.

F. Repair and Replacement:

1. Damaged items, including but not restricted to those noted above, shall be repaired or replaced with new materials as required to restore damaged items or surfaces to a condition equal to and matching that existing prior to damage or start of Work of this contract.

2. Any damage to existing facilities or utilities to remain as caused by the Contractor's operations shall be repaired at the Contractor's expense.

3.4 DEMOLITION

A. Areas which are to be excavated for the purpose of demolition shall be cleared and stripped.

B. Carefully consider all bearing loads and capacities for placement of equipment and material on site. In the event of any questions as to whether an area to be loaded has adequate bearing capacity, consult with Engineer prior to the placement of such equipment or material.

C. Demolition of Existing Structures:

1. Excavate around existing structures as required to perform demolition operations and to plug associated existing pipelines where shown in the Drawing.

2. Provide shoring, bracing, and supports, as required, to insure adjacent structures are not damaged and structural elements of existing structure are not overloaded during demolition activities.

    a. Increase structural supports or adding new supports as may be required as a result of any cutting, removal, or demolition work performed under any part of this Contract.

    b. Remove all temporary protection when the Work is complete or when so authorized by the Engineer.

3. Any floors that are to remain in place shall be completely cracked through to allow for drainage. Cracking shall be accomplished by dropping a demolition ball or by other methods approved by the Engineer.

4. Remove and dispose of all exposed and/or protruding metalwork, piping, plumbing and conduits resulting from demolition activities, and all woodwork, roofing, and electrical and mechanical equipment removed from demolished structures.

    a. Reinforcing bars shall be cut flush with final wall elevations as shown in the Drawings.

    b. No detached metalwork, excluding concrete reinforcing bars, shall be buried with the concrete and masonry rubble.

D. Backfill at Demolished Structures:

1. For structures designated to be abandoned and/or demolished in place, concrete and/or masonry rubble and excavated soils resulting from demolition activities shall be used for backfill or placed in the bottoms of said structures only as directed by the Engineer.

2. Concrete and masonry rubble used for backfilling shall be broken into pieces no larger than 12 inches on any one side.

3. Materials resulting from abandonment / demolition activities approved for backfill shall be combined with imported filler sand to create a dense, compacted backfill.

4. Backfilling or placement of the excavated material in the structures shall meet the following requirements.

    a. Furnish, place and compact filler sand along with the concrete and masonry rubble so that all voids are filled and a dense, compacted backfill is obtained.

b. Filler sand shall be placed in horizontal layers completely filling all voids between pieces of rubble and not exceeding 12 inches in thickness.

c. Each layer of filler sand shall be compacted to obtain at least 90 percent of maximum density as determined by ASTM Method D-698-78 (AASHTO T-99).

d. Water shall be furnished by the Contractor and added to each layer as required to maintain optimum moisture content.

e. The amount of filler sand used shall only be the amount needed to fill all voids created by placement of the concrete and asphalt rubble, as directed by the Engineer.

f. At locations where concrete and masonry rubble is used for backfill, it shall be placed such that a minimum of 3 feet of compacted non-rubble backfill material (crushed rock) exists between any rubble and finished grade. Protruding reinforcing bars shall be cut to lengths that allow granular backfill to be placed and compacted to required levels in and above the rubble.

5. Disposal of all materials not used for backfill shall be performed off-site and in compliance with applicable local, state, and federal codes and requirements.

6. In areas where new construction will take place, no trace of these structures shall remain prior to placing of backfill.

E. Backfilling within the footprint of new structures with rubble material resulting from demolition activities will not be allowed.

F. All existing improvements designated in the Drawings or specified to be removed including but not limited to structures, pipelines, walls, footings, foundations, slabs, pavements, curbs, fencing and similar structures occurring above, at, or below existing ground surface shall be included in the demolition work.

G. Unless otherwise specified, any resulting voids shall be backfilled with suitable excavated or imported material compacted to the density of the adjacent soil.

3.5 EXISTING WATER UTILITY PIPING ABANDONMENT

A. As specified in Section 31 11 50, Existing Pipe Abandonment.

3.6 ELECTRICAL AND CONTROL SYSTEM DEMOLITION

A. All electrical and control system demolition work shall at all times be conducted in a safe and proper manner to avoid injury from electrical shock to all personnel.

1. Electrical equipment to be shut off for a period of time shall be tagged, locked out, and sealed with a crimped wire and lead seal and made inoperable.

2. At no time shall live electrical wiring or connections or those which can become energized be accessible to any persons without suitable protection or warning signs.

3.7 ASPHALTIC CONCRETE DEMOLITION

A. Asphalt pavement shall be removed to the limits shown in the Drawings.

B. The limits of the removal shall be saw cut.

C. Asphalt pavement may not be used as rubble fill.

3.8 REMOVAL

A. Remove debris, rock, excavated materials, rubble, abandoned piping and extracted plant life resulting from abandonment and/or demolition activities from site.

B. Continuously clean-up and remove waste materials from site. Do not allow materials to accumulate on site.

C. Removal: All material resulting from demolition, clearing and grubbing, and trimming operations shall be removed from the project site and disposed of in a lawful manner. Materials placed on property of private property owners shall be by written permission only.

3.9 GRADING

A. All grading work shall be completed in accordance with Section 31 22 13, Rough Grading.

3.10 CLEANUP:

A. During and upon completion of work, promptly remove all unused tools and equipment, surplus materials, debris, and dust and shall leave all areas affected by the work in a clean, condition, as may be subject to Engineer approval.

B. Adjacent structures shall be cleaned of dust, dirt and debris resulting from demolition.

C. Adjacent areas shall be returned to their existing condition prior to the start of work.

END OF SECTION

SECTION 03 11 00

CONCRETE WORK

PART 1 GENERAL

1.1 SUMMARY

A. The extent of concrete work is shown on the Drawings.

B. Work includes providing formwork and shoring for cast-in-place concrete and installation into formwork of items such as reinforcing steel bar (rebar), anchor bolts, setting plates, bearing plates, anchorages, inserts, reveals, frames, nosings, sleeves and other items to be embedded in concrete.

1.2 QUALITY ASSURANCE

A. Codes and Standards

Comply with the provisions of the following codes, specifications and standards, except as otherwise shown or specified here:

ACI 301 "Specifications for Structural Concrete for Buildings"

ACI 311 "Recommended Practice for Concrete Inspection"

ACI 318 "Building Code Requirements for Reinforced Concrete"

ACI 347 "Recommended Practice for Concrete Formwork"

ACI 304 "Recommended Practice for Measuring, Mixing, Transporting and Placing Concrete"

Concrete Reinforcing Steel Institute, "Manual of Standard Practice"

Comply with building code requirements which are more stringent than the above and all OSHA requirements.

B. American Society for Testing and Materials (ASTM)

1. C31, Making and Curing Concrete Test Specimens in the Field.

2. C33, Specification for Concrete Aggregate.

3. C39, Compressive Strength of Cylindrical Concrete Specimens.

4. C40, Organic Impurities in Fine Aggregate for Concrete.

5. C85, Cement Content of Hardened Portland Cement Concrete.

6. C88, Soundness of Aggregates by use of Sodium Sulfate or Magnesium Sulfate.

7. C94, Standard Specifications for Ready-Mixed Concrete.

8. C131, Resistance to Degradation of Small Size Coarse Aggregate by Abrasion and Impact in the Los Angeles Machine.

9. C136, Method for Sieve Analysis to Fine and Coarse Aggregate.

10. C143, Slump of Portland Cement Concrete.

11. C150, Standard Specification for Portland Cement.

12. C156, Water Retention by Concrete Curing Materials.

13. C173, Air Content of Freshly Mixed Concrete by the Volumetric Method.

14. C231, Air Content of Freshly Mixed Concrete by the Pressure Method.

15. C233, Standard Method of Testing Air-Entraining Admixtures for Concrete.

16. C260, Standard Specifications for Air-Entraining Admixtures for Concrete.

17. C289, Standard Test Method for Potential Reactivity of Aggregates (Chemical Method).

18. C441, Standard Test Method for Effectiveness of Mineral Admixtures in Preventing Excessive Expansion of Concrete Due to the Alkali-Aggregate Reaction.

19. C457, Microscopical Determination of Air-Void Content and Parameters of the Air-Void System in Hardened Concrete.

20. C494, Standard Specifications for Chemical Admixtures for Concrete.

21. C670, Preparing Precision Statements for Test Methods for Construction Materials.

22. C803, Penetration Resistance of Hardened Concrete.

C. Workmanship

The CONTRACTOR is responsible for correction of concrete work that does not conform to the specified requirements, including strength, tolerances and finishes. Correct deficient concrete as directed by the ENGINEER. The CONTRACTOR shall also be responsible for the cost of corrections to any other work affected by or resulting from

corrections to the concrete work.

D. Concrete Testing Service

The CONTRACTOR will engage a special inspector/testing laboratory to perform material evaluation tests. See detailed requirements in Part 3.14 “Quality Control Testing during Construction”. Per the OWNER or ENGINEER’s requirements the CONTRACTOR shall notify the designated representative to schedule the special inspections and materials testing required by the project documents.

E. Testing Requirements

Materials and installed work may require testing and retesting, as directed by the ENGINEER, at anytime during the progress of the work. Allow free access to material stockpiles and facilities at all times. All testing, including the retesting of rejected materials and installed work shall be done at the CONTRACTOR’s expense.

F. Tests for Concrete Materials

1. Test aggregates by the methods of sampling and testing of ASTM C33.

2. For Portland cement, sample the cement and determine the properties by the methods of test of ASTM C150.

3. Submit written reports to the ENGINEER, for each material sampled and tested prior to the start of work. Provide the project identification name and number, date of report, name of CONTRACTOR, name of concrete testing service, source of concrete aggregates, material manufacturer and brand name for manufactured materials, values specified in the referenced specification for each material, and test results. Indicate whether or not material is acceptable for intended use.

4. Certificates of material properties and compliance with specified requirements may be submitted in lieu of testing. The materials producer and the CONTRACTOR must sign certificates of compliance.

G. Allowable Tolerances:

1. Construct formwork to provide completed cast-in-place concrete surfaces complying with the tolerances specified in ACI 347, and as follows:

   a. Variation from plumb in lines and surfaces of columns, piers, walls and rises; 1/4-inch per 10 feet, but not more than 1-inch. For exposed corner columns, control joint grooves, and other conspicuous lines, 1/4-inch in any bay or 20 feet maximum; 1/2-inch maximum in 40 feet or more.

b. Variation from level or grade in slab soffits, ceilings, beam soffits, and rises 1/4-inch in 10 feet, 3/8-inch in any bay or 20 feet maximum, and 3/4-inch in 40 feet or more. For exposed lintels, sills, parapets, horizontal grooves and other conspicuous lines, 1/4-inch in any bay or 20 feet maximum and 1/2-inch in 40 feet or more.

c. Variation from position of the linear lines and related columns, walls, and partitions, 1/2-inch in any bay or 20 feet maximum, and 1-inch in 40 feet or more.

d. Variation in sizes and locations of sleeves, floor openings, and wall openings, 1/4-inch.

e. Variation in cross-sectional dimensions of columns and beams and thickness of slabs and walls, minus 1/4-inch and plus 1/2-inch.

f. Variations in footing plan dimensions, minus 1/2-inch and plus two (2) inches; misplacement or eccentricity, two (2) percent of the footing width in direction of misplacement but not more than two (2) inches; thickness reduction, minus five (5) percent.

g. Variation in steps - In a flight of stairs, 1/8-inch for rise and 1/4-inch for treads; in consecutive steps, 1/16-inch for rise and 1/8-inch for treads.

h. Circular structures shall be constructed in a true circular form, with maximum variation of 1/4-inch from the dimensions shown on the plans.

2. Before concrete placement check the lines and levels of erected formwork. Make corrections and adjustments to ensure proper size and location of concrete members and stability of forming systems.

3. During concrete placement check formwork and related supports to ensure that forms are not displaced and that completed work will be within specified tolerances.

H. Quality Control Testing During Construction

See Section 3 - Execution.

1.3 SUBMITTALS

A. For information only, submit manufacturer's data with application and installation instructions for proprietary materials and items, including reinforcement and forming accessories, admixtures, patching compounds, water stops, joint systems, chemical floor hardeners, dry-shake finish materials, and others. Bind and submit in one submittal.

B. Submit shop drawings for fabrication, bending and placement of concrete reinforcement. Comply with the ACE 315 “Manual of Standard Practice for Detailing Reinforced Concrete Structures” showing bar schedules, stirrup spacing, diagrams of bent bars, and arrangements of concrete reinforcement. Include special reinforcement required at openings through concrete structures.

C. Submit shop drawings for fabrication and erection of specific finished concrete surfaces as shown or specified. Show the general construction of forms including jointing, special formed joints or reveals, location and pattern of form tie placement, and other items which affect the exposed concrete visually. Submit form drawings for building columns, walls, fascias, and intersections, and concrete pan and joist system. Submit for typical sections only. ENGINEER’s review is for general architectural applications and features only. Design of formwork for structural stability and efficiency is the CONTRACTOR’s responsibility.

D. Submit laboratory test reports for concrete materials and mix design tests as specified.

E. Material Certificates may be provided in lieu of materials laboratory test reports. The material manufacturer and the CONTRACTOR, certifying that each material item complies with, or exceeds, the specified requirements shall sign material certificates.

1.4 CONCRETE MIX DESIGNS

A. All concrete materials shall be proportioned so as to produce a workable mixture in which the water content will not exceed the maximum specified.

B. If the concrete mix designs specified herein have not been used previously by the ready-mix supplier or if directed by the ENGINEER, mix proportions and concrete strength curves for regular cylinder tests, based on the relationship of 7, 14 and 28 day strengths versus slump values of two (2), four (4), and six (6) inches, all conforming to these Specifications, shall be established by an approved ready-mix supplier or an independent testing laboratory. A laboratory, independent of the ready-mix supplier, shall be required to prepare and test all concrete cylinders. The costs for preparation of mix designs (if required by the OWNER to be performed by an independent testing laboratory) and testing of concrete and materials shall be borne by the OWNER, except when materials do not meet specified requirements, in which case such costs shall be borne by the CONTRACTOR.

C. The exact proportions by weight of all materials entering into the concrete delivered to the jobsite shall conform to the approved mix design unless specifically so directed by the ENGINEER or Laboratory for improved specified strength or desired density, uniformity and workability.

D. The proportions of such mix design shall be based on a full cubic yard of hardened concrete.

E. Ready-mix companies or jobsite batch plants shall furnish delivery tickets, signed by a Certified Weighmaster, on which each shall state the weight of aggregates, sand, cement, admixtures and water and the number of cubic yards of concrete furnished, which will be compared against the approved mix design.

F. There shall be no variation in the weights and proportions of materials from the approved mix design.

G. There shall be no variation in the quality and source of materials once they have been approved for the specific mix design.

1.5 READY-MIXED CONCRETE

Ready-mixed concrete shall conform to the requirements of ACI 301 and ASTM C 94. In case of conflict, ACI 301 shall govern.

1.6 SAMPLE

CONTRACTOR shall pour and finish one 2-foot square exposed aggregate concrete sample for ENGINEER's approval prior to construction if exposed aggregate is included on job.

1.7 JOB CONDITIONS

Maintain continuous traffic control and access for vehicular and pedestrian traffic as required for other construction activities as well as to adjoining facilities for regular operation. Utilize flagmen, barricades, warning signs and warning lights as required, to maintain a safe entrance and passage on all roads or drives abutting the project.

PART 2 PRODUCTS

2.1 WALL FORMS

A. Full Height Pours: The wall form design shall be such that wall sections can be poured full height without creating horizontal cold joints and without causing snapping of form ties which shall be of sufficient strength and number to prevent spreading of the forms during the placement of concrete and which shall permit ready removal of the forms without spalling or damaging the concrete.

B. Wall Form Ties

1. Form ties which remain in the wall of a subgrade water-retaining structure shall have waterstops and a one inch minimum breakback or cone depth.

2. Snap ties, if used, shall not be broken until the concrete has reached the design concrete strength. Snap ties, designed so that the ends must be broken off before

the forms can be removed, shall not be used. The use of tie wires as form ties will not be permitted. Fully threaded stub bolts may be used in lieu of smooth ties with waterstops.

3. Taper ties with plastic or rubber plugs of an approved and proven design may also be used. The plugs must be driven into the hole with a steel rod, placed in a cylindrical recess made therefore in the plug. At no time shall plugs be driven on the flat area outside the cylindrical recess. Plugs shall be A-58 SURE PLUG as manufactured by DAYTON SUPERIOR, Santa Fe Springs, CA; phone: (714) 522-3442.

4. Ties shall positively secure the wall to the required dimension and hold the wall to that dimension prior to and during concrete placement.

C. Wall Form Stiffeners

1. Horizontal walers shall consist of structural steel channels, angles or tubing of adequate size to retain the concrete without deflecting.

2. The walers shall be rolled or welded to the proper radii or offset brackets shall be used for shaping the wall to the dimensions shown on the Drawings and shall be used both for inside and outside wall forms in direct contact with the wall panels and at vertical spacings of no more than 96 inches on center.

3. There shall be at least one such waler within 24 inches of the top and bottom of the wall.

4. The largest dimension of the steel waler shall be in the radial direction.

5. Vertical structural steel or wood members shall be used at a minimum horizontal spacing of 74 inches and shall have sufficient rigidity and strength to insure the proper vertical alignments with the aid of braces under all predictable stress conditions.

6. In lieu of the above, a different system and spacings may be used if it is satisfactorily demonstrated to the ENGINEER that it will be equally effective.

2.2 FORMS FOR UNEXPOSED FINISH CONCRETE

A. Form concrete surfaces which will be unexposed in finished structure with plywood, lumber, metal or other acceptable material. Provide lumber dressed on at least two (2) edges and one (1) side for tight fit.

2.3 FORM MATERIALS

A. Form Coatings

Provide commercial formulation form-coating compounds that will not bond with, stain nor adversely affect concrete surfaces, and will not impair subsequent treatments of concrete surfaces requiring bond or adhesion, nor impede wetting of surfaces to be cured with water or curing compound. Petroleum based coatings shall not be used for structures in creeks and waterways. Biodegradable coatings shall be used which will not contaminate the creeks/waterways or an alternate method for stripping the form shall be proposed.

B. Chamfers, Reveals, Drips

Provide preformed PVC or shaped wood or metal of size and profile as shown on drawings.

C. Inserts

Provide metal inserts for anchorage of materials or equipment to concrete construction, not supplied by other trades and as required for the work. Provide "Parabolt" by the Molly Company, "Phillips Red-Head", or "Burke" products. The CONTRACTOR is responsible for insuring that all required anchorage not specified in the project documents is installed per current building code and applicable ICC report requirements.

2.4 REINFORCING MATERIALS

A. Reinforcing Bar (rebar): ASTM A615 and as follows below>

Stirrups and Ties	Grade 60 (Grade 40 may be used for #3 and smaller)
All other Uses	Grade 60

B. Steel Wire: ASTM A82, plain, cold-drawn, steel.

C. Welded Wire Fabric (WWF): ASTM A185, welded steel wire fabric.

D. Supports for Reinforcement

Provide supports for reinforcement including bolsters, chairs, spacers and other devices for spacing, supporting and fastening reinforcing bars and welded wire fabric in place. Use wire bar type supports complying with CRSI recommendations, unless otherwise specified. Wood, brick, concrete blocks and other devices will not be acceptable. For slabs-on-grade, use supports with sand plates or horizontal runners where wetted base materials will not support chair legs. For exposed-to-view concrete surfaces, where legs of supports are in contact with forms, provide supports with legs that are hot-dip galvanized, after fabrication, or plastic protected or stainless steel protected.

E. Fiber Reinforcement – Collated polypropylene fiber, ¾”-inch, manufactured from 100% virgin homopolymer polypropylene, hydrophobic, in compliance with ASTM C116.

2.5 CONCRETE MATERIALS

A. Portland Cement

ASTM C150, Type II, unless otherwise acceptable to ENGINEER. Use only one (1) brand of cement throughout the project, unless otherwise acceptable to the ENGINEER. The use of ground granulated blast furnace slag is not allowed.

B. Aggregates

ASTM C33 and as herein specified. Provide aggregates from a single source for all exposed concrete.

Local aggregates not complying with ASTM C33 but which have shown by special test or actual service to produce concrete of adequate strength and durability may be used when acceptable to the ENGINEER.

1. Fine Aggregate - Clean, sharp, natural sand free from loam, clay, lumps or other deleterious substances. Dune sand, bank-run sand and manufactured sand are not acceptable.

2. Coarse Aggregate - Clean, uncoated, processed aggregate containing no clay, mud, loam or foreign matter, as follows:

   a. Crushed stone processed from natural rock or stone.

   b. Washed gravel, either natural or crushed. Use of pit or bank run gravel is not permitted.

   c. Maximum Aggregate Size - Not larger than one-fifth (1/5) of the narrowest dimensions between sides of forms, one-third (1/3) of the depth of slabs, nor three-fourths (3/4) of the minimum clear space between individual reinforcing bars or bundles of bars.

3. These limitations may be waived if, in the judgment of the ENGINEER, workability and methods of consolidation are such that concrete can be placed without honeycomb or voids.

4. In general it is desired that normal commercial mixes using 1-1/2-inch or 3/4-inch maximum aggregate size be used.

5. Aggregate for exposed aggregate concrete shall consist of selected aggregate of washed clean river gravel in color range of medium to dark in browns and grays; material uniformly sized 5/8-inch to 3/4-inch.

C. Water: Clean, fresh, drinkable.

D. Air Entraining Admixture: ASTM C260.

E. Water-Reducing Admixture: ASTM C494, Type A.

F. Set-Control Admixtures: ASTM C494, as follows:

1. Type B, Retarding.
2. Type C, Accelerating.
3. Type D, Water-reducing and Retarding.
4. Type E, Water-reducing and Accelerating.

Calcium chloride will not be permitted in concrete, unless otherwise authorized in writing by the ENGINEER.

2.6 RELATED MATERIALS

A. Bituminous and Fiber Joint Filler

Provide resilient and non-extruding type premolded bituminous impregnated fiberboard units complying with ASTM D1751, FS HH-F-341, Type 1 and AASHTO M 213. Provide one of the following products:

1. Elastite; Philip Carey/Celotex

2. Flexcell; Celotex Corp.

3. Crane Fiber 1390; W.R. Grace & Co.

4. Fibre; W.R. Meadows, Inc.

5. Tex-Lite; J & P Petroleum Prod. Inc.

6. Sonoflex; Sonneborn/Contech, Inc.

B. Joint Sealing Compound: See Section 07 92 00, Joint Sealants.

C. Moisture Barrier

Provide moisture barrier cover over all prepared base material. Use only materials that are resistant to decay when tested in accordance with ASTM E154. The moisture barrier consists of heavy Kraft papers laminated together with glass fiber

reinforcement and overcoated with black polyethylene on each side. Provide Moistop, St. Regis, or equal.

D. Form Ties (for forms other than wall forms)

Factory-fabricated, adjustable-length, removable or snapoff metal form ties, designed to prevent form deflection, and to prevent spalling concrete surfaces upon removal. Unless otherwise shown, provide ties so portion remaining within concrete after removal is at least 1-1/2 inches inside concrete. Unless otherwise shown, provide form ties, which will not leave holes larger than 1-inch in diameter in concrete surface.

E. Concrete Curing Materials

Acrylic curing and sealing compound - Water emulsion acrylic curing and sealing compound formulated of acrylic polymers of water based carrier. W.R. Meadows, Inc. VOCOMP-20 or approved equal.

F. Epoxy Adhesive

Provide Sikadur Hi-Mod (Sikastik 370) or Sikadur Hi-Mod Gel (Sikastix 390) for application to wire-brushed and prepared existing concrete to be mated to new concrete. Apply per manufacturer's recommendations.

G. Chemical-Hardener Finish: Provide Hornolith from Tamms Industries, or approved equal.

H. Non-shrink Grout: See Section 03 60 00, Grouting.

2.7 PROPORTIONING NORMAL CONCRETE

A. Proportion mixes by either laboratory trial batch or field experience methods, using materials to be employed on the project for each class of concrete required, complying with ACI 211.1. All measurements shall be by weight. All concrete admixtures will either be by the same supplier to insure compatibility. If different suppliers are used a memorandum from EACH admixture supplier will be provided stating the compatibility of their product with the other supplier's products.

B. The slump shall be between two inches and four inches when tested in accordance with ASTM Specifications C 143. Variations in the slump range may be allowed by the ENGINEER if admixtures, such as water reducers or superplasticizers, are utilized in the concrete mix. Regardless of the measured slump, the maximum allowable water-cement ratios as specified here-in, shall be strictly adhered to.

C. Compressive Strength, Water and Cement Content

Not withstanding what has been stated here-before, and unless shown otherwise on

the Drawings, the concrete shall meet the following requirements. All concrete except as noted otherwise on the drawings shall have 4,000 psi 28-day compressive strength. The maximum water content per 94 pound sack of cement is 4.5 gallons. The minimum cement content for the 4,000psi mix is 6.0 sacks (94 pound sack of cement per cubic yard of concrete). Up to a maximum of 15% of cementatious material may be fly ash in accordance with ASTM C618. The use ground granulated blast furnace slag is not allowed.

D. Retarding Densifiers

1. All concrete (as defined in 2.9 below) used for wall construction shall also contain DARATARD-17, as manufactured by Grace Const. Products, Cambridge, MA or MBL-82, as manufactured by Master Builders, Cleveland, OH in the amounts recommended by the additive manufacturer whenever the air temperature during the pour exceeds 85° F.

2. To be considered as equal, any alternate product offered for consideration shall contain no calcium chloride, and shall be compatible with air-entrained cements and air-entraining admixtures conforming to the applicable ASTM, AASHTO, ANSI and Federal specifications.

3. CONTRACTOR shall certify that admixtures do not contain calcium chlorides or other corrosive materials.

E. Air-Entraining Agents

1. All concrete that that is specified to be air entrained or that may be exposed to freeze/thaw action either during construction or the service life of the structure must be air entrained. Sufficient air-entraining agent shall be used to provide total air content of 5 percent, +/- 1 percent.

2. Air-entraining agents shall meet ASTM C 260, ASTM C 233 and ASTM C 457.

3. The maximum total volumetric air content of the concrete before placement shall be six (6) percent plus or minus one percent as determined by ASTM C 173 or ASTM 231.

4. Subject to these Specifications, consideration will be given to the following products: PROTEX “AES,” GRACE “DAREX AEA,” MASTER BUILDERS “MB-AE10,” or SIKA CHEMICAL “AER.”

F. Water Reducing Admixtures

1. In addition to air-entrainment, approved water reducing additives, which do not affect the ultimate performance of any steel in any way, may be added to maintain

the maximum water content below that specified herein. Water reducing additives shall conform to ASTM C 494, Type A or D.

2. The use of water reducing additives shall not permit a reduction in the minimum specified cement content or in the specified amount of air-entrainment.

3. Admixtures shall contain no calcium chloride, tri-ethanolamine or fly ash. All admixtures shall be from the same manufacturer.

4. Superplasticizers, if allowed by the ENGINEER, shall conform to ASTM C 494, Type F or G, batch plant added using second or third generation only.

5. Set control admixtures if allowed by the ENGINEER, shall conform to ASTM C 494, Type B (retarding) or Type C (accelerating).

G. Fiber reinforcement admixture shall be included in the ready-mix concrete design used for filling and channeling the wet well chambers. Fibers shall be used in strict accordance with the manufacturer's directions.

2.8 CONCRETE MIXING

Ready-Mix Concrete - Comply with the requirements of ASTM C94, and as herein specified. During hot weather, or under conditions contributing to rapid setting of concrete, a shorter mixing time than specified in ASTM C94 may be required. When the air temperature is between 85°F and 90°F, reduce the mixing and delivery time from 1-1/2 hours to 75 minutes, and when the air temperature is above 90°F, reduce the mixing and delivery time to 60 minutes.

PART 3 EXECUTION

3.1 FORMS

A. Design, erect, support, brace and maintain formwork to support vertical and lateral loads that might be applied until such loads can be supported by the concrete structure. Construct formworks so concrete members and structures are of correct size, shape, alignment, elevation and position.

B. Design formworks to be readily removable without impact shock, or damage to cast-in-place concrete surfaces and adjacent materials.

C. Construct forms complying with ACI 347, to sizes, shapes, lines and dimensions shown, and to obtain accurate alignment, location, grades, level and plumb work in finished structures. Provide for openings, offsets, sinkages, keyways, recesses, moldings, rustications, reglets, chamfers, blocking, screeds, bulkheads, anchorages and inserts

and other features required in work. Use selected materials to obtain required finishes. Solidly butt joints and provide backup at joints to prevent leakage of cement paste.

D. Fabricate forms for easy removal without hammering or prying against the concrete surfaces. Provide crush plates or wrecking plates where stripping may damage cast concrete surfaces. Provide top forms for inclined surfaces where slope is too steep to place concrete with bottom forms only. Kerf wood inserts for forming keyways, reglets, recesses, and the like, to prevent swelling and for easy removal.

E. Erect falsework and support; brace and maintain it to safely support vertical, lateral and asymmetrical loads applied until such loads can be supported by in-place concrete structures.

Provide shores and struts with positive means of adjustment capable of taking up formwork settlement during concrete placing operations, using wedges or jacks or a combination thereof. Provide trussed supports when adequate foundations for shores and struts cannot be secured.

Support form facing materials by structural members spaced sufficiently close to prevent deflection. Fit forms placed in successive units for continuous surfaces to accurate alignment, free from irregularities and within allowable tolerances.

F. Provide temporary openings where interior area of formwork is inaccessible for cleanout, for inspection before concrete placement, and for placement of concrete. Securely brace temporary openings and set tightly to forms to prevent loss of concrete mortar. Locate temporary openings of forms at inconspicuous locations.

G. Chamfer exposed corners and edges, reveals and drips as shown using wood, metal, PVC or rubber strips fabricated to produce uniform smooth lines and tight edge joints.

H. Provisions for Other Trades - Provide openings in concrete formwork to accommodate work of other trades. Determine size and location of openings, recesses and chases from trades providing such ties. Accurately place and securely support items built into forms.

I. Cleaning and Tightening - Thoroughly clean forms and adjacent surfaces to receive concrete. Remove chips, wood, sawdust, dirt or other debris just before concrete is placed. Retighten forms after concrete placement if required to eliminate mortar leaks.

3.2 PLACING REINFORCEMENT

Detail and place according to ACI Manual SP-66. Unless otherwise noted, minimum cover shall be 1-1/2 inches for No. 5 and smaller bars, two (2) inches for No. 6 and larger bars and three (3) inches when poured against earth. Unless otherwise noted, bend all horizontals reinforcing a minimum of two (2) feet at corners and wall intersections.

A. Clean reinforcement of loose rust and mill scale, earth, ice and other materials which reduce or destroy bond with concrete.

B. Accurately position, support and secure reinforcement against displacement by formwork, construction, or concrete placement operations. Locate and support reinforcing by metal chairs, runners, bolsters, spacers and hangers, as required.

C. Place reinforcement to obtain at least the minimum coverages for concrete protection. Arrange, space and securely tie bars and bar supports to hold reinforcement in position during concrete placement operations. Set wire ties so ends are directed into concrete, not toward exposed concrete surfaces. Do not place reinforcing bars more than two inches beyond the last leg of continuous bar support. Do not use supports as bases for runways for concrete conveying equipment and similar construction loads.

D. Install welded wire fabric in as long lengths as practicable. Lap adjoining pieces at least one full mesh plus two (2) inches, and lace splices with wire. Offset end laps in adjacent widths to prevent continuous laps in either direction.

3.3 JOINTS

A. Construction Joints - Locate and install construction joints, which are not shown on the drawings, so as not to impair the strength and appearance of the structure, as acceptable to the ENGINEER.

B. Place construction joints perpendicular to the main reinforcement. Continue all reinforcement across construction joints. Unless otherwise specified, reinforcement shall be lapped in accordance with ACI Standards.

3.4 INSTALLATION OF EMBEDDED ITEMS

A. General - Set and build into the work anchorage devices and other embedded items required for other work that is attached to, or supported by, cast-in-place concrete. Use setting drawings, diagrams, instructions and directions provided by suppliers of the items to be attached thereto.

B. Edge Forms and Screed Strips for Slabs - Set edge forms or bulkheads and intermediate screed strips for slabs to obtain the required elevations and contours in the finished slab surface. Provide and secure units sufficiently strong to support the types of screed strips by the use of strike-off templates or accepted compacting type screeds.

C. Cast in Place Reglets - Place in straight and continuous lines as detailed to enable flashing to be applied continuously without deviation at reglet joints more than 1/8-inch. Miter corners for continuous reglet joint where outside corners occur. At inside corners extend one section 1-inch past corner. Adequately anchor or secure reglets per manufacturer’s instructions prior to pouring and during construction to insure

dimensional tolerances and alignment. Vibrate concrete to insure concrete cover adjacent to and around reglet. Visually inspect after pour and patch as required.

3.5 PREPARATION OF FORM SURFACES

Coat the contact surfaces of forms with a form-coating compound before reinforcement is placed. Thin formcoating compounds only with thinning agent of type, and in amount, and under conditions of the form-coating compound manufacturer's directions. Use dissipating-type form oil at surfaces to receive cement plaster finish. Do not allow excess form-coating material to accumulate in the forms or to come into contact with concrete surfaces against which fresh concrete will be placed. Apply in compliance with manufacturer's instructions. Coat steel forms with a non-staining, rust-preventative form oil or otherwise protect against rusting. Rust-stained steel formwork is not acceptable.

3.6 CONCRETE PLACEMENT

A. Pre-Placement Inspection

1. Before placing concrete, inspect and complete the formwork installation, reinforcing steel, and items to be embedded or cast in. Notify other crafts involved in ample time to permit the installation of their work; cooperate with other trades in setting such work as required. Notify ENGINEER in time for inspection prior to pouring.

2. Thoroughly wet wood forms immediately before placing concrete, as required where form coatings are not used.

3. Coordinate the installation of joint materials and moisture barriers with placement of forms and reinforcing steel.

4. Concrete Curbs and Paving - Do not place concrete until subbase is completed and approved by the ENGINEER as required to provide uniform dampened condition at the time concrete is placed. Moisten subbase as required to provide uniform dampened condition at the time concrete is placed.

B. Place concrete in compliance with the practices and recommendations of ACI 304 and as herein specified.

1. Deposit concrete continuously or in layers of such thickness that no concrete will be placed on concrete which has hardened sufficiently to cause the formation of seams or planes of weakness within the section. If a section cannot be placed continuously, provide construction joints as herein specified. Perform concrete placing at such a rate that concrete, which is being integrated, with fresh concrete is still plastic. Deposit concrete as nearly as practicable to its final location to avoid segregation due to rehandling or flowing. Do not subject concrete to any procedure, which will cause segregation.

2. Screed concrete which is to receive other construction to the proper level to avoid excessive skimming or grouting.

3. Do not use concrete which becomes non-plastic and unworkable or does not meet the required quality control limits or which has been contaminated by foreign materials. Do not use retempered concrete. Remove rejected concrete from the project site and dispose of in an acceptable location. Do not use concrete whose allowable mixing time has been exceeded.

C. Concrete Conveying

1. Handle concrete from the point of delivery and transfer to the concrete conveying equipment and to the locations of final deposit as rapidly as practicable by methods, which will prevent segregation and loss of concrete mix materials.

2. Provide mechanical equipment for conveying concrete to ensure a continuous flow of concrete at the delivery end. Provide runways for wheeled concrete conveying equipment from the concrete delivery point to the locations of final deposit. Keep interior surfaces of conveying equipment, including chutes, free of hardened concrete, debris, water, snow, ice and other deleterious materials.

3. The CONTRACTOR shall provide traffic control on the narrow access roads to the work sites.

4. The CONTRACTOR shall not wash concrete trucks/chutes/equipment off at the project site unless plastic tarps and hay bales are employed to contain the concrete. The CONTRACTOR will be required to haul off-site all concrete contaminated soil.

D. Placing Concrete into Forms

1. Deposit concrete in forms in horizontal layers not deeper than 24 inches and in a manner to avoid inclined construction joints. Where placement consists of several layers, place each layer while preceding layer is still plastic to avoid cold joints.

2. Do not interrupt successive placement; do not permit cold joints to occur.

3. Remove temporary spreaders in forms when concrete placing has reached the elevation of such spreaders.

4. Consolidate concrete placed in forms by mechanical vibrating equipment supplemented by hand spading, rodding or tamping. Use equipment and procedures for consolidation of concrete in accordance with the recommended practices of ACI 309, to suit the type of concrete and project conditions. Vibration of forms and reinforcing will not be permitted.

5. Do not use vibrators to transport concrete inside of forms. Insert and withdraw vibrators vertically at uniformly spaced locations not farther than the visible effectiveness of the machine. Place vibrators to rapidly penetrate the layer of concrete at least six (6) inches into the preceding layer. Do not insert vibrators into lower layers of concrete that have begun to set. At each insertion, limit the duration of vibration to the time necessary to consolidate the concrete and complete embedment of reinforcement and other embedded items without causing segregation of the mix.

6. Do not place concrete in supporting elements until the concrete previously placed in columns and walls is no longer plastic.

E. Bonding

1. Roughen surfaces of set concrete at all joints except where bonding is obtained by use of concrete bonding agent, and clean surfaces of laitance, coatings, loose particles and foreign matter. Roughen surfaces in a manner to expose bonded aggregate uniformly and not to leave laitance, loose particles of aggregate or damaged concrete at the surface.

2. Prepare for bonding of fresh concrete to new concrete that has set but is not fully cured, as follows:

   a. At joints between footings and walls or columns, and between walls or columns and beams or slabs they support, and elsewhere unless otherwise specified herein, dampen, but do not saturate, the roughened and cleaned surface of set concrete immediately before placing fresh concrete.

   b. At joints in exposed work; at vertical joints in walls; at joints in girders, beams, supported slabs and other structural members; and at joints designed to contain liquids; dampen, but do not saturate the roughened and cleaned surface of set concrete and apply a liberal coating of neat cement grout.

   c. Use neat cement grout consisting of equal parts Portland cement and fine aggregate by weight and not more than six (6) gallons of water per sack of cement. Apply with a stiff broom or brush to a minimum thickness of 1/16-inch. Deposit fresh concrete before cement grout has attained its initial set.

   d. In lieu of neat cement grout, bonding grout may be a commercial bonding agent. Apply to cleaned concrete surfaces in accordance with the printed instructions of the bonding material manufacturer.

3. Prepare for bonding of fresh concrete to fully cured hardened concrete or existing concrete by using an epoxy-resin-bonding agent as follows:

a. Handle and store epoxy-resin adhesive binder in compliance with the manufacturer's printed instructions, including safety precautions.

b. Mix the epoxy-resin adhesive binder in the proportions recommended by the manufacturer, carefully following directions for safety of personnel.

c. Before depositing fresh concrete, thoroughly roughen and clean hardened concrete surfaces and coat with epoxy-resin grout not less than 1/16-inch thick. Place fresh concrete while the epoxy-resin material is still tacky, without removing the in-place grout coat, and as directed by the epoxy-resin manufacturer.

F. Cold Weather Placing

1. Protect all concrete work from physical damage or reduced strength which could be caused by frost, freezing actions, or low temperatures, in compliance with the requirements of ACI 306 and as herein specified.

2. When the air temperature has fallen to or is expected to fall below 40°F, provide adequate means to maintain the temperature in the area where concrete is being placed at either 70°F for three (3) days or 50°F for five (5) days after placing. Provide temporary housing or coverings including tarpaulins or plastic film. Keep protections in place and intact at least 24 hours after artificial heat is discontinued. Keep concrete moist. Avoid rapid dry-out of concrete due to over-heating and avoid thermal shock due to sudden cooling or heating.

3. When air temperature has fallen to or is expected to fall below 40°F, uniformly heat all water and aggregates before mixing as required to obtain a concrete mixture temperature of not less than 50°F, and not more than 80°F, at point of placement.

4. Do not use frozen materials containing ice or snow. Do not place concrete on frozen subgrade or on subgrade containing frozen materials. Ascertain that forms, reinforcing steel and adjacent concrete surfaces are entirely free of frost, snow and ice before placing concrete.

5. Do not use calcium chloride, salt and other materials containing antifreeze agents or chemical accelerators unless otherwise accepted in mix designs.

G. Hot Weather Placing

1. When hot weather conditions exist that would seriously impair the quality and strength of concrete, place concrete in compliance with ACI 305 and as herein specified.

2. Cool ingredients before mixing to maintain concrete temperature at time of placement below 90°F. Mixing water may be chilled, or chopped ice may be used

to control the concrete temperature provided the water equivalent of the ice is calculated to the total amount of mixing water.

3. Cover reinforcing steel with water soaked burlap if it becomes too hot so that the steel temperature will not exceed the ambient air temperature immediately before embedment in concrete.

4. Wet forms thoroughly before placing concrete.

5. Do not use retarding admixtures unless otherwise accepted in mix designs.

3.7 FINISH OF FORMED SURFACES

A. Rough Form Finish

For formed concrete surfaces not exposed to view in the finish work or covered by other construction, unless otherwise shown or specified. This is the concrete surface having the texture imparted by the form facing material used, with tie holes and defective areas repaired and patched and fins and other projections exceeding 1/4-inch in height rubbed down or chipped off.

B. Related Unformed Surfaces

At tops of walls, horizontal offsets and similar unformed surfaces occurring adjacent to formed surfaces, strike off smooth and finish with a texture matching the adjacent formed surfaces. Continue the final surface treatment of formed surfaces uniformly across the adjacent unformed surfaces, unless otherwise shown.

3.8 CONCRETE CURING AND PROTECTION

A. General

1. Protect freshly placed concrete from premature drying and excessive cold or hot temperature and maintain without drying at a relatively constant temperature for the period of time necessary for hydration of the cement and proper hardening of the concrete.

2. Start initial curing as soon as free moisture has disappeared from the concrete surface after placing and finishing. Weather permitting, keep continuously moist for not less than 72 hours.

3. Begin final curing procedures immediately following initial curing and before the concrete has dried. Continue final curing for at least seven (7) days and in

accordance with ACI 301 procedures. Avoid rapid drying at the end of the final curing period.

B. Curing Methods

Perform curing of concrete by moist curing, by moisture-retaining cover curing, by membrane curing or by combinations thereof, as herein specified. Provide the curing methods indicated as follows:

1. For concrete floor slabs provide moisture curing, moisture cover curing or liquid membrane/chemical curing-hardening curing. If liquid membrane curing is used, it must be compatible with concrete hardening compounds to be applied later.

2. For other concrete work, provide moisture curing or moisture cover curing. Do not use liquid membrane or chemical curing-hardening curing on any concrete work to receive any applied finishes.

3. For curing, use only water that is free of impurities, which could etch or discolor exposed, natural concrete surfaces.

4. Provide moisture curing by any of the following methods:

    a. Keeping the surface of the concrete continuously wet by covering with water.

    b. Continuous water-fog spray.

    c. Covering the concrete surface with the specified absorptive cover thoroughly saturated with water and keeping the absorptive cover continuously wet. Place absorptive cover so as to provide coverage of the concrete surfaces and edges with a 4-inch lap over adjacent absorptive covers.

5. Provide moisture-cover curing as follows - Cover the concrete surfaces with the specified moisture-retaining cover for curing concrete placed in the widest practicable width with sides and ends lapped at least three (3) inches and sealed by waterproof tape or adhesive. Immediately repair any holes or tears during the curing period using cover material and waterproof tape.

6. Provide liquid membrane curing as follows:

    a. Apply the specified membrane-forming curing compound to damp concrete surfaces as soon as the water film has disappeared. Apply uniformly in a coat continuous operation by power spray equipment in accordance with the manufacturer’s directions. Recoat areas, which are subjected to heavy rainfall within three (3) hours after initial application. Maintain the continuity of the coating and repair damage to the coat during the entire curing period.

b. Do not use membrane-curing compounds on surfaces, which are to be covered with a coating material applied directly to the concrete or with a covering material bonded to the concrete. Such as other concrete, liquid floor hardener, waterproofing, dampproofing, membrane roofing, flooring, painting, and other coatings and finish materials, unless otherwise acceptable to the ENGINEER.

7. Curing formed Surfaces - Cure formed concrete surfaces, including the undersides of girders, beams, supported slabs and other similar surfaces by moist curing with the forms in place for the full curing period or until forms are removed. If forms are removed, continue curing by methods specified above, as applicable.

8. Curing Unformed Surfaces

   a. Initially cure unformed surfaces, such as slabs, floor topping and other flat surfaces by moist curing, whenever possible.

   b. Final cure unformed surfaces, unless otherwise specified, by any of the methods specified above, as applicable.

   c. Final cure concrete surfaces to receive liquid floor hardener or finish flooring by use of moisture-retaining cover, unless otherwise acceptable to the ENGINEER.

9. Provide liquid curing-hardening compound as follows:

   a. Apply to horizontal surfaces when concrete is dry to touch by means of power spray, hand spray or hair broom in accordance with manufacturer's directions.

C. Temperature of Concrete during Curing

1. When the atmospheric temperature is 40°F and below, maintain the concrete temperature between 50°F and 70°F continuously throughout the curing period. When necessary, make arrangements before concrete placing for heating, covering, insulation or housing as required to maintain the specified temperature and moisture conditions continuously for the concrete curing period. Provide cold weather protections complying with the requirements of ACI 306.

2. When the atmospheric temperature is 80°F, and above, or during other climatic conditions which will cause too rapid drying of the concrete, make arrangements before the start of concrete placing for the installation wind breaks or shading, and for fog spraying, wet sprinkling or moisture-retaining covering. Protect the concrete continuously for the concrete curing period. Provide hot weather protections complying with the requirements of ACI 305.

3. Maintain concrete temperature as uniformly as possible and protect from rapid atmospheric temperature changes. Avoid temperature changes in concrete, which exceed 5°F in any one-hour and 50°F in any 24-hour period.

D. Protection from Mechanical Injury - During the curing period, protect concrete from damaging mechanical disturbances including load stresses, heavy shock, excessive vibration and from damage caused by rain or flowing water. Protect all finished concrete surfaces from damage by subsequent construction operations.

3.9 MISCELLANEOUS CONCRETE ITEMS

A. Filling-In - Fill-in holes and openings in concrete structures for the passage of work by other trades, unless otherwise shown or directed, after the work of other trades is in place. Mix, place and cure concrete as herein specified, to blend with in-place construction. Provide all other miscellaneous concrete filling shown or required to complete the work.

B. Curbs - Provide monolithic finish to interior curbs by stripping forms while concrete is still green and steel-troweling surfaces to a hard, dense finish with corners, intersections, and terminations slightly rounded.

C. Equipment Bases and Foundations - Provide machine and equipment bases and foundations as shown on the drawings. Set anchor bolts for machines and equipment to template at correct elevations, complying with certified diagrams or templates of the manufacturer furnishing the machines and equipment.

3.10 REMOVAL OF SHORES AND FORMS

A. Remove shores and reshore in a planned sequence to avoid damage to partially cured concrete. Locate and provide adequate reshoring to safely support the work without excessive stress or deflection.

Keep reshores in place a minimum of 15 days after placing upper tier, and longer if required, until the concrete has attained its required 28-day strength and heavy loads due to construction operations have been removed.

B. Formwork not supporting weight of concrete, such as sides of beams, walls, columns and similar parts of the work, may be removed after cumulative curing at not less than 50°F for 24 hours after placing concrete. Providing the concrete is sufficiently hard to not be damaged by form removal operations and provided curing and protection operations are maintained.

C. Formwork supporting weight of concrete, such as beam soffits, joints, slabs and other structural elements, may not be removed in less than 14 days and until concrete has attained design minimum compressive strength at 28 days. Determine potential

compressive strength of in place concrete by testing field-cured specimens representative of concrete location or members.

D. Form facing material may be removed four (4) days after placement only if shores and other vertical supports have been arranged to permit removal of form facing material without loosening or disturbing shores and supports.

E. Re-Use of Forms

Clean and repair surfaces of forms to be re-used in the work. Split, frayed, delaminated or otherwise damaged form facing material will not be acceptable. Apply new form coating compound material to concrete contact surfaces as specified for new formwork.

When forms are extended for successive concrete placement, thoroughly clean surfaces, remove fins and laitance, and tighten forms to close all joints. Align and secure joints to avoid offsets. Do not use "patched" forms for exposed concrete surfaces, except as acceptable to the Architect.

No forming material will be allowed to be built permanently into exposed visible surfaces.

3.11 CONCRETE SURFACE REPAIRS

A. Patching Defective Areas

1. Repair and patch defective areas with cement mortar immediately after removal of forms but only when directed by the ENGINEER.

2. Cut out honeycomb, rock pockets, voids over 1/2-inch diameter and holes left by tie rods and bolts down to solid concrete but, in no case, to a depth of less than 1-inch. Make edges of cuts perpendicular to the concrete surface. Before placing the cement mortar, thoroughly clean, dampen with water and brush-coat the area to be patched with neat cement grout. Proprietary patching compounds may be used when acceptable to the ENGINEER.

3. For exposed-to-view surfaces, blend white Portland cement and standard Portland cement so that, when dry, the patching mortar will match the color of the surrounding concrete. Provide test areas at inconspicuous location to verify mixture and color match before proceeding with the patching. Compact mortar in place and strike off slightly higher than the surrounding surface.

4. Fill holes extending through concrete by means of a plunger type gun or other suitable device from the least exposed face, using a flush stop held at the exposed face to ensure complete filling.

B. Repair of Formed Surfaces

1. Repair exposed-to-view formed concrete surfaces that contain defects, which adversely affect the appearance of the finish. Remove and replace the concrete having defective surfaces if the defects cannot be repaired to the satisfaction of the ENGINEER. Surface defects, as such, include color and texture irregularities, cracks, spalls, air bubbles, honeycomb, rock pockets, and holes left by the rods and bolt; fins and other projections on the surface; and stains and other discolorations that cannot be removed by cleaning.

2. Repair concealed formed concrete surfaces that contain defects that adversely affect the durability of the concrete. If defects cannot be repaired, remove and replace the concrete having defective surfaces. Surface defects, as such, include cracks in excess of 0.01-inch wide, cracks or any width and other surface deficiencies which penetrate to the reinforcement or completely through non-reinforced sections, honeycomb, rock pockets, holes left by tie rods and bolts, and spalls except minor breakage at corners.

C. Repair of Unformed Surfaces

1. Test unformed surfaces, such as monolithic slabs, for smoothness and to verify surface plane to the tolerances specified for each surface and finish. Correct low and high areas as herein specified.

2. Test unformed surfaces sloped to drain for trueness of slope, in addition to smoothness, using a template having the required slope. Correct high and low areas as herein specified.

3. Repair finished unformed surfaces that contain defects, which adversely affect the durability of the concrete. Surface defects, as such, include crazing, cracks in excess of 0.01-inch wide or which penetrate to the reinforcement or completely through non-reinforced sections regardless of width, spalling, popouts, honeycomb, rock pockets and other objectionable conditions.

4. Correct high areas in unformed surfaces by grinding, after the concrete has cured sufficiently so those repairs can be made without damage to adjacent areas.

5. Correct low areas in unformed surfaces during or immediately after completion of surface finishing operations by cutting out the low areas and replacing with fresh concrete. Finish repaired areas to blend into adjacent concrete. Proprietary patching compounds may be used when acceptable to the ENGINEER.

6. Repair defective areas, except random cracks and single holes not exceeding 1-inch diameter, by cutting out and replacing with fresh concrete. Remove defective areas to sound concrete with clean, square cuts, and expose reinforcing steel with at least

3/4-inch clearance all around. Dampen all concrete surfaces in contact with patching concrete and brush with a neat cement grout coating, or use concrete bonding agent. Place patching concrete before grout takes its initial set. Mix patching concrete of the same material to provide concrete of the same type or class as the original adjacent concrete. Place, compact and finish as required to blend with adjacent finished concrete. Cure in the same manner as adjacent concrete.

7. Repair isolated random cracks and single holes not over 1 inch in diameter by the dry-pack method. Groove the top of cracks and cut out holes to sound concrete and clean off dust, dirt and loose particles. Dampen all cleaned concrete surfaces and brush with a neat cement grout coating. Place dry-pack before the cement grout takes its initial set. Mix dry-pack, consisting of one part Portland cement to 2-1/2 parts fine aggregate passing a No. 16 mesh sieve, using only enough water as required for handling and placing. Compact dry-pack mixture in place and finish to match adjacent concrete. Keep patched areas continuously moist for not less than 72 hours.

8. For repair of existing unformed surfaces, mechanically remove all lose concrete as required to expose sound aggregate. Clean concrete surfaces to achieve a contaminate free, open textured surface. Square cut or under cut perimeter to minimum depth as specified by the repair mortar manufacturer. Remove all lose concrete around the exposed steel and hand tool or blast clean all portions of rebar with visible rust to near white metal finish. If half of the diameter of the reinforcing steel is exposed, chip out behind the reinforcing to a 1/2-inch minimum depth. Splice new reinforcing steel to existing where corrosion has depleted the cross-section area by 25%. Apply a corrosion inhibitor/primer/bonding agent to all exposed rebar and other steel components and to concrete surfaces to be repaired per manufacturer's requirements, such as Sika Armatec 110 . Apply a polymer-modified, cement-based, repair mortar, trowel applied as specified by the manufacturer, such as Sika MonoTop 615.

9. Repair methods not specified above may be used subject to the acceptance of the ENGINEER.

3.12 QUALITY CONTROL TESTING DURING CONSTRUCTION

A. The CONTRACTOR will engage a special inspector/testing laboratory to perform all tests and to submit test reports to the ENGINEER and the OWNER.

B. Concrete shall be sampled and tested for quality control during the placement of concrete, as follows:

1. Sampling Fresh Concrete - ASTM C172, except modified for slump to comply with ASTM C94.

2. Slump - ASTM 143; one (1) test for each concrete load at point of discharge; and one (1) for each set of compressive strength test specimens.

3. Air Content - ASTM C231, pressure method; one (1) for each set of compressive strength test specimens.

4. Compression Test Specimen - ASTM C31; one (1) set of four (4) standard cylinders for each compressive strength test, unless otherwise directed. Mold and store cylinders for laboratory cured test specimens except when field-cure test specimens are required.

5. Concrete Temperature - Test hourly when air temperature is 40°F and below, and when 80°F and above; and each time a set of compression test specimens is made.

6. Compressive Strength Tests - ASTM C39; one (1) set for each 100 cubic yards or fraction thereof, of each concrete class placed in any one (1) day or for each 5,000 square feet of surface area placed; one (1) specimen tested at seven (7) days, two (2) specimens tested at 28 days, and one (1) specimen retained in reserve for later testing if required.

    a. When the frequency of testing will provide less than five (5) strength tests for a given class of concrete, conduct testing from at least five (5) randomly selected batches or from each batch if fewer than five (5) are used.

    b. When the total quantity of a given class of concrete is less than 50 cubic yards, the strength tests may be waived by the ENGINEER if, in his judgment, adequate evidence of satisfactory strength is provided.

    c. If required by the building official, perform strength tests of cylinders cured under field conditions. Field cured cylinders shall be taken and molded at the same time and from the same samples as the laboratory cured test cylinders. When the strength of field-cured cylinders is less than 85 percent of companion laboratory-cured cylinders, evaluate current operations and provide corrective procedures for protecting and curing the in-place concrete.

C. Report test results in writing to the ENGINEER and the CONTRACTOR on the same day that tests are made. Reports of compressive strength tests shall contain the project identification name and number, date of concrete placement, name of CONTRACTOR, name of concrete supplier and truck number, name of concrete testing service, concrete type and class, location of concrete batch in the structure, design compressive strength at 28 days, concrete mix proportions and materials, compressive breaking strength and type of break for both 7-day tests and 28-day tests.

D. Additional tests - The testing service will make additional tests of in-place concrete when test results indicate the specified concrete strengths and other characteristics

have not been attained in the structure, as directed by the ENGINEER. The testing service shall conduct tests to determine adequacy of concrete by cored cylinders complying with ASTM C42, or by other methods as directed. CONTRACTOR shall pay for such tests conducted, and any other additional testing as may be required, when unacceptable concrete is verified.

END OF SECTION

SECTION 31 05 13

SOILS FOR EARTHWORK

PART 1 GENERAL

1.1 SUMMARY

A. This Section includes range of soil and subsoil materials intended to be referenced by other sections, generally for fill and grading purposes. Materials are indicated by "Type" to assist in referencing from other sections and on Drawing notes.

B. Section includes:

1. Subsoil materials.
2. Topsoil materials.

1.2 RELATED SECTIONS

A. Section 31 05 16 - Aggregates for Earthwork.

B. Section 31 10 00 – Site Clearing.

C. Section 31 23 16 – Excavation.

D. Section 31 23 17 - Trenching.

E. Section 31 23 18 – Rock Removal.

1.3 REFERENCES

A. American Association of State Highway and Transportation Officials:

1. AASHTO T180 - Standard Specification for Moisture-Density Relations of Soils Using a 4.54-kg (10-lb) Rammer and a 457-mm (18-in.) Drop.

B. ASTM International:

1. ASTM D1557 - Standard Test Methods for Laboratory Compaction Characteristics of Soil Using Modified Effort (56,000 ft-lbf/ft3 (2,700 kN-m/m3)).

2. ASTM D2487 - Standard Classification of Soils for Engineering Purposes (Unified Soil Classification System).

3. ASTM D6938 - Standard Test Method for In-Place Density and Water Content of Soil and Soil-Aggregate by Nuclear Methods (Shallow Depth).

1.4 SUBMITTALS

A. Section 01 33 00 - Submittal Procedures: Requirements for submittals.

B. Materials Source: Submit name of imported materials source.

C. Manufacturer's Certificate: Certify Products meet or exceed specified requirements.

1.5 QUALITY ASSURANCE

A. Furnish materials of each type from same source throughout the Work.

B. Soil Testing:

1. Soil sampling and testing to be completed by an independent laboratory approved by the Engineer.

2. Frequency of testing shall be determined by the Engineer.

3. All soil testing shall be paid for by the Contractor.

C. Compaction Tests:

1. Maximum density at optimum moisture content determined by ASTM D1557 (AASHTO T180).

2. In-place density in accordance with Nuclear Testing Method, ASTM D6938.

D. Soil Classification: All imported materials shall be classified in accordance with ASTM D2487.

PART 2 PRODUCTS

2.1 SUBSOIL MATERIALS

A. Subsoil Type S1, Select Native Material:

1. Select earth obtained from on-site excavations approved for use by Engineer.

2. Graded.

3. Free of peat, humus, vegetative matter, organic matter and rocks larger than 6 inches in diameter.

4. Processed as required to be placed in thickness as prescribed and at the optimum moisture content to obtain level of compaction required by these specifications.

B. Subsoil Type S2, Imported Fill Material:

1. Imported earth approved for use by Engineer.
2. Meeting the requirements of Subsoil Type S1.

2.2 TOPSOIL MATERIALS

A. Topsoil Type TS1, Select Native Topsoil Material:

1. Top 6 - 12 inches of existing soil containing organic matter.

2. Engineer decision shall be final as to determination of what material is topsoil quality.

3. Graded.

4. Free of roots, rocks larger than 1/2 inch subsoil, debris, large weeds and foreign matter.

a. Screening: Single screened.

B. Topsoil Type TS2, Imported Topsoil Material:

1. Imported borrow.

2. Friable loam.

3. Reasonably free of roots, rocks larger than 1/2 inch, subsoil, debris, large weeds, and foreign matter.

a. Screening: Single screened.

4. Acidity range (pH) of 5.5 to 7.5.

5. Containing minimum of 4 percent and maximum of 25 percent inorganic matter.

2.3 SPOILS

A. All excess material not suitable or not required for backfill and grading shall be hauled off site and disposed of at a location provided by the Contractor and approved by the Engineer.

B. Make arrangements for disposal of the material at no additional cost to the Owner.

C. Landfill permit to be obtained by the Contractor and provided to Engineer prior to commencement of disposal.

2.4 SOURCE QUALITY CONTROL

A. Testing and Analysis of Subsoil Material: Perform in accordance with ASTM D1557 (AASHTO T180).

B. When tests indicate materials do not meet specified requirements, change material or vary compaction methods and retest. Additional testing shall be completed and paid for by the Contractor with no reimbursement by the Owner.

C. Furnish materials of each type from same source throughout the Work.

PART 3 EXECUTION

3.1 EXCAVATION

A. Excavate material of every nature and description to the lines and grades as indicated on the Drawings and/or as required for construction of facilities.

B. Site within clearing limits shall be stripped of topsoil as required to obtain additional topsoil necessary to complete Work indicated in the Drawings or as specified.

C. When practical, do not excavate wet top soil.

D. Stockpile excavated material meeting requirements for subsoil materials and topsoil materials.

E. Remove excess excavated subsoil and topsoil not intended for reuse from Site.

F. Remove excavated materials not meeting requirements for subsoil materials and topsoil materials from Site.

3.2 STOCKPILING

A. Stockpile soils at locations shown in the Drawings or at locations as approved by Engineer for redistribution as specified.

1. Site may not have sufficient area to stockpile excavated material that will be required for fill later in the project. If additional stockpile area is required to complete the Project on schedule, arrange off-site stockpile areas.

2. No additional payments will be made for stockpiling excavated materials off-site.

B. Stockpile in sufficient quantities to meet Project schedule and requirements.

C. Separate differing materials with dividers or stockpile apart to prevent mixing.

D. Prevent intermixing of soil types or contamination.

E. Direct surface water away from stockpile site to prevent erosion or deterioration of materials.

1. Grade surface of stockpiles to prevent ponding of water.
2. Cover stockpiles to minimize the infiltration of water.

F. Stockpile unsuitable and/or hazardous materials on impervious material and cover to prevent erosion and leaching, until disposed of.

3.3 STOCKPILE CLEANUP

A. Remove stockpile, leave area in clean and neat condition. Grade site surface to prevent free standing surface water.

B. When borrow area is indicated, leave area in clean and neat condition. Grade site surface to prevent free standing surface water.

END OF SECTION

SECTION 31 05 16

AGGREGATES FOR EARTHWORK

PART 1 GENERAL

1.1 SUMMARY

A. This Section includes range of coarse and fine aggregate materials intended to be referenced by other Sections, generally for fill and grading purposes. Materials are indicated by "Type" to assist in referencing from other Sections and in Drawing notes.

B. Section Includes:

1. Coarse aggregate materials.
2. Fine aggregate materials.

1.2 RELATED SECTIONS

A. Section 31 05 13 - Soils for Earthwork.
B. Section 31 23 17 - Trenching.
C. Section 31 23 19 - Dewatering.
D. Section 33 11 10.30 – Steel Water Utility Transmission Piping.

1.3 REFERENCES

A. American Association of State Highway and Transportation Officials:

1. AASHTO M147 - Standard Specification for Materials for Aggregate and Soil-Aggregate Subbase, Base and Surface Courses.

2. AASHTO T27 - Sieve Analysis of Fine and Coarse Aggregates.

3. AASHTO T180 - Standard Specification for Moisture-Density Relations of Soils Using a 4.54-kg (10-lb) Rammer and a 457-mm (18-in.) Drop.

4. AASHTO TP61 - Standard Method of Test for Determining the Percentage of Fracture in Coarse Aggregate

B. ASTM International:

1. ASTM C136 - Standard Test Method for Sieve Analysis of Fine and Coarse Aggregates.

2. ASTM D1557 - Standard Test Methods for Laboratory Compaction Characteristics of Soil Using Modified Effort (56,000 ft-lbf/ft3 (2,700 kN-m/m3)).

3. ASTM D2487 - Standard Classification of Soils for Engineering Purposes (Unified Soil Classification System).

4. ASTM D4318 - Standard Test Method for Liquid Limit, Plastic Limit, and Plasticity Index of Soils.

5. ASTM D6938 - Standard Test Method for In-Place Density and Water Content of Soil and Soil-Aggregate by Nuclear Methods (Shallow Depth).

1.4 SUBMITTALS

A. Section 01 33 00 - Submittal Procedures: Requirements for submittals.

B. Materials Source: Submit name of imported materials suppliers.

C. Manufacturer's Certificate: Certify Products meet or exceed specified requirements.

D. Results of aggregate sieve analysis and standard proctor tests for all granular material.

1.5 QUALITY ASSURANCE

A. Furnish each aggregate material from single source throughout the Work.

B. Aggregate Testing:

1. Aggregate sampling and testing to be completed by an independent laboratory approved by the Engineer.

2. The frequency of testing shall be determined by the Engineer.

3. All aggregate testing shall be paid for by the Contractor.

C. Compaction Tests:

1. Maximum density at optimum moisture content determined by ASTM D1557 (AASHTO T180).

2. In-place density in accordance with Nuclear Testing Method, ASTM D6938.

D. Aggregate Classification: All imported materials shall be classified in accordance with ASTM D2487.

PART 2 PRODUCTS

2.1 COARSE AGGREGATE MATERIALS

A. Coarse Aggregate Type A1, Dense-Graded Aggregate: Crushed rock with 3/4 inch-0, 1 inch-0, 1-1/2 inch-0, 2 inch-0 and 2-1/2 inch-0 gradation as shown in the Drawings and meeting the requirements provided below.

1. Grading - Dense-graded base aggregate shall be crushed rock, including sand. Uniformly grade the aggregates from coarse to fine.

2. Sieve analysis shall be determined according to AASHTO T27.

3. The aggregates shall conform to one of the grading requirements Table 310516-A below.

Table 310516-A
Grading Requirements for Dense-Graded Aggregate
Separated Sizes
Percent Passing (by weight)

Sieve Size	2-1/2" - 0	2" - 0	1-1/2" - 0	1" - 0	3/4" - 0
3”	100				
2-1/2”	95 - 100	100			
2”	-	95 - 100	100		
1-1/2"	-	-	95 - 100	100	
1-1/4”	55 - 75	-	-	-	
1”	-	55 - 75	-	90 - 100	100
3/4"	-	-	55 - 75	-	90 - 100
1/2"	-	-	-	55 - 75	-
3/8”	-	-	-	-	55 - 75
1/4"	30 - 45	30 - 45	35 - 50	40 - 55	40 - 60
No. 4*	-	-	-	-	-
No. 10	[1]	[1]	[1]	[1]	[1]

[1] Of the fraction passing the 1/4 inch sieve, 40% to 60% shall pass the No. 10 sieve.
* Report percent passing sieve when no grading requirements are listed.

4. Fracture of Rounded Rock:

   a. Determined according to AASHTO TP61.
   b. Provide at least one fractured face based on the following percentage of particles retained on the 1/4-inch sieve for the designated size:

Minimum % of Fractured Particles
by Weight of Material

Designated Size	Retained on 1/4-Inch Sieve
1 1/2" – 0 and larger	50
Smaller than 1 1/2" – 0	70

5. Durability:

   a. Crushed rock aggregate shall meet the following durability requirements:

Test	Test Method	Requirements
Abrasion	AASHTO T 96	35.0% maximum
Degradation (Coarse Aggregate)	ODOT TM 208	30.0% maximum
Passing No. 20 Sieve, Sediment Height	ODOT TM 208	3.0” maximum

6. Sand Equivalent -- Crushed rock aggregate will be tested according to AASHTO T 176, and shall have a sand equivalent of not less than 50.

B. Coarse Aggregate Type A2, Granular Drain Backfill Material: Crushed or uncrushed rock or gravel as shown in the Drawings.

1. Material shall be clean and free-draining.
2. Sieve analysis shall be according to AASHTO T27.
3. Grading: Meeting the gradation requirements provided in Table 310516-B below.

Table 310516-B
Grading Requirements for Granular Drain Backfill Material
Separated Sizes
Percent Passing (by weight)

Sieve Size	Separated Sizes 1 1/2" – 3/4"	Separated Sizes 3/4" – 1/2"
2”	100	
1-1/2"	90 - 100	
1”	20 - 55	100
3/4"	0 - 15	85 - 100
1/2"	-	0 - 15
3/8”	0 - 5	-

2.2 SAND

A. Sand: Sand material shall consist of granular material, naturally produced or produced from crushed gravel, or dredge sand that is reasonably free of organic material, mica, clay, fly ash and other deleterious material, meeting the gradations of Table 310516-C below.

Table 310516-C
Grading Requirements for Sand
Separated Sizes
Percent Passing (by weight)

Sieve Size	Coarse Sand	Medium Sand	Fine Sand
1”	100	100	100
3/8”	95 - 100	95 - 100	-
#4	80 - 100	70 - 95	90 - 100
#30	10 - 30	10 - 45	-
#100	-	2 - 10	2 - 10
#200	0 - 8	0 - 7	0 - 4
Sand Equivalent	50 min.	50 min.	50 in.

2.3 SOURCE QUALITY CONTROL

A. Coarse Aggregate Material - Testing and Analysis: Perform in accordance with ASTM C136 and ASTM D1557 (AASHTO T180).

B. Sand - Testing and Analysis: Perform in accordance with ASTM C136 and ASTM D1557 (AASHTO T180).

C. When tests indicate materials do not meet specified requirements, change material and retest. Additional testing shall be completed and paid for by the Contractor with no reimbursement by the Owner.

PART 3 EXECUTION

3.1 STOCKPILING

A. Stockpile materials imported to site at shown in the Drawings or at locations as approved by Engineer for redistribution as specified.

B. Separate different aggregate materials with dividers or stockpile individually to prevent mixing.

C. Prevent intermixing of aggregate types or contamination.

D. Direct surface water away from stockpile site to prevent erosion or deterioration of materials.

1. Grade surface of stockpiles to prevent ponding of water.
2. Cover stockpiles to minimize the infiltration of water.

3.2 STOCKPILE CLEANUP

A. Remove stockpile, leave area in clean and neat condition. Grade site surface to prevent free standing surface water.

B. When borrow area is indicated, leave area in clean and neat condition. Grade site surface to prevent free standing surface water.

END OF SECTION

SECTION 31 10 00

SITE CLEARING

PART 1 GENERAL

1.1 SUMMARY

A. This Section includes clearing site of incidental paving and curbs, debris, grass, trees, and other plant life in preparation for site or building excavation work.

1.2 RELATED SECTIONS:

A. Section 01 56 39 - Tree and Plant Protection.

B. Section 02 41 00 - Demolition.

C. Section 31 23 18 - Rock Removal.

1.3 DEFINITIONS

A. Clearing: Removal of interfering or objectionable material lying on or protruding above ground surface.

B. Grubbing: Removal of vegetation and other organic matter including stumps, buried logs, and roots greater than 2-inch caliper to a depth of 12 inches below subgrade.

C. Interfering or Objectionable Material: Trash, rubbish, and junk; vegetation and other organic matter, whether alive, dead, or decaying; topsoil.

D. Limits of Disturbance: Work area boundary as shown on the Plans.

E. Root Wad: Tree stump and root mass including all roots greater than 1-inch diameter.

F. Stripping: Removal of topsoil remaining after applicable scalping is completed.

1.4 SUBMITTALS

A. Section 01 33 00 - Submittal Procedures: Requirements for submittals.

B. Clearing, Grubbing and Stripping Plan: Drawings clearly showing proposed limits to clearing, grubbing and stripping activities at Site.

C. Certification or disposal permit for landfill and/or waste disposal site.

D. A copy of written permission of private property owners, with copy of fill permit for said private property, as may be required for disposal of materials.

1.5 QUALITY ASSURANCE

A. Existing Conditions: Determine the extent of Work required and limitations before proceeding with Work.

B. Obtain Engineer's approval of staked clearing, grubbing, and stripping limits prior to commencing clearing, grubbing, and stripping.

C. Conform to applicable local, state and federal codes for environmental requirements and disposal of debris,

1. Burning on project site will not be permitted.
2. Use of herbicides will not be permitted.

D. Permits: The Contractor is responsible for obtaining all necessary permits required for completion of the Work described in this Section.

E. Protection of Persons and Property: Meet all federal, state and local safety requirements for the protection of laborers, other persons, and property in the vicinity of the work and requirements of the General Provisions.

PART 2 PRODUCTS

2.1 MATERIALS

A. Existing Materials: All materials, equipment, miscellaneous items and debris involved, occurring or resulting from demolition, clearing and grubbing work shall become the property of the Contractor at the place of origin, except as otherwise indicated in the Drawings or specifications.

B. Wound Paint: Emulsified asphalt formulated for use on damaged plant tissues.

PART 3 EXECUTION

3.1 GENERAL

A. Clear, grub, and strip areas needed for waste disposal, borrow, or Site improvements within limits shown in approved Clearing, Grubbing and Stripping Plan.

B. Remain within the property lines at all times.

C. Do not injure or deface vegetation or structures that are not designated for removal.

3.2 EXAMINATION

A. Verify existing plant life designated to remain is tagged or identified.

B. Identify waste and salvage areas for placing removed materials.

3.3 PREPARATION

A. Carefully coordinate the work of this Section with all other work and construction.

B. Call Local Utility Line Information service at 1-800-332-2344, not less than three working days before performing Work.

C. Request underground utilities to be located and marked within and surrounding construction areas.

1. Disconnect or arrange for disconnection of utilities (if any) affected by required work.

2. Keep all active utilities intact and in continuous operations.

D. Prepare Site only after:

1. Erosion and sediment controls are in place.

a. Limit areas exposed uncontrolled to erosion during installation of temporary erosion and sediment controls and in compliance with COP Erosion and Sediment Control Manual and ESC Permits.

2. Tree and vegetation protection is installed.

a. Protect existing site improvements, trees and shrubs to remain to preclude damage during construction.

b. Follow the provisions set forth in 01 56 39, Tree and Plant Protection for all temporary tree and plant protection measures.

3. Temporary fencing is installed along the Limits of Disturbance.

4. Notification of utility agencies; disconnect or arrange for disconnection of utilities (if any) affected by required work. Keep all active utilities intact and in continuous operation.

3.4 PROTECTION

A. Utilities: Locate, identify, and protect utilities located by utilities and indicated in the Drawings to remain from damage.

B. Survey control: Protect bench marks, survey control points, and existing structures from damage or displacement.

C. Preservation and Trimming of Trees, Shrubs and Other Vegetation:

1. Avoid injury to trees, shrubs, vines, plants, grasses and other vegetation growing outside of the areas to be cleared and grubbed and those trees and shrubs designated to be preserved.

2. Protect existing trees and shrubs against cutting, breaking or skinning of roots, skinning and bruising of bark, smothering of roots by stockpiling construction materials, excavated materials, excess foot or vehicular traffic and parking of vehicles within drip line.

3. Provide temporary guards, as necessary, to protect trees and vegetation to be left standing.

4. Temporarily cover exposed roots with wet burlap to prevent roots from drying out; cover with earth as soon as possible.

5. Provide protection for roots and limbs over 1 1/2-inch diameter cut during construction operations. Coat cut faces with emulsified asphalt.

6. Repairable damage to trees and shrubs designated to remain shall be made by a professional tree surgeon approved by the Engineer. Cost shall be borne by the Contractor.

D. Landscaped Areas:

1. When any portion of the Work crosses private property or landscaped areas, excavate topsoil separately and pile it on the opposite side of the trench from the subsoil.

2. Conduct Work in a manner that will restore original conditions as nearly as practicable.

3. Remove and replace any trees, shrubs, plants, sod or other vegetative material as needed to complete Work.

4. All shrubs or plants shall be balled by experienced workers, carefully handled and watered, and replaced in their original positions without damage. Sod shall be handled in a similar manner.

5. Wherever sod cannot be saved and restored, the ground must be reseeded and cared for until a stand of grass is reestablished.

6. Plants or shrubs killed or destroyed shall be replaced and paid for by the Contractor.

7. It is the intent of this paragraph that the Contractor shall leave the surface and plantings in substantially the same conditions as before the Work is undertaken.

E. Miscellaneous Site Features: Protect all existing miscellaneous site features from damage by excavating equipment and vehicular traffic, including but not limited to existing structures, fences, mailboxes, sidewalks, paving, and curbs.

F. Repair and Replacement:

1. Damaged items, including but not restricted to those noted above, shall be repaired or replaced with new materials as required to restore damaged items or surfaces to a condition equal to and matching that existing prior to damage or start of work of this contract.

2. Any damage to existing facilities or utilities to remain as caused by the Contractor's operations shall be repaired at the Contractor's expense.

3.5 LIMITS

A. As follows, but not to extend beyond limits of existing City of West Linn waterline easements and Right-of-Way:

1. Excavation: 5 feet beyond top of cut slopes.

2. Trench Excavation: 6 feet from trench centerline, regardless of actual trench width.

3. Fill:

a. Clearing and Grubbing: 5 feet beyond toe of permanent fill.
b. Stripping: 2 feet beyond toe of permanent fill.

4. Structures: 15 feet outside of new structures.

5. Roadways: Clearing, grubbing, scalping, and stripping 5 feet from roadway shoulders.

6. Other Areas: As shown.

B. Remove rubbish, trash, and junk from entire area within the Limits of Disturbance as material is generated. Stockpiling shall not be permitted without written approval of Owner.

3.6 CLEARING AND GRUBBING

A. Clear and grub areas within limits shown in approved Clearing, Grubbing and Stripping Plan.

B. Except in areas to be excavated, all holes resulting from the clearing and grubbing operations shall be backfilled and compacted in accordance with the applicable sections of these Specifications.

C. Clearing:

1. Remove trees, saplings, snags, stumps, shrubs, brush, vines, grasses, weeds and other vegetative growth within the clearing limits shown in the Drawings, except those trees and shrubs noted to remain in the Drawings or as directed by the Engineer.

2. Clearing shall be performed in such a manner as to remove all evidence of the presence of vegetative growth from the surface of the project site and shall be inclusive of sticks and branches of thickness or diameter greater than 3/8-inch and of grasses, weeds, exceeding 12 inches in height except as otherwise indicated.

3. Clear undergrowth and deadwood, without disturbing subsoil.

D. Grubbing: Clear areas required for access to site and execution of Work and remove all stumps, root wads, and roots over 1-inch diameter to the following depths:

1. Future Structures and Building Areas	24 Inches
2. Roads and Parking Areas	18 Inches
3. All other Areas	12 Inches

3.7 TREE REMOVAL

A. Exercise care in cutting, felling, trimming, and handling of those trees shown for removal to prevent damage to neighboring trees and structures to remain.

B. Tree Salvage: As shown on the Plans.

C. No trees may be removed unless approved and permitted by the Engineer.

D. Do not top trees unless otherwise specified or approved by Owner in writing.

E. Refer to Section 01 56 39, Tree and Plant Protection for tree protection requirements.

3.8 REMOVAL AND DISPOSAL

A. Native vegetation may be mulched and used on Site.

B. Asphalt and Gravel Surfaces:

1. Asphalt, concrete, and gravel surfaces designated for removal shall be done to full depth.

2. Asphalt, concrete, and gravel removed at Site may be reused at Site where shown in the Drawings or following approval of the Engineer.

3. Haul removed asphalt, concrete, and gravel which is unsuitable for reuse or that exceeds quantity required.

C. Remove debris, rock, abandoned piping and extracted plant life from Site.

D. Remove from the Site all debris, materials, equipment and items found thereon and materials and debris resulting from the Work, except as otherwise indicated.

1. All existing improvements designated on the Drawings or specified to be removed including but not limited to structures, pipelines, walls, footings, foundations, slabs, pavements, curbs, fencing and similar structures occurring above, at, or below existing ground surface shall be included in the Work.

2. Unless otherwise specified, any resulting voids shall be thoroughly cracked out for drainage and backfilled with suitable excavated or imported material compacted to the density of the adjacent soil.

E. Continuously clean-up and remove waste materials from site. Do not allow materials to accumulate on site.

F. Do not burn or bury materials on site. Leave site in clean condition.

G. Removal: All material resulting from demolition, clearing and grubbing, and trimming operations shall be removed from the Site and disposed of in a lawful manner. Materials placed on property of private property owners shall be by written permission only.

H. Cleanup: During and upon completion of work, promptly remove all unused tools and equipment, surplus materials and debris.

I. Adjacent areas shall be returned to their existing condition prior to the start of Work.

3.9 CLEANUP

A. During the time Work is in progress, make every effort to maintain the Site in a neat and orderly condition.

B. All refuse, broken pipe, excess fill material, cribbing and debris shall be removed as soon as practicable.

C. Should the Work not be maintained in a satisfactory condition, the Owner may cause the work to stop until the cleanup of the Work has been done to the satisfaction of the Engineer.

D. The Work will not be considered complete or the final payment certificate issued until all rubbish, unused material, or equipment shall have been removed and the premises left in a condition satisfactory to the Owner and the Engineer.

END OF SECTION

SECTION 31 23 16

EXCAVATION

PART 1 GENERAL

1.1 SUMMARY

A. This Section includes excavation required for building foundations, site structures, or under slabs-on-grade or paving. Excavating for utilities outside building is included in Section 31 23 17, Trenching.

B. Section Includes:

1. Excavating for building foundations.
2. Excavating for paving, roads, and parking areas.
3. Excavating for slabs-on-grade.
4. Excavating for site structures.
5. Excavating for landscaping.

1.2 RELATED SECTIONS

1. Section 01 45 00 - Quality Control.
2. Section 02 41 00 - Demolition.
3. Section 31 05 13 - Soils for Earthwork.
4. Section 31 05 16 - Aggregates for Earthwork.
5. Section 31 10 00 - Site Clearing.
6. Section 31 23 17 - Trenching.
7. Section 31 23 18 - Rock Removal.
8. Section 31 23 19 - Dewatering.
9. Section 31 50 00 - Excavation Support and Protection.
10. Section 33 92 10.30 – Steel Water Utility Transmission Piping

1.3 DEFINITIONS

A. Common Excavation: All excavation required for Work, regardless of the type, character, composition or condition of the material encountered. Common Excavation shall further include all debris, junk, broken concrete, and all other material. All excavation shall be classified as Common Excavation, unless provided as Rock for under Section 31 23 18, Rock Removal below.

B. Common Material: All soils, aggregate, debris, junk, broken concrete, and miscellaneous material encountered in Common Excavation, excluding rock as defined below.

C. Concrete Excavation: The removal of pieces of concrete larger than 1 cubic yard in volume that requires drilling, splitting and breaking methods, or a necessitating a trench width increase of 18 inches or more than the width of the preceding 10 feet of trench. Concrete excavation includes materials composed of Portland cement that are not identified other than manholes, structures, sewer pipe, or other appurtenances.

D. Exploratory Excavation: The removal and replacement of material from locations shown on the Drawings, or as directed for the purpose of investigating underground conditions and identifying potential utility conflict between existing and proposed utilities.

E. Overbreak: Material beyond and outside of the slope limits established by the Owner's Representative, which becomes displaced or loosened during excavation and is excavated.

F. Pothole Excavation: Pothole excavation is the removal and replacement of all materials via coring, vacuum extraction, or similar method, not classified as exploratory excavation, for the purposes of locating an underground utility and to investigate underground conditions.

G. Rock Removal: As defined in Section 31 23 18, Rock Removal.

H. Spoils: Excavated materials from Site unsuitable for use as fill or not required for backfill and grading.

I. Unsuitable Materials: See Spoils.

1.4 REFERENCES

A. Local utility standards when working within 24 inches of utility lines.

1.5 SUBMITTALS

A. Section 01 33 00 - Submittal Procedures: Requirements for submittals.

B. Excavation support plan and utility protection plan as specified in Section 31 50 10, Excavation Support Systems.

1.6 QUALITY ASSURANCE

A. Allowable Tolerances: Final grades shall be plus or minus 0.1-foot.

B. Provide adequate survey control to avoid unauthorized overexcavation.

C. Weather Limitations:

1. Material excavated when frozen or when air temperature is less than 32 degrees F shall not be used as fill or backfill until material completely thaws.

2. Material excavated during inclement weather shall not be used as fill or backfill until after material drains and dries sufficiently for proper compaction.

PART 2 PRODUCTS - Not Used

PART 3 EXECUTION

3.1 PREPARATION

A. Prior to commencing work in this Section, become familiar with site conditions. In the event discrepancies are found, notify the Engineer as to the nature and extent of the differing conditions.

B. Call Local Utility Line Information service at 1-800-332-2344 not less than three working days before performing Work.

1. Request underground utilities to be located and marked within and surrounding construction areas.

2. Coordinate with and notify utility companies should it be necessary to remove or relocate facilities.

C. Identify required lines, levels, contours, and datum.

D. See Section 31 10 00, Site Clearing for additional requirements in protection of existing utilities, survey control, plant life and landscaped areas in coordination with Work in this Section.

3.2 SITE CONDITIONS

A. Quantity Survey: The Contractor shall be responsible for calculations for quantities and volume of cut and fill from existing site grades to finish grades established under this contract as indicated in the Drawings or specified and shall include the cost for all earthwork in the total basic bid.

B. Dust Control: Must meet all federal, state and local requirements. Protect persons and property from damage and discomfort caused by dust. Water surfaces as necessary and when directed by Engineer to quell dust.

C. Soil Control: Soil shall not be permitted to accumulate on surrounding streets or sidewalks nor to be washed into sewers.

3.3 EXISTING UNDERGROUND UTILITIES

A. Protect active utilities encountered, located or otherwise, and notify persons or agencies owning same.

B. Remove inactive or abandoned utilities from within the project grading limits in accordance with Section 33 11 50, Existing Pipe Abandonment.

C. For sewer and other miscellaneous drainage facilities, fill and plug pipes as follows:

1. General:

   a. Remove all structures to a minimum of 3 feet below subgrade, unless otherwise noted.

   b. Cover top surface of all abandoned structures with two sheets of nonwoven geotextile, extended at least 1 foot beyond the outside walls of the abandoned manhole, sump, or basin.

   c. Plug all abandoned pipes with permanent plugs as specified in Section 33 11 50, Existing Pipe Abandonment.

2. Sumps:

   a. Remove existing sediment, soil, and water. Properly dispose of these materials in accordance with the requirements of these specifications.

   b. Remove top cone and first solid concrete section to a depth of approximately 8 to 10 feet below ground.

   c. Fill sump with CLSM.

   d. Backfill remaining voids for facilities within existing or proposed roadways with approved materials meeting the requirements of Section 32 11 23, Aggregate Base Courses.

3. Salvaging Manhole Frames, Covers, and Grates:

   a. Remove manhole frames, covers, and grates scheduled for salvage and store in approved location.

   b. Frames, grates, and covers meeting Specifications may be salvaged from structures to be adjusted and may be reused in the Work if of suitable size and condition.

c. Replace, at no additional cost to the Owner, all items damaged or lost by the Contractor with similar items that are comparable in all respects with those they are to replace, and which are adequate for the intended purpose.

d. Clean salvaged components to be reused of foreign material by methods that will not harm the components.

4. Existing Manhole Frames and Covers: Manhole frames and covers removed by the Contractor are the property of the Owner. Notify the Engineer a minimum of 48 hours before removal to arrange for pickup of the removed frames and covers, if not reused.

3.4 PRESERVATION OF EXISTING IMPROVEMENTS

A. Protect adjacent existing structures which may be damaged by excavation work.

1. Conduct operations in such a manner that existing street facilities, utilities, railroad tracks, structures, and other improvements, which are to remain in place, will not be damaged. Furnish and install cribbing and shoring or whatever means necessary to support material around existing facilities, or to support the facilities themselves, and maintain such supports until no longer needed.

2. Open slopes shall not be cut within 5 feet of any existing spread footings unless approved by the Engineer.

3. Do not interfere with 45 degree bearing splay of foundations unless approved by the Engineer

4. Excavated material shall not be placed adjacent to existing or proposed structures.

3.5 EXCAVATION

A. General:

1. Method of excavation shall be the Contractor's option, but care shall be exercised as final grade is approached to leave it in undisturbed condition.

2. If the final grade for supporting structures is disturbed, it shall be restored to requirements of these Specifications and satisfaction of the Engineer at no additional cost to Owner.

3. The Contractor is advised that footings should be poured as soon as possible to minimize unfavorable final grade conditions from developing.

4. Provide all measures to ensure public safety.

B. Control of Water:

1. Provide and maintain equipment to remove and dispose of water during the course of the work of this Section and keep excavations dry and free of frost or ice.

2. Bearing surfaces that become softened by water or frost must be re-excavated to solid bearing at Contractor's expense and backfilled with compacted crushed rock at Contractor's expense.

3. Grade top perimeter of excavation to prevent surface water from draining into excavation.

4. See additional requirements in Section 31 23 19, Dewatering.

C. Frozen Ground: Frost protection shall be provided for all structural excavation work. Foundation work shall not be placed on frozen ground.

D. Excavate material of every nature and description to the lines and grades as indicated in the Drawings and/or as required for construction of the facility.

1. Allow for forms, shoring, working space, granular base, topsoil and similar items, wherever applicable.

2. Trim excavations to neat lines. Remove loose matter and lumped subsoil.

E. Excavated Materials: Soils excavated at Site will be treated and used as one of two general categories of material as provided below.

1. Fill:

a. Subsoil Type S1, Select Native Fill, as approved for use by Engineer.

2. Spoils:

a. Ensure there is sufficient suitable material available to complete embankments and other required fillings prior to disposing of any excavated materials.

b. Make arrangements for disposal of spoils and include as part of contract work in preparing of project bids.

c. Landfill permit or written permission from private property owner to be obtained by the Contractor and provided to the Engineer.

F. Shoring:

1. As specified in Section 31 50 00, Excavation Support Systems.

G. Slope existing banks with machine to angle of repose or less until shored.

1. Shape, trim, and finish cut slopes to conform to lines, grades, and cross-sections shown, with proper allowance for topsoil or slope protection, where shown.

2. Protection of excavation side slopes:

   a. Use excavation methods that will not shatter or loosen excavation slopes.

   b. Where practical, excavate materials without previous loosening and in limited layers or thickness to avoid breaking the material back of the established slope line.

   c. Avoid overbreaks. Overbreak is incidental to the Work, except in cases where the Owner's Representative determines that such overbreak was unavoidable.

   d. Excavation in rock or rocky cuts:

      1) Once completed, thoroughly test the slopes with bars or other approved means to remove all loose, detached, broken, or otherwise unstable material.

      2) Remove jutting points. Scale slopes using mine scaling rods or other approved methods to remove loose or overhanging materials and provide a safe, trim, neat, and stable condition.

      3) Dispose of the materials removed under this subparagraph in the same manner as other excavated material.

   e. Remove all exposed roots, debris, and all stones more than 3 inches in size which are loose or could become loosened.

3. Construct slopes free of all exposed roots.

4. Construct slopes free of unstable rock and loose stones exceeding 3 inches in diameter.

5. Round tops of cut slopes in soil to not less than a 6 foot radius, provided such rounding does not extend off-site, outside of easements, outside of rights-of-way, or adversely impacts existing facilities, adjacent property, or completed Work.

6. Trim all surfaces neatly and smoothly.

H. Compact disturbed load bearing soil in direct contact with foundations to original bearing capacity; perform compaction in accordance with Section 31 23 17, Trenching and Section 31 23 23, Fill.

I. Notify Engineer of unexpected subsurface conditions.

J. Overexcavation for Unsuitable Foundation Conditions:

1. Cross-sectional dimensions and depths of excavations shown in the Drawings shall be subject to such changes as may be found necessary by the Engineer to secure foundations free from soft, weathered, shattered and loose material or other objectionable materials.

2. Unsuitable materials encountered shall be removed and replaced with Coarse Aggregate Type A1, 2-1/2 inch – 0 gradation, as specified in Table 310516-A of Section 31 05 16, Aggregates for Earthwork. All material placed shall be compacted to 95 percent of maximum dry density.

3. Unsuitable materials shall be removed and replaced only as directed in writing by Engineer.

K. Rock Removal:

1. Remove boulders and rock up to 1/2 cubic yard measured by volume per the requirements of this Section.

2. Remove larger boulders and rock material as specified in Section 31 23 18, Rock Removal.

3. Concrete removal, as defined herein, shall be treated as Rock Removal.

L. Stockpile excavated material in area(s) designated on or off site in accordance with Section 31 05 13, Soils for Earthwork.

3.6 FIELD QUALITY CONTROL

A. Perform excavation and controlled fill operations in accordance with the requirements of this Section.

B. Coordinate the visual inspection and approval of all bearing surfaces by Engineer before installing subsequent work.

3.7 PROTECTION

A. Prevent displacement or loose soil from falling into excavation; maintain soil stability and store excavated materials at a distance from top of excavation.

B. Protect structures, utilities and other facilities from damage caused by settlement, lateral movement, undermining, washout, and other hazards created by earth operations.

END OF SECTION

SECTION 31 23 17

TRENCHING

PART 1 GENERAL

1.1 SUMMARY

A. This Section includes the requirements for excavation and backfill of all utilities, including installation of pipe bedding, pipe zone backfill, and trench backfill and related Work as shown on the Drawings and as specified.

B. Section includes:

1. Excavating trenches for pipe, utility vaults and other utilities.
2. Compacted fill from top of utility bedding to final grades.
3. Trench and utility vault backfilling and compaction.

C. Related Sections

1. Section 01 45 00 - Quality Control.
2. Section 03 11 00 - Concrete Work.
3. Section 31 05 13 - Soils for Earthwork.
4. Section 31 05 16 - Aggregates for Earthwork.
5. Section 31 10 00 - Site Clearing.
6. Section 31 23 16 - Excavation.
7. Section 31 23 18 - Rock Removal.
8. Section 31 23 24 - Flowable Fill.
9. Section 33 92 10.30 – Steel Water Utility Transmission Piping.

1.2 REFERENCES

A. American Association of State Highway and Transportation Officials:

1. AASHTO T180 - Standard Specification for Moisture-Density Relations of Soils Using a 4.54-kg (10-lb) Rammer and a 457-mm (18-in.) Drop.

B. ASTM International:

1. ASTM C403 - Standard Test Method for Time of Setting of Concrete Mixtures by Penetration Resistance.

2. ASTM D1557 - Standard Test Methods for Laboratory Compaction Characteristics of Soil Using Modified Effort (56,000 ft-lbf/ft3 (2,700 kN-m/m3)).

3. ASTM D2922 - Standard Test Method for Density of Soil and Soil-Aggregate in Place by Nuclear Methods (Shallow Depth).

4. ASTM D3017 - Standard Test Method for Water Content of Soil and Rock in Place by Nuclear Methods (Shallow Depth).

5. D4832, Standard Test Method for Preparation and Testing of Controlled Low Strength Material (CLSM) Test Cylinders.

1.3 DEFINITIONS

A. Controlled Low Strength Material (CLSM): Also referred to as Flowable Fill. Lean cement concrete fill. A self-compacting, cementitious material.

B. Flexible Pipe: For the purposes of these Specifications, tubing between ½-inch and 4-inch diameter constructed of polyvinyl chloride (PVC) and high density polyethylene (HDPE) are considered flexible pipes. HDPE piping 4 inches in diameter and larger is also considered flexible pipe.

C. Geosynthetics: Geotextiles, geogrids, geomembranes, and drainage composite materials.

D. Imported Material: Materials obtained from sources offsite, suitable for specified use.

E. Lift: Loose (uncompacted) layer of material.

F. Obstructions: Items which may be encountered during utility and vault trenching which do not require replacement.

G. Optimum Moisture Content:

1. Determined in accordance with ASTM Standard specified to determine maximum dry density for relative compaction.

2. Determine field moisture content on basis of fraction passing 3/4-inch sieve.

H. Pipe Bedding: Trench backfill zone for full trench width which extends from the bottom outside surface of the pipe to a minimum of 6 inches below the bottom outside surface of pipe, conduit, cable or duct bank to the trench foundation so as to uniformly support the barrel of the pipe.

I. Pipe Zone: Trench backfill zone for full trench width which extends from the bottom outside surface of the pipe to a minimum of 12 inches above the top outside surface of pipe, conduit, cable or duct bank.

J. Pipe Bedding, Pipe Zone and Trench Backfill Classifications:

1. Class A: Backfill with suitable native or imported material that is approved to meet the characteristics required for the specific surface loading or other criteria of the backfill zone.

2. Class B: Backfill with imported granular material consisting of gravel or crushed rock meeting the requirements of this Section and Coarse Aggregate Type A1 as specified in Section 31 05 16, Aggregates for Earthwork; typical designated size shall be 1”-0 or ¾”-0.

3. Class C: Backfill with Fine Sand, as specified in Section 31 05 16, Aggregates for Earthwork.

4. Class D: Backfill with approved pit run or bar run material, well-graded from coarse to fine; maximum dimension shall be 3 inches.

5. Class E: Backfill with CLSM. See Section 31 23 24, Flowable Fill.

K. Pothole Excavations: Removal and replacement of all materials via coring, vacuum extraction, or similar method for the purposes of locating an underground utility and to investigate underground conditions.

L. Prepared Trench Bottom: The bottom of the trench on which the pipe bedding is to lie and which provides support for the pipe.

M. Relative Compaction: Ratio, in percent, of as-compacted field dry density to laboratory maximum dry density as determined in accordance with ASTM Standards.

N. Rigid Pipe: For the purposes of these Specifications, pipe constructed of PVC, ductile iron, steel, concrete and clay pipes are considered rigid pipes.

O. Sewer, Pipes, and Mains: Conduits of circular or other geometric shapes, used to convey liquids or gases, or other material.

P. Trench Backfill: Trench backfill zone for full trench width extending from the top of the pipe zone to pavement base rock, ground surface or other surface material.

Q. Trench Stabilization: Removal of unsuitable material in the bottom of a trench and replacement with specified material for support of a pipe, main, conduit, structure, or appurtenances.

R. Utility: Any buried pipe, duct, conduit, or cable.

S. Well-Graded: A mixture of particle sizes with no specific concentration or lack thereof of one or more sizes that, when compacted, produces a strong and relatively incompressible soil mass free from detrimental voids.

1.4 SUBMITTALS

A. Section 01 33 00, Submittal Procedures: Requirements for submittals.

B. Excavation support plan and utility protection plan as specified in Section 31 50 10, Excavation Support Systems

C. Product Data:

1. Geotextile fabric, indicating fabric and construction.

D. Imported Materials:

1. Materials Source: Submit name and location of imported fill materials suppliers.

2. Manufacturer's Certificate: Certify Products meet or exceed specified requirements.

3. Submit results of aggregate sieve analysis and standard proctor test for granular material.

E. CLSM: Mix designs in accordance with Submittal requirements of Section 31 23 24, Flowable Fill.

F. Concrete: Mix designs in accordance with Submittal requirements of Section 03 30 00, Cast-in-Place Concrete.

1.5 QUALITY ASSURANCE

A. Subsoil and topsoil fill materials: In accordance with Quality Assurance requirements stated in Section 31 05 13, Soils for Earthwork.

B. Aggregate fill materials: In accordance with Quality Assurance requirements stated in Section 31 05 16, Aggregates for Earthwork.

C. CLSM:

1. In-place testing: In accordance with ASTM C403.
2. Compressive testing: In accordance with ASTM D4832.

D. Allowable Tolerances: Final grades shall be plus or minus 0.1-foot.

1.6 COORDINATION

A. Verify Work associated with lower elevation utilities is complete before placing higher elevation utilities.

B. Coordinate trenching and utility installation work with other work at utility construction location occuring near or adjacent to specified herein.

PART 2 PRODUCTS

2.1 FILL MATERIALS

A. Subsoil Fill: Type S1, Select Native Material as specified in Section 31 05 13, Soils for Earthwork.

B. Imported Granular Fill: Coarse Aggregate Type A1, Dense-Graded Aggregate with gradation as shown in the Drawings and specified in Section 31 05 16, Aggregates for Earthwork.

C. Concrete:

1. Lean concrete as specified in Section 31 23 24, Flowable Fill, with compressive strength of 100 psi.

2. Structural concrete as specified in Section 03 30 00, Cast-in-Place Concrete with compressive strength of 3,000 psi.

D. Drain Rock: Coarse Aggregate Type A2, Granular Drain Backfill Material with gradation as shown in the Drawings and specified in Section 31 05 16, Aggregates for Earthwork.

E. Sand: As specified in Section 31 05 16, Aggregates for Earthwork.

F. Trench Stabilization Material: Coarse Aggregate Type A1, Dense-Graded Aggregate, 2-1/2” - 0 gradation as specified in Section 31 05 16, Aggregates for Earthwork.

PART 3 EXECUTION

3.1 PREPARATION

A. Call Local Utility Line Information service at 1-800-332-2344 not less than three working days before performing Work.

1. Request underground utilities to be located and marked within and surrounding construction areas.

2. Coordinate with and notify utility companies should it be necessary to remove or relocate facilities.

3. Maintain and protect above and below grade utilities indicated to remain.

B. Identify required lines, levels, contours, and datum locations.

C. Drawings and/or specifications cover and govern replacement and restoration of foreseeable damage.

D. The site of an open cut excavation shall be first cleared of all obstructions preparatory to excavation in accordance with Section 31 10 00, Site Clearing.

E. See Section 31 10 00, Site Clearing for additional requirements in protection of existing utilities, survey control, plant life and landscaped areas in coordination with Work in this Section.

1. Intent of Drawings and Specifications is that all streets, structures, and utilities be left in condition equal to or better than original condition.

2. Where damage occurs, and cannot be repaired or replaced, the Contractor shall purchase and install new material, which is satisfactory to Owner.

F. Potholing / Exploratory Test Pits: Dig such exploratory test pits and perform potholing as may be necessary in advance of trenching to determine the exact location and elevation of subsurface structures, pipelines, duct banks, conduits, and other obstructions which are likely to be encountered or need to be connected to and shall make acceptable provision for their protection, support, and maintenance of their continued operation.

G. Paved or Surfaced Streets:

1. Wherever paved or surfaced streets are cut, saw wheel or approved cutting devices shall be used.

2. Width of pavement cut shall be as shown in the Drawings.

3. Any cut or broken pavement shall be removed from site during excavation.

H. Traffic:

1. Maintain street traffic at all times as required by the Drawings and as specified herein.

2. Erect and maintain barricades, warning signs, traffic cones, and other safety devices during construction in accordance with the latest edition of Manual of Uniform Traffic Control Devices (MUTCD), Part 6, to protect the traveling public in any area applicable.

3. Provide flaggers as required during active work in roadway areas.

I. Operations shall be confined to rights-of-way and easements provided. Avoid encroachment on, or damage to, private property or existing utilities unless prior arrangements have been made with copy of said arrangement submitted to Engineer.

3.2 EASEMENTS

A. Where portions of the Work are located on private property, easements and permits will be obtained by the Owner. Easements shall provide for the use of property for construction purposes to the extent indicated on the easements.

B. Copies of these easements and permits will be available from the Owner for inspection by the Contractor. It shall be the Contractor's responsibility to determine the adequacy of the easement obtained in every case.

C. Confine construction operations to within the easement limits or street right-of-way limits, or make special arrangements with the property owners for the additional area required and notify the Engineer with a copy of the written approval from property owners of any such conditions.

D. Any damage to private property, either inside or outside the limits of right-of-way or easements provided by the Owner, resulting from Work shall be the responsibility of the Contractor. Before the Engineer will authorize final payment, the Contractor will be required to furnish the Owner with written releases from property owners where the Contractor has obtained special agreements or easements or where the Contractor's operations, for any reason, have not been kept within the construction right-of-way obtained by the Owner.

3.3 PROTECTION

A. Existing Facilities:

1. It is the intent of these specifications that all streets, structure, and utilities be left in a condition equal to or better than original condition at the completion of the Project.

2. Where damage occurs, and cannot be repaired or replaced, the Contractor shall purchase and install new material to the satisfaction to the Engineer.

3. Drawings and/or specifications cover and govern replacement and restoration of foreseeable damage.

B. Removal of Water:

1. As specified in Section 31 23 19, Dewatering.

2. At all times during construction provide and maintain ample means and devices with which to remove promptly and dispose of properly all water entering the excavations or other parts of the Work.

3. Keep all excavations dry until the utilities or vaults to be placed therein are completed. In water bearing sand, well points and/or sheeting shall be supplied, together with pumps and other appurtenances of ample capacity to keep the excavation dry as specified.

4. Dispose of water from the Work in a suitable legal manner without damage to adjacent property or structures.

C. Trench Protection:

1. Provide the materials, labor and equipment necessary to protect trenches at all times.

2. Trench protection shall provide safe working conditions in the trench and protect the Work, existing property, utilities, pavement, etc.

3. The method of protection shall be according to the Contractor's design.

4. The Contractor may elect to use a combination of shoring, overbreak, tunneling, boring, sliding trench shields, or other methods of accomplishing the work provided the method meets the approval of all applicable local, state and federal safety codes.

5. Damages resulting from improper shoring, improper removal of shoring or from failure to shore shall be the sole responsibility of the Contractor.

3.4 LINES AND GRADES

A. Trench excavation for piping, utility vaults and other utilities shall be performed to the alignment and grade as indicated in the Drawings.

B. Where grades are not shown in the Drawings, utilities shall be laid to grade between control elevations shown.

C. Water transmission mains shall be installed with a minimum cover of 48 inches.

D. The Engineer reserves right to make changes in lines, grades and depths of utilities when changes are required for Project conditions.

E. Changes in the grade and horizontal alignment of the pipeline as shown in the Drawings or as provided elsewhere in the Specifications may be necessary due to unanticipated interferences or other reasons.

1. No additional compensation will be allowed the Contractor for changes in horizontal alignment.

2. No additional compensation will be allowed for changes in grade which require additional depth of trench excavation and backfill up to 2 feet from those shown in the Drawings.

F. Use laser-beam instrument with qualified operator to establish lines and grades.

3.5 OBSTRUCTIONS

A. Obstructions to the construction of the trench, such as tree roots, stumps, abandoned pilings, abandoned buildings and concrete structures, logs, rubbish, and debris of all types shall be removed without additional compensation from the Owner.

B. The Engineer may, if requested by the Contractor or Owner, make changes in the trench alignment to avoid major obstructions if such alignment changes can be made within the perpetual easement and right-of-way and without adversely affecting the intended function of the facility or increasing costs to the Owner.

3.6 INTERFERING ROADWAYS AND STRUCTURES

A. Remove, replace and/or repair any damage done during trenching activities to fences, buildings, cultivated fields, drainage crossings, and any other properties without additional compensation from the Owner.

1. Replace or repair these structures to a condition as good as or better than their pre-construction condition prior to commencing work in the area.

B. Paved Roadways:

1. Where paved roadways are cut as part of trenching activities, Class D trench backfill will be required to the bottom of pavement base.

2. New pavement shall be equal to or better than the existing paved surface.

3. New surface shall not deviate by more than 1/4-inch from the existing finish elevation.

C. Existing Structures:

1. If existing structures are encountered as part of trenching activities which will prevent construction and are not adequately shown in the Drawings, the Contractor shall notify the Engineer before continuing with the Work.

2. The Engineer may make such field revisions to the utility alignment as necessary to avoid conflict with the existing conditions.

3. The cost of waiting or “down time” during such field revisions shall be borne by the Contractor without additional cost to the Owner or liability to the Engineer.

4. If the Contactor fails to so notify the Engineer when a conflict of this nature is encountered, but proceeds with construction despite this interference, the Contractor shall do so at the Contractor’s own risk with no additional payment.

3.7 TRENCHING

A. Excavate subsoil as required for construction of utilities to elevations shown in the Drawings.

B. Remove boulders and rock up to 1/2 cubic yard measured by volume per the requirements of this Section. Remove larger boulders and rock material as specified in Section 31 23 18, Rock Removal.

C. Open Trench Limit:

1. Do not advance open trench beyond the distance which will be backfilled and compacted the same day.

2. A maximum length of open trench shall not exceed 100 feet at any one time.

3. Temporary resurfacing shall be completed within 300 feet of the associated open trench limit for each main pipe laying operation.

4. Cover or backfill excavations at the end of each day.

5. If the trench is not backfilled at the end of each working day:

a. Provide means to prevent caving of excavation sides, as necessary, during non-working hours.

b. Cover the excavation with a system as needed to provide public safety and prevention of entry during non-working hours.

c. Provide signed and stamped submittal of caving prevention system and cover system.

6. New trenching shall not be started when earlier trenches need backfilling or the surfaces of streets or other areas need to be restored to a safe and proper condition.

D. Utility Crossings: Avoid horizontal and vertical conflicts with existing utilities.

1. Perform excavation within 24 inches of existing utility service in accordance with utility's requirements.

2. Vertical clearance between the new pipe and existing utilities shall be 12 inches minimum, unless otherwise noted on the Drawings.

3. Where existing utility lines are damaged or broken during trenching activities, the utility shall be repaired or replaced. For water or sewer bearing lines, care being taken to insure a smooth flow line and absolutely no leakage at the new joints.

4. All expenses involved in the repair or replacement of leaking or broken utility lines that have occurred due to the Contractor's operations shall be borne by the Contractor, and the amount thereof shall be absorbed in the unit prices of its bid.

E. Water Lines Crossing Sewer Lines: Whenever water lines cross sewer lines, the Contractor shall comply with local Health Department requirements.

1. Wherever possible, the bottom of the water line shall be 18 inches or more above the top of sewer pipe. One full length of the water line pipe shall be centered at the crossing.

2. For clearances less than 1.5 feet, the Contractor shall replace the existing sewer pipe with ductile iron or PVC of equal size, centered at the utility crossing, or shall encase existing sewer pipe with concrete for a minimum of 10 feet on both sides of crossing, as directed by the Engineer, at no additional cost to the Owner.

F. Excavate trenches to width and depth as indicated on Drawings. No additional payment will be provided for trenching activities beyond dimensions shown in the Drawings.

1. Excavation for trenches in which pipelines are to be installed shall provide adequate space for workers to place and joint the pipe properly and safely, but in every case the trench shall be kept to a minimum width.

2. The width of the pipe trench at and below the top of the pipe shall be such that the clear space between the barrel of the pipe and the trench shall not exceed 12 inches on either side of the pipe, or as required to complete joint welds.

3. Excavation for utility vaults and other structures shall be wide enough to provide 18 inches between the structure surface and the sides of the excavation.

4. For pipe or utility vaults to have bedding material, excavate to a depth of 6 inches below the bottom of the pipe or utility vault. Care shall be taken not to excavate below depths required.

5. If over digging occurs, the trench bottom shall be filled to grade with compacted bedding material.

G. Remove water or materials that interfere with Work.

1. The trench at all times shall be kept free from water to facilitate fine grading, the proper laying and joining of pipe, and prevention of damage to completed joints.

2. Adequate pumping equipment shall be provided to handle and dispose of the water without damage to adjacent property.

3. Water in the trench shall not be allowed to flow through the pipe while construction work is in progress unless special permission to do so has been given by the Engineer.

4. An adequate screen shall be provided to prevent the entrance of objectionable material into the pipe.

5. Remove and dispose of existing abandoned sewer pipe, structures, and other facilities as necessary to construct the improvements.

   a. Where the excavation activities require the removal of portions of an abandoned pipeline, masonry plugs shall be installed in the open ends of the pipe, unless otherwise noted in the Drawings or by the Engineer.

   b. Coordinate with Engineer prior to plugging.

   c. For plugs less than 36 inches in diameter, 8-inch deep masonry units shall be used. For plugs in larger pipelines, 12-inch deep masonry units shall be used.

6. The costs associated with the removal of water and materials noted above will be considered incidental to trench excavation and backfill.

H. Do not interfere with 45 degree bearing splay of foundations.

I. Overexcavation for Unsuitable Trench Foundation Conditions:

1. Cross-sectional dimensions and depths of excavations shown in the Drawings shall be subject to such changes as may be found necessary by the Engineer to secure foundations free from soft, weathered, shattered and loose material or other objectionable materials.

2. Unsuitable materials shall be removed and replaced only as directed in writing by Engineer.

3. Unsuitable materials encountered shall be removed and replaced with Coarse Aggregate Type A1, 2-1/2 inch – 0 gradation, as specified in Table 310516-A of Section 31 05 16, Aggregates for Earthwork. All material placed shall be compacted to 95 percent of maximum dry density.

4. Install nonwoven geotextile under trench stabilization material, over the soft or yielding excavated surface.

   a. Install the nonwoven geotextile ahead of placement of the trench stabilization material, continuously along the excavation bottom and centered on the pipe centerline.

   b. Use nonwoven geotextile width equal to the pipe diameter plus 2 feet.

   c. Place laps or splices in the geotextile in the direction of the pipe laying.

J. Trim excavation. Hand trim for bell and spigot pipe joints. Remove loose matter.

K. Excavated material shall be placed at locations and in such a manner that it does not create a hazard to pedestrian or vehicular traffic, or interfere with the function of existing drainage facilities or system operation.

L. Remove excess subsoil not intended for reuse from site.

M. Stockpile excavated material in area designated on site in accordance with Section 31 05 13, Soils for Earthwork.

3.8 TUNNELING

A. In lieu of open cut trenching as specified above, the Contractor may utilize tunnel methods for installation of pipe where ground conditions are favorable and such methods will not disturb foundations under curbs, sidewalks and other structures.

1. The Engineer must approve tunneling methods prior to utility installation.

2. Where tunneling is used, payment for the pipe installation will be made for the equivalent trench excavation and backfill as if the open cut method was used. Payment will not be made for surface restoration including pavement, curbs, sidewalks and other surface improvements whose replacement is avoided by the tunneling method.

3.9 SHEETING AND SHORING

A. Sheet, shore, and brace excavations to prevent danger to persons, new and existing structures, and adjacent and neighboring properties and to prevent caving, erosion, settlement, and loss of surrounding subsoil.

B. Support trenches more than 5 feet deep excavated through unstable, loose, or soft material. Provide sheeting, shoring, bracing, or other protection to maintain stability of excavation.

C. Repair damage caused by failure of the sheeting, shoring, or bracing and for settlement of filled excavations or adjacent soil.

D. Repair damage to new and existing Work from settlement, water or earth pressure or other causes resulting from inadequate sheeting, shoring, or bracing.

E. Design sheeting and shoring to be removed at completion of excavation work, unless shown otherwise in the Drawings.

F. Construction Sheeting Left in Place:

1. Furnish, install, and leave in place construction sheeting and bracing when specified or when indicated or shown on the Drawings.

2. Construction sheeting and bracing originally intended for temporary installation, placed by the Contractor to protect adjacent and neighboring structures, may be left in place if desired by the Contractor and approved by the Engineer. All such sheeting and bracing left in place shall be included in the cost for excavation.

3. Any construction sheeting and bracing which the Contractor has placed to facilitate its work may be ordered in writing by the Engineer to be left in place. The right of the Engineer to order sheeting and bracing left in place shall not be construed as creating an obligation on its part to issue such orders. Failure of the Engineer to order sheeting and bracing left in place shall not relieve the Contractor of its responsibility under the contract.

4. For sheeting and shoring to be left in place as part of the completed Work, cut off minimum 18 inches below finished grade.

3.10 COMPACTION

A. Testing will be required to show specified densities of compacted backfill are being achieved by the Contractor's compaction methods.

B. Moisture Control:

1. Moisture condition backfill material to within 2 percent of optimum moisture content required for compaction throughout each lift of the fill.

2. Add moisture to granular backfill by sprinkling during compaction operation.

3. Compaction by ponding or jetting is not permitted.

C. Compact all materials and areas that are not accessible for in-place density testing, as determined by the Engineer, in place by whatever equipment and method is practicable or specified, and as approved by the Engineer.

1. Perform compaction at such moisture content as is required to produce well-filled, dense, and firm material in place that will show no appreciable deflection or reaction under the compacting equipment.

3.11 BEDDING

A. All utility vaults, potable water pipe 4-inch nominal diameter and over, all steel pipe, all concrete sewer pipe, all plastic pipe, all pipe under existing or future structures or roadways, and any and all utilities at a depth greater than 6 feet shall be laid in pipe bedding material.

B. Unless otherwise noted in the Drawings, pipe or conduit of less than 4-inch diameter, outside structure lines and at a depth of less than 6 feet shall be bedded in native material properly shaped as specified below, all as detailed on the Drawings.

C. Compacted bedding material shall be placed the full width of the excavated trench to a depth as shown on the trench detail included in the Drawings.

1. In lieu of a detail, the depth shall be 6 inches.

D. Spread the bedding smoothly over entire width of trench to the proper grade so that the pipe is uniformly supported along the barrel.

E. Hand grade and compact each lift to provide a firm, unyielding surface along the entire pipe length. For rigid pipe, compact to at least 90 percent relative compaction.

F. Excavate bell holes at each joint to permit proper assembly and inspection of the joint.

G. Check grade and correct irregularities in bedding material.

H. Center pipes horizontally in trench width.

3.12 BACKFILLING

A. Backfill trenches to contours and elevations with unfrozen fill materials.

B. Systematically backfill to allow maximum time for natural settlement. Do not backfill over porous, wet, frozen, or spongy subgrade surfaces.

C. Maintain optimum moisture content of fill materials to attain required compaction density.

D. Place fill material, with the exception of CLSM, in continuous layers and compact in 6 to 8-inch lifts.

1. Prevent pipe from moving either horizontally or vertically during placement and compaction of pipe zone material.

2. Where trenches are under existing or future structures, paved areas, road shoulders, driveways or sidewalks, or where designated on the Drawings or specified elsewhere in these specifications, the trench backfill shall be Class B or Class E and pipe zone backfill shall be Class B or Class E. Class B backfill shall be compacted to 95 percent of maximum density at optimum moisture content.

3. Where trenches are outside existing or future structures, paved areas, road shoulders, driveways or sidewalks, or where designated on plans or specified elsewhere, the trench backfill shall be Class A and pipe zone backfill in these areas shall be Class B. For these locations, compaction of Class B backfill shall be to not less than 90 percent of maximum density at optimum moisture content. Class B backfill shall be compacted to not less than 95 percent of maximum density at optimum moisture content.

E. Employ placement method that does not disturb or damage nearby or adjacent foundation perimeter drainage or utilities in trench.

F. Do not use power-driven impact compactors to compact pipe zone material.

G. Backfill Immediately: All trenches and excavations shall be backfilled immediately after pipe or conduit is in approved condition to receive it and shall be carried to completion as rapidly as possible, unless otherwise directed by the Engineer.

H. Under no circumstances shall water be permitted to rise in open trenches after pipe has been placed.

I. Do not allow backfill material to free fall into the trench or allow heavy, sharp pieces of material to be placed as backfill until after at least 2 feet of backfill has been provided over the top of pipe.

J. Use hand compactors for compaction until at least 2 feet of backfill is placed over top of pipe. Thoroughly tamp each lift, including area under haunches, with handheld tamping bars supplemented by “walking in” and slicing material under haunches with a shovel to ensure that voids are completely filled before placing each succeeding lift.

K. Placement of Sand:

1. Place medium sand in lifts not exceeding 8 inches in uncompacted thickness.

2. Compact each lift to a minimum of 95 percent relative compaction prior to placing succeeding lifts.

L. Placement of CLSM:

1. Discharge from truck-mounted drum-type mixer into trench.

2. Place in lifts not exceeding 2 feet in thickness.

3. No compaction of CLSM is allowed.

4. Use steel plates to protect the CLSM from traffic a minimum of 24 hours. After 24 hours, the CLSM may be paved, or opened to traffic until permanent surface restoration is completed, if it has hardened sufficiently to prevent rutting.

M. New trenching shall not be started when earlier trenches need backfilling or the surfaces of streets or other areas need to be restored to a safe and proper condition.

N. Do not leave trench open at end of working day.

3.13 FIELD QUALITY CONTROL

A. All testing and reporting shall be conducted and completed by an independent laboratory provided and paid for by the CONTRACTOR.

B. Perform laboratory material tests in accordance with ASTM D1557 (AASHTO T180).

C. In-place compaction testing of pipeline backfill materials shall be performed at 2-foot elevation increments, one test per 200 lineal feet of pipeline trench as measured along pipe centerline.

1. The Engineer may reduce the frequency when satisfied with method of compaction.

2. The Engineer may direct testing at a higher frequency at no additional cost to the Owner upon failure to obtain specified densities or if the Contractor changes compaction equipment or methods of compaction.

3. The Engineer shall determine all test locations.

D. Perform in place compaction tests in accordance with the following:

1. Density Tests: ASTM D2922.
2. Moisture Tests: ASTM D3017.

E. When tests indicate Work does not meet specified requirements, remove Work, replace and retest at the sole expense of the Contractor.

3.14 SURFACE RESTORATION AND CLEANUP

A. Open Trenches: At the end of each work day, all open trenches shall be backfilled and all trenches within streets shall be temporarily paved or covered to the satisfaction of the Engineer and the local permitting agency.

   1. Temporary paving shall be replaced with permanent street paving at the completion of construction within street rights-of-way, or sooner, if deemed necessary by the ENGINEER.

   2. No gravel-filled trenches shall be left open within the street right-of-way at the end of the workday.

B. Topsoil:

   1. Where trenches cross lawns, garden areas, pastures, cultivated fields, or other areas on which reasonable topsoil conditions exist, remove the topsoil to the specified depth and place the material in a stockpile.

   2. Topsoil shall not be mixed with other excavated material.

   3. After the trench has been backfilled, the topsoil shall be replaced.

C. Clean up and remove all excess materials, construction materials, debris from construction, etc. Replace or repair any fences, mailboxes, signs, landscaping, or other facilities removed or damaged during construction. Replace all lawns, topsoil, shrubbery, flowers, etc., damaged or removed during construction. The Contractor shall be responsible for seeing that lawns, shrubs, etc. remain alive and leave premises in condition equal to original condition before construction.

END OF SECTION

SECTION 31 23 18

ROCK REMOVAL

PART 1 GENERAL

1.1 SUMMARY

A. This Section includes removal of subsurface rock during excavation by mechanical method. The use of explosives for rock removal is not permitting for this project.

B. Section Includes:

1. Removing identified and discovered rock during excavation.
2. Expansive tools to assist rock removal.

1.2 RELATED SECTIONS:

A. Section 31 22 13 - Rough Grading.

B. Section 31 23 16 - Excavation.

C. Section 31 23 17 - Trenching.

1.3 DEFINITIONS

A. Common Excavation: All excavation required for Work, regardless of the type, character, composition or condition of the material encountered. All excavation shall be classified as Common Excavation, unless provided for under Rock Removal below.

B. Common Material: All soils, aggregate, debris, junk, broken concrete, and miscellaneous material encountered in Common Excavation, excluding rock as defined below.

C. Rock: Solid mineral material, including boulders, solid bedrock, or ledge rock, with volume in excess of 1/2 cubic yard or solid material which, by actual demonstration, cannot be reasonably excavated with suitable machinery as defined herein. The Engineer may waive the requirements for actual demonstration if the material encountered is well-defined rock.

D. Rock Removal: Removal of rock as defined herein by systematic and continuous drilling, hammering, breaking, splitting or other methods approved by the Engineer.

E. Suitable Machinery: A track-mounted hydraulic excavator of the 52,800 to 72,500-pound class equipped with a single shank ripper.

1.4 SUBMITTALS

A. Section 01 33 00 - Submittal Procedures: Submittal procedures.

B. Shop Drawings: Indicate proposed method of rock removal.

C. Equipment: Manufacturer information regarding pound class of machinery proposed for rock removal.

D. Survey Report: Submit survey report mapping extent and locations of rock encountered, to be used in calculating total volume of rock removal.

1.5 PROJECT CONDITIONS

A. Conduct survey of rock uncovered in excavation for structures or trenching for utilities prior to removal of material.

PART 2 PRODUCTS - Not Used.

PART 3 EXECUTION

3.1 EXAMINATION

A. Verify site conditions and note subsurface irregularities affecting Work of this section.

3.2 PREPARATION

A. Identify required lines, levels, contours, and datum.

B. Engineer Approval for Rock Removal:

1. Prior to commencement of rock removal, expose all material anticipated to be rock by removing the common material above it and then notify the Engineer.

2. The Engineer, in association with the Contactor or the Contractor's representative, will measure the amount of material to be removed in an effort to reach a mutually agreeable volume for anticipated rock removal.

3. Prior to commencing the proposed rock removal, the Contractor must receive written approval by the Engineer stating the approximate volume of excepted rock removal to receive payment.

4. During rock removal activities, should it become apparent the previously agreed upon volume of rock removal will be exceeded, notify the Engineer immediately.

Should the Contractor proceed with rock removal in excess of the previously agreed upon volume, the Contractor will do so at their own risk and expense.

3.3 ROCK REMOVAL BY MECHANICAL METHOD

A. Excavate and remove rock by mechanical method.

1. Use single shank ripper to fracture rock.
2. Drill holes and use expansive tools and wedges to fracture rock.

B. Cut away rock at bottom of excavation to form level bearing.

C. Remove shaled layers to provide sound and unshattered base for footings and foundations.

D. In utility trenches, excavate to 6 inches below invert elevation of pipe and 24 inches wider than pipe diameter.

E. For vaults and other structures, excavate to the depth necessary to install the structure and to a maximum of 18 inches beyond the outside walls of the vault or structure.

F. Remove excavated materials from site. Excavated materials to be reused for site landscaping or rip rap installation on other areas of the project shall be stockpiled by the Contractor at a location other than the project site until such time as it is to be installed.

G. Correct unauthorized rock removal associated with structural excavations in accordance with backfilling and compacting requirements of Section 31 23 16, Excavation and as directed by Engineer.

H. Correct unauthorized rock removal associated with utility work in accordance with backfilling and compacting requirements of Section 31 23 17, Trenching and as directed by Engineer.

I. If material which would be classified as rock as defined herein is mechanically removed with equipment of a larger size than specified as Suitable Machinery herein, it shall be understood that any added costs for the removal of rock by this method shall be included in the unit price for common excavation and not paid for under this pay item. If material which would be classified as rock as defined herein is mechanically removed without [blasting,] hammering, breaking or splitting, it will be considered common excavation and not paid for under this pay item. If equipment larger than the suitable machinery as defined herein is brought on the project site for the sole purpose of rock removal without hammering, breaking or splitting, then such excavation will be considered rock removal.

3.4 FIELD QUALITY CONTROL

A. Request visual inspection of foundation bearing surfaces by Engineer before installing subsequent work.

END OF SECTION

SECTION 31 23 19

DEWATERING

PART 1 GENERAL

1.1 SUMMARY

A. This Section includes temporary dewatering and surface water control systems for open excavations and utility trenches.

B. Section includes:

1. Dewatering systems.
2. Surface water control systems.
3. System operation and maintenance.
4. Water disposal.

1.2 RELATED SECTIONS

A. Section 31 05 16 - Aggregates for Earthwork.
B. Section 31 23 16 - Excavation.
C. Section 31 23 17 - Trenching.

1.3 SUBMITTALS

A. Dewatering Plan:

1. Descriptions of proposed groundwater and surface water control facilities including, but not limited to, equipment; methods; standby equipment and power supply; pollution control facilities; discharge locations to be utilized; and provisions for immediate temporary water supply as required by this Section.

2. Plan to be reviewed by the Engineer prior to the beginning of construction activities requiring dewatering. Review by the Engineer of the design shall not be construed as a detailed analysis of the adequacy of the dewatering system, nor shall any provisions of the above requirements be construed as relieving the Contractor of its overall responsibility and liability for the work.

1.4 DEFINITIONS

A. Dewatering includes the following:

1. Lowering of ground water table and intercepting horizontal water seepage to prevent ground water from entering excavations, trenches, tunnels, and /or shafts.

2. Reducing piezometric pressure within strata to prevent failure or heaving of excavations, trenches, tunnels, and /or shafts.

3. Disposing of removed water.

B. Surface Water Control: Removal of surface water within open excavations.

1.5 QUALITY CONTROL

A. All dewatering operations shall be adequate to assure the integrity of the finished project and shall be the responsibility of the Contractor.

B. Provide all labor, materials, and equipment necessary to dewater trench and structure excavations, in accordance with the requirements of the Contract Documents.

C. Secure all necessary permits to complete the requirements of this Section.

D. Control the rate and effect of the dewatering in such a manner as to avoid all objectionable settlement and subsidence.

E. Where the critical structures or facilities exist immediately adjacent to areas of proposed dewatering, reference points shall be established and observed at frequent intervals to detect any settlement which may develop.

1. The responsibility for conducting the dewatering operation in a manner which will protect adjacent structures and facilities rests solely with the Contractor.

2. The cost of repairing any damage to adjacent structures and restoration of facilities shall be the responsibility of the Contractor.

PART 2 PRODUCTS

2.1 EQUIPMENT

Dewatering, where required, may include the use of well points, sump pumps, temporary pipelines for water disposal, rock or gravel placement, and other means. Standby pumping equipment shall be maintained on the jobsite.

PART 3 EXECUTION

3.1 DEWATERING

A. Provide all equipment necessary for dewatering.

1. Have on hand, at all times, sufficient pumping equipment and machinery in good working condition.

2. Have available, at all times, competent workers for the operation of the pumping equipment.

3. Adequate standby equipment shall be kept available at all times to insure efficient dewatering and maintenance of dewatering operation during power failure.

B. Dewatering for structures and pipelines shall commence when groundwater is first encountered, and shall be continuous until such times as water can be allowed to rise in accordance with the provisions of this Section or other requirements.

C. Site Grading:

1. At all times, site grading shall promote drainage.

2. Surface runoff shall be diverted from excavations.

3. Water entering the excavation from surface runoff shall be collected in shallow ditches around the perimeter of the excavation, drained to sumps, and be pumped or drained by gravity from the excavation to maintain a bottom free from standing water.

D. Dewatering shall at all times be conducted in such a manner as to preserve the undisturbed bearing capacity of the subgrade soils at proposed bottom of excavation.

E. If foundation soils are disturbed or loosened by the upward seepage of water or an uncontrolled flow of water, the affected areas shall be excavated and replaced with drain rock.

F. Maintain the water level below the bottom of excavation in all work areas where groundwater occurs during excavation construction, backfilling, and up to acceptance.

G. Flotation shall be prevented by maintaining a positive and continuous removal of water. The Contractor shall be fully responsible and liable for all damages which may result from failure to adequately keep excavations dewatered.

H. If well points or wells are used, they shall be adequately spaced to provide the necessary dewatering and shall be sandpacked and/or other means used to prevent pumping of fine sands or silts from the subsurface. A continual check shall be maintained to ensure that the subsurface soil is not being removed by the dewatering operation.

I. Dispose of water from the work in a suitable manner without damage to the environment or adjacent property. No water shall be drained into work built or under

construction without prior consent of the Engineer. Water shall be filtered using an approved method to remove sand and fine sized soil particles before disposal into any drainage system.

J. The release of groundwater to its static level shall be performed in such a manner as to maintain the undisturbed state of the natural foundation soils, prevent disturbance of compacted backfill and prevent flotation or movement of structures, pipelines, and sewers.

K. Dewatering of trenches and other excavations shall be considered as incidental to the construction of the work and all costs thereof shall be included in the various contract prices in the bid forms.

END OF SECTION

SECTION 31 23 24

FLOWABLE FILL

PART 1 GENERAL

1.1 SUMMARY

A. This Section includes flowable lean concrete mix used for structure backfill, utility bedding and backfill and other subgrade Site Work. Applications also include filling abandoned structures and utilities that remain in place.

B. Section Includes:

1. Structure backfill.
2. Utility bedding.
3. Utility backfill.
4. Filling abandoned utilities.

1.2 RELATED SECTIONS

A. Section 33 11 50 - Existing Pipe Abandonment.
B. Section 31 23 16 - Excavation.
C. Section 31 23 17 - Trenching.
D. Section 33 11 92.30 – Steel Water Utility Transmission Piping.

1.3 DEFINITIONS

A. Flowable Fill: Also referred to as Controlled Low Strength Material (CLSM) elsewhere in the Specifications. Lean cement concrete fill.

B. Utility: Any buried pipe, duct, conduit, manhole, tank, or cable.

1.4 REFERENCE STANDARDS

A. ASTM International:

1. ASTM C33 - Standard Specification for Concrete Aggregates.

2. ASTM C94 - Standard Specification for Ready-Mixed Concrete.

3. ASTM C150 - Standard Specification for Portland Cement.

4. ASTM C260 - Standard Specification for Air-Entraining Admixtures for Concrete.

5. ASTM C403 - Standard Test Method for Time of Setting of Concrete Mixtures by Penetration Resistance.

6. ASTM C494 - Standard Specification for Chemical Admixtures for Concrete.

7. ASTM C618 - Standard Specification for Coal Fly Ash and Raw or Calcined Natural Pozzolan for Use as a Mineral Admixture in Concrete.

8. ASTM C1017 - Standard Specification for Chemical Admixtures for Use in Producing Flowing Concrete.

9. ASTM C1040 - Standard Test Methods for Density of Unhardened and Hardened Concrete in Place By Nuclear Methods.

10. ASTM D4832 - Standard Test Method for Preparation and Testing of Controlled Low Strength Material (CLSM) Test Cylinders.

1.5 SUBMITTALS

A. Section 01 33 00 - Submittal Procedures: Requirements for submittals.

B. Manufacturer's Certificate: Certify that products meet or exceed specified requirements.

C. Field Quality-Control Submittals:

1. Mix Design:

a. Furnish flowable fill mix design for each specified strength.

b. Furnish separate mix designs when admixtures are required for the following:

1) Flowable fill Work during hot and cold weather.
2) Air entrained flowable fill Work.

c. Identify design mix ingredients, proportions, properties, admixtures, and tests.

2. Furnish test results to certify flowable fill mix design properties meet or exceed specified requirements.

D. Delivery Tickets:

1. Furnish duplicate delivery tickets indicating actual materials delivered to Project Site.

1.6 QUALITY ASSURANCE

A. In-place testing of Flowable Fill: In accordance with ASTM C403.
B. Compressive testing of Flowable Fill: In accordance with ASTM D4832.

1.7 ENVIRONMENTAL REQUIREMENTS

A. Minimum Conditions: The following minimum conditions shall be met at time of flowable fill placement.

1. Do not install flowable fill during inclement weather.

2. Ambient temperature must be at least 34 degrees F (4 degrees C) and rising.

3. Flowable fill shall be at 40 degrees F (4 degrees C).

4. Subgrade on which flowable fill is to be placed shall be free of disturbed or soft material, debris and water.

1.8 FIELD MEASUREMENTS

A. Verify field measurements before installing flowable fill to establish quantities required to complete the Work.

PART 2 PRODUCTS

2.1 FLOWABLE FILL

A. Flowable Fill:

1. Composed of cement, pozzolans, fine aggregate, water, and admixtures.

2. Low cement content.

3. Non-segregating, self-consolidating, free-flowing and excavatable material which will result in a hardened, dense, non-settling fill.

4. Compressive strength at 28 days of 100 to 200 psi, if not otherwise shown in Drawings or specified.

2.2 MATERIALS

A. Portland Cement: ASTM C150, Type I – Normal.
B. Fine Aggregates: ASTM C33.
C. Water: Clean and not detrimental to concrete.

2.3 ADMIXTURES

A. Air Entrainment: ASTM C260.
B. Chemical Admixture: ASTM C494.
C. Fly Ash: Not permitted.
D. Plasticizing: ASTM C1017 Type I, plasticizing.

2.4 MIXES

A. Mix and deliver flowable fill according to ASTM C94, Option C.

B. Flowable Fill Design Mix:

ITEM	PROPERTIES
Cement Content	75 to 100 lb/cu yd
Fly Ash Content	None
Water Content	As specified
Air Entrainment	5 to 35 percent
28-Day Compressive Strength	Maximum 200 psi.
Unit Mass (Wet)	80 to 110 pcf
Temperature, Minimum at Point of Delivery	50 degrees F (10 degrees C)

C. Provide water content in design mix to produce self-leveling, flowable fill material at time of placement.

D. Design mix air entrainment and unit mass are for laboratory design mix and source quality control only.

2.5 SOURCE QUALITY CONTROL

A. Test and analyze properties of flowable fill design mix and certify results for the following:

1. Design mix proportions by weight of each material.

2. Aggregate: ASTM C33 for material properties and gradation.

3. Properties of plastic flowable fill design mix including:

   a. Temperature.
   b. Slump.
   c. Air entrainment.
   d. Wet unit mass.
   e. Yield.
   f. Cement factor.

4. Properties of hardened flowable fill design mix including:

   a. Compressive strength at 1 day, 7 days, and 28 days. Report compressive strength of each specimen and average specimen compressive strength.

   b. Unit mass for each specimen and average specimen unit mass at time of compressive strength testing.

B. Prepare delivery tickets containing the following information:

1. Project designation.
2. Date.
3. Time.
4. Class and quantity of flowable fill.
5. Actual batch proportions.
6. Free moisture content of aggregate.
7. Quantity of water withheld.

PART 3 EXECUTION

3.1 EXAMINATION

A. Verify excavation specified in Section 31 23 16, Excavation and trenching specified in Section 31 23 17, Trenching is complete.

B. Verify utility installation as specified in elsewhere in the specifications is complete and tested before placing flowable fill.

C. Verify excavation is dry and dewatering system is operating, as may be required, prior to placement of flowable fill.

3.2 PREPARATION

A. Support and restrain utilities to prevent movement and flotation during installation of flowable fill.

B. Protect structures and utilities from damage caused by hydraulic pressure of flowable fill before fill hardens.

C. Protect utilities and foundation drains to prevent intrusion of flowable fill.

3.3 INSTALLATION - FILL, BEDDING, AND BACKFILL

A. Place flowable fill by chute, pumping or other methods as approved by Engineer.

B. Place flowable fill in lifts to prevent lateral pressures from exceeding structural capacity of structures and utilities.

C. Place flowable fill evenly on both sides of utilities to maintain alignment.

D. Place flowable fill to elevations indicated on Drawings without vibration or other means of compaction.

3.4 INSTALLATION - FILLING ABANDONED UTILITIES

A. As specified in Section 33 11 50, Existing Pipe Abandonment.

3.5 FIELD QUALITY CONTROL

A. Perform inspection and testing according to ASTM C94.

1. Take samples for tests for every 100 cubic yards of flowable fill, or fraction thereof, installed each day.

2. Sample, prepare and test four compressive strength test cylinders according to ASTM D4832. Test one specimen at 3 days, one at 7 days, and two at 28 days.

3. Measure temperature at point of delivery when samples are prepared.

B. Further construction proceeding upon placed flowable fill will be permitted only after initial set is attained, as measured by ASTM C 403.

1. Perform in place penetration (density) tests using hand held penetrometer to measure penetration resistance of hardened flowable fill.

2. Perform tests at locations as directed by Engineer.

C. Defective Flowable Fill: The Engineer reserves the right to reject all flowable fill failing to meet the following test requirements or flowable fill delivered without the following documentation.

1. Test Requirements:

a. Minimum temperature at point of delivery.
b. Compressive strength requirements for each type of fill.

2. Documentation: Duplicate delivery tickets.

D. No traffic or construction equipment shall be allowed on flowable fill for a least 24 hours after placement.

3.6 CLEANING

A. Remove spilled and excess flowable fill from Project Site.

B. Restore facilities and Site areas damaged or contaminated by flowable fill installation to existing condition before installation.

END OF SECTION

SECTION 31 50 00

EXCAVATION SUPPORT AND PROTECTION

PART 1 GENERAL

1.1 SUMMARY

A. This Section includes shoring and support systems of all types necessary to protect existing utility facilities and new utility facilities.

B. The Contractor is responsible for the selection and design of excavation support systems and the design of utility support systems in conformance with Federal, State and City requirements and the minimum design criteria specified herein.

C. Temporary shoring is to be installed for protection of the existing trees to remain, structures to remain, buried utilities to remain, adjacent roadways and walkways and surrounding properties.

D. Care must be taken during the planning and construction of earth support systems to minimize settlements and displacements of the shoring system itself and to surrounding properties.

1.2 RELATED SECTIONS

A. Section 31 23 16, Excavation.
B. Section 31 23 17, Trenching
C. Section 31 23 19, Dewatering.
D. Section 33 92 10.30, Steel Water Utility Transmission Piping.

1.3 DESIGN CRITERIA

A. Design excavation support systems and all components to support the earth pressures, unrelieved hydrostatic pressures, utility loads, equipment, traffic, railroad, and construction loads including impact, and other surcharge loads in such manner as will allow the safe and expeditious construction of the permanent structures to minimize ground movement or settlement, and to prevent damage to adjacent structures, roadways, railroads and utilities.

B. Design support members to resist the maximum loads expected to occur during the excavation and support removal stages.

C. Design system so that water seepage is minimized. Provide dewatering and positive means for preventing sloughing and containing material behind lagging.

D. Design system to prevent sloughing and to contain running sand and silt behind the lagging.

E. Vertical support capacity shall be provided for wall systems and internal bracing elements for loads due to vertical force components and live loads on any portion of the system.

1.4 SUBMITTALS

A. Section 01 33 00, Submittals - Submittal Procedures: Requirements for submittals.

B. Excavation Support Systems

1. Plans and details for trench and excavation support systems.

a. Shop drawings and supporting calculations shall meet the specified design criteria requirements and include the following:

1) Arrangement, size and details for individual excavation support system.

2) Construction methods and sequencing to be used for the installation and removal of each excavation support system.

3) Contingency plan for alternative procedures to be implemented if the excavation support system is found to perform unfavorably or if obstructions are encountered in the installation.

2. Provide for Engineer review prior to the beginning of construction activities requiring such systems.

3. No excavations shall be started until the submittal review is complete.

4. Review by the Engineer of the submitted design shall not be construed as a detailed analysis of the adequacy of the support system, nor shall any provisions of the above requirements be construed as relieving overall responsibility and liability for the work.

C. Excavation Plan

1. Designed to prevent damage to existing and surrounding properties.

D. Settlement Monitoring Plan, to include the following:

1. Detailed location of settlement monitoring points shown on the Drawings.

2. Reference benchmarks (City and/or County) to be employed.

3. Survey procedures (including name of survey crew leader and equipment to be used).

4. Approach to recording surveyed readings and means of reporting of results to the Owner.

E. Contingency Plan

1. Provide alternative procedures to be implemented if the excavation support systems are found to perform unfavorably or if obstructions are encountered in the installation of excavation support systems.

2. Contingency plan is to demonstrate a preparedness to mitigate the effects of movement or settlement.

3. The following minimum requirements for a contingency plan are:

a. Measures to be taken in order to protect existing facilities and neighboring properties from additional settlement or movement.

b. Identification of all material, manpower, equipment and other items to be available and onsite at all times while excavations and dewatering activities are ongoing and reasonably after the work has been completed.

F. Site Conditions Survey

1. Videotape surveys, photographs and other data significant in noting the pre-construction conditions of the existing project site, as well as the pre-construction conditions of the neighboring properties and their existing structures.

2. Provide to the OWNER for record purposes prior to, but not more than three weeks before, commencement of any construction activities.

3. A complete set of all photographs and survey data of the post-construction conditions shall be completed and submitted prior to final inspection by the Owner and Engineer.

1.5 QUALITY ASSURANCE

A. Contractor is solely responsible for quality assurance of temporary shoring.

B. At each excavation support system location, provide the following:

1. Continual verification system is planned, executed, and maintained in accordance with applicable codes, regulations and good construction practice.

2. Systematic observation of suitability of shoring materials.

3. Installation, excavation, settlement and lateral deflection monitoring.

4. Groundwater control.

5. Adjacent construction activities.

6. Other factors, as necessary.

C. Continually verify installation of the shoring is in conformance with the plans prepared by the Contractor's design engineers.

1.6 PERMITTING

A. Secure all permits necessary to complete the requirements of this Section.

PART 2 PRODUCTS

2.1 GENERAL

A. Materials and equipment shall be safe and in good condition and shall conform to local, state and federal codes.

PART 3 EXECUTION

3.1 GENERAL

A. Provide sheeting, shoring and other protection and support systems wherever required, in accordance with current local, state and federal laws, codes and ordinances.

B. The Contractor is solely responsible for excavation protection and worker safety.

C. The Contractor shall be solely responsible for the protection of existing utilities and structures. Under no circumstance shall work threaten the integrity (physical and operational) of these utilities and/or structures.

3.2 EXCAVATION SUPPORT SYSTEMS

A. The excavation support systems shall not disturb the state of soil adjacent to the trench or excavation and below the excavation bottom.

B. Water control measures shall be provided at all times in accordance with the requirements specified in Section 31 23 19, Dewatering.

C. The support system shall extend below the main excavation bottom elevation to a depth adequate to prevent hydrostatic uplift, seepage and piping, and lateral movement and to adequately support applied vertical loads.

D. Damage to existing utilities or structures during installation of excavation support system shall be avoided. If damage occurs it shall be repaired at no cost to the Owner and to the satisfaction of the utility owner.

E. A company representative from the excavation support system shall be onsite during initial setup of the system. Install excavation support system in strict conformance with the representative's recommendations.

3.3 CONTINGENCY PLAN IMPLEMENTATION

A. Excess movements or settlements: Work shall be stopped immediately and the causes of excess or detrimental movements evaluated if:

1. Damage is noted to existing site features or surrounding properties.

2. Shoring wall movements exceed the limits specified herein or per submitted calculations.

B. Immediately notify the Engineer and begin the implementation of the approved contingency plan to mitigate the effects of settlement or movement occurred.

3.4 REMOVAL OF SUPPORT SYSTEMS

A. Removal of excavation support systems shall be performed in a manner that does not disturb or damage adjacent new or existing structures or utilities.

B. Fill all voids immediately with specified backfill material.

C. All damage to property resulting from removal shall be promptly repaired at no cost to the OWNER. The Engineer shall be the sole judge as to the extent and determination of the methods and materials for repair.

END OF SECTION

SECTION 32 12 16

ASPHALT CONCRETE PAVEMENT

PART 1 GENERAL

1.1 SCOPE

This section includes the construction of asphalt concrete pavement.

1.2 REFERENCE STANDARDS

A. References herein to "AASHTO" shall mean Association of American State Highway Transportation Officials.

B. Standard Specifications: Where the term "Standard Specifications" is used, such reference shall mean the current edition of the Oregon Department of Transportation (ODOT) Standard Specifications for Highway Construction. Where reference is made to a specific part of the Standard Specifications, such applicable part shall be considered as part of this section of the Specifications. In case of a conflict in the requirements of the Standard Specifications and the requirements stated herein, the requirements herein shall prevail.

1.3 DEFINITIONS

A. Maximum Density Test (MDT): Theoretical maximum density of the bituminous mixture determined by multiplying the theoretical maximum specific gravity, determined by ASTM D2041 (Rice), by 62.4 pounds per cubic foot.

1.4 SUBMITTALS

A. Aggregate Qualification Tests: In accordance with Standard Specifications Section 00640 for aggregate used in aggregate base.

B. Aggregate Qualification Tests: In accordance with Standard Specifications Section 00745 for aggregate used in asphalt concrete.

C. Job mix formula shall be an approved job mix formula. Submit formula, supplier, and product identification to the Engineer 30 days prior to start.

1. Definite percentage for:

    a. Each sieve fraction.
    b. New asphalt cement.
    c. Recycled asphalt pavement.

2. Temperature of completed mix when discharged from mixer.

3. Character and quantity of anti-strip and recycling agents.

1.5 QUALITY ASSURANCE

A. All testing to determine compliance with the specifications shall be performed by an independent testing laboratory contracted by the Contractor and approved by the Engineer. All testing costs shall be borne by the Contractor.

B. A minimum of five (5) nuclear densometer readings shall be taken in random locations within every test area. Each test area shall not exceed 200 tons of asphalt; however, smaller areas may be designated by the Engineer.

C. The surface smoothness of the new asphalt concrete pavement shall be such that when a 10-foot straightedge is laid longitudinally across the paved area in any direction, the new pavement shall not deviate from the straightedge more than 1/8 inch. Surface drainage shall be maintained. Additionally, paving must conform to the design grade and crown and contain no abrupt edges, low or high areas or any other imperfections as determined by the Engineer. Pavement construction not meeting these requirements will be repaired by grinding the existing pavement to a 1 1/2-inch depth and replacing with Level 3, ½ -inch dense graded Asphaltic Concrete the full width at no cost to Owner.

1.6 PRE-PAVING CONFERENCE

A. Any supervisory personnel of the Contractor and any subcontractors who are to be involved in the paving work shall meet with the Engineer, at a time mutually agreed upon, to discuss methods of accomplishing all phases of the paving work.

B. The Contractor shall be prepared to review the size and type of equipment to be used and the anticipated rate of placement to determine equipment needs.

PART 2 PRODUCTS

2.1 AGGREGATE MATERIAL

A. Aggregate Base for Dense Graded Asphalt Concrete: The aggregate material shall be a clean, well-graded crushed base aggregate conforming to the Standard Specifications. Base course shall be 1-1/2 inch minus aggregate and leveling course shall be 3/4-inch minus aggregate.

2.2 ASPHALT CONCRETE PAVEMENT

A. Dense Graded Hot Mix Asphalt Concrete

1. Use Level 2, ½ inch-dense graded, PG 64-22 HMAC. Conform to the requirements as specified in Section 00745 of the Standard Specifications.

2. Asphaltic concrete pavement delivered to the site shall be accompanied by a ticket with the approved "job mix formula" number shown. Loads without tickets identifying the job mix formula will not be accepted.

3. Percent of recycled asphalt pavement used in new asphalt pavement shall not exceed 30 percent. Recycled asphalt pavement may not be used in top wearing course unless otherwise approved by the Engineer.

B. Tack Coat

In accordance with Standard Specifications. Use AR 4000, AC-20 asphalt or CSS-1 emulsified asphalt C.

C. Seal and Cover Coat

Asphalt material shall be CRS-2 cationic emulsified asphalt. Cover stone shall conform to size ¼ -inch -#10 aggregate in the Standard Specifications.

D. Subgrade Geotextile

1. Dense Graded AC Mix-For subgrade separation using dense graded asphalt concrete, use subgrade geotextile with Certification Level B as specified in Section 02320 of the Standard Specifications.

E. Subgrade Stabilization

In the event that unstable materials are encountered during excavation, the additional excavation and installation of geotextile fabric and twelve (12) inches of rock substructure will be required, as directed. Conform to the requirements as specified in Section 00331 of the Standard Specifications. For subgrade separation, use subgrade geotextile with Certification Level B as specified in Section 02320 of the Standard Specifications.

PART 3 EXECUTION

3.1 AGGREGATE PAVEMENT BASE

A. Place pavement base to the depth shown on the plans or as specified in all cases, pavement base shall be compacted to a minimum depth of 6 inches. Bring the top of the pavement base to a smooth, even grade at a distance below finished grade equivalent to the required pavement depth.

B. Compact the pavement base with mechanical vibratory or impact tampers to a density of not less than 95 percent of the maximum density, as determined by AASHTO T-99.

C. Obtain the Engineer’s acceptance of the subgrade before beginning construction of the aggregate base course.

D. When, in the judgment of the Engineer, the weather is such that satisfactory results cannot be secured, suspend operations. Place no aggregate base course in snow or in soft, muddy, or frozen subgrade.

E. If the required compacted depth of aggregate base course exceeds six (6) inches, construct in two or more lifts of approximately equal thickness. Maximum compacted thickness of any one lift shall not exceed six (6) inches. Compact each layer to the specified density before a succeeding lift is placed.

3.2 ASPHALT CONCRETE PAVEMENT

A. Construct asphalt concrete pavement in accordance with Section 00745 of the Standard Specifications.

B. Conform to the requirements for prime coat and tack coat in the Standard Specifications. Tack coat all edges of existing pavement, manhole and clean out frames, inlet boxes and like items. When rate is not specified, asphalt will be applied at the rate of 0.1 gallon per square yard.

C. Obtain the Engineer's acceptance of the aggregate base course before beginning construction of the asphalt concrete wearing course.

D. Hot mix asphalt shall be placed on dry, prepared surfaces, when air temperature in the shade of 40° F or warmer, unless otherwise authorized by the Engineer.

E. Placing asphalt pavement during rain or other adverse weather conditions will not be permitted unless otherwise authorized by the Engineer, except that asphalt mix in transit at the time these adverse conditions occur may be placed provided it is of proper temperature, the mix has been covered during transit, and it is placed on a foundation free from mud or free-standing water.

F. Correct any defects in material and workmanship, as directed, when determined detrimental by the Engineer. These include segregation of materials, non-uniform texture, and fouled surfaces preventing full bond between successive spreads of mixture. The corrections or replacement of defective material or workmanship shall be at the Contractor's expense.

G. Compact the bituminous mixture to at least 92 percent of the Theoretical Maximum Density.

H. The finished surface of each course of layer of mixture shall be of uniform texture, smooth, and free of defects and shall closely parallel that specified for the top surface finished grade. Remove and replace boils and slicks immediately with suitable materials.

I. The surface of each layer when tested with a Contractor-furnished 10-foot straightedge shall not vary from the testing edge by more than 0.02-foot for underlying courses of pavements and 0.015-foot for finished top courses or wearing courses of pavements. At no point shall the finished top of the wearing course vary more than 0.03-foot from the specified finished grade.

J. Lift thickness shall be as shown on the drawings or specified, but not to exceed 3 inches.

K. Do not place asphalt concrete pavement on emulsified asphalt (tack coat) until the asphalt separates from the water (breaks) but before it loses its tackiness.

L. Asphalt and sand seal edges where new asphalt concrete meets existing pavement.

3.3 FIELD QUALITY CONTROL

A. Job mix will be sampled immediately behind the paving machine.

B. Temperature of the mix will be measured immediately behind the paver.

C. The theoretical maximum specific gravity of the bituminous mixture will be determined in accordance with ASTM D2041.

D. Properties of the job mix will be measured using ASTM D2041.

E. Density of the compacted job mix will be measured in accordance with ASTM D2922.

3.4 ADJUSTMENT OF EXISTING MANHOLE COVERS AND VALVE BOXES

Prior to placing asphalt concrete pavement, the CONTRACTOR shall make all necessary adjustments to existing manhole frames and covers and valve box covers to ensure that the tops of the manhole covers or valve box lids are flush with the finished grade of the adjoining pavement or ground surface, and that valve boxes and PVC pipes are centered and plumb over operating nut valve.

END OF SECTION

SECTION 32 91 21

FINISH GRADING AND SEEDING

PART 1 GENERAL

1.1 SCOPE

A. This section includes finish grading, erosion control, and establishment of seeding, complete, including furnishing and delivery of labor, materials and equipment.

B. Section Includes:

1. Topsoil.
2. Imported topsoil.
3. Soil conditioners.
4. Fertilizer.
5. Seed mixes.
6. Erosion control matting.
7. Seeding mulch.
8. Tackifier.
9. Guarantee, maintenance and warranty.

1.2 RELATED SECTIONS

A. Section 31 05 13, Soils for Earthwork.

1.3 SUBMITTALS

A. The following submittals are required as part of this work:

1. Proof of procurement and contract for delivery of plant material.

2. Schedule for delivery of plant material for inspection prior to planting.

3. Sources of plant materials, and identification tags visible for each plant.

4. Color-coded tagging system for all plant material species. (Flag all plant materials prior to installation.)

B. Maintenance Plan: Per the requirements of Section 32 90 00, Planting.

PART 2 MATERIALS

2.1 TOPSOIL

A. Topsoil Type TS1, Select Native Topsoil Material, in accordance with Section 31 05 13, Soils for Earthwork.

2.2 IMPORTED TOPSOIL

A. Topsoil Type TS2, Imported Topsoil Material, in accordance with Section 31 05 13, Soils for Earthwork.

2.3 SOIL CONDITIONERS

A. In accordance with requirements of Section 32 90 00, Planting.

2.4 FERTILIZER

A. Slow Release Fertilizer:

1. Slow release fertilizer for use in erosion control seeding containing 22% nitrogen, 16% available phosphoric acid, and 8% potash, including a minimum of 2% sulfur.

2. The fertilizer shall contain not less than 30% available water-insoluble nitrogen derived by incorporating urea formaldehyde.

2.5 SEED MIX

A. Seed shall be certified, blue tag, clean, delivered in original, unopened packages bearing an analysis of the contents, guaranteed 95% pure and to have a minimum germination rate of 95% in one year.

B. Seed for all cut slopes and exposed areas shall be:

Sunmark Seeds "Stream Bank Plus" native seed mix

Seed Mix Ingredients:	Application Rate:
Native red fescue (*Festuca Rubra*) – 50% California brome (*Bromus carinatus*) – 20% Blue wildrye (*Elymus rparius*) – 20% Large leaf lupine (*Lupinus polyphyllus*) – 10%	2 lbs./1,000 square feet

2.6 EROSION CONTROL SEEDING MULCH

A. Wood or straw mulch processed so that the fibers are uniformly suspended under agitation in water.

B. Blend the mulch with seed, fertilizer, and other typical additives in a hydroseeding mixture to form a homogeneous slurry.

C. The processed mulch shall have the ability to hold grass seed in contact with soil.

D. Fibers shall have moisture-absorption and percolation properties to form a blotter-like cover on the ground.

E. Ship in packages of uniform weight (+/- 5%) and labeled with manufacturer's name and air-dry weight.

2.7 EROSION CONTROL MATTING

A. Jute Matting:

1. Jute matting shall consist of a uniform, open, plain weave of single jute yarn.

2. The yarn shall be of loosely-twisted construction and shall not vary in thickness by more than one-half of its normal diameter.

3. The weave shall provide openings of about 1 square inch.

4. Furnish the matting in widths of 45 inches or more, continuous lengths of not less than 150 feet, and weigh not less than 0.9 pounds per square yard.

B. Staples: 12 gauge or heavier steel wire which is bent to a U-shape 2 inches wide.

C. Excelsior Matting:

1. Consisting of a machine-produced blanket of curled wood fibers, of which 80% are 6-inches or longer.

2. Furnish a blanket of uniform thickness, with the fiber evenly distributed over the entire area of the mat.

3. Matting shall have a minimum dry weight of 0.8 pounds per square yard (+/- 10%). Furnish in a minimum 36-inch wide rolls.

2.8 TACKIFIER

A. Emulsion designed to retain moisture and heat in the soil.
B. Mulch shall be chemically inert, nontoxic to plants, humans, and animals.

C. Tackifier shall be J-Tac, Sentinnel Tackifier additive, or equal.

PART 3 EXECUTION

3.1 FINISH GRADING PROCEDURES

A. Mix topsoil with rough grade fill material and mix thoroughly to a depth of 8-inches with soil amendments in the following proportions:

Topsoil	6-inches
Sand	1-inch
Organic Material	1-inch

B. Finish Grading: Spread fill/topsoil material and rake the area to a uniform grade so that all areas drain, as indicated on the Drawings.

C. Preparation of Seedbed: Remove all trash and stones exceeding 2 inches prior to seeding.

3.2 TIME OF SEEDING

A. Conduct seeding operations under favorable weather conditions during seasons which are normal for such work generally from April 1 to June 1, and Sept. 1 to November 1.

B. Guarantee germination of erosion control seeding by November 1 at the latest.

C. Seed all native plant species in fall only.

3.3 EROSION CONTROL MATTING

A. Erosion control matting shall be placed on all slopes with a slope ratio of 2:1 and greater, or as directed by the Engineer.

B. Matting shall be laid flat in single thickness strips paralleling the direction of probable water flow.

C. Multiple strips of matting shall overlap in shingle fashion.

D. Adjacent strips of matting shall be overlapped a minimum of 1-foot, or as recommended by the manufacturer.

E. The erosion matting shall be in contact with the soil at all points and shall be held in place with wire staples, or as recommended by the manufacturer.

F. Anchor the matting in ditches at the top of the slope to ensure it will stay in place.

G. The installation and minimum spacing of wire staples shall be as per manufacturer's specifications.

3.4 SEEDING

A. Seeding operations shall occur in two applications.

1. The first application shall include seed, fertilizer, and mulch.

2. The second application shall consist of tackifier and mulch only and be applied immediately after the first seeding. A second application of fertilizer shall be made two months after initial seeding at the rate indicated below.

B. See Drawings for specified seed mixes. Apply seed mixes per supplier’s recommendations.

3.5 INSPECTIONS

The work will be inspected for coverage and rate during placement.

END OF SECTION

SECTION 33 01 30.16

TV INSPECTION OF PIPELINES

PART 1 GENERAL

1.1 SUMMARY

A. Section Includes:

1. Pipeline flushing and cleaning.
2. TV inspection of pipelines.
3. Audio-video recording of pipeline interior.

B. Related Requirements:

1. Section 33 13 00 – Testing and Disinfecting of Water Utility Piping.
2. Section 33 92 10.30 – Steel Water Utility Transmission Piping.

1.2 SUBMITTALS

A. Section 01 33 00 - Submittal Procedures: Requirements for submittals.

B. Submit proposed method for disinfecting CCTV equipment prior to inserting into potable water pipeline.

C. Submit completed narrated DVD with TV inspection log and proposed method for pipe joint restraint for each joint.

D. DVDs become property of City of West Linn.

E. Inspection Log:

1. Include following minimum information:

a. Stationing and location of existing pipe joints.
b. Clock time references.
c. Infiltration/inflow defects.
d. Cracks.
e. Leaks.
f. Offset joints.
g. Other information required to assess condition of water pipeline.

F. Qualifications Statement:

1. Submit qualifications for applicator.

1.3 QUALIFICATIONS

A. Applicator: Company specializing in performing Work of this Section with minimum five (5) years' documented experience. Must include at least three (3) projects involving CCTV inspection for potable water pipelines.

PART 2 PRODUCTS

2.1 DVDS

A. Description: Digital video formatted discs.

B. Audio track containing simultaneously recorded narrative commentary and evaluations of videographer, describing in detail condition of pipeline interior.

PART 3 EXECUTION

3.1 EXAMINATION

A. Verify location of pipeline to be inspected.

3.2 PREPARATION

A. Flush and clean pipeline to remove biofilm, tuberculation, sediment and other materials to ensure clear view of interior conditions.

B. Intercept flushed debris; remove and dispose of debris off Site.

C. Thoroughly clean and disinfect CCTV camera and any other equipment prior to allowing passage into potable water pipeline.

3.3 APPLICATION

A. Closed-Circuit TV Camera System:

1. Use cameras specifically designed and constructed for closed-circuit sewer line inspection. Use camera equipment with pan and tilt capability to view each lateral connection at multiple angles.

2. Use camera capable of moving both upstream and downstream with minimum 1,000 feet (300 m) horizontal distance within one setup and direct-reading cable position meter.

3.4 FIELD QUALITY CONTROL

A. Pipeline Inspection:

1. Audio-video record sections of pipeline between exploratory cut-in location and bottom of slope under creek.

2. Identify and record locations of joints.

3. Locate and record flat grades, dips, deflected joints, open joints, broken pipe, protrusions into pipeline, and points of infiltration.

4. Record locations of pipeline defects.

END OF SECTION

SECTION 33 12 16

WATER UTILITY DISTRIBUTION & TRANSMISSION VALVES

PART 1 GENERAL

1.1 SUMMARY

A. This Section includes valves and valve boxes for installation with buried water distribution and transmission main, including fire hydrants and tapping sleeves.

B. Section Includes:

1. Valves.
2. Valve boxes.
3. Valve operator extensions.

C. Related Requirements:

1. Section 03 11 00 - Concrete Work.
2. Section 31 05 13 - Soils for Earthwork.
3. Section 31 05 16 - Aggregates for Earthwork.
4. Section 31 23 16 - Excavation.
5. Section 31 23 17 - Trenching.
6. Section 31 23 24 - Flowable Fill.
7. Section 33 92 10.30 – Steel Water Utility Transmission Piping
8. Section 33 13 00 - Testing and Disinfecting of Water Utility Distribution.

1.2 REFERENCE STANDARDS

A. American Society of Mechanical Engineers:

1. ASME B16.1 - Gray Iron Pipe Flanges and Flanged Fittings: Classes 25, 125, and 250.
2. ASME B16.5 - Pipe Flanges and Flanged Fittings, Steel Nickel Alloy and other Special Alloys.
3. ASME 1.20.1 - General Purpose Pipe Threads (Inch)

B. American Water Works Association:

1. AWWA C504 - Rubber-Seated Butterfly Valves, 3 In. Through 72 In.
2. AWWA C509 - Resilient-Seated Gate Valves for Water Supply Service.
3. AWWA C550 - Protecting Interior Coatings for Valves and Hydrants.
4. AWWA C600 - Installation of Ductile-Iron Mains and Their Appurtenances.
5. AWWA C605 - Underground Installation of Polyvinyl Chloride (PVC) and Molecularly Oriented Polyvinyl Chloride (PVCO) Pressure Pipe and Fittings.

C. ASTM International:

1. ASTM B62 - Standard Specification for Composition Bronze or Ounce Metal Castings.

2. ASTM B584 - Standard Specification for Copper Alloy Sand Castings for General Applications.

D. NSF International:

1. NSF 61 - Drinking Water System Components - Health Effects.
2. NSF 372 - Drinking Water System Components - Lead Content.

1.3 COORDINATION

A. The Contractor shall cause the Supplier of valves to coordinate installation such that all pipes, valves, fittings, appurtenances and equipment are compatible and capable of achieving the performance requirements specified in the Contract Documents.

1.4 SUBMITTALS

A. Section 01 33 00 - Submittal Procedures: Requirements for submittals.

B. Product Data: Submit manufacturer's latest published literature. Include illustrations, installation and maintenance instructions, and parts lists.

C. Manufacturer's Certificate: Certify that products meet or exceed specified requirements.

D. Manufacturer Instructions: Submit detailed instructions on installation requirements, including storage and handling procedures.

E. Lining and coating data.

F. Valve Labeling: Schedule of valves to be labeled indicating in each case the valve location and the proposed labeling for the valve.

G. Certification of Valves Larger than 12 inches: Furnish certified copies of hydrostatic factory tests, indicating compliance with applicable standards.

H. Source Quality-Control Submittals: Indicate results of factory tests and inspections.

I. Field Quality-Control Submittals: Indicate results of Contractor-furnished tests and inspections.

1.5 CLOSEOUT SUBMITTALS

A. Project Record Documents: Record actual locations of valves.

B. Operation and Maintenance Data: Submit information for valves.

1.6 QUALITY ASSURANCE

A. Cast manufacturer's name, maximum working pressure, size of valve and year of fabrication into valve body.

B. Valve Testing: Each valve body shall be tested under a test pressure equal to twice its design water-working pressure.

C. Certification: Prior to shipment, submit for all valves over 12 inches in diameter, certified, notarized copies of the hydrostatic factory tests, showing compliance with the applicable standards of AWWA, ANSI, ASTM, etc. Valves tested and supplied shall be trackable and traceable by serial number, tagged or otherwise noted on valve, upon arrival to Site.

D. Unless otherwise noted, all water works materials provided for the Project shall be new, of first class quality and shall be made by reputable manufacturers.

E. All material of a like kind shall be provided from a single manufacturer, unless otherwise approved by the Engineer.

1.7 DELIVERY, STORAGE, AND HANDLING

A. Prepare valves and accessories for shipment according to applicable AWWA standards.

B. Seal valve and ends to prevent entry of foreign matter.

C. Inspection: Accept materials on Site in manufacturer's original packaging and inspect for damage.

D. Storage:

1. Store materials in areas protected from weather, moisture, or other potential damage.

2. Do not store materials directly on ground.

E. Handle products carefully to prevent damage to interior or exterior surfaces.

F. All defective or damaged materials shall be replaced with new materials at no cost to the Owner.

PART 2 PRODUCTS

2.1 GENERAL

A. All materials in contact with potable water shall conform to ANSI/NSF Standard 61 and meet the "lead free" requirements of the Safe Drinking Water Act amendment, effective January 4, 2014, as per the lead content evaluation procedures outlined in NSF/ANSI Standard 372.1.

1. All fittings shall either be cast or permanently stamped with markings identifying the item as complying with NSF 61 per the requirements of NSF 372 for "lead free".

2. All brass in contact with potable water shall comply with ASTM B584.

2.2 RUBBER-SEATED BUTTERFLY VALVES

A. As specified in Section 40 05 23.18, Butterfly Valves.

B. Operation:

1. All buried valves shall be provided with 2-inch square operating nuts.

C. Connecting Hardware:

1. As specified in Article 2.3, Nuts, Bolts and Washers of Section 33 11 10.30, Steel Water Utility Transmission Piping.

D. Gaskets:

1. As required for the end connection types specified in Section 33 11 10.30, Steel Water Utility Transmission Piping.

2.3 ACTUATORS

A. Unless otherwise indicated, all valves shall be furnished with manual actuators.

B. Actuators shall be sized for the valve design pressure in accordance with AWWA C504.

C. All gear-assisted valves that are buried and submerged shall have the actuators hermetically-sealed and grease-packed.

D. All valves 6 inches to 30 inches in diameter may have traveling-nut actuators, worm-gear actuators, spur- or bevel-gear actuators, as appropriate for each valve.

2.4 VALVE BOXES

A. Provide all buried valves with valve boxes, covers and risers.

B. Valve Boxes:

1. Materials: Cast iron.

2. Construction:

a. Walls not less than 3/16-inch thick at any point.
b. Internal diameter not less than 5 inches.

3. Type: Two-piece extension.

4. Manufacturers: as shown on details in the Drawings.

C. Covers:

1. Construction:

a. Prevents dislodging and rotation from traffic.
b. Allows a hand held pry bar to be applied for easy removal.

2. Materials: Cast iron.

3. Lid Inscription: W.

4. Manufacturers: Matching that of valve box.

D. Riser:

1. PVC Pipe:

a. ASTM D3034, SDR 35 PVC.
b. White, Schedule 40, 8-inch diameter.
c. Length as shown on details in the Drawings.

2.5 VALVE OPERATOR EXTENSIONS

A. As shown in the Drawings.

B. Provide operator extensions to a maximum of 12 inches below grade where depth to valve exceeds 36 inches.

2.6 ACCESSORIES

A. Concrete for Thrust Restraints: Concrete type as specified in Section 03 30 00 - Cast-in-Place Concrete.

PART 3 EXECUTION

3.1 PREPARATION

A. Conduct operations to not interfere with, interrupt, damage, destroy, or endanger integrity of surface or subsurface structures, utilities, and landscape in immediate or adjacent areas.

B. Identify required lines, levels, contours, and datum locations.

C. Locate, identify, and protect from damage utilities to remain.

D. Access:

1. All valves shall be installed to provide easy access for operation, removal, and maintenance.

2. Avoid conflicts between valve operators and above grade construction such as structural members or handrails.

E. Valve Accessories:

1. Where combinations of valves, sensors, switches, and controls are specified, it shall be the responsibility of the Contractor to properly assemble and install these various items so that all systems are compatible and operating properly.

2. The relationship between interrelated items shall be clearly noted on shop drawing submittals.

3.2 INSTALLATION

A. General:

1. All valves, operating units, stem extensions, valve boxes, and accessories shall be installed in accordance with the manufacturer's written instructions and as shown in the Drawings and as specified herein.

2. Valves shall be firmly supported to avoid undue stresses on the pipe.

3. Stem extensions shall be braced at no greater than 10 feet intervals and be provided with double universal joints to allow for misalignment, where applicable.

B. Perform trench excavation, backfilling, and compaction as specified in Section 33 11 10.30, Steel Water Utility Transmission Piping.

C. Install valves in conjunction with pipe laying.

D. Set valves plumb.

E. Provide buried valves with valve boxes installed flush with finished grade.

1. Valves installed out of paved or otherwise hard-surfaced areas shall be set in a concrete pad at finished grade.

2. Concrete valve box pads shall be 18 inches square and be not less than 6 inches thick.

F. Disinfection of Water Piping System:

1. Flush and disinfect system as specified in Section 33 13 00, Testing and Disinfecting of Water Utility Distribution.

3.3 FIELD QUALITY CONTROL

A. Pressure test valving for water distribution system according to AWWA C600 and in accordance with Section 33 13 00, Testing and Disinfecting of Water Utility Distribution.

B. Field Testing of Valves:

1. All valves 24-inch diameter or larger, and all in-line transmission main valves, shall be pressure and leakage tested at the Site and shall pass the field testing prior to installation.

2. Valves shall be tested at 1.5 times normal operating pressure, 150 psi minimum.

3. No valve shall be accepted for installation that fails to pass the field pressure test. Any valves failing field pressure tests shall be replaced by the Contractor at no additional cost to the Owner.

4. Engineer shall witness field testing.

END OF SECTION

SECTION 33 13 00

TESTING & DISINFECTING OF WATER UTILITY PIPING

PART 1 GENERAL

1.1 SUMMARY

A. This Section includes hydrostatic pressure testing, disinfection and purity testing of potable water systems piping, fittings, valves, and domestic water services.

24-inch steel pipeline shall be hydrostatically tested on two separate occasions during construction process as described herein and in Section 01 12 16, Work Sequence.

B. Section Includes:

1. Pressure testing and disinfection of potable water distribution and transmission piping systems and appurtenances.

2. Testing and reporting of results.

C. Related Requirements:

1. Section 01 12 16 – Work Sequence
2. Section 33 12 16 - Water Utility Distribution and Transmission Valves.
3. Section 33 92 10.30 – Steel Water Utility Transmission Piping.

1.2 REFERENCE STANDARDS

A. American Water Works Association:

1. AWWA B300 - Hypochlorites.
2. AWWA B301 - Liquid Chlorine.
3. AWWA C604 - Installation of Buried Steel Waterline, 4 In and Larger.
4. AWWA C651 - Disinfecting Water Mains.
5. AWWA C655 - Field Dechlorination.

1.3 SUBMITTALS

A. Section 01 33 00 – Contractor Submittals: Requirements for submittals.

B. Product Data: Submit procedures, proposed chemicals, and treatment levels.

C. Manufacturer's Certificate: Certify that products meet or exceed specified requirements.

D. Pipeline Testing & Disinfection Plan: To be submitted for review and approval by the Engineer a minimum of one month before testing is to start. As a minimum, the plan shall include the following:

1. Testing schedule.

2. Hydrostatic Testing Plans:

   a. Narrative of the proposed process.
   b. Proposed equipment to be used.
   c. Disposal location for excess water used to fill mains.

3. Disinfection Plan:

   a. Narrative of the proposed process.

   b. Proposed chemicals and equipment (including list of all pumps and meters) to be used.

   c. Calculations for the amount of chlorine required to achieve required chlorine residual levels.

   d. Proposed method of mixing, injecting and distributing of chlorine solution throughout all portions of the new water system facilities.

   e. Proposed plan for testing chlorine levels throughout the length of pipeline.

4. Proposed testing locations.

5. Proposed plan for water conveyance, including flow rates.

6. Proposed plan for water control.

7. Proposed plan for water disposal, including flow rates. Include proposed plan for dechlorination of disinfection water, including discharge points.

8. Proposed measures to be incorporated in the project to minimize erosion while discharging water from the pipeline.

1.4 CLOSEOUT SUBMITTALS

A. Disinfection Report:

1. Type and form of disinfectant used.

2. Date and time of disinfectant injection start and time of completion.

3. Test locations.

4. Name of person collecting samples.

5. Initial and 24-hour disinfectant residuals in treated water in ppm for each outlet tested.

6. Date and time of flushing start and completion.

7. Disinfectant residual after flushing in ppm for each outlet tested.

1.5 QUALITY ASSURANCE

A. Perform Work according to AWWA C651.

PART 2 PRODUCTS

2.1 EQUIPMENT

A. All test equipment, chemicals for chlorination, temporary valves, bulkheads, or other water control equipment and materials shall be determined and furnished by the Contractor subject to the Engineer's review. No materials shall be used which would be injurious to the construction or its future functions.

B. All temporary thrust restraint and equipment and facilities required for hydrostatic testing will be considered incidental.

C. As a minimum, furnish the following equipment and materials for the testing:

Amount	Description
2	Graduated containers approved by the Engineer.
1	Hydraulic pump approved by the Engineer with hoses, valves and fittings as needed and required for the testing and disinfection of the facilities.
1	High range chlorine test kit, as approved by Engineer, with digital readout. Range of detection shall be between 5 & 200 ppm. Accuracy of 3%.
2	Pressure gauges with pressure range at least 120% greater than the required maximum test pressure with graduations in two (2) psi increments. Gauges shall have been calibrated with 90 days of pressure testing.

2.2 DISINFECTION CHEMICALS

A. Chemicals:

1. Hypochlorite: Comply with AWWA B300.
2. Liquid chlorine: Comply with AWWA B301.

2.3 DECHLORINATION CHEMICALS

A. Chemicals:

1. Comply with AWWA C655.

PART 3 EXECUTION

3.1 HYDROSTATIC TESTING OF WATER PIPING

A. Make all necessary provisions for conveying water to the points of use and for the disposal of test water.

B. Provide 72-hour notification to the Engineer and Owner prior to conducting hydrostatic testing.

1. Provide coordination and scheduling required for the Owner and Engineer to witness and provide necessary labor for operating Owner's existing system during hydrostatic testing and disinfecting procedures.

2. The Contractor shall not operate any part of the existing water systems.

C. Pipe Filling:

1. Fill pipes slowly from the lowest elevation to highest point along test section with potable water.

2. Take all required precautions to prevent entrapping air in the pipes.

3. Allow for natural absorption of water by the lining of the pipe to occur.

4. Apply specified test pressure by pumping.

D. Testing of Mains:

1. Steel: In accordance with AWWA C604 and as specified herein.

2. General:

a. Tests shall be conducted under a hydrostatic test pressure of 205 psi as measured from the downstream cut-in valve location within Clackamas County's yard. Hydrostatic pressure testing shall be conducted on two different occasions during the construction process as follows:

1) Cut-In Valve Reconnections and Baseline Leakage Determination - The first round of hydrostatic testing shall occur after cut-in valve reconnections have been completed and shall include a visual inspection of all exposed installed cut-in joints under pressure, as well as a 2-hour baseline leakage test for existing transmission pipeline section located between the installed cut-in valves per the general testing procedure specified herein.

2) Post-Joint Restraint Installations - The second and final round of hydrostatic testing shall occur after all joint restraints have been installed and welds onto existing pipeline for reinforced concrete anchor block (if anchor block work is directed by Owner) have been completed. Test shall last for 2-hours and shall include transmission pipeline section between the installed cut-in valves. Measured leakage for 2-hour period shall be less than or equal to previously measured baseline leakage determined during first round of hydrostatic testing. If the Contractor was not able to adequately maintain pressure in the pipeline for baseline leakage test due to excessive leakage in existing pipeline joints prior to restraint installations, all excavations for restraining existing pipe joints shall be left open for Contractor and Owner's Representative to visually inspect exposed joints under hydrostatic test pressure.

b. In no case shall the test pressure exceed the rated working pressure for any joint, thrust restraint, valve, fitting, or other connected appurtenance of the test section.

c. Testing shall be performed by applying the specified test pressure by pumping.

d. Once the test pressure has been attained, the pump shall be valved off.

e. The test will be conducted for a two-hour period as specified herein. Pressure in pipeline shall be maintained within 5 psi of specified test pressure by additional pumping as required during test period.

f. During the test period, there shall be no appreciable or abrupt loss in pressure.

3. Defects, Leakage, Failure:

a. If the visual inspection reveals any defects, leakage, or failure, furnish all labor, equipment and materials required to locate and make necessary repairs.

b. All leaks shall be repaired in a manner acceptable to the Engineer.

c. The testing of the line shall be repeated until a test satisfactory to the Engineer has been achieved.

3.2 DISINFECTION OF WATER PIPING

A. Disinfection shall be in accordance with the latest version of AWWA C651 and shall be performed following Engineer's acceptance of hydrostatic testing.

B. Chlorination by means of tablets or powders (calcium hypochlorite) placed in each length of pipe during installation is specifically prohibited.

C. Flush all foreign matter from the pipeline, branches and services.

1. Provide at no additional cost to the Owner, hoses, temporary pipes, ditches, etc., as required to dispose of flushing water without damage to adjacent properties.

2. Flushing velocities shall be at least 2.5 feet per second (fps).

3. For large diameter pipe where it is impractical or impossible to flush the pipe at 2.5 fps velocity, clean the pipe in place from the inside by brushing and sweeping, then flush the line at a lower velocity.

D. Chlorine Application:

1. Fill the test section of main from the lowest elevation and maintain a steady flow rate while injecting the water main with chlorinated water.

2. Flow (bleed) a blow-off, standpipe or hydrant at the water main's high point(s) to allow air to escape and ensure all interior pipe surfaces are wetted.

E. Chlorine Residual:

1. Measure chlorine residual with a high-range chlorine test kit at a point near to the injection point while filling the main.

2. Adjust the dose rate as necessary to maintain the target dose rate.

F. Potable water piping shall be disinfected with a solution containing a minimum 25 parts per million (ppm) and a maximum 50 ppm chlorine.

1. Once the main is completely filled with super-chlorinated water, measure the chlorine residual a minimum of once every 200 feet of main and once for each main branch, 2-inch service or as directed by the Engineer.

2. The chlorine solution shall remain in the piping system for a period of 24 hours, after which time the sterilizing mixture shall have a strength of at least 10 ppm of chlorine.

3. If check samples fail to produce acceptable results, the disinfection procedure shall be repeated at the expense of the Contractor until satisfactory results are obtained.

G. Flush piping, branches and services with municipal potable water until the chlorine residual is below 1.5 ppm and approximately the same as the source water.

1. There is no minimum flushing velocity for this step.

H. Disposal of any water containing chlorine shall be performed in accordance with the latest edition of AWWA C651 and C655, and all state or local requirements.

1. Disposal may be made into existing sanitary sewer systems providing approvals are obtained from the respective system owners.

2. Any chlorinated water discharged to open stream channels must be dechlorinated prior to discharge to levels acceptable by Oregon State Department of Environmental Quality (DEQ).

3.3 DISINFECTION & TESTING OF WATER MAIN END CONNECTIONS AND TIE-INS

A. Disinfection of potable water piping and appurtenances at end connections and tie-ins to the existing system which are required to remain in service due to restrictions in allowable shutdown time shall be disinfected as described below.

B. Prior to connecting new potable water piping and appurtenances with existing piping and appurtenances, the interior of all new pipe, fittings, valves and appurtenances shall be swabbed or sprayed with a 1% to 5% percent calcium hypochlorite solution.

C. In accordance with AWWA C651, swabbing or spraying of connection piping is allowed only if the total length of piping is equal to or less than one pipe length (18 feet). All runs of new piping over 18 feet in total length will require hydrostatic pressure testing, flushing and disinfection as detailed elsewhere in this Section.

D. Following the disinfection procedures described above, connection of the new piping and appurtenances to the existing water system shall be made.

1. During the system startup, the Engineer and Contractor shall visually inspect all new fittings, piping, valves and appurtenances for evidence of leakage.

2. Any leakage observed during this period shall be promptly repaired by the Contractor, at Contractor's expense, as required by the Engineer.

3.4 FIELD QUALITY CONTROL

A. Bacteriological Sampling and Testing:

1. The Owner will collect samples after the line is flushed in accordance with the latest edition of AWWA C651.

a. The locations for sample collection shall be at the sole discretion of the Owner and Engineer.

b. The chlorine residual must be below 1.5 ppm, or restored to the level maintained in the Owner's distribution system, when the sample is taken.

2. Bacterial Testing: After completing the chlorination procedure, test the main according to the following:

a. Bacterial Sampling

1) Option A:

a) Take an initial set of samples using sampling site procedures outlined herein.

b) Resample after a minimum of 24 hours' time has elapsed using sampling site procedures outlined herein.

c) Both sets of successive samples must pass for the main to be approved for service.

2) Option B:

a) Allow main to sit for a minimum of 24 hours without any water use.

b) Using sampling site procedures outlined herein, collect two sets of samples a minimum of 15 minutes apart while the sampling taps are left running.

c) Both sets of samples must pass for the main to be approved for service.

3) Allow 24 hours for the test results for each sample set.

b. Sampling Locations

1) The Owner will take one bacteriological sample from the end of the main and on each branch.

2) For long runs of main, at least one sample will be taken for every 1,200 feet of new main and as directed.

c. Sample Testing

1) The Owner will test the sample set for coliform bacteria and publish the test results within 24 hours.

d. Evaluating the Test Results

1) If one or more of the sample set tests positive for coliforms (fails), repeat chlorination and sampling processes specified herein after correcting the cause of the failure and as directed by the Engineer.

2) When two consecutive sample sets test negative (passing)for coliform bacteria, the bacterial testing is complete.

e. Completion of Bacterial Testing

1) Upon completion of bacterial testing, notify the Owner shall notify the Engineer and Contractor in writing that the testing is complete and the main is ready for tie-in.

f. Multiple Positive (Failing) Test Results

1) If sample sets continue to test positive for coliforms, the Engineer will determine how to proceed, up to and including repeating the chlorination procedure or rejecting the pipe.

3. Results of the bacteriological testing shall be satisfactory with the Oregon Health Authority and/or other appropriate regulatory agencies, or disinfection shall be repeated by the Contractor.

B. Optional Sampling and Testing

1. If a pipeline is not promptly returned to service, the situation will be evaluated by the Owner to determine if the water quality may have been impacted and if additional testing as specified herein is warranted.

END OF SECTION

SECTION 33 92 10.30

STEEL WATER UTILITY TRANSMISSION PIPING

PART 1 GENERAL

1.1 GENERAL

A. All buried steel pipe and fittings shall be mortar-lined and mortar coated. All buried steel specials shall be mortar-lined and mortar coated unless otherwise shown or specified. All buried steel piping field welded joints shall be mortar lined and grout coated with grout bands, where required.

B. All linings and coatings shall be as specified herein.

1.2 REFERENCE SPECIFICATIONS, CODES AND STANDARDS

A. Commercial Standards:

ANSI/ASTM A 139	Specification for Electric-Fusion (Arc)-Welded Steel Pipe (Sizes 4-in and Over)
AWWA C 105	Polyethylene Encasement for Ductile Iron Piping for Water and Other Liquids
ANSI/AWWA C 200	Steel Water Pipe 6-Inches and Larger
ANSI/AWWA C 205	Cement-Mortar Protective Lining and Coating for Steel Water Pipe – 4 Inches and Larger – Shop Applied
ANSI/AWWA C 206	Field Welding of Steel Water Pipe
ANSI/AWWA C207	Steel Pipe Flanges for Waterworks Service, Sizes 4 In. Through 144 In.
ANSI/AWWA C 208	Dimensions for Fabricated Steel Water Pipe Fittings
ANSI/AWWA C210	Liquid-Epoxy Coatings and Linings for Steel Water Pipe and Fittings
ANSI/AWWA C213	Fusion-Bonded Epoxy Coatings and Linings for Steel Water Pipe and Fittings
ANSI/AWWA C 602	Cement-Mortar Lining of Water Pipelines – 4 Inches (100 mm) and Larger – In Place

ANSI/AWWA 604	Installation of Buried Steel Water Pipe – 4 In. and Larger
ASTM A 36	Specification for Structural Steel
ASTM A 1018	Specification for Hot-Rolled Carbon Steel Sheet and Strip, Structural Quality
ASTM C 150	Specification for Portland Cement
AWWA M-11	Steel Water Pipe – A Guide for Design and Installation

1.3 RELATED SECTIONS

A. Section 03 11 00 - Concrete Work.
B. Section 31 05 13 - Soils for Earthwork.
C. Section 31 05 16 - Aggregates for Earthwork.
D. Section 31 23 16 - Excavation.
E. Section 31 23 17 - Trenching.
F. Section 31 23 24 - Flowable Fill.
G. Section 33 12 16 - Water Utility Distribution and Transmission Valves.
H. Section 33 13 00 - Testing and Disinfection of Water Utility Piping.

1.4 SUBMITTALS

A. Shop Drawings: Submit shop drawings of pipe and fittings in accordance with contract documents and the requirements of ANSI/AWWA C200 and C205, and the following supplemental requirements as applicable. All shop drawings and construction details shall be certified by fabricator.

1. Certified dimensional drawings of all valves, fittings and appurtenances.

2. Joint and pipe/fitting wall construction details which indicate the type and thickness of cylinder; manufacturing tolerances; and all other pertinent information required for the manufacture of the product.

3. Fittings and specials details such as elbows, wyes, tees, outlets, connections, test bulkheads and nozzles or other specials where shown on the Drawings which indicate amount and position of all reinforcement. All fittings and specials shall be properly reinforced to withstand the internal pressure, both circumferential and longitudinal, and the external loading conditions as indicated in the Contract Documents.

4. Material lists which include and describe all materials to be utilized.

5. Line layout and marking diagrams which indicate the specific number of each pipe and fitting and the location of each pipe and the direction of each fitting in the

completed line. In addition, the line layouts shall include: the pipe station and invert elevation at all changes in grade or horizontal alignment; the station and invert elevation to which the bell end of each pipe will be laid; all elements of curves and bends, both in horizontal and vertical alignment; and the limits of each reach of restraint and/or welded joints, or of concrete encasement.

6. Full and complete information regarding location, type, size and extent of all welds shall be shown on the shop drawings. The shop drawings shall distinguish between shop and field welds. Shop drawings shall indicate, by welding symbols or sketches, the details of the welded joints and the preparation of parent metal required to make them. Joints or groups of joints in which welding sequence or technique are especially important shall be carefully controlled to minimize shrinkage stresses and distortion.

7. Pipe manufacturer's recommendations for handling and long term storage of pipe and pipe materials.

8. Lining and Coating data.

9. Submit welder certification as required by 1.5 Quality Assurance, paragraph H.

10. Submit as a package on all flange-to-flange connections including bolts, nuts gaskets, and recommended bolt torque.

11. As-built flange bolt torque information

12. Testing certifications for gaskets.

13. The Contractor shall hire an independent testing agency, approved by the Engineer, to inspect and provide non-destructive magnetic particle testing for field welds. Contractor shall submit the testing agency certifications and a testing plan for review by the Engineer.

B. Certifications: The Supplier shall furnish a certified affidavit of compliance for all pipe and other products or materials furnished under this Section of the Specifications, as specified in ANSI/AWWA C200 and C205, and the following supplemental requirements:

1. Physical and chemical properties of all steel

2. Results of production weld tests

3. Sand, cement and mortar tests

4. All materials are NSF approved for use with potable water

C. All expenses incurred in making samples for certification of tests shall be borne by the Supplier.

D. The Contractor shall submit as part of the shop drawings a statement from the pipe fabricator certifying that all pipes will be fabricated subject to a recognized Quality Control Program. An outline of the program shall be submitted to the Owner's Representative for review prior to the fabrication of any pipe.

1.5 QUALITY ASSURANCE

A. The pipe manufacturer shall be certified by the Steel Plate Fabricator's Association (SPFA) or ISO 9001 and shall be experienced in fabrication of AWWA C200 pipe of similar diameter, lengths and wall thickness to this work.

B. The pipe manufacturer's experience shall include successful fabrication to AWWA C200 specifications of at least 3,000 feet of 24-inch diameter or larger pipe of which a minimum of 1,500 feet of 30-inch diameter pipe or larger with the specified wall thickness for this project or greater, within the last 5-year period. Experience shall be applicable to fabrication plant facilities and personnel.

C. The fabrication of steel piping and fittings shall be conducted within the same fabrication facility, including, but not limited to welding, lining, coating and testing.

D. Inspection: All pipe shall be subject to inspection at the place of manufacture in accordance with the provisions of ANSI/AWWA C200 and C205, as supplemented by the requirements herein. The Supplier shall notify the Owner's Representative in writing of the manufacturing starting date not less than 14 calendar days prior to the start of any phase of the pipe manufacture.

E. Tests: All materials used in the manufacture of the pipe shall be tested in accordance with the requirements of ANSI/AWWA C200.

F. Welding Requirements: All welding procedures used to fabricate pipe shall be qualified under the provisions of ANSI/AWS D1.1 Welding procedures shall be required for, but not necessarily limited to, longitudinal and girth or spiral welds for pipe cylinders, spigot and bell ring attachments, reinforcing plates and ring flange welds, and plates for lug connections.

G. Welder Qualifications: All welding shall be done by skilled welders, welding operators, and tackers who have had adequate experience in the methods and materials used. Welders shall be qualified under the provisions of ANSI/AWS D1.1 by an independent local, approved testing agency. Machines and electrodes similar to those used in the Work shall be used in qualification tests. All welders shall be certified within six months of commencing work and shall be certified for the welding procedures specified for the field welded joints.

H. Handling and long-term storage of pipe materials shall be per pipe manufacturer's requirements.

I. The piping shown in Drawings is intended to define the general layout, configuration, routing, pipe size, and pipe material and joint type. The piping drawings are not pipe construction or fabrication drawings. The Contractor shall cause the Supplier of pipes, valves, fittings and appurtenances to coordinate piping installation such that all equipment is compatible, is capable of achieving the performance requirements specified in the Contract Documents and meets the minimum clearances and other dimensional requirements shown on the Drawings and as specified. It is the Contractor's responsibility to develop the details necessary to construct all mechanical piping systems, to accommodate the specific equipment provided, and to provide and install all spools, spacers, adapters, connectors, valves, gaskets, fittings, appurtenances etc., for a complete and functional system.

PART 2 PRODUCTS

2.1 GENERAL

A. Steel pipe and mortar lining and coating shall conform to ANSI/AWWA C200 and C205, subject to the following supplemental requirements. The pipe shall be ASTM 1018 GR 36 Steel, or as otherwise specified herein, and furnished complete with all specials and bends provided as required under the Contract Documents. Pipe wall thickness shall be 1/4 –inch minimum for nominal pipe diameters 30-inches and smaller.

B. Markings: The Supplier shall legibly mark all pipes and specials in accordance with the laying schedule and marking diagram. Each pipe shall be numbered in sequence and said number shall appear on the laying schedule and marking diagram in its proper location for installation. All special pipe sections and fittings shall be marked at each end with top field centerline. The word "top" shall be painted or marked on the outside top spigot end of each pipe section. Identification must also be placed on caps on each end of each section of pipe.

C. Handling and Storage: The pipe shall be handled as a minimum at 10 foot intervals by use of wide slings, padded cradles, or other devices, acceptable to the Owner's Representative, designed and constructed to prevent damage to the pipe coating/exterior and interior lining. The use of chains, hooks or other equipment which might injure the pipe coating/exterior will not be permitted.

D. The Supplier shall be fully liable for the cost replacement or repair of pipe which is damaged prior to delivery to the Contractor.

E. Stockpiled pipe shall be supported on sand or earth berm free of rock exceeding 3 inches in diameter. The pipe shall not be rolled and shall be secured to prevent accidental rolling.

F. Strutting: Adequate strutting shall be provided on all specials, fittings and straight pipe so as to avoid damage to the pipe and fittings during handling, storage, hauling and installation. For mortar-lined steel pipe, the following requirements shall apply:

1. The strutting shall be placed as soon as practicable after the mortar lining has been applied and shall remain in place while the pipe is loaded, transported, unloaded, installed and backfilled at the job site.

2. The strutting materials, size and spacing shall be as shown to support the earth backfill plus any greater loads which may be imposed by the backfilling and compaction equipment.

3. Any pipe damaged during handling, hauling, storage or installation due to improper strutting shall be repaired or replaced.

4. The details of the strutting assembly shall be submitted for review by the Owner's Representative prior to the start of pipe manufacture.

G. Lay Lengths: Maximum pipe laying lengths shall be 40 feet with shorter lengths provided as required.

H. Offset Tolerances: For pipe wall thickness of 3/8-inch or less, the maximum radial offset (misalignment) for submerged arc and gas metal arc welded pipe shall be 0.1875 times the pipe wall thickness or 1/16-inch, whichever is larger. For pipe wall thickness of greater than 3/8-inch, the maximum radial offset shall be 0.1875 times the wall thickness or 5/32-inch, whichever is smaller.

I. Finish: The pipe shall have smooth dense interior surfaces and shall be free from fractures, excessive interior surface crazing and roughness.

J. Closures and Correction Pieces: Closures and correction pieces shall be provided as required so that closures may be made due to different headings in the pipe laying operations and so that correction may be made to adjust the pipe laying to conform to pipe stationing shown.

2.2 PIPE DESIGN CRITERIA

A. Cylinder Thickness for Internal Pressure: For resistance to internal pressure, the thickness of the steel cylinder shall be the greater of that determined by the following 2 formulas:

(1) $\underline{P_w D/2}$ (2) $\underline{P_t D/2}$

$T = Y/S_w$ $\qquad$ $T = Y/S_t$

Where:

T = Steel Cylinder thickness in inches
D = Outside diameter of steel cylinder in inches
Pw= Design working pressure in psi
Pt = Design transient pressure in psi
Y = Specified minimum yield point of steel in psi
Sw = Safety factor of 2.0 at design working pressure
St = Safety factor of 1.3 at design transient pressure

B. In no case shall the steel shell thickness be less than 1/4-inch.

C. Cylinder Thickness for External Load: Upon determination of cylinder thickness, deflection of the pipe shall be checked by the following formula:

$$Defl_x = \frac{DKWr^3}{EI + 0.0614\ E'r^3}$$

Where:

$Defl_x$ = Vertical deflection of pipe in inches, not to exceed 0.020 times the nominal diameter
D= Deflection lag factor = 1.25
K= Bedding constant = 0.1
(1)W= Vertical load on pipe, lb/in
r= Mean radius of pipe shell, inches
(2)EI= Pipe wall stiffness, lb/in
E'= Modulus of soil reaction, lb/in^2 (1500psi)

Note (1): Vertical load on pipe, "W", shall be the sum of the earth load plus HS-20 liveload plus impact load.

Note (2): Based on the sum of the pipe wall stiffness, EI, mortar lining, mortar coating and steel cylinder assuming that it acts as a three-part laminar ring which considers no bond between the steel cylinder and the applied lining. The term "pipe wall stiffness" as used herein is defined as EI, where "E" is the modulus of elasticity (E=30,000,000 psi for steel and E=4,000,000 psi for mortar) and "I" is the transverse moment of inertia per unit length of pipe wall, the factors in the foregoing expression to be dimensionally compatible.

D. If the calculated deflection, $Defl_x$, exceeds the maximum amount specified, the composite pipe section shall be thickened, or the quality of pipe zone backfill shall be improved to achieve a higher soil modulus (e.g., lean concrete).

2.3 MATERIALS

A. Cement: Cement for mortar shall conform to the requirements of ANSI/AWWA C205. Cement for mortar lining shall be Type II. A fly ash or pozzolan shall not be used as a cement replacement. Add mixtures shall not contain calcium chloride.

B. Steel for Cylinders and Fittings: Pipe manufactured under ANSI/AWWA C200 shall be fabricated from sheet or coil conforming to the requirements of ASTM A 1018, Grade 36 or 40, or from plate conforming to the requirements of ASTM A 36, A 283, Grades C or D, or A 572, Grade 42, or coil conforming to the requirements of ASTM A 139, Grades B or C. All longitudinal and girth seams, whether straight or spiral, shall be butt welded using an approved electric-fusion-weld process.

C. Steel for Cylinder and Fittings - Pipe manufactured under ANSI/AWWA C200 shall satisfy the following requirements:

1. Minimum yield strength of steel is 36 ksi.
2. Be manufactured by a continuous casting process
3. Be fully killed
4. Be fine grain practice
5. Have maximum carbon content of 0.25 percent
6. Have maximum sulfur content of 0.04 percent
7. Have minimum elongation of 22 percent in a 2-inch gauge length.

D. Cement-Mortar Protective Lining and Coating - The steel pipe shall be lined and coated (exterior) with cement-mortar in accordance with AWWA C205. The mortar lining and coating shall be held back a minimum of 7-inches from each end of pipe to allow for welded connections. Clean and prepare surface per cement manufacturer's recommendations. Repairs to lining and field joints shall be repaired in kind per AWWA C205.

2.4 SPECIALS AND FITTINGS

All specials and fittings shall be in accordance with Section 33 92 10.31, Fabricated Specials – Steel Pipe, and shall conform to the dimensions of ANSI/AWWA C208.

2.5 DESIGN OF PIPE

A. General: The pipe furnished shall be steel pipe with field welded joints as shown. Buried pipe shall consist of a steel cylinder shop-lined with Portland cement-mortar with an exterior coating of mortar.

B. The pipe shall be designed, manufactured, tested, inspected and marked according to applicable requirements previously stated and except as hereinafter modified, shall conform to ANSI/AWWA C200.

C. Pipe Dimensions: The pipe shall be of the diameter shown. The minimum steel cylinder thickness for each pipe size shall be as specified or shown.

D. Fitting Dimensions: The fittings shall be of the diameter and class shown or required for the pressures specified.

E. Joint Design: Unless otherwise indicated, the standard field joint for steel pipe shall be a double fillet welded lap joint. Mechanically coupled, or flanged joints shall be required where shown. Butt strap joints shall be used only where required for closures or where shown. The joints furnished shall have the same or higher pressure rating as the abutting pipe. Each joint shall have a threaded tap suitable for air testing between the two welds. Once the joint has been successfully tested, the tap shall be plug welded. Buttstrap joints shall be welded inside and outside the two taps (4 total air taps for two-piece buttstrap) for air testing. Where air testing of a field weld is not possible, the weld shall be visually inspected and magnetic particle tested by an independent weld inspector approved by the Engineer.

F. Lap joints prepared for field welding shall be in accordance with ANSI/AWWA C200 and C206. The method used to form, shape and size bell ends shall be such that the physical properties of the steel are not substantially altered. Unless otherwise approved by the Owner's Representative, bell ends shall be formed by an expanding press or by being moved axially over a die in such a manner as to stretch the steel plate beyond its elastic limit to form a truly round bell of suitable diameter and shape. No process will be permitted in which the bell is formed by rolling. Faying surfaces of the bell and spigot shall be essentially parallel, but in no case shall the bell slope vary more than 2 degrees from the longitudinal axis of the pipe.

G. Shop-applied interior linings and exterior coatings shall be held back from the ends of the pipe as shown or as otherwise acceptable to the Owner's Representative.

2.6 CEMENT-MORTAR LINING

A. Cement-Mortar Lining for Shop Application: Except as otherwise specified herein, interior surfaces of all steel pipe, fittings and specials shall be cleaned and lined in the shop with cement- mortar lining applied centrifugally in conformity with ANSI/AWWA C205. During the lining operation and thereafter, the pipe shall be maintained in a round condition by suitable bracing or strutting. The lining machines shall be approved by the Owner's Representative. Steel pipe mortar lining shall be inspected and checked with mill thickness gauge. If lining is damaged or found faulty at delivery site, the damaged or unsatisfactory portions shall be replaced with lining conforming to these Specifications at no additional cost to the Owner.

B. The minimum cement mortar lining thickness shall be as specified in ANSI/AWWA C205.

C. The pipe shall be left bare where field joints occur as shown. Ends of the linings shall be left square and uniform. Feathered or uneven edges will not be permitted.

D. Defective linings, as determined by the Owner's Representative, shall be removed from the pipe wall and shall be replaced to the full thickness required. Defective linings shall be cut back to a square shoulder in order to avoid feather edged joints.

E. The progress of the application of mortar lining shall be regulated in order that all hand work, including the repair of defective areas is cured in accordance with the provisions of ANSI/AWWA C205. Cement-mortar for patching shall be the same materials as the mortar for machine lining, except that a finer grading of sand and mortar richer in cement shall be used when field inspection indicated that such mix will improve the finished lining of the pipe.

F. Cement-Mortar Lining for Field Application: The materials and design of in place cement-mortar lining shall be in accordance with ANSI/AWWA C602 and the following supplementary requirements:

1. Portland cement shall conform to Type II of ASTM C 150

2. Pozzolanic material shall not be used in the mortar mix

3. Admixtures shall contain no calcium chloride

4. The minimum lining thickness shall be as specified for shop-applied cement mortar lining and finished inside diameter after lining shall be as shown.

5. Wire fabric or ribbon mesh reinforcement shall be used for field applied lining repairs 12-inch and larger in longitudinal width, per AWWA C205.

G. Protection of Pipe Lining/Interior: For all pipe and fittings with plant-applied concrete or cement mortar linings, the Supplier shall provide a polyethylene or other suitable bulkhead on the ends of the pipe and on all special openings to prevent drying out of the lining. All bulkheads shall be substantial enough to remain intact during shipping and storage until the pipe is installed.

H. Epoxy Lining: Where specified, provide NSF-61 approved epoxy lining systems per Section 33 92 10.31, Fabricated Specials – Steel Pipe.

2.7 EXTERIOR COATING OF PIPE

A. Exterior Coating of Exposed Piping and Specials: The exterior surfaces of pipe and specials which will be exposed at the atmosphere inside vaults shall be mortar and epoxy coated as required for buried pipe, unless otherwise specified.

B. Exterior Coating of Buried Piping: All pipe for buried service shall be coated with a minimum 3/4-inch thick cement-mortar coating and shall conform to the requirements of ANSI/AWWA C205, latest edition. Unless otherwise shown on the Plans, exterior surfaces of pipe or fittings passing through structure walls shall be cement-mortar coated from the center of the wall or from the wall flange to the end of the underground portion of pipe or fitting.

C. Polyethylene Sleeve: All blow off and air release piping shall be encased with two (2) layers of 6 mil polyethylene, unless otherwise specified or shown. Material for the polyethylene sleeve shall conform to the requirements of ANSI/AWWA C105.

D. Epoxy Coating: Where specified, provide epoxy coating systems per Section 33 92 10.31, Fabricated Specials – Steel Pipe.

2.8 PIPE APPURTENANCES

A. Dismantling Joint shall be as specified on the Plans.

2.9 FLANGES

A. Unless otherwise specified or shown on the Plans, all steel flanges for discharge main piping shall conform to ANSI B16.5 300-lb Class for piping 24-inches and smaller and ANSI B16.47 300-lb Class for piping larger than 24-inches. Furnish AWWA C207 Class F for all suction main steel flanges, unless otherwise specified or shown on the Plans. Provide bolt torque sequencing per AWWA C604.

B. Provide ANSI B16.1 Class 250 drilling for all steel flanges unless otherwise specified or shown.

C. Flanges shall have flat faces and shall be attached with bolt holes straddling the vertical axis of the pipe unless otherwise shown. Contractor shall coordinate with pipe, valve and fitting suppliers to make certain that pipe, valve and fitting flanges match in bolt pattern.

D. Drilling - For flanges at insulating flange assemblies, provide bolt holes overdrilled by an additional 1/8 inch to accommodate insulating sleeves or to facilitate alignment with the mating flange.

2.10 GASKETS

A. Gaskets for buried flanged steel pipe shall be NSF approved full faced gaskets equal to Garlock 98206, or approved equal. Gaskets must be rated for the maximum working pressures for each piping system. Where mating flanges have different inside diameters, furnish gasket with an inside diameter to match the larger flange inside diameter.

2.11 BOLTING MATERIALS

A. Bolts for AWWA C207 Class E steel pipe flanges shall be ASTM A193 grade B7 with ASTM A194 grade 2H heavy hex nuts. Bolts shall have regular unfinished square or hexagonal heads, and nuts shall have regular square or hexagonal dimensions, all in accordance with ANSI B18.2.1 for wrench head bolts and nuts and wrench openings. Washers shall conform to the specifications of ASTM F436. For underground piping, fittings and valves all nuts and bolts shall be hot dip galvanized per ASTM F2329. Bolting materials hall have product marking in accordance with ASTM A193 and ASTM A962.

PART 3 EXECUTION

3.1 INSTALLATION OF PIPE

A. The Contractor shall furnish all labor and materials required for installation.

B. Handling and Storage: All pipe, fittings, etc., shall be carefully handled and protected against damage to lining and coating/interior and exterior surfaces, impact shocks, and free fall. All pipe handling equipment shall be acceptable to the Owner's Representative. Pipe shall not be placed directly on rough ground but shall be supported in a manner which will protect the pipe against injury whenever stored at the trench site or elsewhere. Pipe shall be handled and stored at the trench site in accordance with the Paragraph in Part 2 entitled "Handling and Storage." No pipe shall be installed where the lining or coating/interior or exterior surfaces show cracks that may be harmful as determined by the Owner's Representative. Such damaged lining and coating/interior and exterior surfaces, shall be repaired, or a new undamaged pipe shall be furnished and installed.

C. All pipe damaged after delivery shall be repaired or replaced by the Contractor, to the satisfaction of the Owner's Representative.

D. The Contractor shall inspect each pipe and fitting to ensure that there are no damaged areas. The Contractor shall remove or smooth out any burrs, gouges, weld splatter or other small defects prior to laying the pipe.

E. Before placement of pipe in the trench, each pipe or fitting shall be thoroughly cleaned of any foreign substance, which may have collected thereon and shall be kept clean at all times thereafter. For this purpose, the openings of all pipes and fittings in the trench shall be closed during any interruption to the Work.

F. Pipe Laying: When the pipe is being laid, it shall be turned and placed where possible, so that any slightly damaged portion will be on top. The damaged area shall be repaired for the protection of any exposed steel. All damaged areas shall be repaired using materials and methods acceptable to the Owner's Representative.

G. Pipe shall be laid directly on the imported bedding material. No blocking will be permitted, and the bedding shall be such that it forms a continuous, solid bearing for the full length of the pipe. Excavations shall be made as needed to facilitate removal of handling devices after the pipe is laid. Bell holes shall be formed at the ends of the pipe to prevent point loading at the bells or couplings. Excavation shall be made as needed outside the normal trench section at field joints to permit adequate access to the joints for field connection operations and for application of coating on field joints.

H. Moderate deflections and long radius curves may be made by means of beveled joints rings, by pulling standard joints, by using short lengths of pipe, or a combination of these methods; provided that pulled joints shall not be used in combination with bevels. The maximum total allowable angle of beveled joints shall be 5 degrees per pipe joint. Bevels shall be provided on the bells ends. Mitering of the spigot ends will not be permitted. The maximum allowable angle for pulled joints shall be in accordance with the manufacturer's recommendations or the angle which results from a 3/4-inch pull out from normal joint closure, whichever is less. All horizontal deflections or fabricated angles shall fall on alignment. The cord produced by deflecting the pipe shall be no further than 6 inches from the alignment shown.

I. Each section of pipe shall be laid in the order and position shown on the laying schedule. In laying pipe, it shall be laid to the set line and grade, within approximately one inch plus or minus. Ensure no localized high spot are present in the line.

J. Where necessary to raise or lower the pipe due to unforeseen obstructions or other causes, the Owner's Representative may change the alignment and/or the grades. Such changes shall be made by the deflection of joints, by the use of bevel adapters, or by the use of additional fittings. However, in no case shall the deflection in the joint exceed 75% of the maximum deflection recommended by the pipe manufacturer. No joint shall be misfit any amount which will be detrimental to the strength and water tightness of the finished joint. In all cases the joint opening, before finishing with the protective mortar inside the pipe, shall be the controlling factor.

K. Except for short runs which may be permitted by the Owner's Representative, pipes shall be laid uphill on grades exceeding 10 percent. Pipe which is laid on a downhill grade shall be blocked and held in place until sufficient support is furnished by the following pipe to prevent movement. All bends shall be properly installed as shown.

L. Pipe struts shall remain in place until backfill has been placed and compacted. After compaction, the struts shall be removed and shall remain the property of the Supplier.

M. Cold Weather Protection: No pipe shall be installed upon a foundation into which frost has penetrated or at any time that there is a danger of the formation of ice or penetration of frost at the bottom of the excavation. No pipe shall be laid unless it can be established that the trench will be backfilled before the formation of ice and frost occurs.

N. Pipe and Specials Protection: The openings of all pipe and specials where the pipe and specials have been cement mortar lined in the shop shall be protected with suitable bulkheads to maintain a moist atmosphere and to prevent unauthorized access by persons, animals, water or any undesirable substance. The bulkheads shall be so designed to prevent drying out of the interior of the pipe. At all times, means shall be provided to prevent the pipe from floating.

O. Pipe Cleanup: As pipe laying progress, the Contractor shall keep the pipe interior free of all debris. The Contractor shall completely clean the interior of the pipe of all sand, dirt, mortar splatter and any other debris following completion of pipe laying, pointing of joints and any necessary interior repairs prior to testing and disinfecting the completed pipeline.

3.2 WELDED JOINTS

A. General: Field welded joints shall be in accordance with ANSI/AWWA C206.

B. Where exterior welds are performed, adequate space shall be provided for welding and inspection of the joints.

C. During installation of welded steel pipe in either straight alignment or on curves, the pipe shall be laid so that at any point around the circumference of the joint there is the minimum lap shown and a minimum space of 3/4-inch plus the thickness of the steel pipe wall between the spigot end of the pipe and the nearest tangent to a bell radius.

D. Butt straps, where used or required, shall be as shown and the same wall thickness as the thicker adjacent pipe. Each joint shall be field welded inside and out. The space between the welds shall be tapped and air tested similar to the testing for other joints. Buttstraps shall be fabricated for the actual OD and roundness of the adjacent pipe.

E. After the pipe and pipe joint are properly positioned in the trench, the length of pipe between joints shall be backfilled to at least one foot above the top of the pipe. Care shall be exercised during the initial backfilling to prevent movement of the pipe and to prevent any backfill material from being deposited on the joint.

F. To control temperature stresses, the unbackfilled joint areas of the pipe shall be shaded from the direct rays of the sun by the use of properly supported awnings, umbrellas, tarpaulins or other suitable materials for a minimum period of 2 hours prior to the beginning of the welding operation and until the weld has been completed. Shading materials at the joint area shall not rest directly on the pipe but shall be supported to allow air circulation around the pipe. Shading of the pipe joints need not be performed when the ambient air temperature is below 45 degrees F.

G. Prior to the beginning of the welding procedure, any tack welds used to position the pipe during laying shall be removed. Any annular space between the faying surfaces

of the bell and spigot shall be equally distributed around the circumference of the joint by shimming, jacking or other suitable means. The weld shall then be made in accordance with ANSI/AWWA C206. Where more than one pass is required, each pass except the first and final one shall be peened to relieve shrinkage stresses; and all dirt, slag and flux shall be removed before the succeeding bead is applied.

H. All welded lap joints and buttstrap joints shall be air tested in accordance with the requirements of AWWA C206.

I. Following testing of the joint, the exterior joint spaces shall be coated in accordance with these specifications after which backfilling may be completed.

J. Qualifications of Procedures and Welders: All welders and welding procedures used to install pipe shall be prequalified under provisions of ANSI/AWS D1.1 as specified above under Welder Qualifications. Welding procedures shall be required for field attachments and field welded joints.

K. Joints: The pipe ends shall be cut straight on joints where butt straps are used for realignment, adjustment or deflection and fillet welds shall be made as shown.

3.3 BURIED JOINT COATING AND LINING

A. General: The interior and exterior joint recesses shall be thoroughly wiped clean and all water, loose scale, dirt and other foreign material shall be removed from the inside surface of the pipe. The joint grout shall be non-shrink grout furnished by the Contractor. Non-shrink grout shall be prepackaged, inorganic, non-gas-liberating, non-metallic, cement-based grout requiring only the addition of water. Manufacturer's instructions shall be printed on each bag or other container in which the materials are packaged. The specific formulation for each class of non-shrink grout specified herein shall be that recommended by the manufacturer for the particular application. Non-shrink grout shall have a minimum 28-day compressive strength of 5000 psi; shall have no shrinkage (0.0 percent) and a maximum 4.0 percent expansion in the plastic state when tested in accordance with ASTM C-827; and shall have no shrinkage (0.0 percent) and a maximum of 0.2 percent expansion in the hardened state when tested in accordance with CRD C 621.

B. Joint Coating: After the pipe has been laid and after sufficient backfill has been placed between the joints to hold the pipe securely in place, the outside annular space between pipe sections shall be completely filled with non-shrink grout formed by the use of polyethylene foam-lined fabric bands. The grout space prior to filling shall be flushed with water so that the surface of the joint to be in contact with the grout will be thoroughly moistened when the grout is poured. The joint shall be filled with grout by pouring from one side only, and shall be rodded with a wire or other flexible rod or vibrated so that the grout completely fills the joint recess by moving down on one side of the pipe, around the bottom of the pipe and up the opposite side. Pouring and

rodding the grout shall be continued to allow completion of the filling of the entire joint recess in one operation. Care shall be taken to leave no unfilled space. Grouting of the outside joint spaces shall be kept as close behind the laying of the pipe as possible.

C. Grout Bands (Diapers): The grout bands shall be furnished by the Supplier. The grout bands or heavy-duty diaper shall be polyethylene foamed-lined fabric with steel strapping of sufficient strength to hold the fresh grout, resist rodding of the grout and allow excess water to escape. The foam plastic shall be 100 percent closed cell, chemically inert, insoluble in water and resistant to acids alkalis and solvents, and shall be Dow Chemical Company, Ethafoam 222, or equal.

D. The fabric backing shall be cut and sewn into 9-inch wide strips with slots for the steel strapping on the outer edges. The polyethylene foam shall be cut into strips 6 inches wide and slit to a thickness of 1/4-inch which will expose a hollow or open cell surface on one side. The foam liner shall be attached to the fabric backing with the opening or hollow cells facing towards the pipe. The foam strip shall cover the full interior circumference of the grout band with sufficient length to permit an 8-inch overlap of the foam at or near the top of the pipe joint. Splices to provide continuity of the material will be permitted. The polyethylene foam material shall be protected from direct sunlight.

E. The polyethylene foam-lined grout band heavy-duty diaper shall be centered over the joint space with approximately equal widths extending over each pipe end and securely attached to the pipe with the steel straps. After filling the exterior joint space with non-shrink grout, the flaps shall be closed and overlapped in a manner that fully encloses the grout with polyethylene foam. The grout band shall remain in position on the pipe joint. The grout band shall overlap the mortar or liquid epoxy coating by three inches minimum. If such an overlap is not achieved, then field joint shall be top coated with pipeline tape in accordance with ANSI/AWWA C214, after placement of the field joint mortar epoxy. The tape shall be applied to 39 mils minimum of thickness and overlap the mortar or coal tar epoxy three inches minimum.

F. Joint Lining: After the backfill has been completed to final grade, the interior joint recess shall be filled with mortar of stiff consistency mixed in proportions of 1 part cement to 2 parts sand. The mortar shall be tightly packed into the joint recess and troweled flush with the interior surface, and all excess shall be removed. At no point shall there be an indentation or projection of the mortar exceeding 1/16-inch. With pipe smaller than 24 inches in diameter, before the spigot is inserted into the bell, the bell shall be daubed with mortar containing 1 part cement to 2 parts sand. The spigot end then shall be forced to the bottom of the bell and excess mortar on the inside of the joint shall be swabbed out. Wire fabric or ribbon mesh reinforcement shall be used for field applied lining repairs, per AWWA C602

G. Curing of the in-place cement-mortar lining shall be in accordance with ANSI/AWWA C602. The Supplier shall provide additional protective devices as required to ensure that the air-tight covers, which maintain a moist condition in the pipeline, are not damaged.

H. Defective areas encompassing the full diameter of the pipe shall be replaced by machine wherever the length measured along the pipe centerline is greater than 5 feet; otherwise defective areas may be replaced by hand.

3.4 INSTALLATION OF PIPE APPURTENANCES

A. Protection of Appurtenances: Where the joining pipe is concrete or coated with cement mortar, buried appurtenances shall be coated with a minimum thickness of one inch of cement mortar having one part cement to not more than 2 parts plaster sand. The mortar shall then be top coated with coal-tar epoxy and polyethylene encasement where the adjacent pipe is so coated.

B. Installation of Valves: All valves shall be handled in a manner to prevent any injury or damage to any part of the valve. All joints shall be thoroughly cleaned and prepared prior to installation. The Contractor shall adjust all stem packing and operate each valve prior to installation to insure proper operation.

C. All buried valves between insulating couplings shall be coated and protected in accordance with Section 09 90 00, Painting and Coatings.

D. All valves shall be installed so that the valve stems are plumb and in the location shown on the drawings.

E. Installation of Flanged Joints: Before the joint is assembled, the flange faces shall be thoroughly cleaned of all foreign material with a power wire brush. The gasket shall be centered, and the connecting flanges drawn up watertight without unnecessary stressing of the flanges. All bolts shall be tightened in a progressive diametrically opposite sequence per AWWA C604 and torqued with a suitable, approved and calibrated torque wrench. All clamping torque shall be applied to the nuts only

F. Between insulating couplings all buried flanges shall be coated and protected in accordance with Section 09 90 00, Painting and Coatings.

G. Insulated Joints: Insulated joints and appurtenances features shall be made by the Contractor as shown on the drawings and between dissimilar metals. The Contractor shall exercise special care when installing these joints to prevent electrical conductivity across the joint. After the insulated joint is completed, an electrical continuity test will be performed by the Contractor. Should the continuity test indicate a short circuit, the Contractor shall remove the insulating units to inspect for damages, replace all damaged portions, and reassemble the insulating joint. The insulated joint shall then

be retested to assure proper insulation. All buried insulated joints shall be coated and protected in accordance with the details shown in the drawings.

H. Flexible Coupled Joints: When installing flexible couplings, care shall be taken that the connecting pipe ends, couplings and gaskets are clean and free of all dirt and foreign matter with special attention being given to the contact surfaces of the pipe, gaskets and couplings. The couplings shall be assembled and installed in conformity with the recommendation and instruction of the coupling manufacturer.

I. Wrenches used in bolting couplings shall be of a type and size recommended by the coupling manufacturer. Coupling bolts shall be tightened so as to secure a uniform annular space between the follower rings and the body of the pipe with all bolts tightened approximately the same amount. Diametrically opposite bolts shall be tightened progressively and evenly. Final tightening shall be done with a suitable, approved and calibrated torque wrench set for the torque recommended by the coupling manufacturer. All clamping torque shall be applied to the nut only. Contractor is to provide as-built torque information.

J. Upon completion of the coupled joint, the coupling and bare metal of the pipe shall be cleaned, primed and protected in accordance with the requirements of Section 09 90 00, Painting and Coatings.

3.5 WELDING LEAD PORTS

A. Ports to accommodate welding leads for pipe joint welding may be provided at the Contractor's option and expense. As needed, provide 1-1/2" diameter maximum thread-o-let size. Plug thread-o-lets with threaded, steel plug per pipe manufacture's requirements and coat with mortar following joint welding.

END OF SECTION

SECTION 33 92 10.31

FABRICATED SPECIALS – STEEL PIPE

PART 1 GENERAL

1.1 SCOPE OF WORK

A. This specification covers steel piping fabricated specials for all underground steel mains.

B. Fabricate and test all bends, reducers, wyes, tees, crosses, outlets, manifolds, dry tap outlets and all other steel plate specials, complete in accordance with the requirements of the Contract Documents.

C. All buried steel specials shall be mortar lined and mortar coated unless otherwise shown or specified. Steel Pipe fittings and specials between flexible couplings shall be finished with a liquid epoxy coating.

1.2 REFERENCE SPECIFICATIONS, CODES, AND STANDARDS

A. Commercial Standards:

ANSI/AWWA C200 Steel Water Pipe 6 In and Larger.

ANSI/AWWA C 205 Cement-Mortar Protective Lining and Coating for Steel Water Pipe – 4 Inches and Larger – Shop Applied

ANSI/AWWA C207 Steel Pipe Flanges for Waterworks Service, Sizes 4 In. Through 144 In.

ANSI/AWWA C 208 Dimensions for Fabricated Steel Water Pipe Fittings

ANSI/AWWA C210 Liquid-Epoxy Coatings and Linings for Steel Water Pipe and Fittings

ANSI/AWWA C213 Fusion-Bonded Epoxy Coatings and Linings for Steel Water Pipe and Fittings

ASTM E 709-8 Standard Guide for Magnetic Particle Testing.

ANSI/AWWA C208 Dimensions for Fabricated Steel Water Pipe Fittings.

ASTM A234 Specification for Piping Fittings of Wrought Carbon Steel and Alloy Steel for Moderate and Elevated Temperatures.

AWWA M-11 Steel Water Pipe - A Guide for Design and Installation.

1.3 SUBMITTALS

A. Shop Drawings: The Supplier shall submit certified shop drawings and laying diagrams of all pipe, joints, bends, reducers, wyes, tees, crosses, outlets, manifolds, dry tap outlets, harnessed joints, and other steel plate specials in accordance with the contract requirements prior to manufacture of pipe specials.

B. Material Certifications: A certified affidavit of compliance shall be furnished for all steel plate specials and other products or materials furnished under this section of the specifications.

C. Lining and coating data.

D. The Supplier and Contractor shall submit welder certification as required by this specification.

E. Submit on all flange connections as specified in Section 33 92 10.30, Steel Water Utility Transmission Piping. Include flange bolt torque calculations and bolt tightening procedures.

1.4 QUALITY ASSURANCE

A. The pipe manufacturer shall be certified by the Steel Plate Fabricator's Association (SPFA) or ISO 9001 and shall be experienced in fabrication of AWWA C200 pipe of similar diameter, lengths and wall thickness to this work.

B. The fabrication of steel piping and fittings shall be conducted within the same fabrication facility, including, but not limited to welding, lining, coating and testing.

C. Shop Testing of Steel Plate Specials: Upon completion of the welding, but prior to lining and coating, each steel plate special shall be bulk headed and tested under a hydrostatic pressure of 1-1/2 times the design pressure. If straight pipe used in fabricating the specials has been previously tested and meets the requirements of the applicable piping Section, no further hydrostatic testing will be required; provided, that all other welded seams are tested by the magnetic particle inspection procedure conforming to ASTM E 709-8, Standard Guide for Magnetic Particle Testing, or where applicable by the soap and compressed air method at an air pressure of 25 psi. Any pin holes or porous welds which may be revealed by the test shall be chipped out and rewelded and the pipe or fitting retested.

D. No outside mortar or other coating shall be applied over a seam prior to testing; however, mortar lining may be applied over a seam prior to hydrostatic testing, but under such conditions said pressure test shall be held on the pipe or fitting for a period of not less than 30 minutes.

E. All welding shall be done by skilled welders, welding operators, and tackers who have had adequate experience in the methods and materials to be used. Welders shall be qualified under the provisions of ANSI/AWS D1.1 by an independent local, approved testing agency. Machines and electrodes similar to those used in the Work shall be used in qualification tests.

PART 2 PRODUCTS

2.1 GENERAL

A. Specials are defined as fittings, closure pieces, bends, reducers, wyes, tees, crosses, outlets, manifolds, and other steel plate specials wherever located, and all piping above ground or in structures.

2.2 DESIGN

A. Design: Except as otherwise provided herein, design, materials, fabrication and shop testing of straight pipe shall conform to the requirements of ANSI/AWWA C200, and shall conform to the dimensions of ANSI/AWWA C208. The minimum thickness of plate for pipe from which specials are to be fabricated shall be the greater of that as determined by the following two formulas:

(1) $T = \frac{P_w D/2}{Y/Sw}$ (2) $T = \frac{P_t D/2}{Y/St}$

Where

T= Steel cylinder thickness in inches
D= Outside diameter of steel cylinder in inches
P_w= Design working pressure in psi
P_t= Design transient pressure in psi
Y= Specified minimum yield point of steel in psi
S_w= Safety factor of 2.5 at design working pressure
S_t= Safety factor of 1.875 at design transient pressure

B. In no case shall plate thickness be less than the thickness of adjacent mainline pipe or 1/4-inches.

2.3 FABRICATION AND MATERIALS

A. Steel for Cylinder and Fittings - Pipe manufactured under ANSI/AWWA C200 shall satisfy the following requirements:

1. Minimum yield strength of steel is 36 ksi.
2. Be manufactured by a continuous casting process

3. Be fully killed
4. Be fine grain practice
5. Have maximum carbon content of 0.25 percent
6. Have maximum sulfur content of 0.04 percent
7. Have minimum elongation of 22 percent in a 2-inch gauge length.

B. General: Reinforcement for wyes, tees, outlets, and nozzles shall be designed in accordance with AWWA Manual M-11. Reinforcement shall be designed for the design pressure specified or shown and shall be in accordance with the details shown. Specials and fittings shall be equal in pressure design strength and shall have the same lining and coating as the adjoining pipe. Unless otherwise shown, the minimum radius of elbows shall be 2.5 times the pipe diameter and the maximum miter angle on each section of the elbow shall not exceed 11-1/4 degrees.

C. Specials and fittings that cannot be mechanically mortar lined and coated shall be lined and coated by hand-application, using the same materials as are used for the pipe and in accordance with the applicable AWWA or ASTM Standards. Coating and lining applied in this manner shall provide protection equal to that specified for the pipe. Fittings may be fabricated from pipe that has been mechanically lined and/or coated. Areas of lining and coating that have been damaged by such fabrication shall be repaired by hand-applications in accordance with applicable AWWA or ASTM Standards.

D. Access manholes with covers shall be as detailed. All threaded outlets shall be forged steel suitable for minimum 350 psi service, and shall be as manufactured by Vogt or equal.

E. Moderate deflections and long radius curves may be made by means of beveled joint rings, by pulling standard joints, by using short lengths of pipe, or a combination of these methods; provided that pulled joints shall not be used in combination with bevels. The maximum total allowable angle for beveled joints shall be 5 degrees per pipe joint. Bevels shall be provided on the bell ends. Mitering of the spigot ends will not be permitted. The maximum allowable angle for pulled joints shall be in accordance with the manufacturer's recommendations or the angle which results from a 3/4-inch pull out from normal joint closure, whichever is less. All horizontal deflections or fabricated angles shall fall on the alignment.

F. The chord produced by deflecting the pipe shall be no further than 6 inches from the alignment shown.

G. All vertical deflections shall fall on the alignment and at locations adjacent to underground obstructions, points of minimum earth cover, and pipeline outlets and structures, the pipe angle points shall match the angle points shown.

H. Outlets, Tees, Wyes, and Crosses: Outlets 12-inch and smaller may be fabricated from Schedule 40 or heavier steel pipe in the standard outside diameters, i.e., 12-3/4-inch, 10-3/4-inch, 8-5/8-inch, 6-5/8-inch, and 4-1/2-inch.

I. The design of outlet reinforcement shall be in accordance with the procedures given in Chapter 13 of AWWA Manual M-11, except that the design pressure, P, used in the M11 procedure shall equal the greater of 1.25 P_w or 0.9375 P_t. Unless otherwise shown, outlets 2 inches in diameter and smaller need not be reinforced.

J. In lieu of saddle or wrapper reinforcement as provided by the design procedure in Manual M-11, pipe or specials with outlets may be fabricated in their entirety of steel plate having a thickness equal to the sum of the pipe wall plus the required reinforcement.

K. Where required by the M-11 design procedure crotch plate reinforcement shall be furnished.

L. Steel Welding Fittings: Steel welding fittings shall conform to ASTM A 234.

M. Flanges – Flanges shall be as specified in Section 33 92 10.30, Steel Water Utility Transmission Piping.

N. Mortar Lining: All requirements pertaining to thickness, application and curing of lining specified for straight pipe shall apply to specials, with the following provision. If the special cannot be lined centrifugally, it shall be lined by hand. In such case, the lining shall be reinforced with 2-in by 4-in, No. 12 welded wire fabric positioned approximately in the center of the lining. The wires spaced 2-in on centers shall extend circumferentially around the pipe with the fabric securely fastened to the pipe. Splices shall be lapped 4 inches and the free ends tied or looped to assure continuity.

O. Mortar Coating: All requirements pertaining to thickness, application and curing of coating specified for straight pipe shall apply to specials. Unless otherwise shown, the mortar coating on the buried portion of a pipe section passing through a structure wall shall extend to the center of the wall, or to the wall flanges, if one is indicated.

P. Epoxy Lining and Coating: All epoxy lining and coating systems shall conform to AWWA C210 for liquid epoxy or C213 for fusion bonded epoxy, be NSF-61 approved where in contact with potable water (pipe lining), and shall be as follows:

1. FUSION BONDED EPOXY (AWWA C213)

    a. Location -- Ferrous surfaces of valves, sleeve couplings, and steel pipe and fittings.

    b. Surface Preparation -- As recommended by coating Manufacturer.

c. Coating System -- The coating material shall be a 100 percent powder epoxy applied in accordance with the ANSI/AWWA C213 "AWWA Standard for Fusion-Bonded Epoxy Coating for the Interior and Exterior of Steel Water Pipelines". The coating shall be applied using the fluidized bed process.

d. Liquid Epoxy -- For field repairs, the use of a liquid epoxy will be permitted, applied in not less than 3 coats to provide a DFT 16 mils. The liquid epoxy shall be a 100 percent solids epoxy recommended by the powder epoxy manufacturer.

e. Coating (DFT = 16 mils), Scotchkote 203, or equal.

f. Total system DFT = 16 mils.

2. LIQUID EPOXY (AWWA C210)

a. Location -- Ferrous surfaces of steel pipe and fabricated specials.

b. Surface Preparation -- As recommended by the coating manufacturer

c. Coating System – Prime, intermediate, and topcoat, 4.0-6.0 mils each coat of Tnemec Series 20 Pota-Pox. Color as selected by Owner.

d. Coating Repairs - For epoxy coating repair areas, provide 100% solids two component quick cure epoxy coating as recommended by coating manufacturer.

3. SURFACE TOLERANT EPOXY - Provide surface tolerant epoxy coating system for buried steel piping and specials where specified. Coating system shall be PRE-PRIME™ 167 Sealer and then top coat with BAR-RUST® 233H, or equal. Total system minimum thickness shall be 12 mils DFT.

Q. Marking: A mark indicating the true vertical axis of the special shall be placed on the top and bottom of the special.

R. Field weld coating repair shall be in accordance with AWWA C205.

S. All thrust restraint of couplings as shown on the Plans or as required shall be designed per AWWA M-11 for minimum 350 psi working pressure for discharge main piping and minimum 300 psi working pressure for suction main piping..

T. Transition end piece for butt strap connection to existing pipe shall match the outside diameters of the existing connecting steel piping. Contractor Contractorshall expose existing piping at the connection points and take measurements to verify location, shape, out of roundness, dimensions and existing joint locations prior to fabrication.

U. A maximum clearance of 3/16-inch will be allowed between faying surfaces of welded lap joint for connection to existing pipe, where shown on the Plans. Contractor Contractorshall expose existing piping at the connection points and take measurements to verify location, shape, out of roundness, dimensions and existing joint locations prior to fabrication.

V. Bolting Materials: Bolting materials shall be as specified in Section 33 92 10.30, Steel Water Utility Transmission Piping.

W. Flanged Joint Calculations: The Contractor Contractorshall submit product information and calculations from the gasket supplier. At a minimum the submittal shall include:

- Gasket factors
- Gasket load calculations
- Bolt torque
- Bolt lubricant
- Calculated bolt elongation
- Calculated bolt stress

X. Bolt tightening procedure: The Contractor Contractorshall submit the procedure to be used to tighten the bolts at all flanged joints. The procedure to be used shall ensure that the calculated bolt stress is introduced to each bolt and to ensure that the gasket is properly seated so the joint will not leak. At a minimum the procedure shall include the following:

- Inspection procedure for gasket seating surfaces, gaskets and, bolts, nuts and washers.
- The type and amount of lubricant to be used and where it is to be applied.
- Number each bolt in the joint in order indicating the sequence to be followed when tightening.
- Indicate the final torque to be applied to each bolt.
- Describe the tightening procedure to be used. For example: 1) Tighten each bolt in sequential order to 30% of the final torque, 2) tighten each bolt in sequential order to 60% of the final torque and 3) tighten each bolt in sequential order to the final torque.

Y. Gaskets: Shall be as specified in Section 33 92 10.30, Steel Water Utility & Distribution Piping.

PART 3 EXECUTION

3.1 GENERAL

A. Unless otherwise provided, the Supplier shall furnish all fittings, closure pieces, bends, reducers, wyes, tees, crosses, outlets, manifolds, and other steel plate specials, bolts,

nuts, gaskets, jointing materials, and all other appurtenances as shown and as required to provide a complete and workable installation. The Contractor shall furnish all labor and materials required for installation. Where pipe support details are shown, the supports shall conform thereto and shall be placed as indicated; provided, that the support for all exposed piping shall be complete and adequate regardless of whether or not supporting devices are specifically shown. Where shown, concrete thrust blocks and welded joints shall be provided. At all times when the Work of installing pipe is not in progress, all openings into the pipe and the ends of the pipe in trenches or structures shall be kept tightly closed to prevent entrance of animals and foreign materials. The Contractor shall take all necessary precautions to prevent the pipe from floating due to water entering the trench from any source, shall assume full responsibility for any damage due to this cause and shall at its own expense restore and replace the pipe to its specified condition and grade if it is displaced due to floating. The Contractor shall maintain the inside of the pipe free from foreign materials and in a clean and sanitary condition until its final acceptance by the Owner.

3.2 LAYING

A. Trenches shall be in a reasonable dry condition when the pipe special is laid. Necessary facilities including slings shall be provided for lowering and properly placing the pipe sections in the trench without damage. The pipe and specials shall be laid to the line and grade shown and they shall be closely jointed to form a smooth flow line.

B. Immediately before placing each section of pipe in final position for jointing, the bedding for the pipe shall be checked for firmness and uniformity of surface.

END OF SECTION

SECTION 40 05 23.18

BUTTERFLY VALVES

PART 1 GENERAL

1.1 SUMMARY

A. This Section includes butterfly valves for use in buried service. Coordinate with Section 33 12 16, Water Utility Distribution & Transmission Valves & Section 33 92 10.30, Steel Water Utility Transmission Piping.

B. Section Includes:

1. Rubber-seated butterfly valves.

1.2 RELATED SECTIONS

A. Section 33 12 16, Water Utility Distribution & Transmission Valves.
B. Section 33 92 10.30, Steel Water Utility Transmission Piping.

1.3 REFERENCE STANDARDS

A. American Society of Mechanical Engineers:

1. ASME B16.1 - Gray Iron Pipe Flanges and Flanged Fittings.

2. ASME B16.5 - Pipe Flanges and Flanged Fittings: NPS 1/2 through 24 - Metric/Inch Standard.

3. ASME B16.42 - Ductile Iron Pipe Flanges and Flanged Fittings: Classes 150 and 300.

B. ASTM International:

1. ASTM A126 - Standard Specification for Gray Iron Castings for Valves, Flanges, and Pipe Fittings.

2. ASTM A536 - Standard Specification for Ductile Iron Castings.

3. ASTM B62 - Standard Specification for Composition Bronze or Ounce Metal Castings.

4. ASTM B584 - Standard Specification for Copper Alloy Sand Castings for General Applications.

C. American Water Works Association:

1. AWWA C504 - Rubber-Seated Butterfly Valves, 3 In. (75 mm) Through 72 In. (1,800 mm).

2. AWWA C550 - Protecting Interior Coatings for Valves and Hydrants.

D. National Sanitation Foundation International:

1. NSF/ANSI Standard 61 - Drinking Water System Components - Health Effects

2. NSF/ANSI Standard 372 - Drinking Water System Components - Lead Content

1.4 SUBMITTALS

A. Section 01 33 00 - Submittal Procedures: Requirements for submittals.

B. As required by Section 33 12 16 - Water Utility Distribution & Transmission Valves.

PART 2 PRODUCTS

2.1 GENERAL

A. All materials in contact with potable water shall conform to ANSI/NSF Standard 61 and meet the “lead free” requirements of the Safe Drinking Water Act amendment, effective January 4, 2014, as per the lead content evaluation procedures outlined in NSF/ANSI Standard 372.1.

1. All fittings shall either be cast or permanently stamped with markings identifying the item as complying with NSF 61 per the requirements of NSF 372 for “lead free”.

2. All brass in contact with potable water shall comply with ASTM B584.

2.2 RUBBER-SEATED BUTTERFLY VALVES

A. Description:

1. Comply with AWWA C504, Class 250B as indicated in the Drawings.

2. Minimum Pressure Rating:

a. 24-inch (300-mm) Diameter: 250 psig.

3. End Connections: As shown in the Drawings.

a. Standard mechanical joint ends comply with ANSI/AWWA C111.

b. Flanged end dimensions and drilling comply with ANSI/ASME B16.1, class 125, unless shown otherwise. Comply with AWWA C115 & ASME 16.5.

1) The Contractor shall coordinate with pipe, valve and fitting suppliers to make certain pipe, valve and fitting flanges match in bolt pattern.

4. Gear Actuators: Conforming to AWWA C504 for manual valves.

5. Linings and Coatings:

a. Corrosion-resistant fusion bonded epoxy conforming to AWWA C550 and NSF 61.

b. All internal and external ferrous surfaces.

c. Do not coat flange faces of valves.

6. Bubble-tight at the rated pressure for bi-directional flow.

7. Style: Wafer.

8. Shaft: Self-lubricating, sleeve-type bearings. One-piece, through-shaft construction.

a. Valve shafts shall be full size for that portion of the shaft extending through the valve bearings, valve disc and shaft seal.

b. Any portion of the shaft turned down for any reason shall have fillets with radii equal to the offset to minimize stress concentrations at the junction of the different shaft diameters. The turned down portion of the shaft shall be capable of transmitting the maximum operator torque without exceeding a torsional steel stress of 11,500 psi.

9. Seats: Mounted on body for valves 24 inches and smaller; field replaceable (mechanically retained in a machined groove) for valves larger than 24 inches.

10. Packing: Replaceable without dismantling valve.

B. Operation:

1. Open counterclockwise, unless otherwise indicated in the Drawings.

2. Operators shall be of the traveling nut, self- locking type and shall be designed to hold the valve in any intermediate position between full open and fully closed without creeping or fluttering.

3. Buried Valves: All buried valves shall be provided with 2-inch square operating nuts.

C. Materials:

1. Body: ASTM A536, ductile iron. Integrally cast flanged or mechanical end joints.

2. Shaft: Stainless steel.

3. Disc: ASTM A126, cast iron or ASTM A536, ductile iron.

4. Seats: Resilient, replaceable, Buna-N.

5. Seating Surfaces: Type 316 stainless steel.

6. Bearings:

a. Sleeve: Corrosion-resistant and self-lubricating.

D. Manufacturers:

1. M&H Valve.
2. Henry Pratt Company.
3. Mueller Company.
4. Kennedy Valve Company.
5. Dezurik.
6. Val-Matic Valve & Manufacturing Corporation.

2.3 SOURCE QUALITY CONTROL

A. Testing: Test butterfly valves according to AWWA C504.

PART 3 EXECUTION

3.1 INSTALLATION

A. As required by Section 33 12 16, Water Utility Distribution & Transmission Valves.

B. Install according to manufacturer's instructions.

END OF SECTION

Public Works Department
22500 Salamo Road
West Linn, Oregon 97068
Telephone: (503) 722-5500
Fax: (503) 656-4106

Appendix C

PLANS

CITY OF WEST LINN
SOUTH FORK 24-INCH PIPE RESTRAINT
PROJECT NO. PW-18-01

JUNE 2018

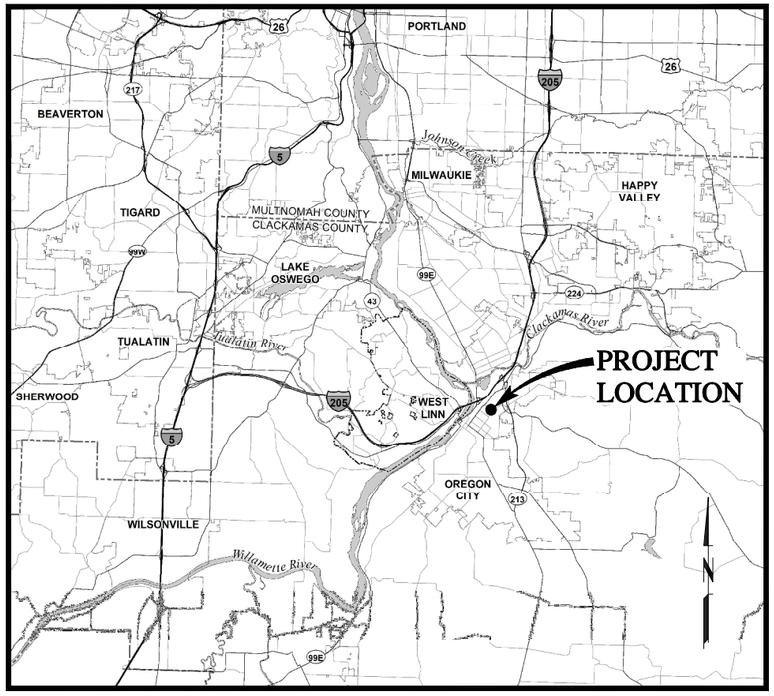

VICINITY MAP

SCALE: 1"=2 MILES

INDEX OF DRAWINGS

GENERAL

1	G-1	TITLE SHEET/VICINITY MAP/LOCATION MAP/INDEX OF DRAWINGS
2	G-2	ABBREVIATIONS
3	G-3	SYMBOLS AND LEGEND
4	G-4	GENERAL NOTES
5	G-5	PROJECT OVERVIEW AND DISINFECTION PLAN

CIVIL

6	C-1	SITE PLAN AND EROSION CONTROL PLAN
7	C-2	MISCELLANEOUS CIVIL DETAILS - 1
8	C-3	MISCELLANEOUS CIVIL DETAILS - 2
9	C-4	MISCELLANEOUS CIVIL DETAILS - 3
10	C-5	MISCELLANEOUS CIVIL DETAILS - 4

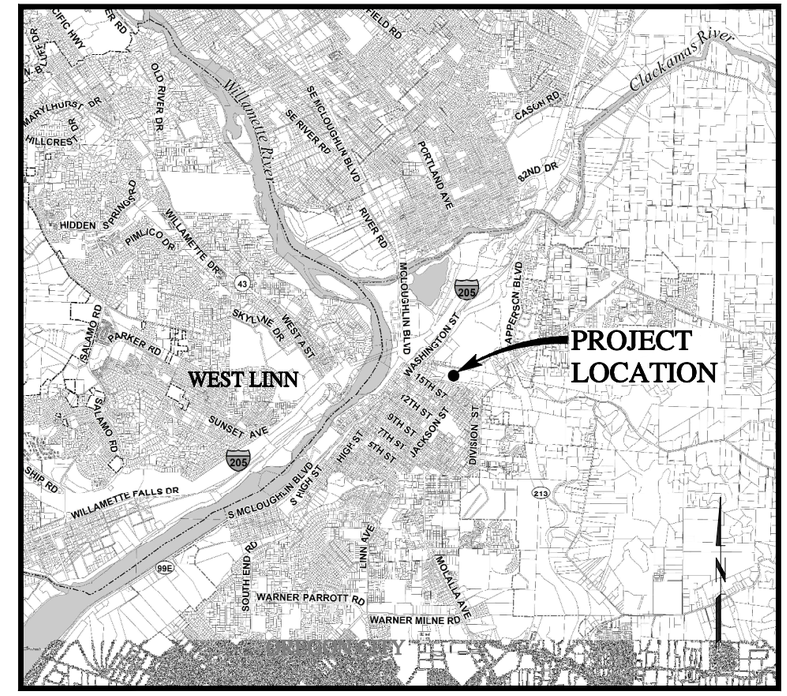

LOCATION MAP

SCALE: 1"=3,000'

murraysmith
888 SW 5TH AVENUE, SUITE 1170
PORTLAND, OREGON 97204
P 503.225.9010

Know what's **below.**
Call before you dig.

ATTENTION: OREGON LAW REQUIRES THE CONTRACTOR TO FOLLOW THE RULES ADOPTED BY THE OREGON UTILITY NOTIFICATION CENTER. THOSE RULES ARE SET FORTH IN OAR 952-001-0010 THROUGH OAR 952-001-0090. THE CONTRACTOR MAY OBTAIN COPIES OF THE RULES BY CALLING THE UTILITY NOTIFICATION CENTER. (NOTE: THE TELEPHONE NUMBER FOR THE OREGON UTILITY NOTIFICATION CENTER IS 503-246-6699.)

G:\PDX_Projects\18\2161 - West Linn South Fork 24 Inch Pipe Restraint\CAD\Sheets\18-2161-OR-G.dwg G-1 5/31/2018 4:09 PM DKH 21.0s (LMS Tech)

@	AT
AASHTO	AMERICAN ASSOCIATION OF STATE HIGHWAY & TRANSPORTATION OFFICIALS
AB	ANCHOR BOLT
ABAN (D)	ABANDON (ED)
ABS	ACRYLONITRILE BUTADIENE STYRENE
ABV	ABOVE
AC	ASPHALTIC CONCRETE
ACP	ASPHALTIC CONCRETE PAVING
ADJ	ADJUSTABLE
ADJC	ADJACENT
AFF	ABOVE FINISHED FLOOR
AFG	ABOVE FINISHED GRADE
AHR	ANCHOR
AL	ALUMINUM
ALT	ALTERNATE
AMP	AMPERE
ANSI	AMERICAN NATIONAL STANDARDS INSTITUTE
APPROX	APPROXIMATE
APPVD	APPROVED
APWA	AMERICAN PUBLIC WORKS ASSOCIATION
ARCH	ARCHITECTURAL
ARV	AIR RELEASE VALVE
ASCE	AMERICAN SOCIETY OF CIVIL ENGINEERS
ASSN	ASSOCIATION
ASSY	ASSEMBLY
ASTM	AMERICAN SOCIETY FOR TESTING & MATERIALS
ATM	ATMOSPHERE
AUTO	AUTOMATIC
AUX	AUXILIARY
AVE	AVENUE
AVG	AVERAGE
AWWA	AMERICAN WATER WORKS ASSOCIATION
B&S	BELL & SPIGOT
BC	BOLT CIRCLE
BD	BOARD
BETW	BETWEEN
BF	BOTH FACE
BFD	BACKFLOW PREVENTION DEVICE
BFILL	BACKFILL
BFV	BUTTERFLY VALVE
BHP	BRAKE HORSEPOWER
BKGD	BACKGROUND
BLDG	BUILDING
BLK	BLOCK
BLVD	BOULEVARD
BM	BENCHMARK / BEAM
BMP	BEST MANAGEMENT PRACTICE
BO	BLOW-OFF
BOC	BACK OF CURB
BS	BOTH SIDES
BSMT	BASEMENT
BTF	BOTTOM FACE
BTU	BRITISH THERMAL UNIT
BV	BALL VALVE
BW	BOTH WAYS
C	CELSIUS
C TO C	CENTER TO CENTER
CARV	COMBINATION AIR RELEASE VALVE
CATV	CABLE TELEVISION
CB	CATCH BASIN
CCP	CONCRETE CYLINDER PIPE
CCW	COUNTER CLOCKWISE
CFM	CUBIC FEET PER MINUTE
CFS	CUBIC FEET PER SECOND
CHAN	CHANNEL
CHEM	CHEMICAL
CHFR	CHAMFER
CHKV	CHECK VALVE
CI	CAST IRON
CIP	CAST IRON PIPE
CIPC	CAST IN PLACE CONCRETE
CISP	CAST IRON SOIL PIPE
CJ	CONSTRUCTION JOINT
CL	CENTER LINE
CL2	CHLORINE
CLG	CEILING
CLJ	CONTROL JOINT
CLR	CLEAR
CLSM	CONTROLLED LOW STRENGTH MATERIAL
CMP	CORRUGATED METAL PIPE
CMU	CONCRETE MASONRY UNIT
CND	CONDUIT
CO	CLEANOUT
COL	COLUMN
COMB	COMBINATION
CONC	CONCRETE
CONN	CONNECTION
CONST	CONSTRUCTION
CONT	CONTINUOUS / CONTINUATION
CONTR	CONTRACT (OR)
COORD	COORDINATE
COP	COPPER
CORP	CORPORATION
CORR	CORRUGATED
CP	CONTROL POINT
CPLG	COUPLING
CPVC	CHLORINATED POLYVINYL CHLORIDE
CR	CRUSHED ROCK
CS	COMBINED SEWER
CSP	CONCRETE SEWER PIPE
CT	COURT
CTR	CENTER
CU	CUBIC
CULV	CULVERT
CV	CONTROL VALVE
CW	CLOCKWISE / COLD WATER
CY	CUBIC YARDS
CYL	CYLINDER LOCK
D	DRAIN
DC	DIRECT CURRENT
DEFL	DEFLECTION
DET	DETAIL
DI	DUCTILE IRON
DIA	DIAMETER
DIM	DIMENSION
DIR	DIRECTION
DIST	DISTANCE
DN	DOWN
DR	DRIVE
DS	DOWNSPOUT
DWG	DRAWING
DWL	DOWEL
DWV	DRAIN WASTE AND VENT
DWY	DRIVEWAY
EA	EACH
ECC	ECCENTRIC
EF	EACH FACE
EL	ELEVATION
ELB	ELBOW
ELEC	ELECTRICAL
ENCL	ENCLOSURE
EOP	EDGE OF PAVEMENT
EQ	EQUAL
EQ SP	EQUALLY SPACED
EQUIP	EQUIPMENT
EW	EACH WAY
EXC	EXCAVATE
EXIST	EXISTING
EXIST GR	EXISTING GRADE
EXP	EXPANSION
EXP BT	EXPANSION BOLT
EXP JT	EXPANSION JOINT
EXT	EXTERIOR
F	FAHRENHEIT
F TO F	FACE TO FACE
FAB	FABRICATE
FB	FLAT BAR
FBE	FUSION BONDED EPOXY
FCA	FLANGED COUPLING ADAPTER
FCO	FLOOR CLEANOUT
FD	FLOOR DRAIN
FDN	FOUNDATION
FEXT	FIRE EXTINGUISHER
FF	FAR FACE
FGL	FIBERGLASS
FH	FIRE HYDRANT
FIN FL	FINISH FLOOR
FIN GR	FINISH GRADE
FIPT	FEMALE IRON PIPE THREAD
FITG	FITTING
FL	FLOOR CLEANOUT
FLEX	FLEXIBLE
FLG	FLANGE
FLL	FLOW LINE
FLR	FLOOR
FM	FORCE MAIN
FO	FIBER OPTIC
FOC	FACE OF CONCRETE
FOF	FACE OF FINISH
FOM	FACE OF MASONRY
FOS	FACE OF STUDS
FPM	FEET PER MINUTE
FPS	FEET PER SECOND
FRP	FIBERGLASS REINFORCED PLASTIC
FT	FEET / FOOT
FTG	FOOTING
FUT	FUTURE
FXTR	FIXTURE
G	GAS
GA	GAUGE
GAL	GALLON
GALV	GALVANIZED
GC	GROOVED COUPLING
GFA	GROOVED FLANGE ADAPTER
GI	GALVANIZED IRON
GIP	GALVANIZED IRON PIPE
GJ	GRIP JOINT
GL	GLASS
GLV	GLOBE VALVE
GND	GROUND
GPD	GALLONS PER DAY
GPH	GALLONS PER HOUR
GPM	GALLONS PER MINUTE
GPS	GALLONS PER SECOND
GR	GRADE
GR LN	GRADE LINE
GRTG	GRATING
GV	GATE VALVE
GRVL	GRAVEL
GYP	GYPSUM
HB	HOSE BIBB
HC	HOLLOW CORE
HDPE	HIGH DENSITY POLYETHYLENE
HDR	HEADER
HDWE	HARDWARE
HGR	HANGER
HGT	HEIGHT
HH	HANDHOLD
HM	HOLLOW METAL
HNDRL	HANDRAIL
HOA	HAND-OFF-AUTO
HOR	HAND-OFF-REMOTE
HORIZ	HORIZONTAL
HP	HIGH PRESSURE / HORSEPOWER
HPG	HIGH PRESSURE GAS
HPT	HIGH POINT
HR	HOUR
HSB	HIGH STRENGTH BOLT
HV	HOSE VALVE
HVAC	HEATING, VENTILATION, AIR CONDITIONING
HWL	HIGH WATER LINE
HWY	HIGHWAY
HYD	HYDRANT
HYDR	HYDRAULIC
I&C	INSTRUMENTATION & CONTROL
IAW	IN ACCORDANCE WITH
ID	INSIDE DIAMETER
IE	INVERT ELEVATION
IF	INSIDE FACE
IMPVT	IMPROVEMENT
IN	INCH
INCC	INCLUDE (D) (ING)
INFL	INFLUENT
INJ	INJECTION
INSTL	INSTALLATION / INSTALL
INSUL	INSULATION
INTER	INTERCEPTOR
INTR	INTERIOR
INV	INVERT
IP	IRON PIPE
IPT	IRON PIPE THREAD
IR	IRON ROD
IRRIG	IRRIGATION
JT	JOINT
JUNC	JUNCTION
KPL	KICK PLATE
KVA	KILOVOLT AMPERE
KW	KILOWATT
KWY	KEYWAY
L	LENGTH OF CURVE
LAB	LABORATORY
LAV	LAVATORY
LB	POUND
LF	LINEAR FOOT
LIN	LINEAL / LINEAR
LN	LANE
LOC	LOCATION
LONG	LONGITUDINAL
LP	LOW PRESSURE
LPT	LOW POINT
LRG	LARGE
LS	LONG SLEEVE / LUMP SUM
LT	LEFT
LVL	LEVEL
LWL	LOW WATER LINE
MAN	MANUAL
MATL	MATERIAL
MAX	MAXIMUM
MCC	MOTOR CONTROL CENTER
MCP	MASTER CONTROL PANEL
MECH	MECHANICAL
MET	METAL
MFR	MANUFACTURER
MGD	MILLION GALLONS PER DAY
MH	MANHOLE
MIN	MINIMUM
MIPT	MALE IRON PIPE THREAD
MISC	MISCELLANEOUS
MJ	MECHANICAL JOINT
MON	MONUMENT / MONOLITHIC
MOT	MOTOR
MP	MILEPOST
MSL	MEAN SEA LEVEL
MTD	MOUNTED
NA	NOT APPLICABLE
NC	NORMALLY CLOSED
NF	NEAR FACE
NIC	NOT IN CONTRACT
NO / NO.	NORMALLY OPEN / NUMBER
NOM	NOMINAL
NORM	NORMAL
NRS	NON-RISING STEM
NTS	NOT TO SCALE
O TO O	OUT TO OUT
OC	ON CENTER
OD	OUTSIDE DIAMETER
ODOT	OREGON DEPARTMENT OF TRANSPORTATION
OF	OVERFLOW / OUTSIDE FACE
OPNG	OPENING
OPP	OPPOSITE
ORIG	ORIGINAL
OVHD	OVERHEAD
P&ID	PROCESS & INSTRUMENTATION DIAGRAM
PC	POINT OF CURVE
PCC	POINT OF COMPOUND CURVE
PCVC	POINT OF CURVATURE ON VERTICAL CURVE
PE	PLAIN END
PERF	PERFORATED
PERM	PERMANENT
PERP	PERPENDICULAR
PG	PRESSURE GAUGE
PH	PIPE HANGER
PI	POINT OF INTERSECTION
PIVC	POINT OF INTERSECTION ON VERTICAL CURVE
PL	PROPERTY LINE / PLATE / PLASTIC
PLBG	PLUMBING
PNL	PANEL
POC	POINT OF CURVATURE
POLY	POLYETHYLENE
POT	POINT OF TANGENCY
PP	POWER POLE
PRC	POINT OF REVERSE CURVATURE
PRCST	PRECAST
PREP	PREPARATION
PRESS	PRESSURE
PRKG	PARKING
PROP	PROPERTY
PRV	PRESSURE RELIEF VALVE
PS	PUMP STATION
PSIG	POUNDS PER SQUARE INCH GAGE
PSL	PIPE SLEEVE
PSPT	PIPE SUPPORT
PT	POINT OF TANGENCY
PTVC	POINT OF TANGENCY ON VERTICAL CURVE
PV	PLUG VALVE
PVC	POLYVINYL CHLORIDE
PVMT	PAVEMENT
PWR	POWER
QTY	QUANTITY
RAD	RADIUS
RC	REINFORCED CONCRETE
RCP	REINFORCED CONCRETE PIPE
RD	ROAD / ROOF DRAIN
RDCR	REDUCER
REF	REFERENCE
REINF	REINFORCE (D) (ING) (MENT)
REQ'D	REQUIRED
RESTR	RESTRAINED
RFCA	RESTRAINED FLANGE COUPLING ADAPTER
RM	ROOM
RND	ROUND
RO	ROUGH OPENING
R/W	RIGHT OF WAY
RPBPD	REDUCED PRESSURE BACKFLOW PREVENTION DEVICE
RPM	REVOLUTIONS PER MINUTE
RR	RAILROAD
RST	REINFORCING STEEL
RT	RIGHT
SALV	SALVAGE
SAN	SANITARY
SC	SOLID CORE
SCHED	SCHEDULE
SD	STORM DRAIN
SDL	SADDLE
SDR	STANDARD DIMENSION RATIO
SECT	SECTION
SHLDR	SHOULDER
SHT	SHEET
SIM	SIMILAR
SLP	SLOPE
SLV	SLEEVE
SOLN	SOLUTION
SP	SOIL PIPE / SEWER PIPE
SPCL	SPECIAL
SPEC (S)	SPECIFICATION (S)
SPG	SPACING
SPL	SPOOL
SPRT	SUPPORT
SQ	SQUARE
SQ FT	SQUARE FOOT
SQ IN	SQUARE INCH
SQ YD	SQUARE YARD
SS	SANITARY SEWER
SST	STAINLESS STEEL
ST	STREET
STA	STATION
STD	STANDARD
STL	STEEL
STOR	STORAGE
STR	STRAIGHT
STRUCT	STRUCTURE / STRUCTURAL
SUBMG	SUBMERGED
SUCT	SUCTION
SV	SOLENOID VALVE
S/W	SIDEWALK
SWD	SIDEWATER DEPTH
SWGR	SWITCH GEAR
SYMM	SYMMETRICAL
SYS	SYSTEM
T or TEL	TELEPHONE
T&B	TOP & BOTTOM
TAN	TANGENCY
TB	THRUST BLOCK
TBM	TEMPORARY BENCH MARK
TC	TOP OF CONCRETE / TOP OF CURB
TDH	TOTAL DYNAMIC HEAD
TEMP	TEMPERATURE / TEMPORARY
T&G	TONGUE & GROOVE
THK	THICKNESS
THRD	THREAD(ED)
THRU	THROUGH
TP	TEST PIT/TOP OF PAVEMENT/TURNING POINT
TRANS	TRANSITION
TSP	TRI-SODIUM PHOSPHATE
TST	TOP OF STEEL
TW	TOP OF WALL
TYP	TYPICAL
UG	UNDERGROUND
UH	UNIT HEATER
UN	UNION
UON	UNLESS OTHERWISE NOTED
USGS	UNITED STATES GEOLOGIC SURVEY
V	VENT / VOLT
VAC	VACUUM
VB	VACUUM BREAKER
VBOX	VALVE BOX
VC	VERTICAL CURVE
VERT	VERTICAL
VFD	VARIABLE FREQUENCY DRIVE
VOL	VOLUME
VCP	VITRIFIED CLAY PIPE
VTR	VENT THROUGH ROOF
W	WATER
W/	WITH
W/O	WITHOUT
W/W	WALL TO WALL
WD	WOOD
WF	WIDE FLANGE
WH	WALL HYDRANT
WHTR	WATER HEATER
WI	WROUGHT IRON
WM	WATER METER
WP	WORKING POINT / WATERPROOFING
WS	WATER SERVICE
WT	WEIGHT
WTP	WATER TREATMENT PLANT
WTRT	WATERTIGHT
WWF	WELDED WIRE FABRIC
WWTF	WASTEWATER TREATMENT FACILITY
WWTP	WASTEWATER TREATMENT PLANT
X SECT	CROSS SECTION
XFMR	TRANSFORMER
YD	YARD DRAIN/YARD
YH	YARD HYDRANT
YR	YEAR
ZN	ZINC

NO. DATE REVISION BY

DESIGNED: JRL
DRAWN: DKH
CHECKED: TPB
APPROVED: TPB

SHEET G-2 2 of 10

REGISTERED PROFESSIONAL ENGINEER 80998 OREGON MAY 23, 2013 JUSTIN RUSSELL LUCE
RENEWS 12-31-18

SCALE VERT: AS SHOWN HORIZ: AS SHOWN
NOTICE 0 1
IF THIS BAR DOES NOT MEASURE 1" THEN DRAWING IS NOT TO SCALE

PROJECT NAME:
CITY OF WEST LINN
SOUTH FORK 24-INCH PIPE RESTRAINT
PROJECT NO. PW-18-01

SHEET TITLE:
ABBREVIATIONS

murraysmith

PROJECT: 18-2161.202 DATE: JUNE 2018

G:\PDX_Projects\18\2161 - West Linn South Fork 24 Inch Pipe Restraint\CAD\Sheets\18-2161-OR-G.dwg G-2 5/31/2018 4:09 PM DKH 21.0s (LMS Tech)

PIPE SYMBOLS

PLANT	SCHEMATIC	
		WELDED JOINT
		FLANGED JOINT
		GROOVED END JOINT
		MECHANICAL JOINT
		PUSH-ON JOINT (RUBBER GASKET)
		FLANGED COUPLING ADAPTER
		DOUBLE BALL FLEXIBLE EXTENSION COUPLING
		FLEXIBLE COUPLING W/ THRUST RING
		ELBOW UP
		ELBOW DOWN
		TEE UP
		TEE DOWN
		LATERAL UP
		LATERAL DOWN
		CONCENTRIC REDUCER
		ECCENTRIC REDUCER
		UNION
		BLIND FLANGE
		CAP
		LONG SLEEVE
		FLEXIBLE COUPLING
		CAPPED END OR PLUGGED END
		FITTING

VALVE SYMBOLS

PLANT	SCHEMATIC	
		BUTTERFLY VALVE
		GATE VALVE
		GLOBE VALVE
		BALL VALVE
		BALANCING VALVE
		DIAPHRAGM VALVE
		PLUG VALVE (TOP)
		PLUG VALVE (SIDE)
		3-WAY PLUG VALVE
		SWING CHECK VALVE
		DOUBLE CHECK ASSEMBLY
		BALL SWING CHECK
		SILENT CHECK VALVE
		PRESSURE REDUCING VALVE
		ALTITUDE CONTROL VALVE
S	S	SOLENOID VALVE
		RELIEF VALVE
		NEEDLE VALVE
		HOSE VALVE
		REDUCED PRESSURE BACKFLOW PREVENTER W/ GATE VALVES
		HOSE BIBB

TOPOGRAPHIC LEGEND

	EXISTING	PROPOSED
WATERLINE	10"W	12" DI W
ELECTRICITY	E	E
GAS	4"G	
TELEPHONE/TELEMETRY	T	
CABLE TELEVISION	CATV	
SANITARY SEWER LINE	8"SS	
SANITARY SEWER FORCE MAIN	6"FM	
STORM DRAIN	8"SD	8"SD
CULVERT		
ABANDON PIPE		
DRAINAGE DITCH		
FENCE		
CHAIN LINK FENCE		
TEMPORARY SILT FENCE		
GUARDRAIL		
ROCK WALL		
TREE/BUSH LINE		
CENTERLINE		
EASEMENT/PROPERTY LINE		
RIGHT-OF-WAY		
EDGE OF PAVEMENT/AC		
EDGE OF GRAVEL		
CURB		
SIDEWALK	S/W	
STRUCTURE OR FACILITY		
CONTOUR MINOR		
CONTOUR MAJOR	200	200
MANHOLE		
CLEAN-OUT		
CATCH BASIN/FIELD INLET		
THRUST BLOCK		
VALVE		
AIR INJECTION ASSEMBLY		
BLOW-OFF ASSEMBLY		
AIR RELEASE ASSEMBLY		
FIRE HYDRANT ASSEMBLY		
WATER METER		
PULL BOX/JUNCTION BOX		
UTILITY POLE		
GUY WIRE		
LIGHT POST		
MAILBOX		
SIGN		
BENCHMARK		
TREE DECIDUOUS		
TREE CONIFEROUS		
TREE TO BE REMOVED		
SURFACE ELEVATION	+ 176.63	+ 176.63

SECTION AND DETAIL DESIGNATIONS

SECTION DESIGNATIONS

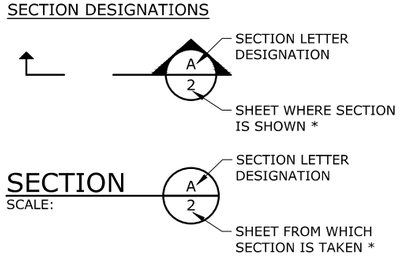

DETAIL DESIGNATIONS

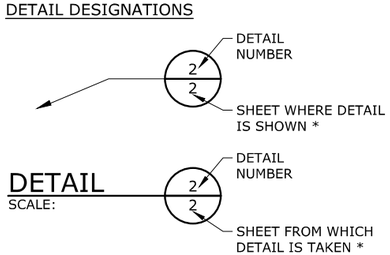

* NOTE: IF PLAN AND SECTION FOR DETAIL CALL-OUT AND DETAIL ARE SHOWN ON THE SAME DRAWING, DRAWING NUMBER IS REPLACED WITH A DASH.

MISCELLANEOUS PIPING SYMBOLS

	STRAINER
	SIGHT GLASS
	PRESSURE GAUGE W/ COCK
	PRESSURE SWITCH W/ COCK
M	METER
SP	SLIP-ON JOINT PIPE
R	RESTRAINED JOINT PIPE

NO.	DATE	REVISION	BY

SHEET G-3 3 of 10

DESIGNED: JRL
DRAWN: DKH
CHECKED: TPB
APPROVED: TPB

REGISTERED PROFESSIONAL ENGINEER 80898 OREGON JUSTIN RUSSELL LUCE MAY 22, 2018 RENEWS 12-31-18

SCALE VERT: AS SHOWN HORIZ: AS SHOWN

NOTICE 0 1 IF THIS BAR DOES NOT MEASURE 1" THEN DRAWING IS NOT TO SCALE

PROJECT NAME: CITY OF WEST LINN SOUTH FORK 24-INCH PIPE RESTRAINT PROJECT NO. PW-18-01

SHEET TITLE: SYMBOLS AND LEGEND

murraysmith

PROJECT: 18-2161.202 DATE: JUNE 2018

G:\PDX_Projects\18\2161 - West Linn South Fork 24 Inch Pipe Restraint\CAD\Sheets\18-2161-OR-G.dwg G-3 5/31/2018 4:09 PM DKH 21.0s (LMS Tech)

GENERAL NOTES

1. THE CONTRACTOR SHALL POTHOLE AND VERIFY LOCATIONS, ELEVATIONS, TYPES AND SIZES OF ALL EXISTING UTILITIES PRIOR TO CONSTRUCTING NEW PIPING FAR ENOUGH IN ADVANCE TO ALLOW NECESSARY ADJUSTMENTS IN GRADE AND SHALL NOTIFY ENGINEER OF NEED TO ADJUST PIPING INSTALLATION ACCORDINGLY. POTHOLING SHALL SUFFICIENTLY PRECEDE LAYING OF PIPE TO ALLOW REQUIRED ELEVATION ADJUSTMENTS TO BE ACCOMPLISHED WITHOUT REWORK. ELEVATION ADJUSTMENTS SHALL BE EXPECTED AND ARE INCIDENTAL TO THE WORK. DEFLECT PIPE AS REQUIRED AND WITHIN MANUFACTURER'S TOLERANCES TO AVOID EXISTING UTILITIES AND COMPLETE TIE-INS.

2. CONTRACTOR SHALL APPLY FOR AND OBTAIN RIGHT-OF-WAY (ROW) STREET PERMITS FROM THE CITY OF OREGON CITY BEFORE BEGINNING CONSTRUCTION WORK WITHIN THE ROW. CONTRACTOR SHALL INCLUDE TRAFFIC CONTROL AND TRAFFIC DETOUR PLANS, AND SITE PLAN WITH PERMIT APPLICATIONS TO THE CITY OF OREGON CITY FOR REVIEW.

3. BACKFILL AND SURFACING REQUIREMENTS ARE IDENTIFIED ON THE DRAWINGS. SEE SPECIFICATIONS AND STANDARD WEST LINN DETAIL WL-200. BACKFILL FOR PIPE TRENCHES UNDER PAVED AREAS SHALL BE CLASS B.

4. ALL CONCRETE SHALL BE A MINIMUM OF 3000 PSI STRENGTH.

5. LOCATIONS OF EXISTING UTILITIES ARE BASED ON INFORMATION SUPPLIED BY THE UTILITIES AND CONSIDERED APPROXIMATELY ONLY. AS REQUIRED BY STATE LAW, THE CONTRACTOR SHALL OBTAIN UTILITY LOCATES PRIOR TO COMMENCING CONSTRUCTION, CONTACT UTILITIES PRIOR TO CONSTRUCTION AND COMPLY WITH PROVISIONS OF ORS 757.541 TO 757.571.

6. RESTRAIN ALL VALVES, TEES, BENDS, AND FITTINGS UNLESS OTHERWISE NOTED.

7. ALL FLANGE CONNECTIONS TO BE PROVIDED WITH FULL-FACE GASKETS.

8. PROVIDE POLYETHYLENE ENCASEMENT FOR ALL PIPING WITHIN TEN (10) FEET OF EXISTING GAS MAIN ACCORDING TO ANSI/AWWA C105/A21.5.

9. CONTRACTOR TO LEAVE EXPOSED AND INSPECT WITH OWNER/ENGINEER ALL PIPE CLOSURE LOCATIONS, RESTRAINED EXISTING JOINTS AND EXPLORATORY CUT-IN RECONNECTION, UNDER NORMAL OPERATING PRESSURE PRIOR TO BACKFILLING. ANY LEAKS OBSERVED SHALL BE REPAIRED AT THE CONTRACTOR'S EXPENSE.

10. UNLESS NOTED ON THE DRAWINGS OR SPECIFIED OTHERWISE, ALL WORK IS TO BE CONSTRUCTED IN ACCORDANCE WITH THE MOST RECENT VERSION OF CITY OF WEST LINN STANDARDS AND THE OREGON ADMINISTRATIVE RULES (OAR), CHAPTER 333.

11. COMPLY WITH OAR CHAPTER 333 RULES FOR REQUIRED WATERLINE - SEWERLINE SEPARATION AND CROSSING REQUIREMENTS.

12. CONTRACTOR SHALL PROVIDE TEMPORARY BLOW-OFFS AND THRUST BLOCKING AS REQUIRED TO FACILITATE FLUSHING, TESTING, AND DISINFECTION OF WATERLINES. AT COMPLETION OF DISINFECTION, REMOVE TEMPORARY BLOW-OFFS AND REPLACE WITH PERMANENT CONNECTIONS. TEMPORARY BLOW-OFFS SHALL BE CONSTRUCTED PER WEST LINN STANDARD DETAIL WL-404B.

13. CUT INTO EXISTING WATERLINE WILL REQUIRE TEMPORARY SHUTDOWNS OF EXISTING FACILITIES. THE CONTRACTOR SHALL COORDINATE THIS WORK WITH THE OWNER, PROVIDING A MINIMUM OF 72 HOURS ADVANCE NOTICE PRIOR TO PERFORMING CUT IN WORK. SEE SPECIFICATIONS FOR SEQUENCE OF CONSTRUCTION REQUIREMENTS. OPERATION OF VALVES SHALL BE BY CITY OF WEST LINN ONLY.

14. ALL STRUCTURES, LOTS, CURBS, SIDEWALKS, FENCES, WALLS, GUY WIRES, GUARDRAILS, PIPING AND UTILITIES DISTURBED DURING CONSTRUCTION SHALL BE RESTORED TO EXISTING CONDITION UNLESS OTHERWISE SPECIFIED.

15. CONTRACTOR TO COMPLY WITH OREGON CITY AND CLACKAMAS COUNTY PERMITS AND REQUIREMENTS FOR WORK IN, AND RESTORATION OF, COUNTY AND CITY PROPERTY AND ROADWAYS, RESPECTIVELY.

16. ALL PIPING SHALL HAVE A MINIMUM OF 3 FEET OF COVER FROM TOP OF PIPE TO STREET GRADE OR OTHER FINISHED GRADE, UNLESS OTHERWISE SHOWN OR APPROVED BY ENGINEER.

17. DO NOT REMOVE TREES (GREATER THAN 6" DIAMETER) UNLESS THEY HAVE BEEN PREVIOUSLY IDENTIFIED IN THE FIELD FOR REMOVAL PER ENGINEER.

18. FINAL LOCATIONS OF ALL VALVE BOXES SHALL BE FIELD LOCATED PER ENGINEER.

19. PROVIDE "AS CONSTRUCTED" DRAWINGS INDICATING ALL CHANGES IN GRADE, ALIGNMENT, FITTINGS AND MATERIALS INSTALLED AND ANY OTHER UTILITIES OR OBSTACLES NOT SO INDICATED ON THESE PLANS.

20. ELEVATIONS ARE BASED ON DOGAMI LIDAR - NORTH AMERICAN VERTICAL DATUM 1988 (NAVD88).

20. AT THE END OF EACH WORK DAY ALL OPEN TRENCHES SHALL BE BACKFILLED AND ALL TRENCHES WITHIN STREETS SHALL BE TEMPORARILY PAVED OR COVERED TO THE SATISFACTION OF THE ENGINEER.

21. IF ASBESTOS CEMENT PIPE IS ENCOUNTERED DURING CONSTRUCTION, REMOVE AND DISPOSE OF EXISTING ASBESTOS CEMENT PIPE FOR WATERLINE CONSTRUCTION ACCORDING TO STATE AND LOCAL REQUIREMENTS.

22. CONTRACTOR SHALL COMPLY WITH ALL OREGON DEPARTMENT OF ENVIRONMENTAL QUALITY (DEQ) REQUIREMENTS IN THE DISPOSAL OF SUPER CHLORINATED WATER. SEE TECHNICAL SPECIFICATIONS.

23. NO UNDERGROUND WORK SHALL BE "BURIED" UNTIL INSPECTED AND APPROVED BY THE ENGINEER.

24. CONTRACTOR SHALL SUBMIT A TRAFFIC CONTROL PLAN FOR WORK WITHIN CLACKAMAS COUNTY PUBLIC WORKS YARD TO THE OWNER FOR APPROVAL. A COPY OF THE APPROVED TRAFFIC CONTROL PLAN SHALL BE PROVIDED TO THE ENGINEER AND AVAILABLE AT THE WORK SITE. THE OWNER RESERVES THE RIGHT TO ADD TO OR MODIFY TRAFFIC CONTROL REQUIREMENTS AS MAY BE NECESSARY TO EFFECTIVELY CONTROL TRAFFIC AND TO ASSURE PUBLIC SAFETY.

25. CONTRACTOR SHALL PROTECT TRAFFIC AT ALL TIMES DURING CONSTRUCTION. CONTRACTOR SHALL ERECT AND MAINTAIN BARRICADES, WARNING SIGNS, TRAFFIC CONES PER OWNER REQUIREMENTS IN ACCORDANCE WITH MUTCD (INCLUDING OREGON SUPPLEMENTS). ALL TRAFFIC CONTROL MEASURES SHALL BE APPROVED AND IN PLACE PRIOR TO ANY CONSTRUCTION ACTIVITY.

26. SAWCUTTING OF EXISTING SURFACES, WHICH INCLUDES ASPHALTIC CONCRETE AND CONCRETE SURFACES, SHALL BE CONSIDERED INCIDENTAL AND INCLUDED IN THE UNIT PRICES OF THE BID.

NO.	DATE	REVISION	BY

DESIGNED: JRL
DRAWN: DKH
CHECKED: TPB
APPROVED: TPB

SHEET G-4
4 of 10

REGISTERED PROFESSIONAL ENGINEER 80598 OREGON
JUSTIN RUSSELL LUCE
MAY 29, 2018
RENEWS 12-31-18

SCALE
VERT: AS SHOWN
HORIZ: AS SHOWN
NOTICE
0 1
IF THIS BAR DOES NOT MEASURE 1" THEN DRAWING IS NOT TO SCALE

PROJECT NAME:
CITY OF WEST LINN
SOUTH FORK 24-INCH PIPE RESTRAINT
PROJECT NO. PW-18-01

SHEET TITLE:
GENERAL NOTES

murraysmith

PROJECT: 18-2161.202
DATE: JUNE 2018

G:\PDX_Projects\18\2161 - West Linn South Fork 24 Inch Pipe Restraint\CAD\Sheets\18-2161-OR-G.dwg G-4 5/31/2018 4:09 PM DKH 21.0s (LMS Tech)

PLAN
SCALE: 1"=100'

NO.	DATE	REVISION	BY

DESIGNED: JRL
DRAWN: DKH
CHECKED: TPB
APPROVED: TPB

SHEET G-5 5 of 10

REGISTERED PROFESSIONAL ENGINEER 80998 OREGON JUSTIN RUSSELL LUCE MAY 23, 2018
RENEWS 12-31-18

SCALE
VERT: AS SHOWN
HORIZ: AS SHOWN
NOTICE
0 1
IF THIS BAR DOES NOT MEASURE 1" THEN DRAWING IS NOT TO SCALE

PROJECT NAME:
CITY OF WEST LINN
SOUTH FORK 24-INCH PIPE RESTRAINT
PROJECT NO. PW-18-01

SHEET TITLE:
PROJECT OVERVIEW
AND DISINFECTION PLAN

murraysmith

PROJECT: 18-2161.202
DATE: JUNE 2018

G:\PDX_Projects\18\2161 - West Linn South Fork 24 Inch Pipe Restraint\CAD\Sheets\18-2161-OR-G.dwg G-5 5/31/2018 4:09 PM DKH 21.0s (LMS Tech)

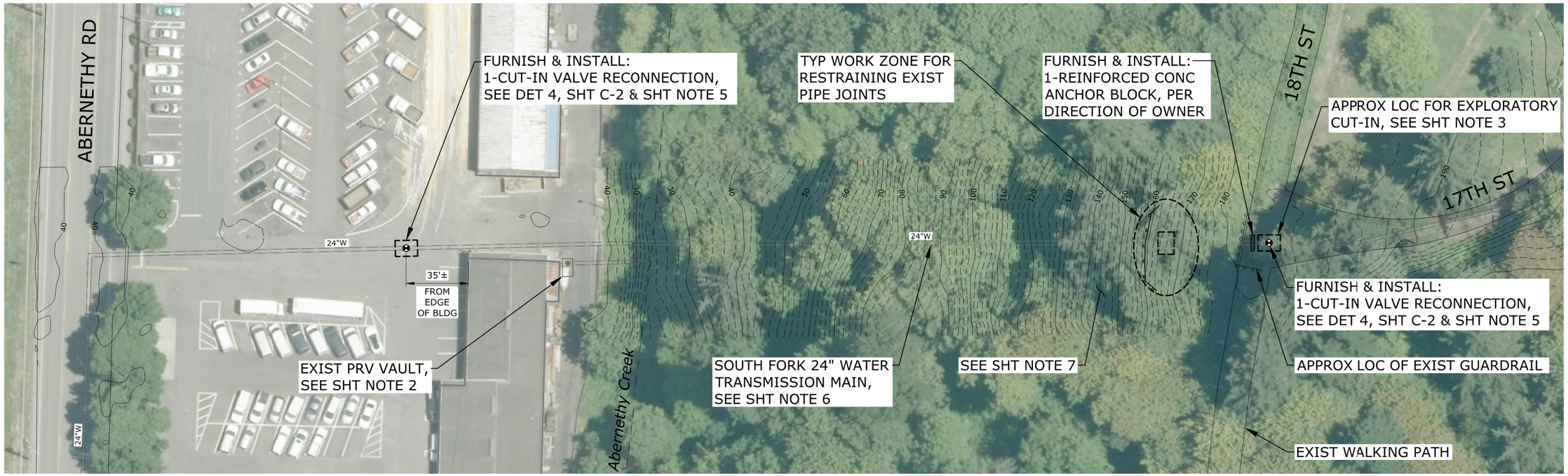

PLAN
SCALE: 1"=30'

EROSION CONTROL NOTES

1. CONTRACTOR SHALL FURNISH AND INSTALL EROSION AND SEDIMENTATION CONTROL MEASURES IN ACCORDANCE WITH THE CITY OF WEST LINN "EROSION PREVENTION AND SEDIMENT CONTROL - PLANNING AND DESIGN MANUAL", REVISION DECEMBER 2008.

2. THE IMPLEMENTATION OF THE EROSION AND SEDIMENTATION CONTROL PLAN, MEASURES AND THE CONSTRUCTION, MAINTENANCE, REPLACEMENT AND UPGRADING OF THESE FACILITIES IS THE SOLE RESPONSIBILITY OF THE CONTRACTOR UNTIL ALL CONSTRUCTION IS COMPLETED AND APPROVED AND VEGETATION/ LANDSCAPING IS ESTABLISHED.

3. THE CONTRACTOR IS SOLELY RESPONSIBLE FOR PROTECTION OF ALL WORK, ADJACENT PROPERTIES AND DOWNSTREAM FACILITIES FROM EROSION AND SILTATION DURING THE COURSE OF THE WORK. ANY DAMAGE RESULTING FROM SUCH EROSION AND SILTATION SHALL BE CORRECTED AT THE SOLE EXPENSE OF THE CONTRACTOR.

4. THE EROSION AND SEDIMENTATION CONTROL FACILITIES SHOWN ON THE PLANS PRESENT BASIC CONCEPTS ONLY AND ARE FOR INFORMATIONAL PURPOSES ONLY.

5. THE FOLLOWING REFERENCED DETAILS ARE FROM THE ABOVE REFERENCED PLANNING AND DESIGN MANUAL:

A. SEDIMENT FENCE - DETAIL DRAWING 4-23

EROSION CONTROL LEGEND

SEDIMENT FENCING

SHEET NOTES:

1. MAXIMUM ALLOWABLE SHUTDOWN TIME FOR EXISTING 24" POTABLE WATER TRANSMISSION MAIN SHALL BE 30 CALENDAR DAYS. SEE SPECIFICATION SECTION 01 12 16 - WORK SEQUENCE, FOR ADDITIONAL REQUIREMENTS REGARDING WORK SEQUENCE AND CONSTRAINTS.

2. CONTRACTOR TO COORDINATE WITH CITY PER SPECIFICATIONS TO SHUT DOWN, DRAIN AND DECHLORINATE 24" PIPELINE THROUGH EXISTING PRV VAULT DRAIN PIPING LOCATED ADJACENT TO ABERNETHY CREEK PRIOR TO PIPE CUT-INS.

3. AFTER PIPELINE HAS BEEN DRAINED, CONTRACTOR TO REMOVE A SECTION OF EXISTING 24" STEEL PIPELINE AND PERFORM CCTV INSPECTION OF PIPE INTERIOR TO LOCATE EXISTING STEEL PIPE JOINTS AND DOCUMENT CONDITION OF EACH JOINT. LIMITS OF PIPELINE INSPECTION SHALL BE FROM EXPLORATORY CUT-IN LOCATION TO ABERNATHY CREEK. CONTRACTOR TO MARK EXISTING JOINT LOCATIONS IN THE FIELD AND PROVIDE CCTV DATA TO OWNER AND ENGINEER FOR REVIEW. ONCE PROPOSED RESTRAINT METHODS HAVE BEEN CONFIRMED, CONTRACTOR TO INSTALL CUT-IN VALVE AND RESTORE PIPELINE AT EXPLORATORY CUT-IN LOCATION, PER DETAIL 4, SHEET C-2.

4. AFTER EXISTING PIPE JOINTS HAVE BEEN LOCATED PER NOTE 3, CONTRACTOR TO EXCAVATE LOCATIONS AND RESTRAIN JOINTS PER DETAILS 1 THROUGH 3, SHEET C-2. RESTRAINT METHOD TO BE APPROVED BY OWNER AND ENGINEER FOR EACH JOINT. IT IS ANTICIPATED THAT EXISTING PIPE JOINTS WILL REQUIRE HAND DIGGING DUE TO STEEP GRADE OF SLOPE. EROSION CONTROL SEDIMENT FENCING SHOWN FOR TYPICAL WORK ZONE ON SLOPE IS A MINIMUM REQUIREMENT. SEE EROSION CONTROL NOTES AND SPECIFICATIONS FOR ADDITIONAL INFORMATION.

5. CONTRACTOR TO PROVIDE SHORING FOR CUT-IN VALVE CONNECTIONS TO LIMIT SIZE OF PITS AND DISTURBANCE AREAS TO EXISTING ASPHALT.

6. ORIGINAL PLANS FOR 24" WATER MAIN INCLUDED IN APPENDIX D, SUPPLEMENTARY INFORMATION

7. BASEMAPPING SHOWN WAS DEVELOPED FROM EXISTING GEOGRAPHIC INFORMATION SYSTEM (GIS) DATA, WATERLINE AS-BUILT INFORMATION, AND FIELD OBSERVATIONS. NO TOPOGRAPHICAL SURVEY WAS PERFORMED AS PART OF THE PROJECT DESIGN. CONTRACTOR SHALL BE AWARE THAT CONSTRUCTION WORK AREA ON SLOPE ABOVE ABERNETHY CREEK IS A DENSELY VEGETATED NATURAL GREEN SPACE. EXISTING TREES ARE NOT SHOWN AND SHALL BE PROTECTED BY CONTRACTOR DURING WORK.

NO.	DATE	REVISION	BY

DESIGNED: JRL
DRAWN: DKH
CHECKED: TPB
APPROVED: TPB

SHEET C-1
6 of 10

REGISTERED PROFESSIONAL ENGINEER 80998 OREGON
JUSTIN RUSSELL LUCE
May 23, 2018
RENEWS: 12-31-18

SCALE
VERT: AS SHOWN
HORIZ: AS SHOWN
NOTICE
0 1
IF THIS BAR DOES NOT MEASURE 1" THEN DRAWING IS NOT TO SCALE

PROJECT NAME:
CITY OF WEST LINN
SOUTH FORK 24-INCH PIPE RESTRAINT
PROJECT NO. PW-18-01

SHEET TITLE:
SITE PLAN AND EROSION CONTROL PLAN

murraysmith

PROJECT: 18-2161.202
DATE: JUNE 2018

G:\PDX_Projects\18\2161 - West Linn South Fork 24 Inch Pipe Restraint\CAD\Sheets\18-2161-OR-C.dwg C-1 5/31/2018 4:33 PM DKH 21.0s (LMS Tech)

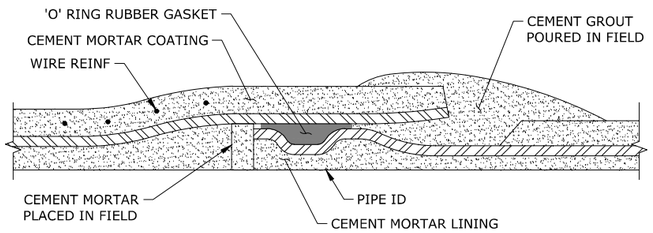

NOTES:

1. EXISTING JOINT DETAIL PROVIDED FOR INFORMATIONAL PURPOSES. CONTRACTOR TO CONFIRM EXISTING PIPELINE DIMENSIONS BEFORE ORDERING MATERIALS. ORIGINAL JOINT DETAIL INCLUDED IN EXISTING 24" SUPPLY LINE PLANS (1972). SEE APPENDIX D, SUPPLEMENTARY INFORMATION, FOR ORIGINAL PLANS.

EXISTING ROLLED-GROOVE STEEL PIPE JOINT

SCALE: NTS

1 / -

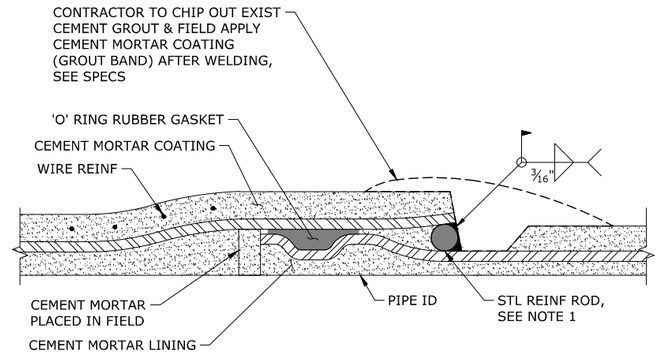

NOTES:

1. STEEL REINFORCING ROD SHALL CONFORM TO ASTM A615, GRADE 40 MINIMUM, OR ASTM A36. ROD SHALL BE SIZED AS REQUIRED TO COMPLETE JOINT RESTRAINT AS SHOWN.

JOINT RESTRAINT W/ REINFORCING ROD

SCALE: NTS

2 / -

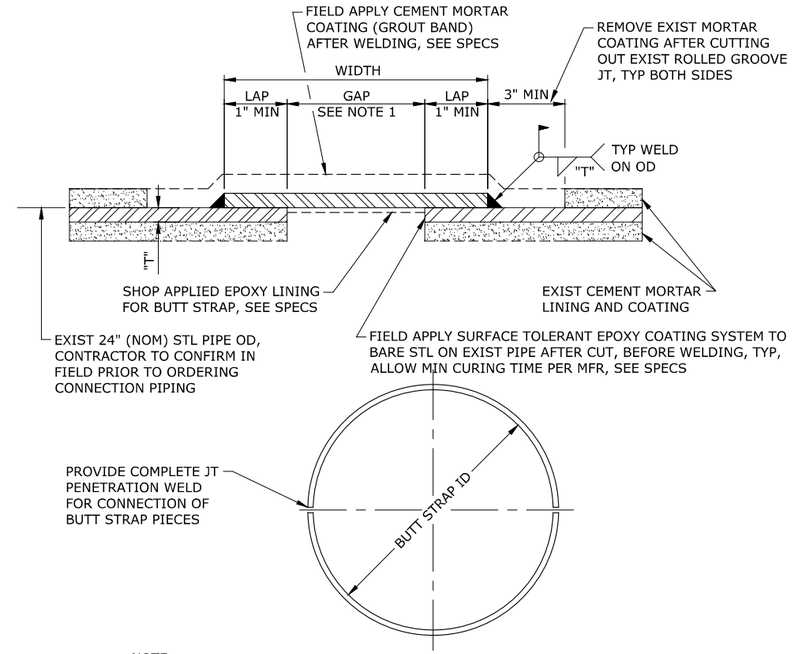

NOTE:

1. GAP WIDTH AS REQUIRED TO CUT OUT EXISTING ROLLED-GROOVE STEEL PIPE JOINT.

JOINT RESTRAINT WITH BUTT STRAP

SCALE: NTS

3 / -

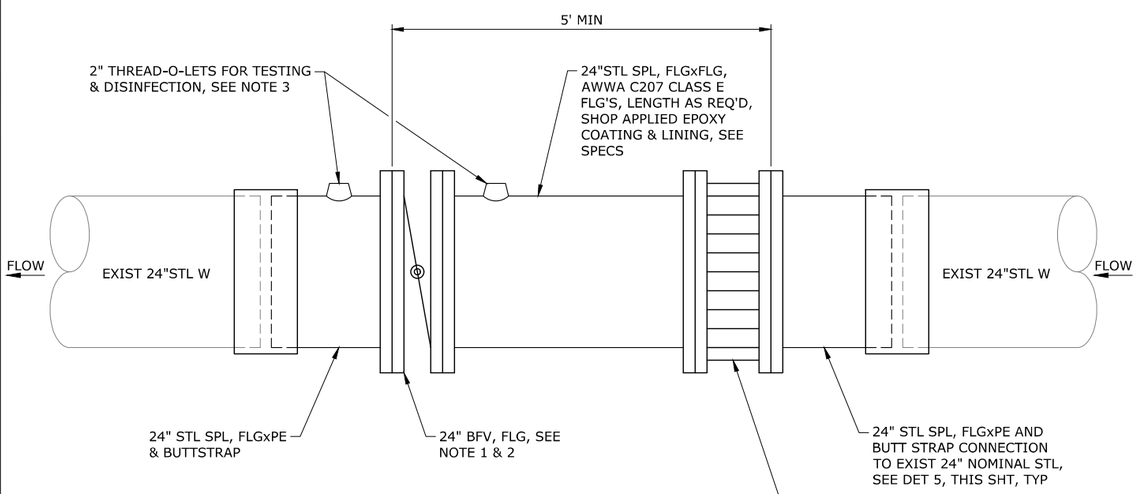

NOTES:

1. BUTTERFLY VALVE SHALL BE CLASS 250B PER AWWA C504, FBE COATED AND LINED, WITH DUCTILE IRON BODY AND CLASS 125 FLANGES PER ANSI B16.1 TO MATCH DIMENSIONS OF CONNECTING CLASS E STEEL FLANGES.

2. WRAP DISMANTLING JOINT AND BUTTERFLY VALVE WITH TWO LAYERS OF 8 MIL POLY WRAP AND ATTACH TO ADJACENT PIPE WITH POLYETHYLENE BACKED TAPE PRIOR TO BACKFILLING.

3. CONTRACTOR TO PROVIDE TEMPORARY PIPING AND VALVES AS REQUIRED TO CONNECT TO THREAD-O-LETS TO COMPLETE HYDROSTATIC TESTING AND DISINFECTION PER SECTION 33 13 00. AFTER TESTING AND DISINFECTION HAS BEEN SUCCESSFULLY COMPLETED, CONTRACTOR TO PLUG, SEAL WELD, AND REPAIR PIPELINE COATING AS REQUIRED.

CUT-IN VALVE RECONNECTION

SCALE: 1"=1'-0"

4 / -

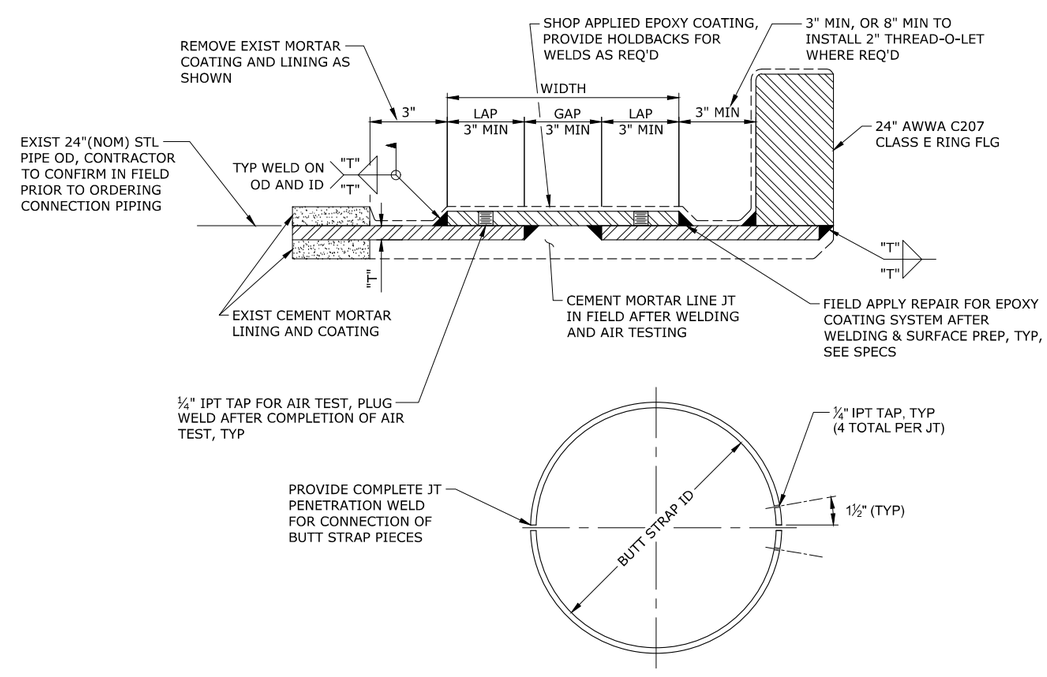

BUTT STRAP JOINT (CONNECTION TO EXISTING)

SCALE: NTS

5 / -

NO.	DATE	REVISION	BY

SHEET C-2 7 of 10

DESIGNED: JRL
DRAWN: MBE
CHECKED: TPB
APPROVED: TPB

REGISTERED PROFESSIONAL ENGINEER 80898 JUSTIN RUSSELL LUCE OREGON MAY 22, 2018 RENEWS 12-31-18

SCALE VERT: AS SHOWN HORIZ: AS SHOWN

NOTICE 0 1 IF THIS BAR DOES NOT MEASURE 1" THEN DRAWING IS NOT TO SCALE

PROJECT NAME: CITY OF WEST LINN SOUTH FORK 24-INCH PIPE RESTRAINT PROJECT NO. PW-18-01

SHEET TITLE: MISCELLANEOUS CIVIL DETAILS - 1

murraysmith

PROJECT: 18-2161.202 DATE: JUNE 2018

G:\PDX_Projects\18\2161 - West Linn South Fork 24 Inch Pipe Restraint\CAD\Sheets\18-2161-OR-C.dwg C-2 5/31/2018 4:33 PM DKH 21.0s (LMS Tech)

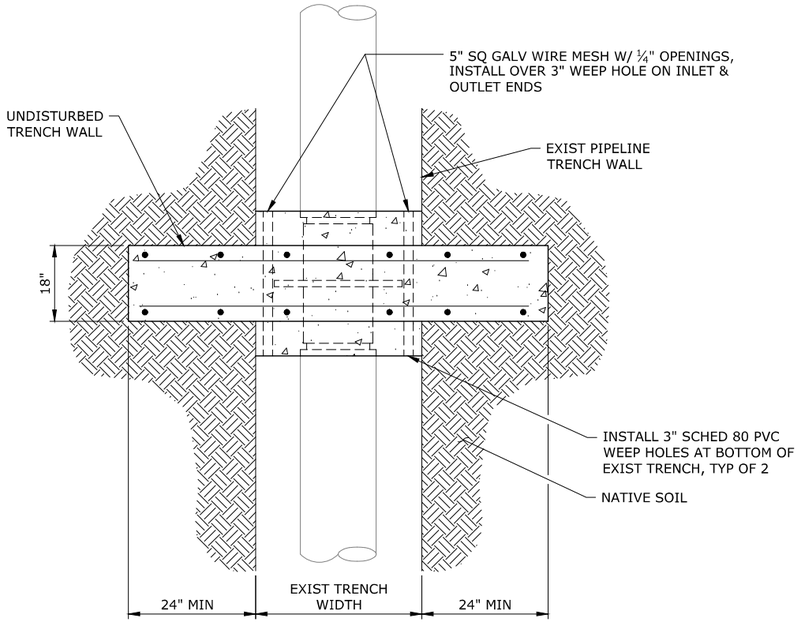

PLAN

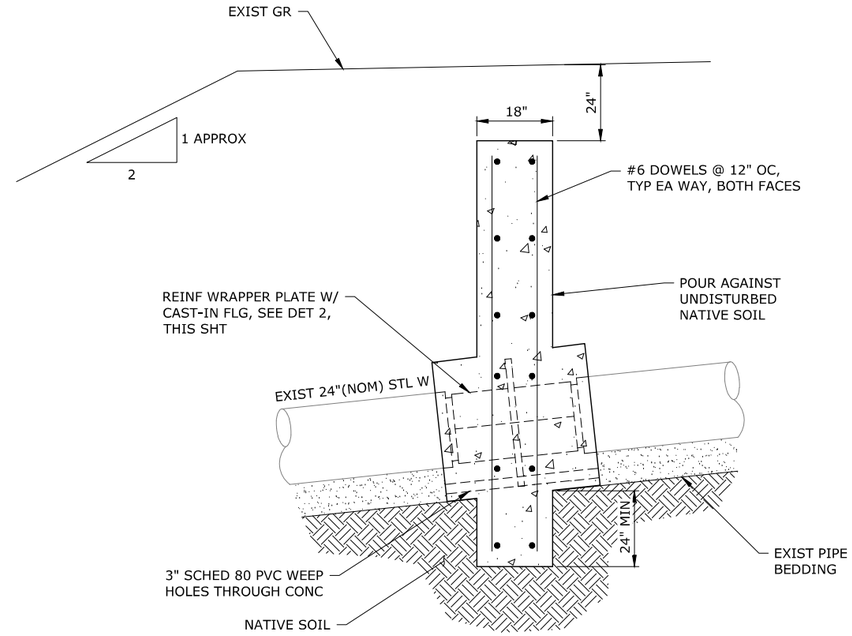

ELEVATION

NOTES:

1. CONCRETE ANCHOR BLOCKS SHALL BE CONSTRUCTED USING FORMS AS REQUIRED. REMOVE FORMS AFTER CONCRETE HAS SUFFICIENTLY CURED AND THEN BACKFILL.

2. ALL CONCRETE SHALL BE COMMERCIAL GRADE CONCRETE, 3000 PSI COMPRESSIVE STRENGTH OR GREATER.

3. CONFIRM EXISTING OUTSIDE DIAMETER OF 24" NOMINAL STEEL PIPELINE PRIOR TO ORDERING REINFORCING WRAPPER PLATE WITH CAST-IN FLANGE. ALL BARE STEEL SHALL BE FULLY ENCASED IN CONCRETE AS SHOWN.

4. FURNISH & INSTALL FILTER FABRIC ON 5" SQUARE WIRE MESH INLET COVER PRIOR TO INSTALLING INLET COVER OVER 3" WEEPHOLES' ENDS. FILTER FABRIC SHALL BE MIRAFI 140N, OR APPROVED EQUAL.

5. REINFORCED CONCRETE ANCHOR BLOCK TO BE CONSTRUCTED ONLY IF DIRECTED BY OWNER. SEE SECTION 01 12 16, WORK SEQUENCE FOR ADDITIONAL INFORMATION.

REINFORCED CONCRETE ANCHOR BLOCK (1 / C-1)

SCALE: NTS

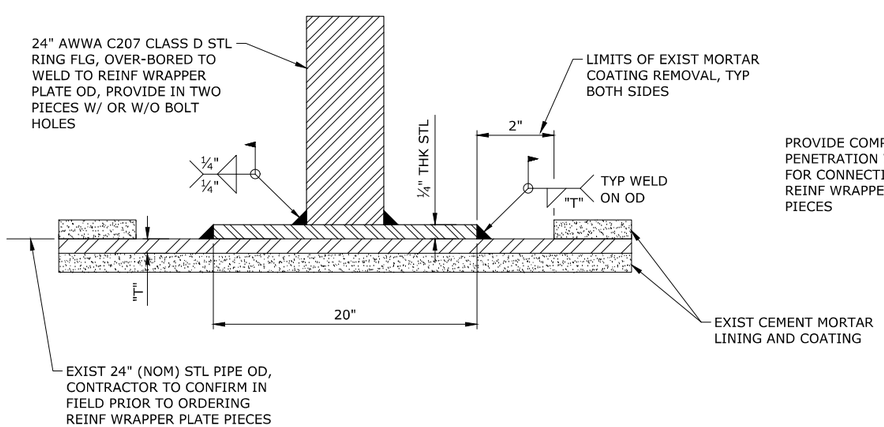

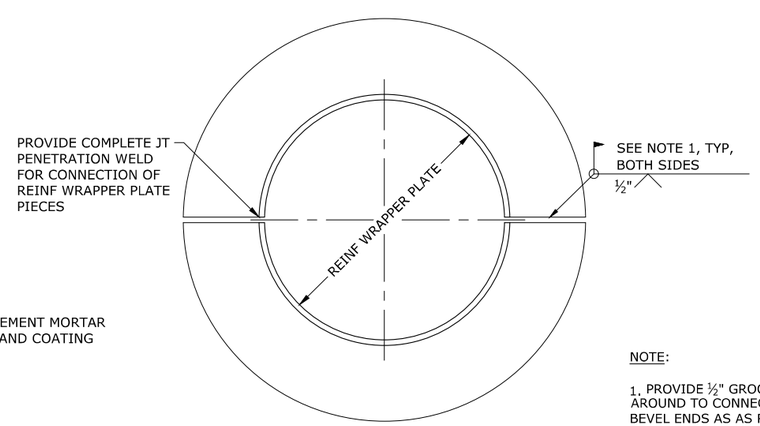

NOTE:

1. PROVIDE ½" GROOVE SEAL WELD ALL AROUND TO CONNECT FLANGE HALVES. BEVEL ENDS AS AS REQUIRED TO COMPLETE WELD PENETRATION DEPTH SPECIFIED.

REINFORCING WRAPPER PLATE WITH CAST-IN FLANGE (2 / -)

SCALE: NTS

NO.	DATE	REVISION	BY

DESIGNED: JRL
DRAWN: MBE
CHECKED: TPB
APPROVED: TPB

SHEET C-3 8 of 10

REGISTERED PROFESSIONAL ENGINEER 80898 OREGON — JUSTIN RUSSELL LUCE — MAY 29, 2018 — RENEWS 12-31-18

SCALE: VERT: AS SHOWN; HORIZ: AS SHOWN

NOTICE: 0 — 1 IF THIS BAR DOES NOT MEASURE 1" THEN DRAWING IS NOT TO SCALE

PROJECT NAME: CITY OF WEST LINN SOUTH FORK 24-INCH PIPE RESTRAINT PROJECT NO. PW-18-01

SHEET TITLE: MISCELLANEOUS CIVIL DETAILS - 2

murraysmith

PROJECT: 18-2161.202 DATE: JUNE 2018

G:\PDX_Projects\18\2161 - West Linn South Fork 24 Inch Pipe Restraint\CAD\Sheets\18-2161-OR-C.dwg C-3 5/31/2018 4:33 PM DKH 21.0s (LMS Tech)

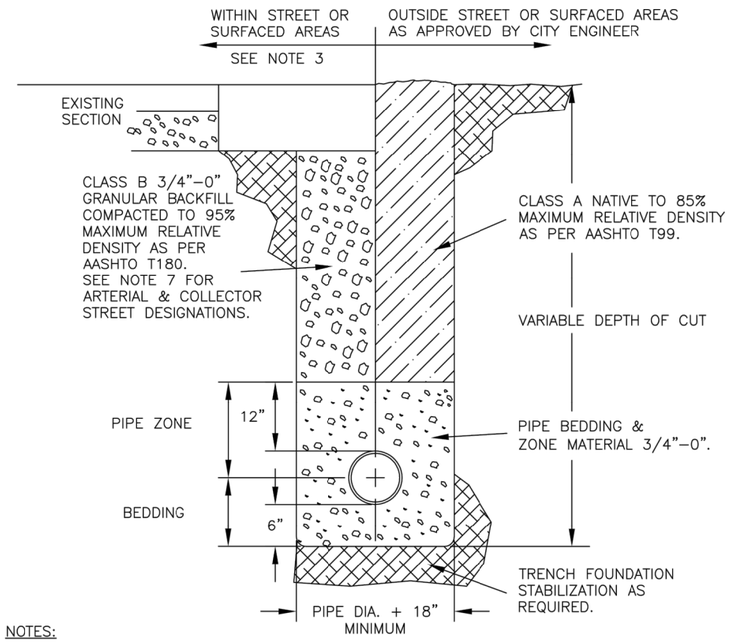

NOTES:

1. ALL CUTS IN PAVEMENT SHALL BE SAW CUT.
2. ALL PAVEMENT PATCH JOINTS AND ALL CUT EDGES SHALL BE SAND SEALED PER ODOT SPECS AND OREGON CITY SPECIAL PROVISIONS SEC–00744.51.
3. REFER TO OREGON CITY PAVEMENT CUT STANDARDS AND STANDARD DETAIL DRAWINGS 532, 533 & 534.
4. THIS TRENCH BACKFILL REQUIREMENT APPLIES TO ALL UNDERGROUND CONDUITS.
5. CLASS "B" BACKFILL SHALL EXTEND 3 FEET BEYOND EDGE OF STREET OR SURFACED AREA.
6. BACKFILL SHALL BE PLACED AND COMPACTED IN A MAX. OF 24–INCH LIFTS. COMPACTION TESTING REQUIRED AT A FREQUENCY OF 1 TEST EVERY 100 FEET OF TRENCH MINIMUM.
7. EXISTING ARTERIAL & COLLECTOR STREET DESIGNATIONS REQUIRE CLSM (aka CDF) PER ODOT STANDARDS, SEC–00442 FOR ALL TRENCH TRANSVERSE OR PERPENDICULAR CROSSINGS OF VEHICLE TRAVEL LANES.

DRAWN K.A.E.			City of Oregon City Public Works Standard Drawings	SCALE N.T.S.
ENGR. A.F.G.				DATE APRIL 2017
REV.	DATE	APPR.	PIPE BEDDING AND TRENCH BACKFILL - STORM & SANITARY SEWER & WATER PIPE	APPR. AFG
				DRAWING NO. 313

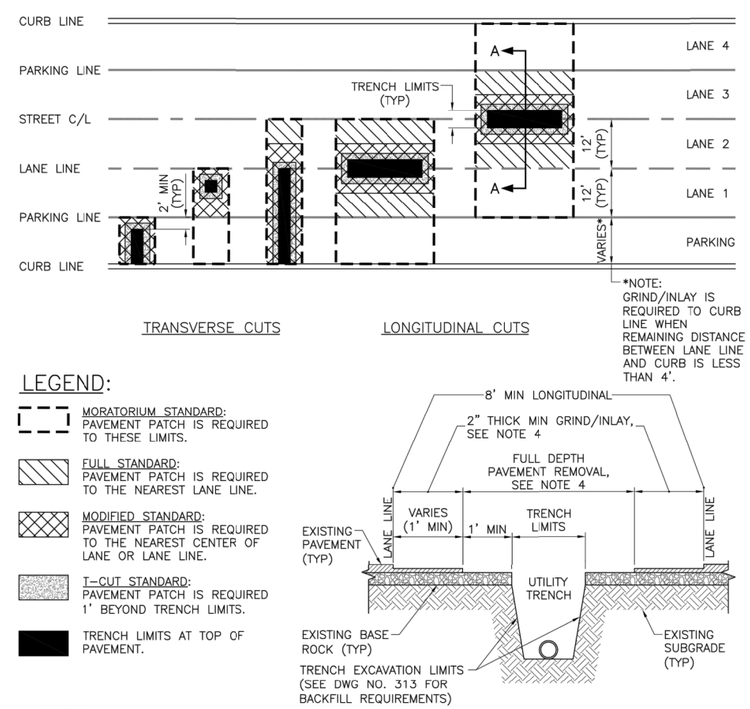

LEGEND:

- MORATORIUM STANDARD: PAVEMENT PATCH IS REQUIRED TO THESE LIMITS.
- FULL STANDARD: PAVEMENT PATCH IS REQUIRED TO THE NEAREST LANE LINE.
- MODIFIED STANDARD: PAVEMENT PATCH IS REQUIRED TO THE NEAREST CENTER OF LANE OR LANE LINE.
- T–CUT STANDARD: PAVEMENT PATCH IS REQUIRED 1' BEYOND TRENCH LIMITS.
- TRENCH LIMITS AT TOP OF PAVEMENT.

SECTION A–A

NOTES:

1. ALL CUTS TO BE PERPENDICULAR/PARALLEL TO DIRECTION OF TRAVEL.
2. ALL PAVEMENT PATCH JOINTS AND ALL CUT EDGES SHALL BE SAND SEALED PER ODOT SPECS AND OREGON CITY SPECIAL PROVISIONS SEC–00744.51.
3. PAVEMENT REPLACEMENT IS REQUIRED TO THE NEXT ADJACENT CURB, PARKING, OR LANE LINE WHENEVER A TRENCH OR DISTURBANCE OF ASPHALT OR SUPPORT MATERIAL EXTENDS BEYOND SUCH LINE.
4. FOR STREETS WITH EXISTING AC THICKNESS OF LESS THAN 4 INCHES, COMPLETE FULL DEPTH AC REMOVAL TO PAVING LIMITS AND REPLACE WITH MINIMUM 4 INCHES OF AC.
5. RESURFACING TO BE A MINIMUM 4 INCHES, LEVEL 2, 1/2–INCH PG 64–22 ACP (IF ARTERIAL, LEVEL 3) OR MATCHING EXISTING, WHICHEVER IS GREATER.

DRAWN D.K.H.			City of Oregon City Public Works Standard Drawings	SCALE N.T.S.
ENGR. G.E.C.				DATE AUGUST 2012
REV.	DATE	APPR.	PAVEMENT CUT STANDARD, TYPICAL LAYOUT	APPR. JML
1	11/15	AFG		DWG. NO. 532

NO.	DATE	REVISION	BY

DESIGNED: JRL
DRAWN: MBE
CHECKED: TPB
APPROVED: TPB

REGISTERED PROFESSIONAL ENGINEER 80598 OREGON MAY 28, 2010 JUSTIN RUSSELL LUCE
RENEWS 12–31–18

SCALE VERT: AS SHOWN HORIZ: AS SHOWN
NOTICE 0 1 IF THIS BAR DOES NOT MEASURE 1" THEN DRAWING IS NOT TO SCALE

PROJECT NAME: CITY OF WEST LINN SOUTH FORK 24-INCH PIPE RESTRAINT PROJECT NO. PW-18-01

SHEET TITLE: MISCELLANEOUS CIVIL DETAILS - 3

SHEET C-4 9 of 10

murraysmith

PROJECT: 18-2161.202 DATE: JUNE 2018

G:\PDX_Projects\18\2161 - West Linn South Fork 24 Inch Pipe Restraint\CAD\Sheets\18-2161-OR-C.dwg C-4 5/31/2018 4:33 PM DKH 21.0s (LMS Tech)

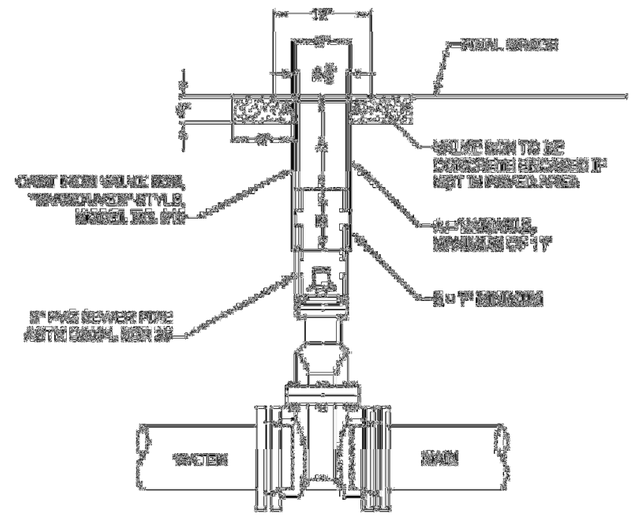

NOTES:

1. VALVE BOXES SHALL BE CENTERED DIRECTLY OVER THE VALVE NUT IN A VERTICAL POSITION.
2. VALVE BOX TOP SHALL BE ADJUSTED TO MEET FINISHED GRADE.
3. PVC SHALL BE SDR35 CONTINUOUS PRESSED RIBLOK OR COUPLERS.
4. ON VALVES 8" AND LARGER, PVC SHALL BE INSTALLED OVER VALVE PACKING WITH PVC BOXES ON SURFACE.

STANDARD VALVE BOX DETAIL

West Linn

DATE: 2018
DRAWING NO.: WL-S1
SHEET:

NO.	DATE	REVISION	BY

REGISTERED PROFESSIONAL ENGINEER 80898 OREGON JUSTIN RUSSELL LUCE MAY 28, 2018
RENEWS 12-31-18

DESIGNED: JRL
DRAWN: MBE
CHECKED: TPB
APPROVED: TPB

SHEET C-5
10 of 10

SCALE VERT: AS SHOWN HORIZ: AS SHOWN
NOTICE 0 1 IF THIS BAR DOES NOT MEASURE 1" THEN DRAWING IS NOT TO SCALE

PROJECT NAME: CITY OF WEST LINN SOUTH FORK 24-INCH PIPE RESTRAINT PROJECT NO. PW-18-01

SHEET TITLE: MISCELLANEOUS CIVIL DETAILS - 4

murraysmith

PROJECT: 18-2161.202 DATE: JUNE 2018

G:\PDX_Projects\18\2161 - West Linn South Fork 24 Inch Pipe Restraint\CAD\Sheets\18-2161-OR-C.dwg C-5 5/31/2018 4:33 PM DKH 21.0s (LMS Tech)

Public Works Department
22500 Salamo Road
West Linn, Oregon 97068
Telephone: (503) 722-5500
Fax: (503) 656-4106

Appendix D

SUPPLEMENTARY INFORMATION

APPENDIX D – SUPPLEMENTARY INFORMATION

TABLE OF CONTENTS

A. Existing drawings, "City of West Linn, Oregon - Water Improvement Phase I; 24" Supply Line," (1972).

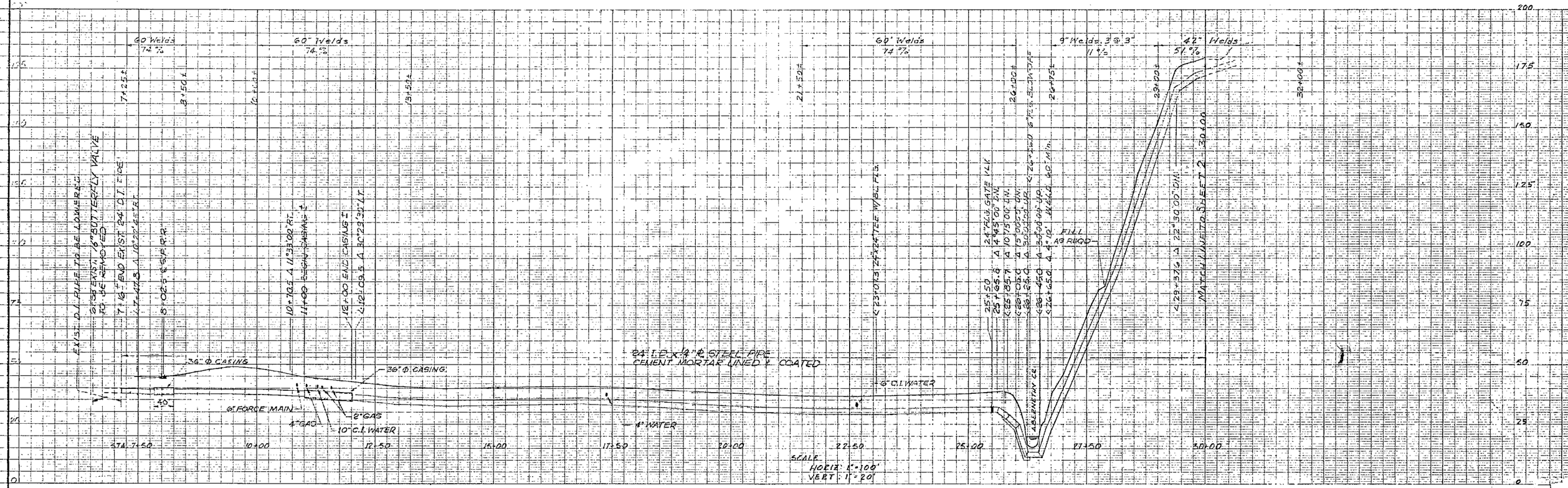

FABRICATED BENDS

STATION	DEGREE	TYPE
L 7+47.8	RT. 10°22'45" HORIZ.	1-CUT
L 10+70.5	RT. 11°33'00" HORIZ.	1-CUT
L 12+09.5	LT. 30°25'30" HORIZ.	2-CUT
L 23+07.3	RT. 88°18'30" HORIZ.	TEE
L 25+85.7	DN. 10°15'00" VERT.	1-CUT
L 26+05.0	DN. 15°00'00" VERT.	1-CUT
L 26+25.0	UP 30°00'00" VERT.	1-CUT
L 26+45.0	UP 30°00'00" VERT.	1-CUT
L 29+37.6	DN. 22°30'00" VERT.	1-CUT

ANGLES WITHIN ALLOWABLE JOINT DEFLECTION, (4° 46') NOT 1-CUT BENDS.

NOTES & LEGEND

- 24" WATER LINE THIS CONTRACT
- BURIED TELEPHONE CABLE
- 24" Ø WATER LINE, EXISTING
- WATER LINE, CITY OF OREGON CITY
- GAS LINE, NORTHWEST NATURAL GAS
- SEWAGE FORCE MAIN, CLACK. CO. HOUSING AUTH.
- GRAVITY SEWERS

EXISTING UNDERGROUND PIPING LOCATIONS APPROXIMATE & POSSIBLY INCOMPLETE. NOTIFY ALL AGENCIES INVOLVED 10 DAYS PRIOR TO EXCAVATION. VERIFY LOCATIONS IN THE FIELD PRIOR TO COMMENCEMENT OF WORK.

- AIR RELEASE / VACUUM VALVE
- BLOW-OFF VALVE
- SWEGE VALVE
- FIRE HYDRANT

SCALE: 1"=100'

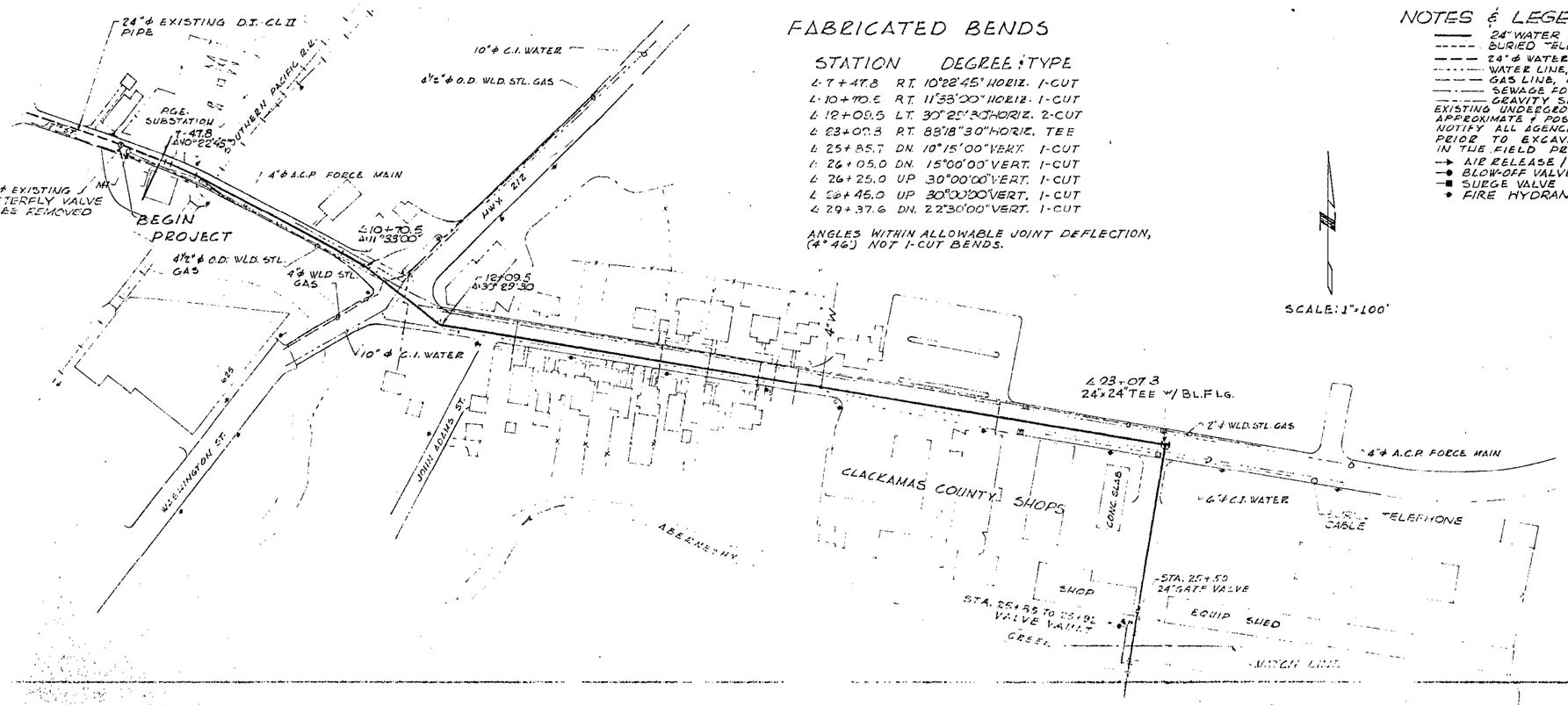

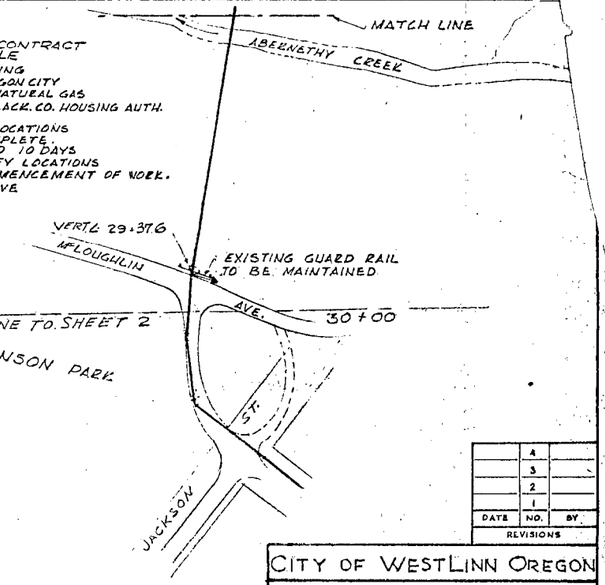

DATE	NO.	BY
	4	
	3	
	2	
	1	

REVISIONS

CITY OF WESTLINN OREGON

WATER IMPROVEMENT PHASE 1 24" SUPPLY LINE PLAN/PROFILE

STA. 6+58 (BEGIN PROJECT) TO STA. 30+00

SCALE: AS SHOWN

JOHN W. CUNNINGHAM & ASSOCIATES
CONSULTING ENGINEERS — PORTLAND, OREGON

DESIGN	HSB-JHG	DATE FEB. '72	P	797-A-5
DRAWN	JHG	NO. 1 OF 4	E	5095

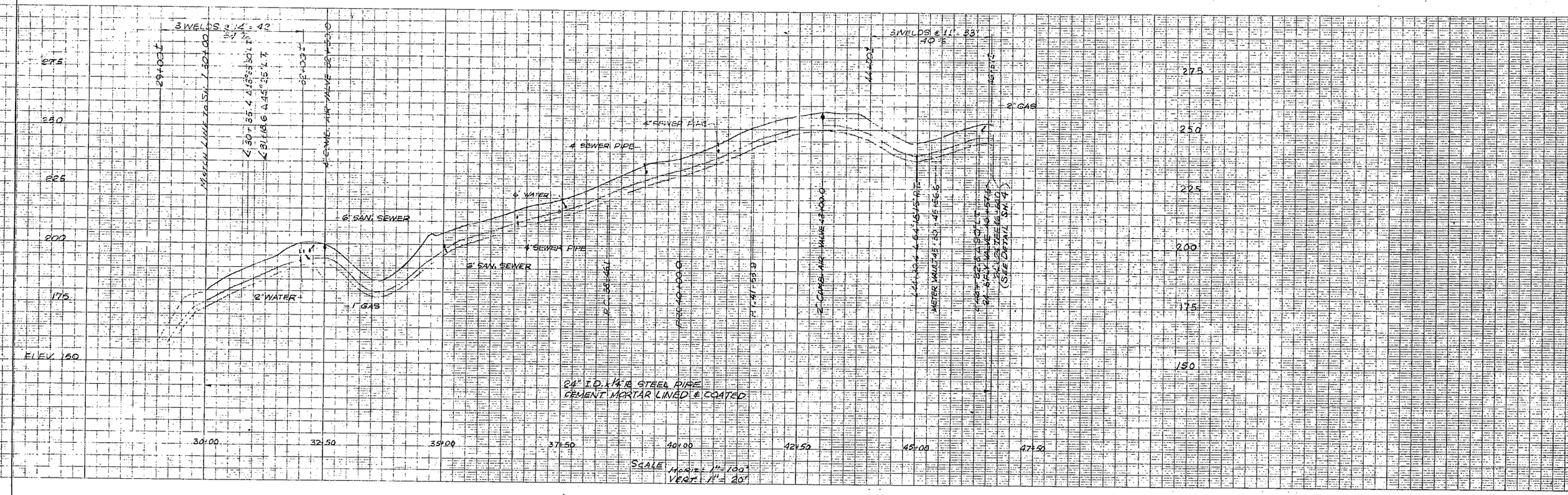

NOTES & LEGEND

- 24" ϕ WATER LINE, THIS CONTRACT
- 24" ϕ WATER LINE, So. FK. WATER BD.
- 6"W — WATER LINE, CITY OF OREGON CITY
- 2"G — GAS LINE N.W. NATURAL GAS CO
- COMBINATION AIR VALVE

EXISTING UNDERGROUND PIPING LOCATIONS APPROXIMATE & POSSIBLY INCOMPLETE
NOTIFY ALL AGENCIES INVOLVED 10 DAYS PRIOR TO EXCAVATION. VERIFY LOCATIONS IN THE FIELD PRIOR TO COMMENCEMENT OF WORK

FABRICATED BENDS

STATION	DEGREE & TYPE
∠30+54.4	Δ 13° 33' 30" Lt. - 1 CUT
∠31+18.6	Δ 45° 25' 00" Lt. - 2 CUT
∠44+90.4	Δ 54° 48' 15" Rt. - 2 CUT
∠46+32.3	Δ 90° 00' 00" Lt. - 3 CUT

NOTE
ANGLES WITHIN JOINT DEFLECTION (4°46') NOT 1-CUT BENDS

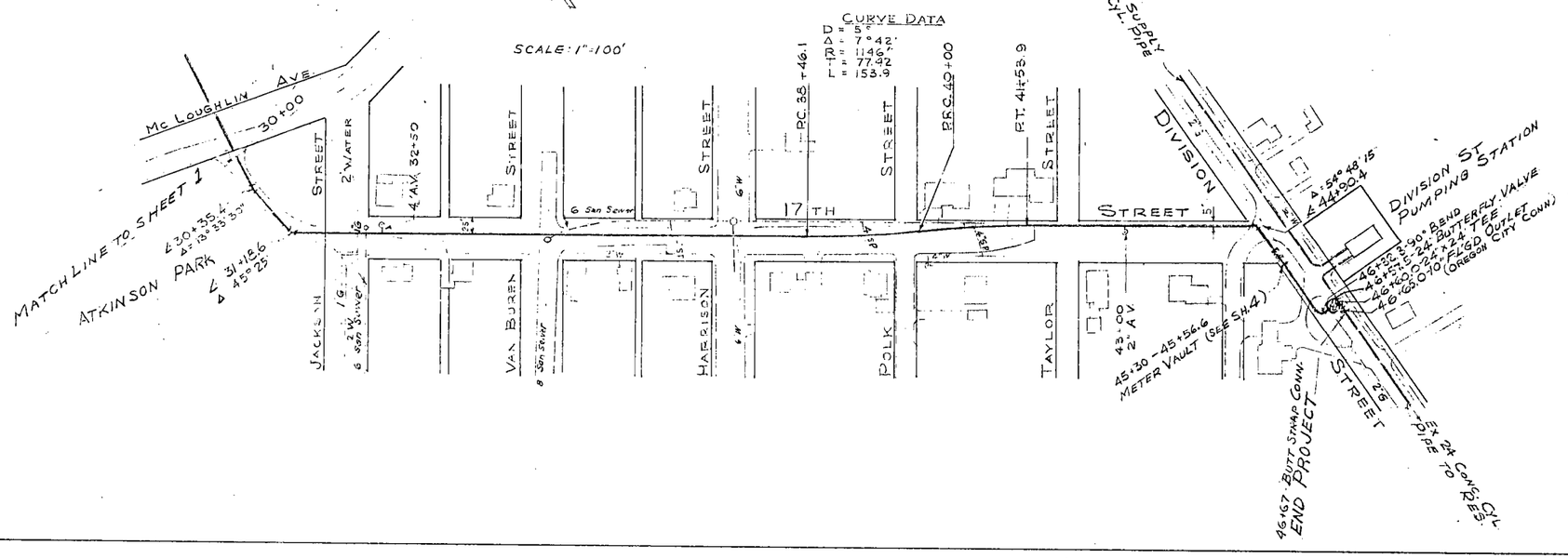

	4	
	3	
	2	
	1	
DATE	NO	BY
REVISIONS		

CITY OF WESTLINN, OREGON

WATER IMPROVEMENT
PHASE I
24" SUPPLY LINE
PLAN/PROFILE
STA. 30+00 - 46+67 - (END PROJECT)

SCALE: AS SHOWN

JOHN W. CUNNINGHAM & ASSOCIATES
CONSULTING ENGINEERS
PORTLAND OREGON

DESIGN	JWB RDA	DATE: FEB. '72	F 797-A-6
DRAWN		NO 2 OF 4	E 5096

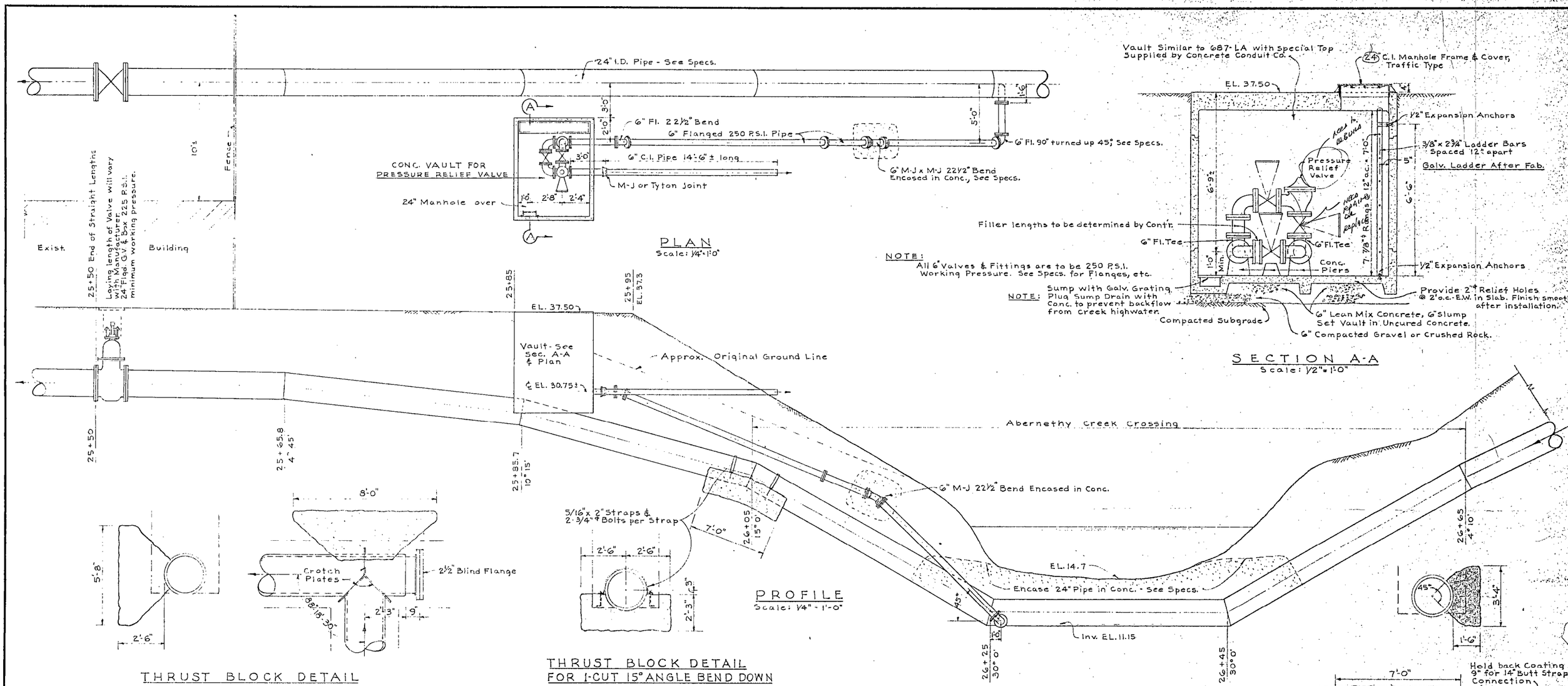

DATE	NO.	BY
	4	
	3	
	2	
	1	

REVISIONS

CITY OF WEST LINN, OREGON

WATER IMPROVEMENTS
PHASE I
24" SUPPLY LINE
CREEK CROSSING, RELIEF VALVE
& THRUST BLOCK DETAILS

SCALE: AS SHOWN

JOHN W. CUNNINGHAM & ASSOCIATES
CONSULTING ENGINEERS — PORTLAND, OREGON

DESIGN	HSB-RDK	DATE	FEB. 1972	F	797-A-7
DESIGN	BBM	NO. 3	OF 4	E	5097

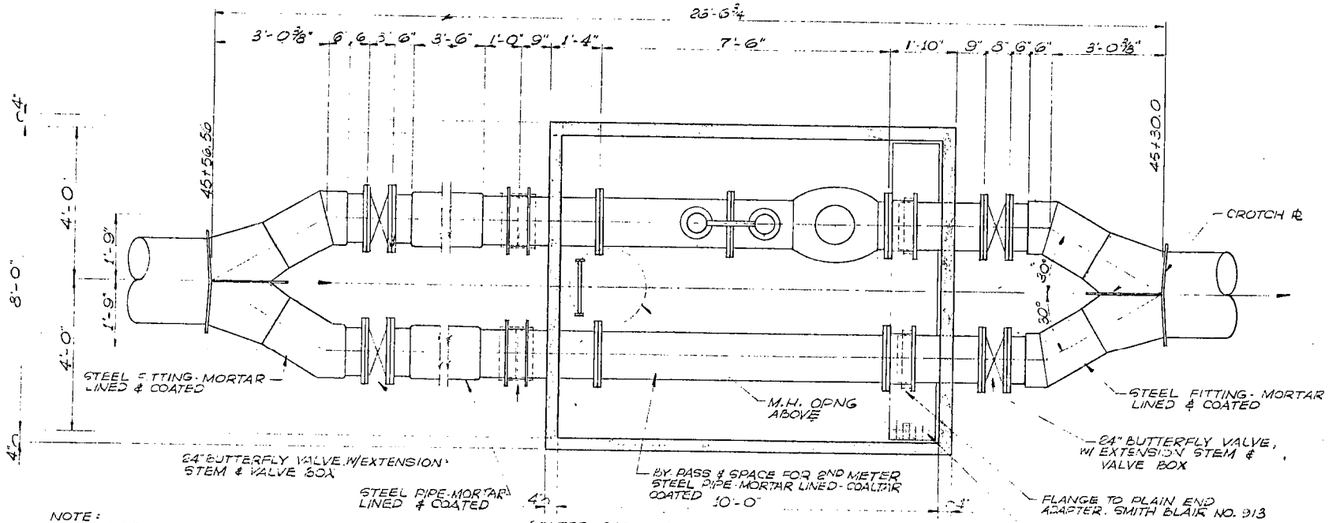

NOTE:
ALL 14" PIPE SHALL BE OF 1/4" THICK STEEL 15" INSIDE DIAMETER WITH 1/8" THICK CEMENT MORTAR LINING & 3/4" THICK CEMENT MORTAR COATING WHERE SHOWN. DO NOT APPLY CEMENT MORTAR COATING ADJACENT TO FLANGE OR COUPLINGS OR TO PIPE INSIDE VAULT. THE EXTERIOR OF ALL PIPE NOT MORTAR COATED SHALL BE SHOP PRIMED WITH A COAL TAR BASE PRIME COAT

PLAN VIEW
1/2" = 1'-0"

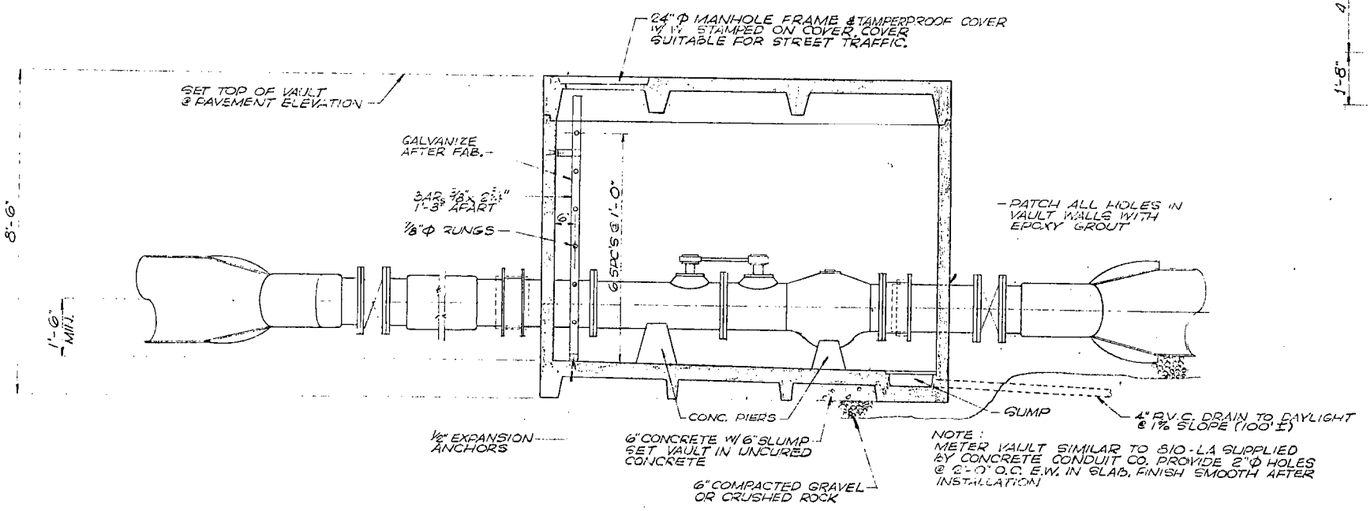

NOTE:
METER VAULT SIMILAR TO 810-LA SUPPLIED BY CONCRETE CONDUIT CO. PROVIDE 2" Φ HOLES @ 2'-0" O.C. E.W. IN SLAB. FINISH SMOOTH AFTER INSTALLATION

SECTION A-A
1" = 1'-0"

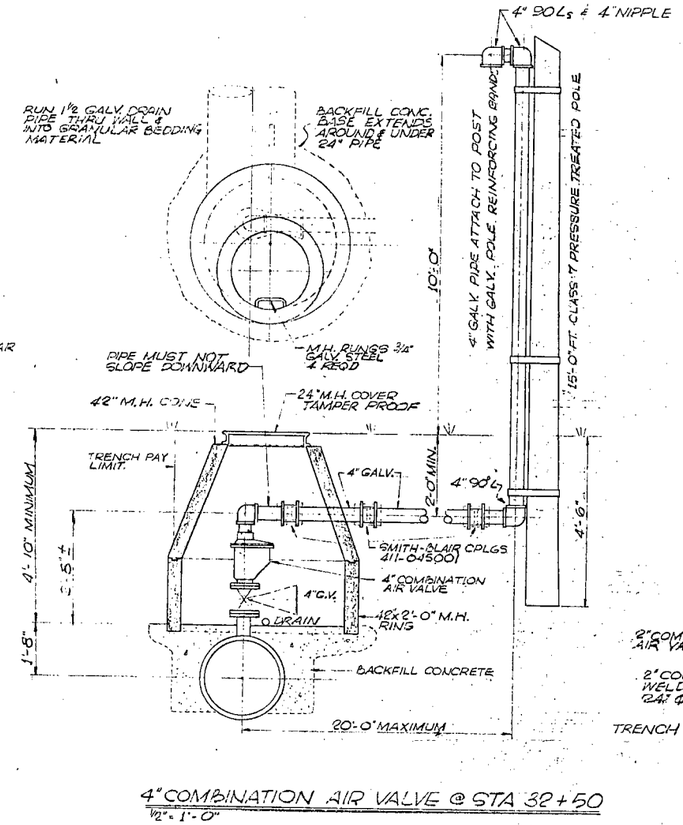

4" COMBINATION AIR VALVE @ STA 32+50
1/2" = 1'-0"

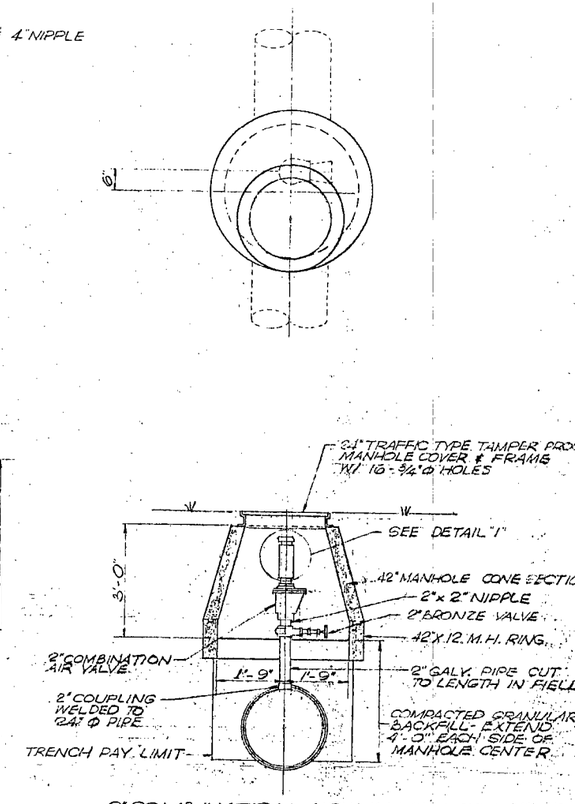

2" COMBINATION AIR VALVE @ STA. 13+0
1/2" = 1'-0"

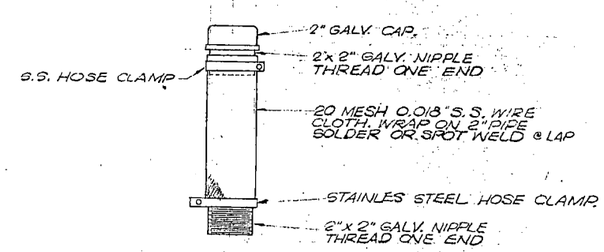

DETAIL "1"
1/4" = FULL

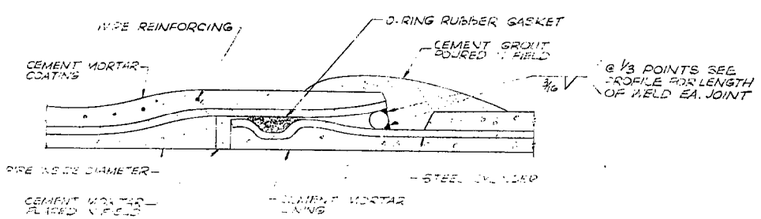

TYPICAL JOINT DETAIL
NO SCALE

DATE	NO.	BY
	4	
	3	
	2	
	1	

REVISIONS

CITY OF W
WATER
F
21
SCAL
J
CONSULTIN
DESIGN
DRAWN