TANNER RIDGE AT ROSEMONT SUBDIVISION

1270 ROSEMONT ROAD
TAX LOT 1100, LOCATED IN THE SE 1/4 OF SECTION 36.
T.2S, R.1E., W.M.
CITY OF WEST LINN, CLACKAMAS COUNTY, OREGON

OWNER/APPLICANT
Icon Construction & Development, LLC
1980 Willamette Falls Drive, Suite 200
West Linn, Oregon 97068
Phone 503-657-0406

Planner
Richard E. Givens, Planning Consultant
11303 Brandow St.
Oregon City, Oregon 97045
Phone 503-479-0097

Engineering
Bruce D. Goldson, PE
Theta, LLC
PO Box 1345
Lake Oswego, Oregon 97035
Phone 503-481-8822

Surveying
Centerline Concepts, land surveying, Inc.
729 Molalla Ave, Suite 1 &2
Oregon City, Oregon 97045
Phone 503-650-0188

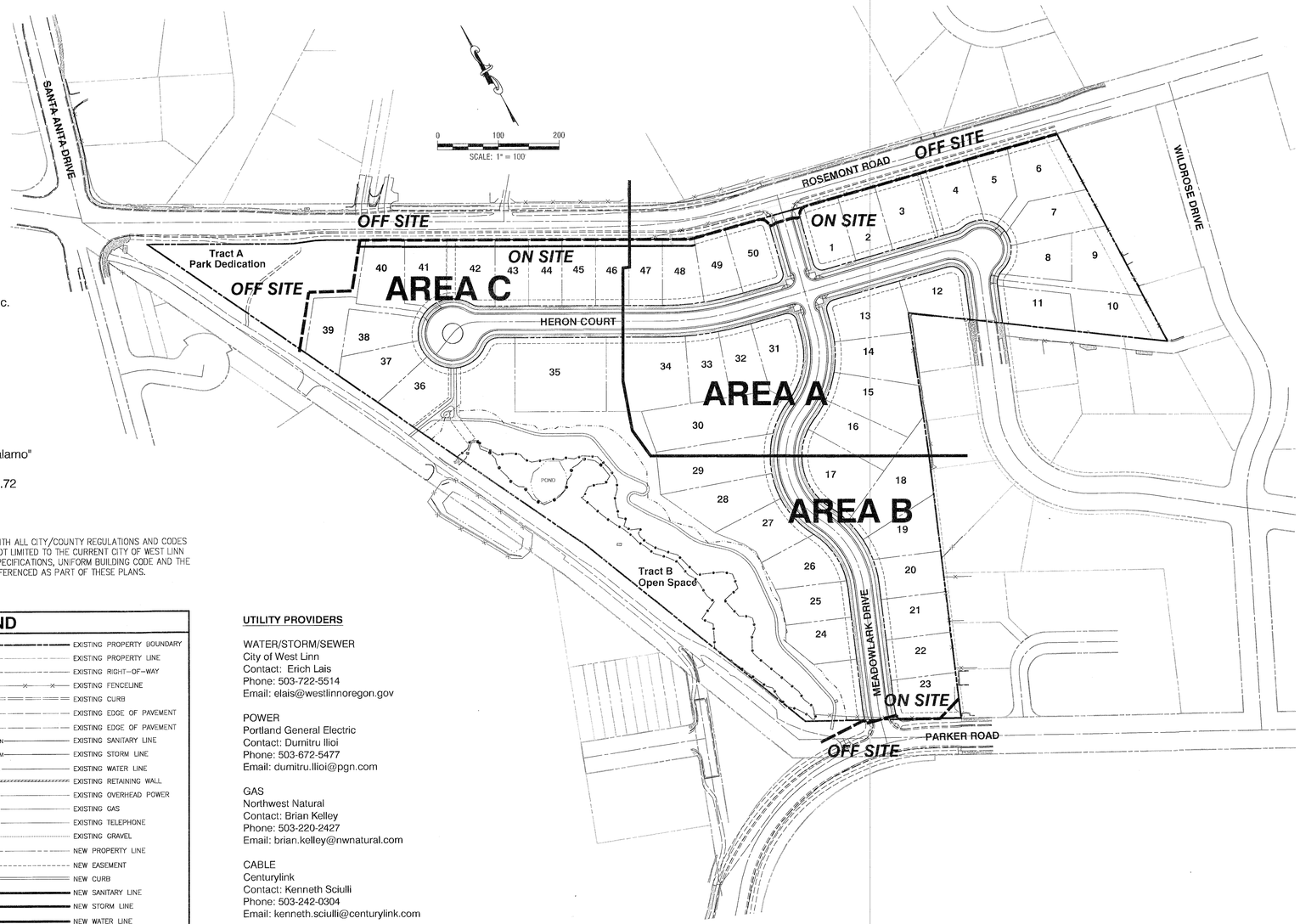

City of West Linn Benchmark "Salamo"
NAVD-88, with Identification No.
PID-AJ8196 and elevation of 672.72

GENERAL NOTES:

1. ALL WORK AND MATERIALS SHALL COMPLY WITH ALL CITY/COUNTY REGULATIONS AND CODES AND O.S.H.A. STANDARDS, INCLUDING BUT NOT LIMITED TO THE CURRENT CITY OF WEST LINN PUBLIC WORKS STANDARD CONSTRUCTION SPECIFICATIONS, UNIFORM BUILDING CODE AND THE A.P.W.A. STANDARDS WHICH ARE HEREBY REFERENCED AS PART OF THESE PLANS.

LEGEND

EXISTING DECIDUOUS TREE	EXISTING PROPERTY BOUNDARY
EXISTING CONIFEROUS TREE	EXISTING PROPERTY LINE
EXISTING SIGN	EXISTING RIGHT-OF-WAY
EXISTING GAS VALVE	EXISTING FENCELINE
EXISTING TRANSFORMER	EXISTING CURB
EXISTING SIGNAL BOX	EXISTING EDGE OF PAVEMENT
EXISTING SIGNAL POST	EXISTING EDGE OF PAVEMENT
EXISTING POWER METER	EXISTING SANITARY LINE
EXISTING STREET LIGHT	EXISTING STORM LINE
EXISTING UTILITY POLE	EXISTING WATER LINE
EXISTING UTILITY RISER	EXISTING RETAINING WALL
EXISTING MAILBOX	EXISTING OVERHEAD POWER
EXISTING POWER VAULT	EXISTING GAS
EXISTING STORM MANHOLE	EXISTING TELEPHONE
EXISTING CATCH BASIN	EXISTING GRAVEL
EXISTING CLEANOUT	NEW PROPERTY LINE
EXISTING SANITARY MANHOLE	NEW EASEMENT
EXISTING WATER VALVE	NEW CURB
EXISTING FIRE HYDRANT	NEW SANITARY LINE
EXISTING WATER METER	NEW STORM LINE
NEW STORM MANHOLE	NEW WATER LINE
NEW STORM CATCH BASIN	EXISTING CONCRETE
NEW COMBO CURB INLET	NEW CONCRETE
NEW SANITARY MANHOLE	NEW AC PAVEMENT
NEW FIRE HYDRANT	
PROPOSED WATER BLOWOFF VALVE	
PROPOSED WATER VALVE	
PROPOSED STREET LIGHT	

UTILITY PROVIDERS

WATER/STORM/SEWER
City of West Linn
Contact: Erich Lais
Phone: 503-722-5514
Email: elais@westlinnoregon.gov

POWER
Portland General Electric
Contact: Dumitru Ilioi
Phone: 503-672-5477
Email: dumitru.Ilioi@pgn.com

GAS
Northwest Natural
Contact: Brian Kelley
Phone: 503-220-2427
Email: brian.kelley@nwnatural.com

CABLE
Centurylink
Contact: Kenneth Sciulli
Phone: 503-242-0304
Email: kenneth.sciulli@centurylink.com

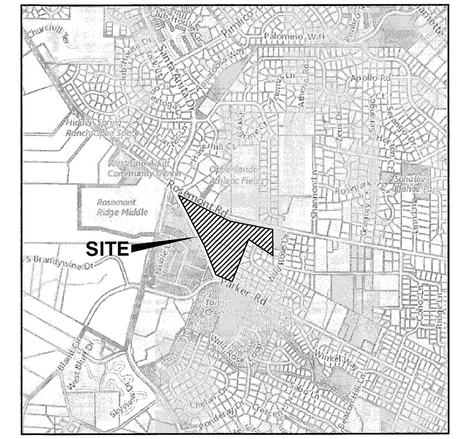

VICINITY MAP
SCALE: NTS

SHEET INDEX

C-1	Cover
C-2	Conditions of Approval
C-3	General Notes
C-4	Existing Conditions
C-5	Area A - Street Plan
C-6	Area B - Street Plan
C-7	Area C - Street Plan
C-8	Street Profiles 1
C-9	Street Profiles 2
C-10	Street Profiles 3
C-11	Signage and Intersection Details
C-12	Area A - Storm Drainage Plan
C-13	Area B - Storm Drainage Plan
C-14	Area C - Storm Drainage Plan
C-15	Storm Drainage Profile STM-1
C-16	Storm Drainage Profiles STM-2,3,5
C-17	Storm Drainage Profiles STM-6,7,8,9.10,11,12
C-18	Storm Detention Facility 1
C-19	Storm Detention Facility 2
C-20	Area A - Sanitary Sewer Plan
C-21	Area B - Sanitary Sewer Plan
C-22	Area C - Sanitary Sewer Plan
C-23	Sanitary Sewer Profiles SAN-1,3
C-24	Sanitary Sewer Profiles SAN-2
C-25	Area A - Water Plan
C-26	Area B - Water Plan
C-27	Area C - Water Plan
C-28A	NPDES Erosion Control Cover
C-28B	NPDES Clearing and Demolition Erosion and Sediment Control Plan
C-28C	Tree Removal and Protection Plan
C-28D	NPDES Area A - Grading, Street and Utility Construction
C-28E	NPDES Area B - Grading, Street and Utility Construction
C-28F	NPDES Area C - Grading, Street and Utility Construction
C-28G	NPDES Details
C-29	Pathway Plan
C-30	Pathway Profiles
C-31	Schematic Retaining Wall Plan and Profile
D-1	Standard Details
D-2	Standard Details
D-3	Standard Details
D-4	Standard Details

APPROVED FOR CONSTRUCTION BY
CITY OF WEST LINN
This approval is only for general conformance with the design concept and general compliance with applicable codes and requirements and shall not be construed as relieving the Design Engineer of full responsibility for accuracy and completeness of the drawings. This plan review approval does not prevent the City from requiring further code corrections.
DATE: 6/2 BY: ENGINEERING
DATE: BY: PLANNING

REGISTERED PROFESSIONAL ENGINEER 7726 OREGON JULY 16, 1971 BRUCE D. GOLDSON
EXPIRES: 06/30/2017
SIGNATURE DATE: 05/25/2017

COVER

2015-129M

DESIGNED:	BDG			
DRAWN:	BJS			
SCALE:	1" = 60'	05/24/2017	2	MODIFICATION PER REVIEW BY CITY STAFF
DATE:	March, 2016	04/10/2017	1	REVIEW PER INITIAL CITY REVIEW
FILE:	Rosemont Civil1	DATE	NO.	REVISION

Theta, llc
ENGINEERING - SURVEYING - PLANNING
PO Box 1345 Lake Oswego, Oregon 97035
503/481-8822 email: thetaeng@comcast.net

Icon Construction & Development, LLC
1980 Willamette Falls Drive, Suite 200
West Linn, OR 97068
PH: (503) 657-0406

Tanner Ridge at Rosemont
1270 Rosemont Road
West Linn, Oregon

SHEET: C-1

WEST LINN PLANNING COMMISSION

FINAL DECISION AND ORDER

PUD-16-01/SUB-16-01/ WAP-16-05/VAR-16-01/ VAR-16-02/WRG-16-01

IN THE MATTER OF A PROPOSAL TO DEVELOP THE 50-LOT PLANNED UNIT DEVELOPMENT, SUBDIVISION, WATER RESOURCE AREA PERMIT, TWO CLASS II VARIANCES, AND HABITAT CONSERVATION AREA PERMIT INCLUDING HABITAT CONSERVATION AREA BOUNDARY VERIFICATION AT 1270 ROSEMONT ROAD.

I. Overview

At their meeting of September 21, 2016, the West Linn Planning Commission ("Commission") held a public hearing to consider the request by ICON Construction and Development LLC, to approve a proposal to develop the 50 lot Planned Unit Development (PUD), Subdivision, Water Resource Area Permit, Class II Variances, and Habitat Conservation Area permit including Habitat Conservation Area Boundary Verification. The approval criteria include Community Development Code (CDC) Chapter 11, Single-Family Residential, R 10; Chapter 85, Land Division General Provisions; Chapter 32, Water Resource Area Protection; Chapter 24: PUD; Chapter 75: Class II Variances, and Chapter 28: Willamette and Tualatin River Protection. The hearing was conducted pursuant to the provisions of CDC Chapter 99.

The hearing commenced with a staff report presented by Peter Spir, Associate Planner. Planning Consultant Rick Givens, presented for the applicant. Testimony was heard from William Relyea and Brenda Rae Scott. The hearing was closed and a motion was made by Commissioner Myers and seconded by Commissioner Mathews to approve the application with 12 conditions of approval. The motion passed unanimously.

II. The Record

The record was finalized at the September 21, 2016, hearing. The record includes the entire file from PUD-16-01/SUB-16-01/ WAP-16-05/VAR-16-01/ VAR-16-02/WRG-16-01.

III. Findings of Fact

1) The Overview set forth above is true and correct.
2) The applicant is ICON Construction and Development LLC.
3) The Commission finds that it has received all information necessary to make a decision based on the Staff Report and attached findings; public comment, if any; and the evidence in the whole record, including any exhibits received at the hearing.

IV. Findings

The Commission adopts the Staff Report and Addendum for September 21, 2016, with attachments, as its findings, which are incorporated by this reference. The Commission concludes that all of the required approval criteria are met subject to the following conditions of approval:

1. Site Plan. With the exception of modifications as required by these conditions and the HCA Boundary change, the project shall conform to the Tentative Plan (June 2016), the Tree Preservation Plan, the Habitat Conservation Areas, Slope Analysis, Wetlands Plan as identified in Sheets 1/1 to 1/5 respectively and the Utility Plan, Street Profiles and Concept Plan identified as Sheets 1/3 to 3/3 respectively.
2. Engineering Standards. All public improvements and facilities associated with public improvements including street improvements, utilities, grading, onsite storm water design, street lighting, easement and easement locations are subject to the City Engineer's review, modification, and approval. These must be designed, constructed and completed prior to final plat approval.
   a. Public Works may coordinate with the applicant to complete voluntary additional off-site improvements along Rosemont Road.
   b. The applicant shall replace the existing 8" ductile iron water pipe along Rosemont Road from Salamo Road to Wildrose Drive with a 12" ductile iron water pipe per the City Water Master Plan.
3. Fire Flow. Prior to approval of the final plat, the applicant shall perform a fire flow test and submit a letter from Tualatin Valley Fire and Rescue showing adequate fire flow is present.
4. Significant Tree Mitigation. Prior to approval of the final plat, the applicant will submit a tree mitigation plan to the City's arborist that reflects planting the required number of two-inch caliper trees on the project site. All trees that will be planted in what will become the City owned tracts and/or common areas must be planted prior to final plat approval. The applicant will provide assurance satisfactory to the City Attorney for all of the trees to be planted on individual lots at the time of plat recording. The applicant will provide proof that all tree plantings required on individual lots were completed before the surety is released. Trees which are not able to be planted on site will be mitigated for either in off-site plantings in a location chosen by the City's arborist or the applicant will pay a fee in lieu to the City for trees which cannot be planted on site.
5. Access Restriction. Lots 1-6 and lots 40-50 shall have 10 foot wide "Access Restricted" easements established along their north lot lines adjacent to the Rosemont Road ROW which will state that these lots are prohibited from direct access to Rosemont Road.
6. Access Easement. Mutual access and maintenance easements covering the joint driveways for lots 39 and 40 and the joint driveway for lots 9 and 10 shall be recorded to assure access to the closest public street for all users of the private driveway.
7. Trail. The trail, identified on the Tentative Plan as a "hog fuel path", shall be constructed at least 30 feet from Tanner Creek and the delineated wetland boundary except at the creek crossing.
8. Tract A and B Dedication. The final plat will show the dedication of Tracts A and B to the City for park. All necessary procedures for dedication to the City shall be completed *prior to recording the final plat including the removal of all invasive plants in these* tracts and re-vegetation with native plants, trees and shrubs.
9. Underground Existing Utilities. The applicant shall coordinate with PGE and associated franchised utility companies to place all existing overhead utilities along Rosemont Road and Parker Road underground for their frontage.
10. HCA Boundary. This approval is subject to final approval of the HCA Map boundary, which is subject to the process in CDC 28.070. The applicant shall provide a map that depicts areas the applicant finds to be outside of the HCA Map boundary for verification by the City.
11. Setbacks. Setbacks shall be five feet for the side yard, 10 feet for side street, 15 feet for front yard and rear yard, (front and rear porches may encroach forward another five feet). Setback areas contiguous to the perimeter of the project, excluding ROW, shall be the same as those required by the R-10 zone. The setbacks provisions of CDC Chapter 34 and 38 shall apply. The maximum lot coverage is 45 percent. Unless modified by these provisions, all other standards of the R-10 zone shall apply.
12. Crosswalks and Traffic Calming. The applicant will coordinate with Public Works to include traffic calming options, if allowable by the Transportation System Plan and acceptable to the City Engineer, on Meadowlark Drive and the intersections of Meadowlark Drive and Rosemont Road and Meadowlark Drive and Parker Road prior to final plat.

V. Order

The Commission concludes that PUD-16-01/SUB-16-01/ WAP-16-05/VAR-16-01/ VAR-16-02/WRG-16-01 is approved based on the Record, Findings of Fact and Findings above.

Gary Walvatne — 26 September 2016

GARY WALVATNE, VICE CHAIR — DATE

WEST LINN PLANNING COMMISSION

This decision may be appealed to the City Council pursuant to the provisions of Chapter 99 of the Community Development Code and any other applicable rules and statutes. This decision will become effective 14 days from the date of mailing of this final decision as identified below.

Mailed this 26th day of September, 2016.

Therefore, this decision becomes effective at 5 p.m., October 10, 2016.

Devrev/projects folder/projects PUD 16-01 final decision

CONDITIONS OF APPROVAL

2015-129M

DESIGNED:	BDG			
DRAWN:	BJS			
SCALE:	1" = 60'			
DATE:	March, 2016	04/10/2017	1	REVIEW PER INITIAL CITY REVIEW
FILE:	Rosemont Civil1	DATE	NO.	REVISION

Theta, llc
ENGINEERING - SURVEYING - PLANNING
PO Box 1345, Lake Oswego, Oregon 97035
503/481-8822, email: thetaeng@comcast.net

Icon Construction & Development, LLC
1980 Willamette Falls Drive, Suite 200
West Linn, OR 97068
PH: (503) 657-0406

Tanner Ridge at Rosemont
1270 Rosemont Road
West Linn, Oregon

SHEET: C-2

F:\Autoc\Rosemont\Rosemont Civil1.dwg, 4/18/2017 1:03:15 PM

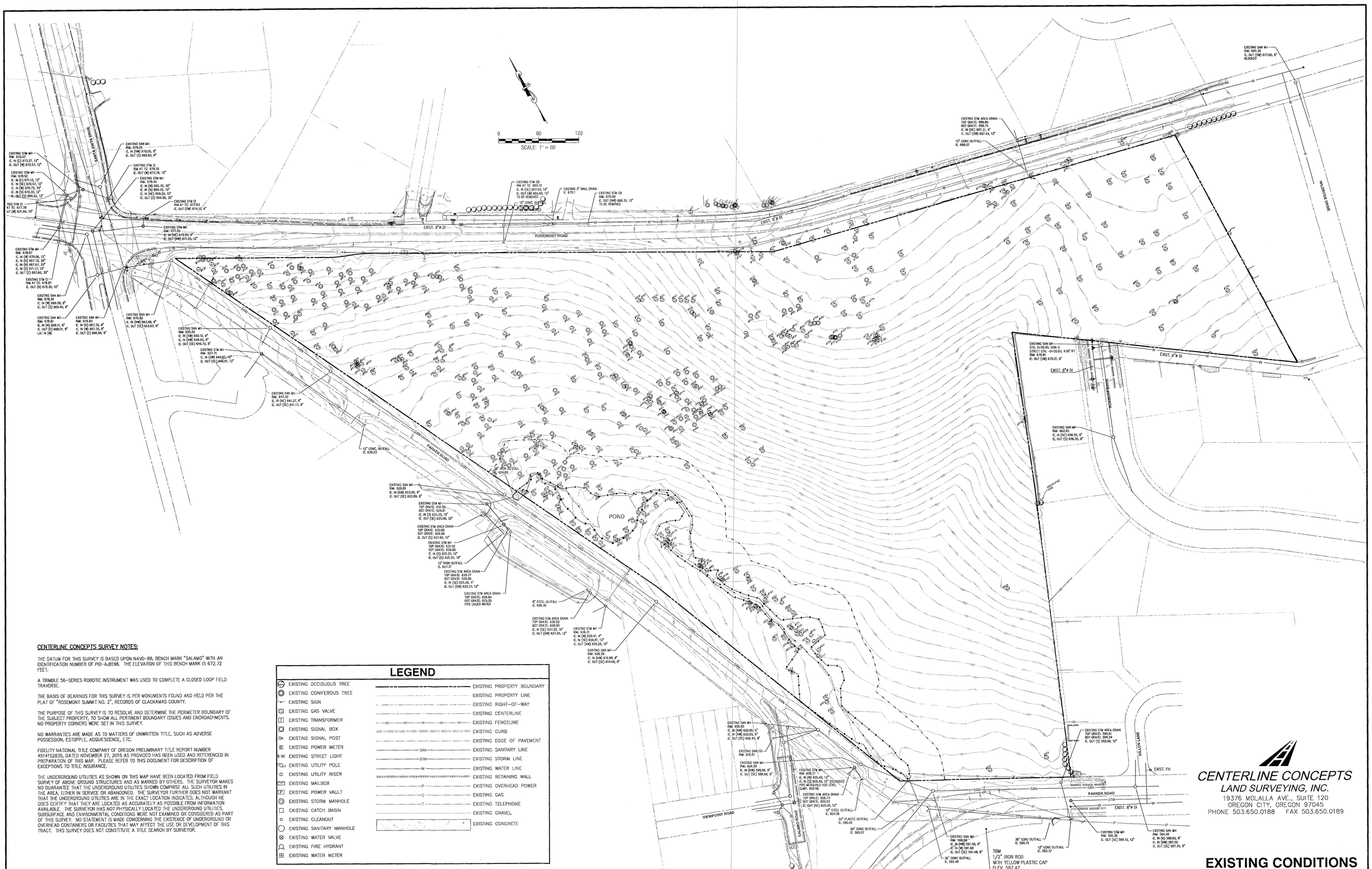

CENTERLINE CONCEPTS SURVEY NOTES:

THE DATUM FOR THIS SURVEY IS BASED UPON NAVD-88, BENCH MARK "SALAMO" WITH AN IDENTIFICATION NUMBER OF PID-AJ8196. THE ELEVATION OF THIS BENCH MARK IS 672.72 FEET.

A TRIMBLE 56-SERIES ROBOTIC INSTRUMENT WAS USED TO COMPLETE A CLOSED LOOP FIELD TRAVERSE.

THE BASIS OF BEARINGS FOR THIS SURVEY IS PER MONUMENTS FOUND AND HELD PER THE PLAT OF "ROSEMONT SUMMIT NO. 2", RECORDS OF CLACKAMAS COUNTY.

THE PURPOSE OF THIS SURVEY IS TO RESOLVE AND DETERMINE THE PERIMETER BOUNDARY OF THE SUBJECT PROPERTY, TO SHOW ALL PERTINENT BOUNDARY ISSUES AND ENCROACHMENTS. NO PROPERTY CORNERS WERE SET IN THIS SURVEY.

NO WARRANTIES ARE MADE AS TO MATTERS OF UNWRITTEN TITLE, SUCH AS ADVERSE POSSESSION, ESTOPPLE, ACQUIESCENCE, ETC.

FIDELITY NATIONAL TITLE COMPANY OF OREGON PRELIMINARY TITLE REPORT NUMBER 4514152835, DATED NOVEMBER 27, 2015 AS PROVIDED HAS BEEN USED AND REFERENCED IN PREPARATION OF THIS MAP. PLEASE REFER TO THIS DOCUMENT FOR DESCRIPTION OF EXCEPTIONS TO TITLE INSURANCE.

THE UNDERGROUND UTILITIES AS SHOWN ON THIS MAP HAVE BEEN LOCATED FROM FIELD SURVEY OF ABOVE GROUND STRUCTURES AND AS MARKED BY OTHERS. THE SURVEYOR MAKES NO GUARANTEE THAT THE UNDERGROUND UTILITIES SHOWN COMPRISE ALL SUCH UTILITIES IN THE AREA, EITHER IN SERVICE OR ABANDONED. THE SURVEYOR FURTHER DOES NOT WARRANT THAT THE UNDERGROUND UTILITIES ARE IN THE EXACT LOCATION INDICATED, ALTHOUGH HE DOES CERTIFY THAT THEY ARE LOCATED AS ACCURATELY AS POSSIBLE FROM INFORMATION AVAILABLE. THE SURVEYOR HAS NOT PHYSICALLY LOCATED THE UNDERGROUND UTILITIES. SUBSURFACE AND ENVIRONMENTAL CONDITIONS WERE NOT EXAMINED OR CONSIDERED AS PART OF THIS SURVEY. NO STATEMENT IS MADE CONCERNING THE EXISTENCE OF UNDERGROUND OR OVERHEAD CONTAINERS OR FACILITIES THAT MAY AFFECT THE USE OR DEVELOPMENT OF THIS TRACT. THIS SURVEY DOES NOT CONSTITUTE A TITLE SEARCH BY SURVEYOR.

LEGEND

EXISTING DECIDUOUS TREE	EXISTING PROPERTY BOUNDARY
EXISTING CONIFEROUS TREE	EXISTING PROPERTY LINE
EXISTING SIGN	EXISTING RIGHT-OF-WAY
EXISTING GAS VALVE	EXISTING CENTERLINE
EXISTING TRANSFORMER	EXISTING FENCELINE
EXISTING SIGNAL BOX	EXISTING CURB
EXISTING SIGNAL POST	EXISTING EDGE OF PAVEMENT
EXISTING POWER METER	EXISTING SANITARY LINE
EXISTING STREET LIGHT	EXISTING STORM LINE
EXISTING UTILITY POLE	EXISTING WATER LINE
EXISTING UTILITY RISER	EXISTING RETAINING WALL
EXISTING MAILBOX	EXISTING OVERHEAD POWER
EXISTING POWER VAULT	EXISTING GAS
EXISTING STORM MANHOLE	EXISTING TELEPHONE
EXISTING CATCH BASIN	EXISTING GRAVEL
EXISTING CLEANOUT	EXISTING CONCRETE
EXISTING SANITARY MANHOLE	
EXISTING WATER VALVE	
EXISTING FIRE HYDRANT	
EXISTING WATER METER	

CENTERLINE CONCEPTS
LAND SURVEYING, INC.
19376 MOLALLA AVE., SUITE 120
OREGON CITY, OREGON 97045
PHONE 503.650.0188 FAX 503.650.0189

EXISTING CONDITIONS

2015-129M

DESIGNED:	BDG			
DRAWN:	BJS			
SCALE:	1" = 60'			
DATE:	March, 2016	04/10/2017	1	REVIEW PER INITIAL CITY REVIEW
FILE:	Rosemont Civil1	DATE	NO.	REVISION

Theta, llc
ENGINEERING - SURVEYING - PLANNING
PO Box 1345
Lake Oswego, Oregon 97035
503/481-8822
email: thetaeng@comcast.net

Icon Construction & Development, LLC
1980 Willamette Falls Drive, Suite 200
West Linn, OR 97068
PH: (503) 657-0406

Tanner Ridge at Rosemont
1270 Rosemont Road
West Linn, Oregon

SHEET: C-4

F:\Apps\Rosemont\Rosemont Civil1.dwg, 4/18/2017 1:13:49 PM

GENERAL NOTES:

1. THESE PLANS REPRESENT PUBLIC IMPROVEMENTS ASSOCIATED WITH ROSEMONT AND PARKER ROAD, TO INCLUDE STREET STORM AND WATER. SEE THE ON SITE PLANS FOR IMPROVEMENTS WITHIN THE TANNER RIDGE SUBDIVISION.
2. ALL REFERENCES TO THE CITY OF WEST LINN STANDARDS REFER TO THE CURRENT STANDARDS AND SPECIFICATIONS.
3. THE DESIGN ENGINEER WILL BE RESPONSIBLE FOR INSPECTION OF THE PROPOSED IMPROVEMENTS WITH OVERSIGHT FROM THE CITY OF WEST LINN.
4. THE CONTRACTOR SHALL PROVIDE A WORK SCHEDULE TO THE ENGINEER AND CITY AND PROVIDE 24-HOUR NOTICE OF ANY TESTING REQUIRING WITNESSING BY THE CITY OF ENGINEER.
5. ANY CHANGES TO THE PLANS MUST RECEIVE APPROVAL BY THE ENGINEER AND CITY IN WRITING BEFORE PROCEEDING WITH THE WORK.
6. A PUBLIC IMPROVEMENT GUARANTEE AGREEMENT, PUBLIC WORKS PERMIT, A PRE-CONSTRUCTION MEETING, INSTALLATION OF THE EROSION CONTROL MEASURES, ARE ALL REQUIRED PRIOR TO BEGINNING CONSTRUCTION.
7. PRIOR TO SITE CLEARING A 6-FOOT TALL CHAIN-LINK FENCE SHALL BE PLACED AT THE TREE EASEMENT BOUNDARIES PRIOR TO SITE GRADING. THE CITY ARBORIST SHALL INSPECT AND APPROVE ALL THE TREE PROTECTION MEASURES PRIOR TO THE START OF THE SITE WORK. ALL TREE PROTECTION MEASURES SHALL REMAIN IN PLACE AND FUNCTIONAL FOR THE ENTIRE DURATION OF CONSTRUCTION.
8. A CITY AND ENGINEER REPRESENTATIVE MUST BE PRESENT FOR ALL TESTING, AND THE CITY SHALL BE FURNISHED A COPY OF ALL TEST RESULTS.
9. CONTRACTOR SHALL VERIFY DEPTH AND LOCATION OF EXISTING UTILITIES AND POINTS OF CONNECTION PRIOR TO ORDERING MATERIALS. OTHER EXISTING UTILITIES MAY EXIST AND IF DISCREPANCIES ARE FOUND THE CONTRACT SHALL NOTIFY THE ENGINEER.
10. THE CONTACTOR SHALL ERECT AND MAINTAIN TRAFFIC CONTROL PER THE MANUAL OF UNIFORM TRAFFIC CONTROL DEVICES, PART VI. CONSTRUCTION AND MAINTENANCE AND SUBMIT A TRAFFIC PLAN TO THE CITY PRIOR TO BEGINNING WORK.
10. OREGON LAY REQUIRES THAT THE RULES ADOPTED BY OREGON UTILITY NOTIFICATION CENTER BE FOLLOWED THOSE RULES SET FORTH IN OAR 952-001-0090. COPIES OF THE RULES ARE AVAILABLE BY CALLING THE CENTER OR ACCESSING VIA INTERNET AT WWW.CALLBEFOREYOUDIG.ORG <HTTP://WWW.CALLBEFOREYOUDIG.ORG>. PORTLAND METRO AREA 503-246-6699

STREET NOTES:

1. ALL STREET SECTIONS TO BE GRUBBED AND GRADED TO A MINIMUM OF 8-INCHES BELOW THE SUBGRADE.
2. THE STREET SUBGRADE SHALL CONFORM TO DIVISION 501 OF THE CITY OF WEST LINN STANDARD CONSTRUCTION SPECIFICATIONS. AREAS TO RECEIVE FILL ARE TO BE INSPECTED BY THE CITY OF WEST LINN PERSONNEL AND PROJECT GEOTECHNICAL PRIOR TO PLACEMENT OF FILL. THE PROJECT GEOTECHNICAL SHALL TEST FOR COMPACTION PER DIVISION 501.03.08 OF THE WEST LINN STANDARD CONSTRUCTION SPECIFICATIONS.
3. AGGREGATE BASE ROCK SHALL CONFORM TO THE REQUIREMENTS OF DIVISION 205 OF THE WEST LINN STANDARD CONSTRUCTION SPECIFICATIONS. BASE COURSE IS 1 1/2" - 0" CRUSHED ROCK AND LEVELING COURSE IS 3/4"-0" CRUSHED ROCK. THE CITY OF WEST LINN REQUIRES A PROOF ROLL WITH A LOADED 10-CUBIC YARD DUMP TRUCK OF THE SUBGRADE PRIOR TO PLACEMENT OF THE BASE ROCK AND AT TOP OF ROCK JUST PRIOR TO PAVING.
4. ASPHALT CONCRETE SHALL CONFORM TO THE REQUIREMENTS OF WEST LINN STANDARD CONSTRUCTION SPECIFICATIONS, DIVISION 205. THE BASE LIFT SHALL BE CLASS "B" AC AND THE TOP LIFT SHALL BE CLASS "C" AC MEETING THE WEST LINN STANDARD CONSTRUCTION SPECIFICATIONS, DIVISION 505. THE TOP LIFT OF ASPHALT CONCRETE SHALL NOT BE PLACED PRIOR TO RECEIVING AUTHORIZATION FROM THE CITY OF WEST LINN.
5. CURB AND GUTTER SHALL HAVE A COMPRESSIVE STRENGTH OF 3300 PSI, AND MAXIMUM AGGREGATE. PER DIVISION 205 OF THE WEST LINN STANDARD CONSTRUCTION SPECIFICATIONS. A PROOF ROLL OF THE CURB LINES IS REQUIRED PRIOR TO CURB PLACEMENT. CONTRACTION JOINTS ARE TO BE INSTALLED AT 15-FOOT MAXIMUM. THE CONTRACTOR IS TO STAMP LOCATION OF SEWER AND WATER LINES CROSSING THE CURB LINE WITH AN "S" OR "W".
6. A STREET CONSTRUCTION ENCROACHMENT PERMIT OF SIMILAR PERMIT MAY BE REQUIRED FROM THE CITY OF WEST LINN.

STORM SEWER NOTES:

1. EIGHT TO TWENTY FOUR INCH STORM DRAIN PIPE SHALL BE CLASS 3, NON-REINFORCED CONFORMING TO ASTM C714, OR REINFORCED CONFORMING TO ASTM C-76, CLASS IV CONCRETE PIPE OR DUCTILE IRON CONFORMING TO ASTM C 151, CLASS 52, WITH RUBBER JOINTS REQUIRED.
2. GUTTER INLETS SHALL BE POURED IN PLACE CONCRETE WITH A MINIMUM COMPRESSIVE STRENGTH OF 3300 PSI. FRAMES SHALL BE FABRICATED OF STRUCTURAL STEEL, ASTM A-7,A-36 A-37.33.
3. MANHOLE BASES MAY BE POURED IN PLACE CONCRETE WITH A MINIMUM COMPRESSIVE STRENGTH OF 3300PSI OR PRECAST. MANHOLE RISERS AND TOPS SHALL BE PRECAST WITH MINIMUM COMPRESSIVE STRENGTH OF 4000 PSI. TOPS SHALL BE ECCENTRIC CONES EXCEPT WHERE THERE IS INSUFFICIENT HEADROOM REQUIRES A FLAT TOP. THE INTERIOR DIMENSIONS NOTED ON THE PLANS ARE MINIMUMS, AND SOME OR ALL OF THE STORM MANHOLES ARE REQUIRED TO BE OVERSIZED. THE CONTRACTOR SHALL VERIFY WITH THE MANHOLE MANUFACTURER FOR THE ACTUAL SIZE OF MANHOLE NEEDED FOR TYPE AND SIZE OF PIPE TO BE USED. INVERTS SHALL BE CONSTRUCTED SO AS TO PROVIDE A SMOOTH FLOW AND PIPES SHALL BE CONNECTED TO THE MANHOLE BY MEANS OF A FLEXIBLE CONNECTION AND SHALL HAVE A SHEAR JOINT LOCATED 18-INCH OUTSIDE THE MANHOLE.
4. MNAHOLES LOCATED IN EASEMENTS SHALL REQUIRED A TAMPER PROOF FRAME AND COVER AND SET 12-INCHES ABOVE FINISHED GRADE IN UNPAVED AREAS.
5. GRANULAR BACKFILL (3/4"-0") IS TO BE COMPACTED TO 95% OF MAXIMUM DRY DENSITY PER ASHTO T-180 TEST METHOD AND NATIVE MATERIAL SHALL BE COMPACTED TO 95% OF IN-PLACE DRY DENSITY OF SURROUNDING SOIL.
6. STORM DRAIN SERVICE LATERALS SHALL BE 4-INCH CONFORMING TO ASTM D 3034 PVC AND BE INSTALLED TO A POINT BEYOND THE UTILITY EASEMENT AS SHOWN ON THE PLANS. THE LATERAL WILL BE PLUGGED WITH A RUBBER RING PLUG AND THE LOCATION MARKED WITH A 2X4 PAINTED WHITE.
7. A VIDEO INSPECTION IN ACCORDANCE WITH DIVISION 601.03.11 PER THE WEST LINN STANDARD CONSTRUCTION SPECIFICATIONS. ALL TESTS SHALL BE WITNJESSED BY THE ENGINEER AND A REPRESENTATIVE OF THE CITY.
8. A PLUMBING PERMIT IS REQUIRED FOR ALL STORM DRAINS BEYOND THE FIRST CLEANOUT.

SANITARY SEWER NOTES:

1. PIPE SHALL BE PVC SEWER PIPE CONFORMING TO ASTM D-3034 SDR 35, MINIMUM STIFFNESS SHALL BE 46 PSI AND JOINT TYPE SHALL BE ELASTOMERIC GASKET CONFORMING TO ASTM D-3212
2. MANHOLE BASE SHALL BE POURED IN PLACE CONCRETE BASE WITH A MINIMUM COMPRESSIVE STRENGTH OF 3300 PSI OR PRECAST. MANHOLE RISERS AND TOPS SHALL BE PRECAST SECTIONS WITH MINIMUM COMPRESSIVE STRENGTH OF 4000 PSI. TOPS SHALL BE ECCENTRIC CONES EXCEPT WHERE INSUFFICIENT HEADROOM REQUIRES FLAT TOP SECTIONS. INVERTS SHALL BE CONSTRUCTED TO AS TO PROVIDE A SMOOTH FLOW WITH THE CHANNEL BEING ABLE TO PASS A 6"X36" CYLINDER INTO THE PIPES. PVC PIPE SHALL BE CONNECTED TO THE MANHOLE BY MEANS OF A FLEXIBLE CONNECTION AND SHALL BE A SHEAR JOINT LOCATED 18-INCHES OUTSIDE THE MANHOLE. CEMENT GROUT FOR CONNECTING PVC SEWER PIPE WILL NOT BE PERMITTED.
3. ALL MANHOLES LOCATED IN EASEMENT AREAS WILL HAVE TAMPER PROOF FRAMES AND COVERS WITH THE COVER SET 12-INCHES ABOVE THE FINISH GRADE IN UNPAVED AREAS.
4. GRANULAR BACKFILL (3/4"-0") IS TO BE COMPACTED TO 95% OF THE MAXIMUM DRY DENSITY OF AASHTO T-180 TEST METHOD. NATIVE BACKFILL MATERIALS SHALL BE COMPACTED TO 95% OF IN-PLACE DRY DENSITY OF SURROUNDING SOIL. EXCAVATION, BEDDING AND BACKFILL TO BE IN ACCORDANCE WITH DIVISION 204 OF THE WEST LINN STANDARD CONSTRUCTION SPECIFICATIONS. BACKFILL WITHIN NEW STREETS SHALL BE CLASS B AND EXISTING STREETS SHALL BE CLASS E.
5. PVC SERVICE LATERALS SHALL BE 4-INCH CONFORMING TO THE SAME MATERIALS AS THE MAINLINE SEWERS. SERVICE LATERALS SHALL BE INSTALLED TO A POINT BEYOND THE UTILITY EASEMENT AS SHOWN ON THE PLAN. THE SERVICE LATERALS SHALL BE PLUGGED WITH THE LOCATION MARKED WITH 2X4 PAINTED GREEN.
6. SANITARY SEWER PIPE, INCLUDING SERVICE LATERALS SHALL BE TESTED FOR IN ACCORDANCE WITH WEST LINN STANDARD CONSTRUCTION SPECIFICATIONS, DIVISION 301.03.09 AND MANHOLES TO BE VACUUM TESTED IN ACCORDANCE WITH DIVISION 302.03.07. TESTS SHALL BE WITNESSED BY THE ENGINEER AND THE CITY OF WEST LINN. CONTRACTOR IS RESPONSIBLE FOR COORDINATED THE TESTING AND PROVIDING PASSING TESTS PRIOR TO CONNECTION TO THE EXISTING SYSTEM.
7. A PLUMBING PERMIT FROM THE CITY IS REQUIRED FOR SANITARY SEWER LATERALS BEYOND THE FIRST CLEANOUT.
8. ALL MATERIALS, INSTALLATION, TESTING AND INSPECTIONS TO BE IN STRICT ACCORDANCE WITH THE CITY OF WEST LINN PUBLIC WORK STANDARDS AND THE DEQ.

WATER NOTES:

1. WATER MAINS SHALL BE DUCTILE IRON PIPE CONFORMING TO AWWA C151, CLASS 52. PIPE IS TO HAVE CEMENT MORTAR LINING AND BITUMINOUS SEAL COAT CONFORMING TO AWWA C104. JOINTS ARE TO BE PUSH-ON RUBBER GASKETED JOINTS UNLESS OTHERWISE NOTED ON THE PLANS. PIPE FITTINGS ARE TO BE THE SAME MATERIAL AND CLASS AS THE PIPE AND OF DOMESTIC ORIGIN.
2. WATER MAINS TO HAVE A MINIMUM COVER OF 36-INCHES
3. ALL TEES, BEND (HORIZONTAL AND VERTICAL), OR SIGNIFICANT CHANGES IN DIRECTION IN ALIGNMENT SHALL BE RESTRAINED WITH FIELD LOCK GASKETS AND MEGA LUG FITTINGS (SEE SPEC. 4.0014).
4. GATE VALVES SHALL BE RESILIENT SEAT, NON-RISING STEM WITH "O" RING PACKING, MEETING AWWA CLASS "C" SPECIFICATIONS. THE VALVES SHALL BE DESIGNED TO WITHSTAND A WORKING PRESSURE OF 150 PSI. GATE VALVES SHALL HAVE A TWO-INCH SQUARE OPERATING NUT AND SHALL OPEN COUNTERCLOCKWISE WHEN VIEWED FROM ABOVE. BUTTERFLY VALVES (10-INCHES AND ABOVE) SHALL BE RUBBER SEAT TYPE AND BUBBLE-TIGHT AT 150 PSI, CONFORMING TO AWWA C504. BUTTERFLY VALVES SHALL BE MUELLER OR APPROVED EQUAL WITH THE 2-INCH OPERATING NUT BEING LOCATED ON THE SIDE OF THE MAIN SHOWN ON THE PLANS. VALVE BOXES SHALL BE "VANCOUVER" PATTERN.
5. GRANULAR BACKFILL (3/4"-0") IS TO BE COMPACTED TO 95% MAXIMUM DRY DENSITY PER AASHTO T-180 TEST METHOD AND NATIVE MATERIALS SHALL BE COMPACTED TO 95% OF IN-PLACE DRY DENSITY OF SURROUNDING SOIL. EXCAVATION, BEDDING AND BACKFILL SHALL BE IN ACCORDANCE WITH CITY OF WEST LINN STANDARD CONSTRUCTION SPECIFICATIONS, DIVISION 204. BACKFILL IN NEW STREETS SHALL BE CLASS B.
6. SERVICES SHALL BE 1-INCH, TYPE K, COPPER. FOR DOUBLE SERVICES TWO 1-INCH COPPER LINES SHALL BE INSTALLED SIDE BY SIDE. CORPORATION STOPS SHALL BE MULLER H 15008 OR FORD FI000 4Q, ANGLE STOPS SHALL BE MUELLER H 14256, OR FORD 1" KV43-444W-Q, METER BOXES SHALL BROOKS #37 WITH 37-S LID AND COVER, OR EQUAL. METER BOXES ARE TO BE INSTALLED ¾" ABOVE FINISH GRADE AND 2½" FORM THE CURB IN PLANTER STRIPS OR FLUSH WITH SIDEWALK SURFACE IN A SIDEWALK.
7. ALL WATERLINES SHALL BE PRESSURE TESTED AND BIOLOGICALLY TESTED BEFORE CONNECTION TO THE CITY WATER SYSTEM. CHLORINATION SHALL BE PER DIVISION 403.13 OF THE CITY OF WEST LINN CONSTRUCTION SPECIFICATIONS. PRESSURE TESTING SHALL BE IN ACCORDANCE WITH THE CITY OF WEST LINN STANDARD CONSTRUCTION SPECIFICATIONS, DIVISION 403.14. TEST PRESSURE WILL BE 180PSI OR 1.5 TIMES THE NORMAL WORKING PRESSURE, WHICHEVER IS HIGHER.
8. CONNECTION OF THE NEW PIPE SYSTEMS WILL NOT BE MADE UNTIL ALL TESTS ARE MADE AND THE CITY OF WEST LINN ACCEPTANCE.
9. A PLUMBING PERMIT IS REQUIRED FOR EXTENSIONS OF WATERLINES BEYOND THE METER.
10. ALL MATERIALS, INSTALLATION, TESTS, TO BE IN STRICT ACCORDANCE WITH THE CITY OF WEST LINN PUBLIC WORKS STANDARD CONSTRUCTION SPECIFICATIONS AND THE OREGON STATE HEALTH DIVISION ADMINISTRATION RULES, CHAPTER 333.
11. ALL SURPLUS APPURTENANCES SHALL BE RETURNED TO THE CITY OF WEST LINN WATER DEPARTMENT.

GENERAL NOTES

2015-129M

DESIGNED: BDG				
DRAWN: BJS				
SCALE: 1" = 60'				
DATE: March, 2016	04/10/2017	1	REVIEW PER INITIAL CITY REVIEW	
FILE: Rosemont Civil1	DATE	NO.	REVISION	

Theta, llc
ENGINEERING - SURVEYING - PLANNING
PO Box 1345
Lake Oswego, Oregon 97035
503/481-8822
email: thetaeng@comcast.net

Icon Construction & Development, LLC
1980 Willamette Falls Drive, Suite 200
West Linn, OR 97068
PH: (503) 657-0406

Tanner Ridge at Rosemont
1270 Rosemont Road
West Linn, Oregon

SHEET: C-3

F:\Acad\Rosemont\Rosemont Civil1.dwg, 4/14/2017 1:13:31 PM

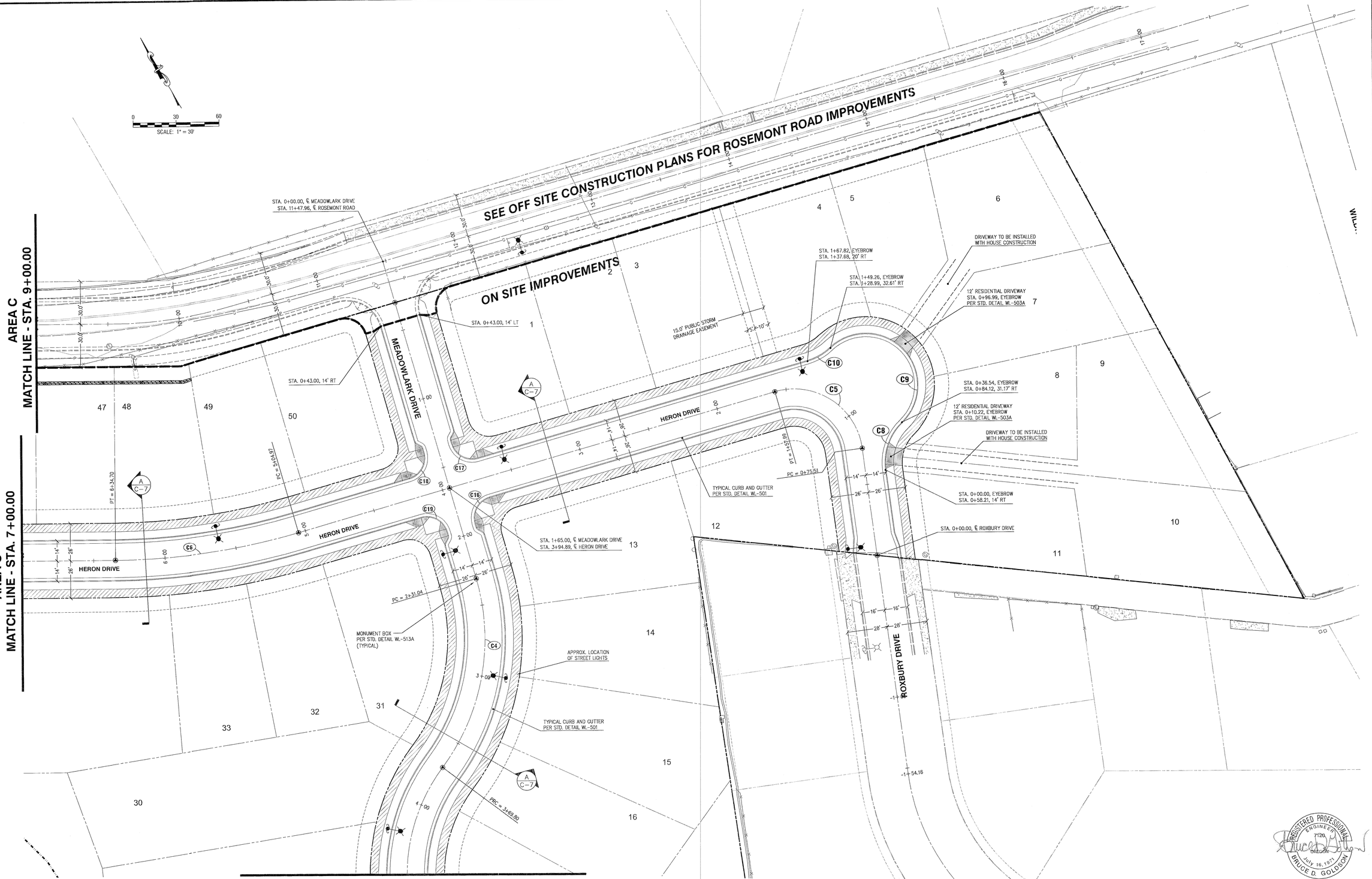

REGISTERED PROFESSIONAL ENGINEER
7120
OREGON
July 16, 1971
BRUCE D. GOLDSON

EXPIRES: 06/30/2017
SIGNATURE DATE: 05/25/2017

AREA A
SITE AND STREET PLAN

2015-129M

DESIGNED:	BDG			
DRAWN:	BJS			
SCALE:	1" = 60'	05/24/2017	2	MODIFICATION PER REVIEW BY CITY STAFF
DATE:	March, 2016	04/10/2017	1	REVIEW PER INITIAL CITY REVIEW
FILE:	Rosemont Civil1	DATE	NO.	REVISION

Theta, llc
ENGINEERING - SURVEYING - PLANNING
PO Box 1345
Lake Oswego, Oregon 97035
503/481-8822
email: thetaeng@comcast.net

Icon Construction & Development, LLC
1980 Willamette Falls Drive, Suite 200
West Linn, OR 97068
PH: (503) 657-0406

Tanner Ridge at Rosemont
1270 Rosemont Road
West Linn, Oregon

SHEET:
C--5

F:\Local\Rosemont\Rosemont Civil1.dwg, 5/25/2017 1:42:52 PM

MATCH LINE - STA. 5+50.00
AREA A

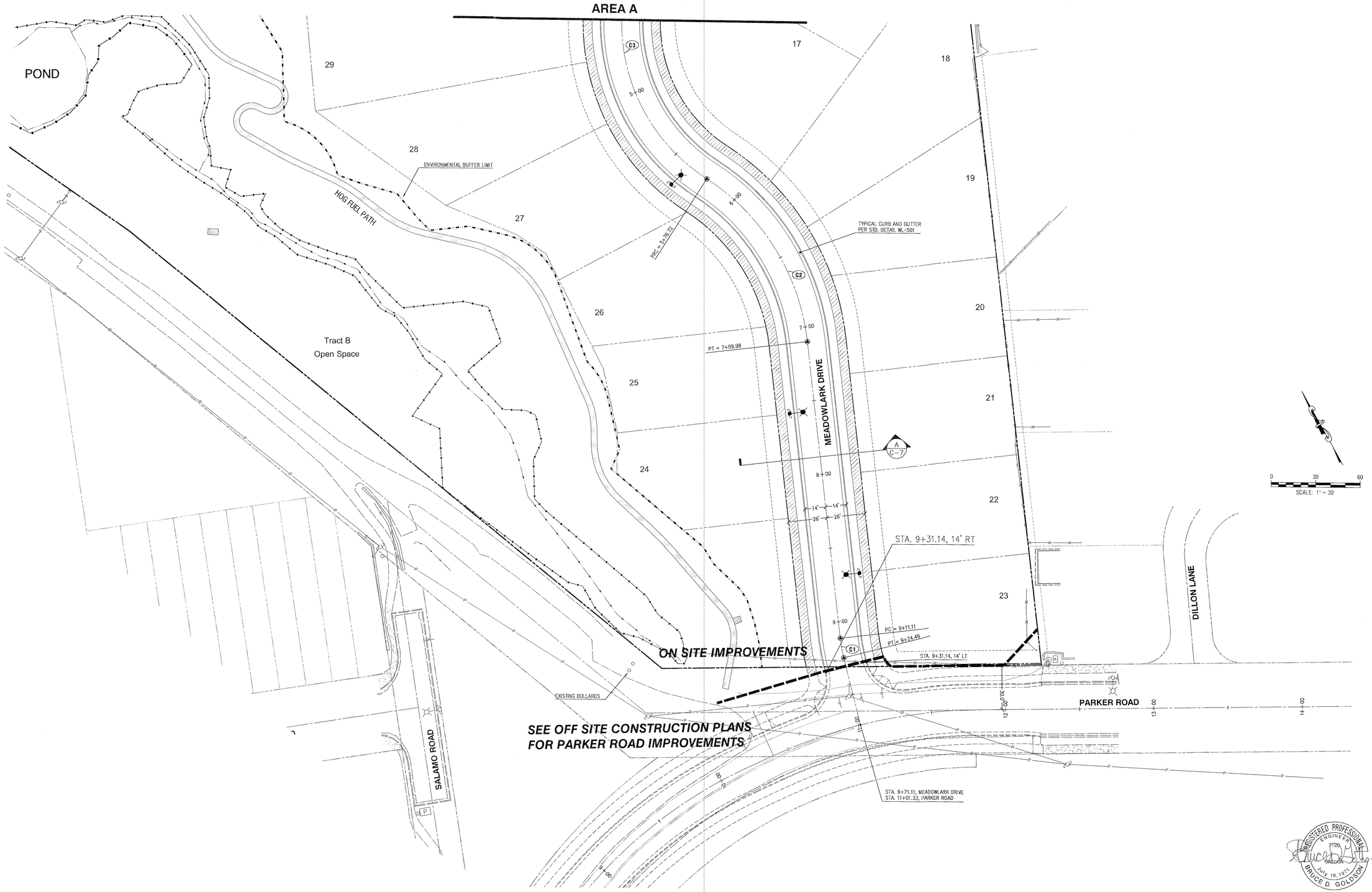

REGISTERED PROFESSIONAL ENGINEER
7126
OREGON
July 16, 1971
BRUCE D. GOLDSON

EXPIRES: 06/30/2017
SIGNATURE DATE: 05/25/2017

AREA B
SITE AND STREET PLAN

2015-129M

DESIGNED:	BDG			
DRAWN:	BJS			
SCALE:	1" = 60'	05/24/2017	2	MODIFICATION PER REVIEW BY CITY STAFF
DATE:	March, 2016	04/10/2017	1	REVIEW PER INITIAL CITY REVIEW
FILE:	Rosemont Civil1	DATE	NO.	REVISION

Theta, llc
ENGINEERING - SURVEYING - PLANNING
PO Box 1345
Lake Oswego, Oregon 97035
503/481-8822
email: thetaeng@comcast.net

Icon Construction & Development, LLC
1980 Willamette Falls Drive, Suite 200
West Linn, OR 97068
PH: (503) 657-0406

Tanner Ridge at Rosemont
1270 Rosemont Road
West Linn, Oregon

SHEET:
C-6

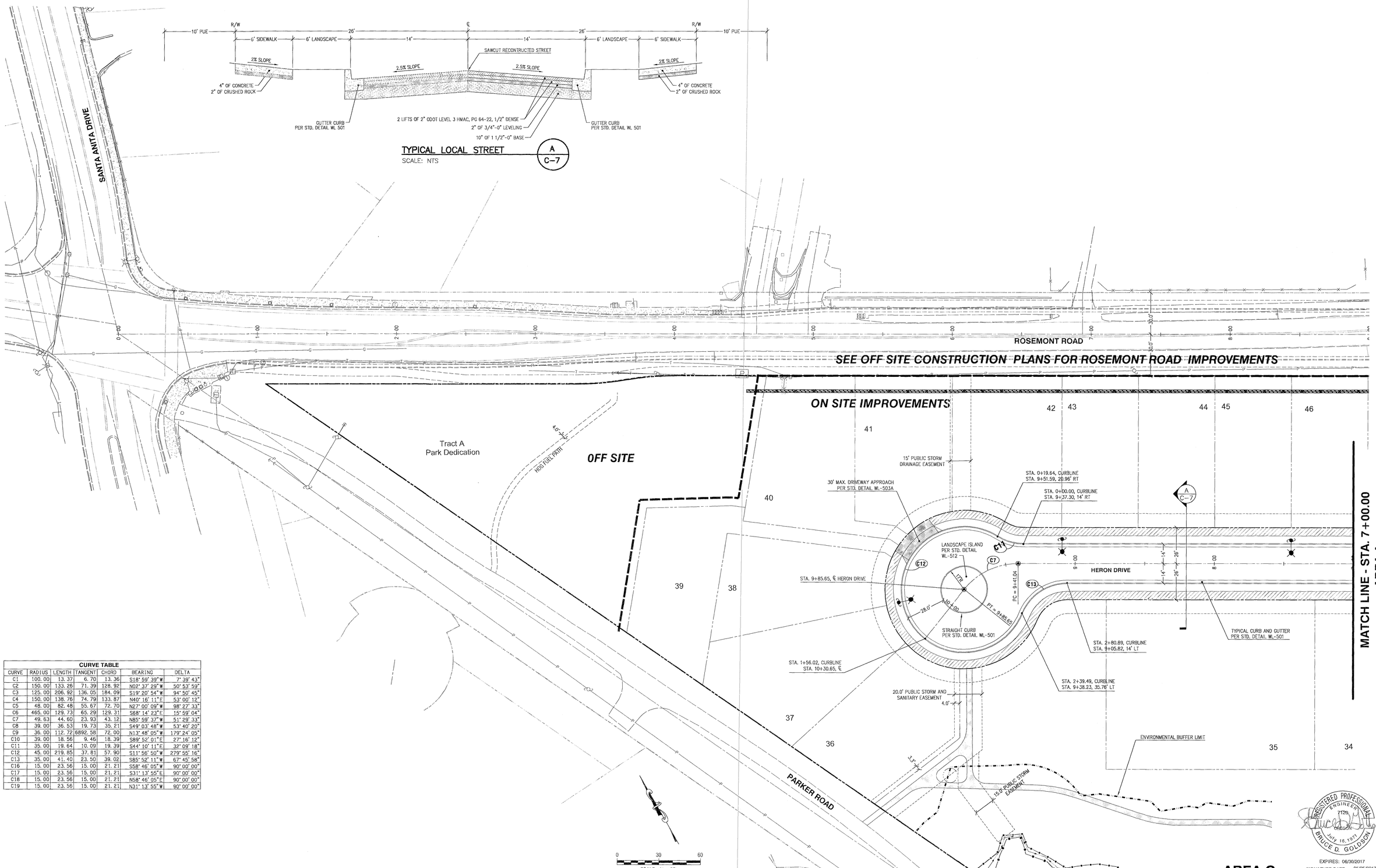

CURVE TABLE

CURVE	RADIUS	LENGTH	TANGENT	CHORD	BEARING	DELTA
C1	100.00	13.37	6.70	13.36	S18° 59' 39" W	7° 39' 43"
C2	150.00	133.26	71.39	128.92	N02° 37' 29" W	50° 53' 59"
C3	125.00	206.92	136.05	184.09	S19° 20' 54" W	94° 50' 45"
C4	150.00	138.76	74.79	133.87	N40° 16' 11" E	53° 00' 12"
C5	48.00	82.48	55.67	72.70	N27° 00' 09" W	98° 27' 33"
C6	465.00	129.73	65.29	129.31	S68° 14' 23" E	15° 59' 04"
C7	49.63	44.60	23.93	43.12	N85° 59' 37" W	51° 29' 33"
C8	39.00	36.53	19.73	35.21	S49° 03' 48" W	53° 40' 20"
C9	36.00	112.72	6892.58	72.00	N13° 48' 05" W	179° 24' 05"
C10	39.00	18.56	9.46	18.39	S89° 52' 01" E	27° 16' 12"
C11	35.00	19.64	10.09	19.39	S44° 10' 11" E	32° 09' 18"
C12	45.00	219.85	37.81	57.90	S11° 56' 50" W	279° 55' 16"
C13	35.00	41.40	23.50	39.02	S85° 52' 11" W	67° 45' 58"
C16	15.00	23.56	15.00	21.21	S58° 46' 05" W	90° 00' 00"
C17	15.00	23.56	15.00	21.21	S31° 13' 55" E	90° 00' 00"
C18	15.00	23.56	15.00	21.21	N58° 46' 05" E	90° 00' 00"
C19	15.00	23.56	15.00	21.21	N31° 13' 55" W	90° 00' 00"

REGISTERED PROFESSIONAL ENGINEER
7129
OREGON
JULY 16, 1971
BRUCE D. GOLDSON

EXPIRES: 06/30/2017
SIGNATURE DATE: 05/25/2017

AREA C
SITE AND STREET PLAN

2015-129M

DESIGNED:	BDG			
DRAWN:	BJS			
SCALE:	1" = 60'	05/24/2017	2	MODIFICATION PER REVIEW BY CITY STAFF
DATE:	March, 2016	04/10/2017	1	REVIEW PER INITIAL CITY REVIEW
FILE:	Rosemont Civil1	DATE	NO.	REVISION

Theta, llc
ENGINEERING - SURVEYING - PLANNING
PO Box 1345
Lake Oswego, Oregon 97035
503/481-8822
email: thetaeng@comcast.net

Icon Construction & Development, LLC
1980 Willamette Falls Drive, Suite 200
West Linn, OR 97068
PH: (503) 657-0406

Tanner Ridge at Rosemont
1270 Rosemont Road
West Linn, Oregon

SHEET:
C-7

F:\Acad\Rosemont\Rosemont Civil.dwg, 6/25/2017 1:40:08 PM

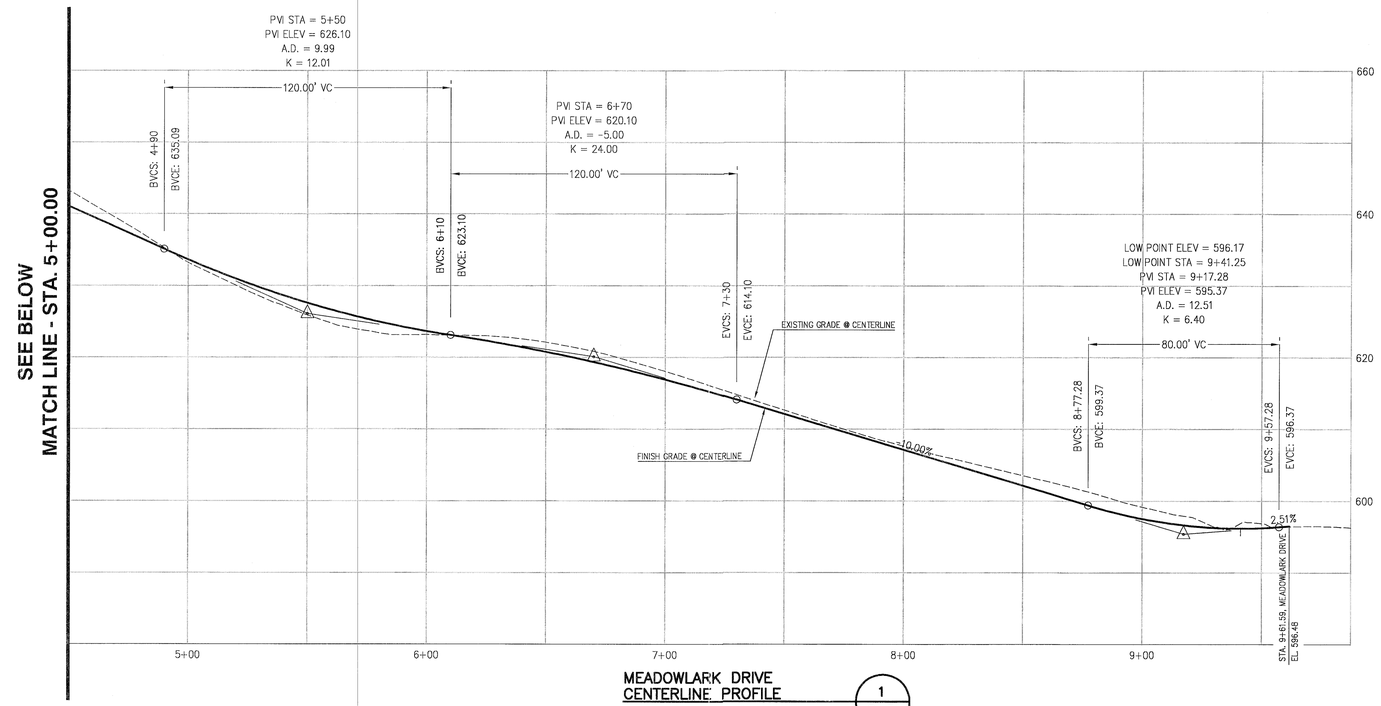

MEADOWLARK DRIVE
CENTERLINE PROFILE (1 / C-8)
SCALE: 1" = 30' HORIZONTAL
1" = 10' VERTICAL

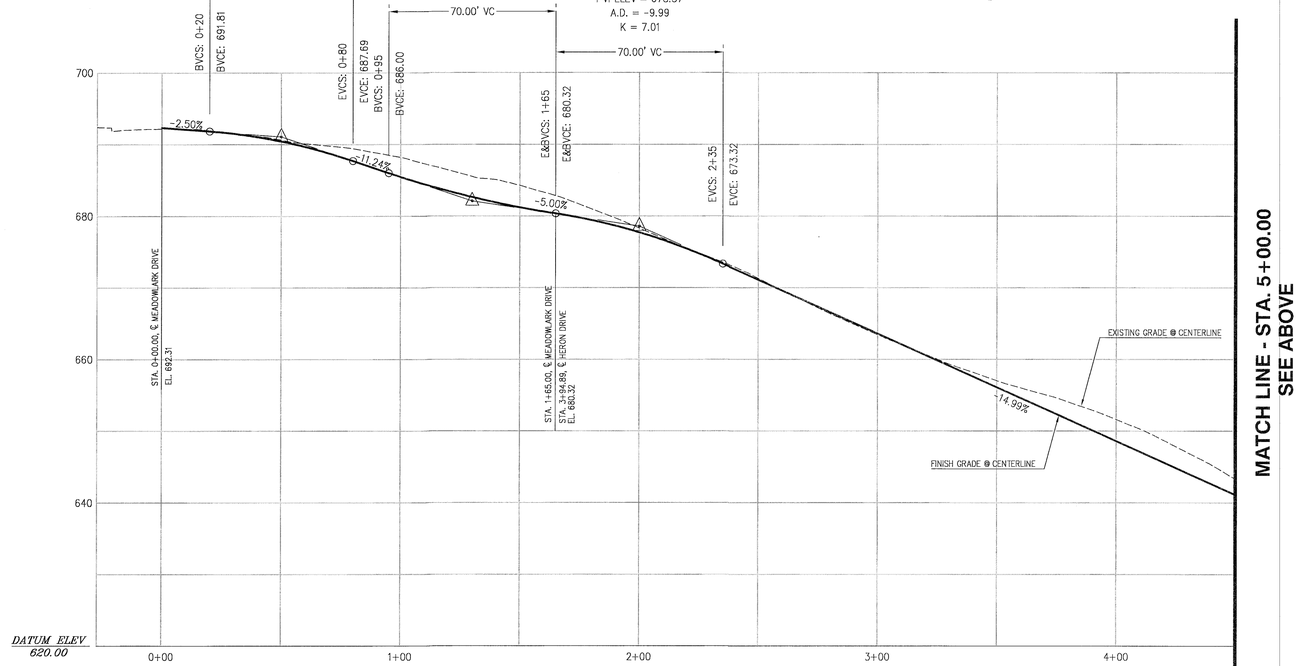

MATCH LINE - STA. 5+00.00
SEE ABOVE

MEADOWLARK DRIVE
CENTERLINE PROFILE (1 / C-8)
SCALE: 1" = 30' HORIZONTAL
1" = 10' VERTICAL

REGISTERED PROFESSIONAL ENGINEER 7120 OREGON July 16, 1971 BRUCE D. GOLDSON

EXPIRES: 06/30/2017
SIGNATURE DATE: 05/25/2017

STREET PROFILES 1

2015-129M

DESIGNED:	BDG			
DRAWN:	BJS			
SCALE:	1" = 60'	05/24/2017	2	MODIFICATION PER REVIEW BY CITY STAFF
DATE:	March, 2016	04/10/2017	1	REVIEW PER INITIAL CITY REVIEW
FILE:	Rosemont Civil1	DATE	NO.	REVISION

Theta, llc
ENGINEERING - SURVEYING - PLANNING
PO Box 1345
Lake Oswego, Oregon 97035
503/481-8822
email: thetaeng@comcast.net

Icon Construction & Development, LLC
1980 Willamette Falls Drive, Suite 200
West Linn, OR 97068
PH: (503) 657-0406

Tanner Ridge at Rosemont
1270 Rosemont Road
West Linn, Oregon

SHEET: C-8

F:\Acad\Rosemont\Rosemont Civil1.dwg, 5/25/2017 1:05:43 PM

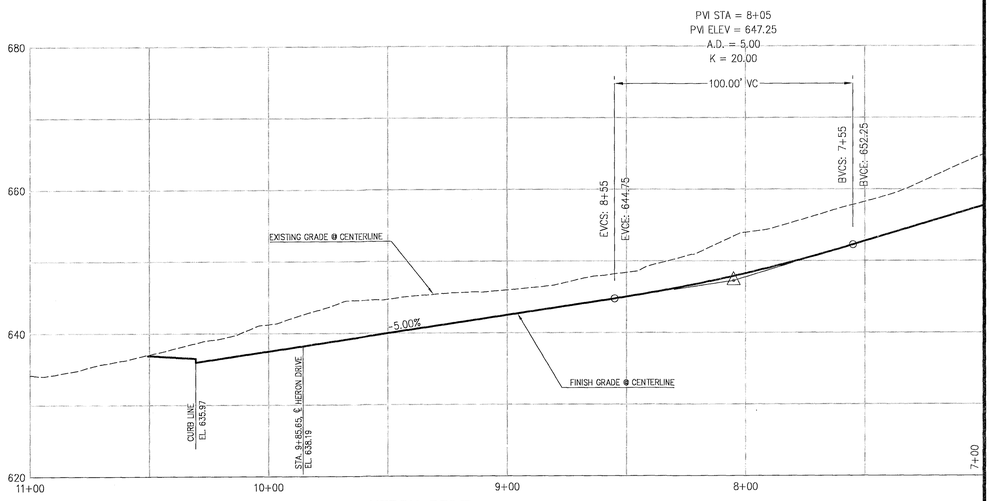

SEE BELOW
MATCH LINE - STA. 7+00.00

HERON DRIVE
CENTERLINE PROFILE (1 / C-9)
SCALE: 1" = 30' HORIZONTAL
1" = 10' VERTICAL

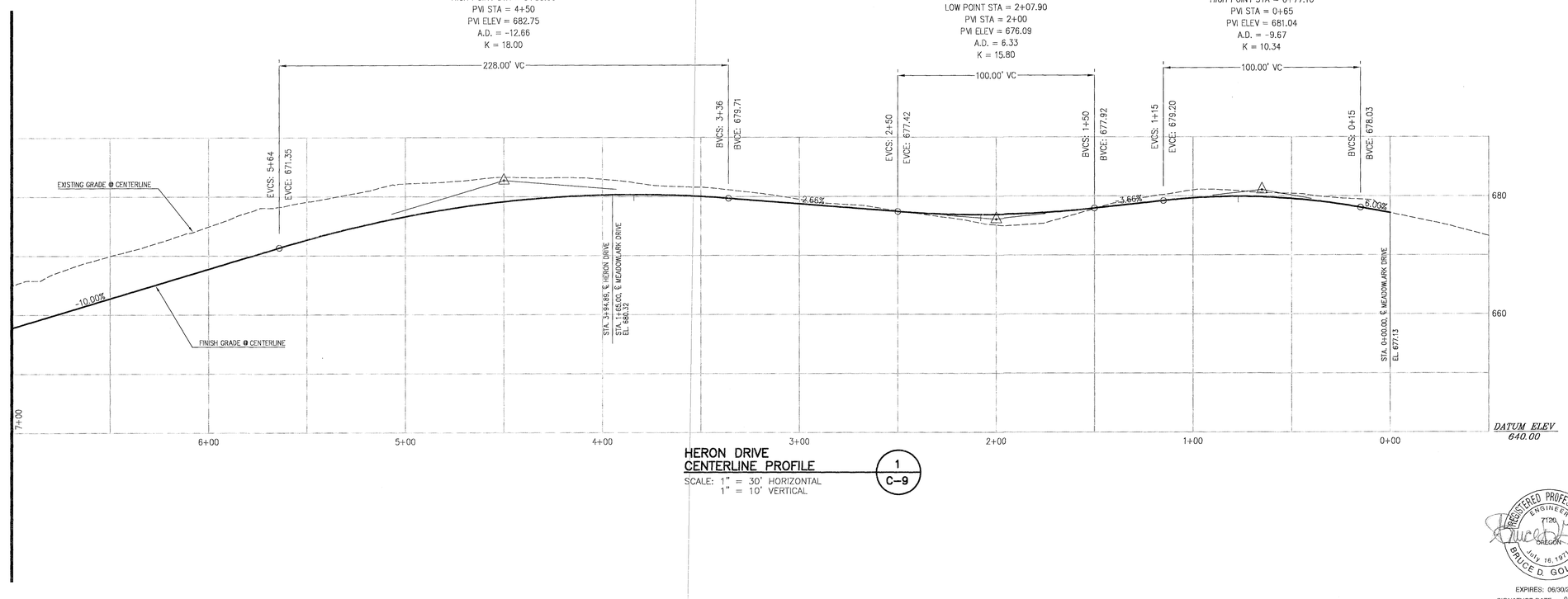

SEE ABOVE
MATCH LINE - STA. 7+00.00

HERON DRIVE
CENTERLINE PROFILE (1 / C-9)
SCALE: 1" = 30' HORIZONTAL
1" = 10' VERTICAL

REGISTERED PROFESSIONAL ENGINEER
7120
OREGON
July 16, 1971
BRUCE D. GOLDSON

EXPIRES: 06/30/2017
SIGNATURE DATE: 05/25/2017

STREET PROFILES 2

2015-129M

DESIGNED:	BDG			
DRAWN:	BJS			
SCALE:	1" = 60'	05/24/2017	2	MODIFICATION PER REVIEW BY CITY STAFF
DATE:	March, 2016	04/10/2017	1	REVIEW PER INITIAL CITY REVIEW
FILE:	Rosemont Civil1	DATE	NO.	REVISION

Theta, llc
ENGINEERING - SURVEYING - PLANNING
PO Box 1345
Lake Oswego, Oregon 97035
503/481-8822
email: thetaeng@comcast.net

Icon Construction & Development, LLC
1980 Willamette Falls Drive, Suite 200
West Linn, OR 97068
PH: (503) 657-0406

Tanner Ridge at Rosemont
1270 Rosemont Road
West Linn, Oregon

SHEET: C-9

F:\Acad\Rosemont\Rosemont Civil 1.dwg, 5/25/2017 1:05:07 PM

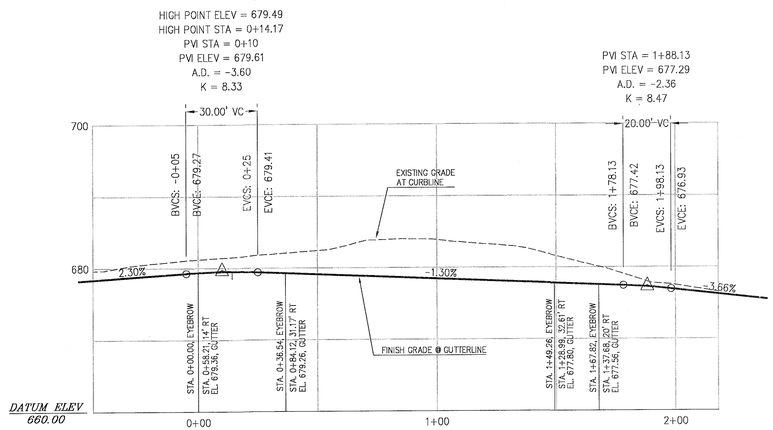

EYEBROW CURBLINE GUTTERLINE PROFILE (3 / C-10)

SCALE: 1" = 30' HORIZONTAL
1" = 10' VERTICAL

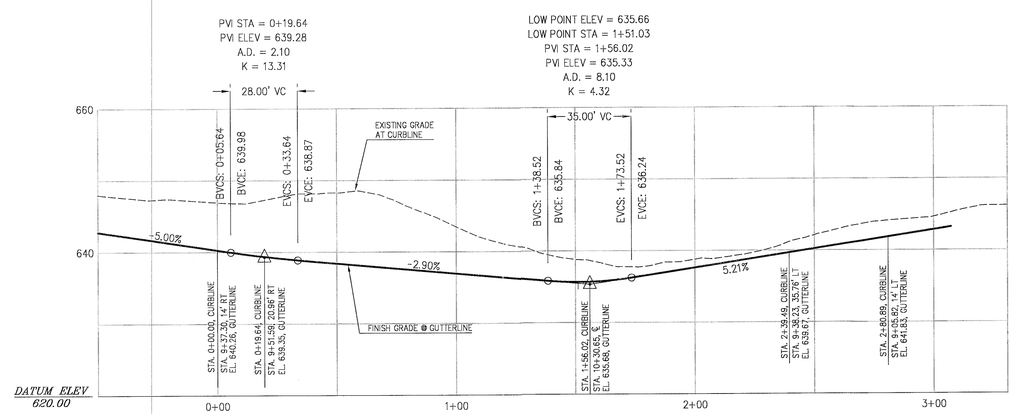

CUL-DE-SAC CURBLINE GUTTERLINE PROFILE (2 / C-10)

SCALE: 1" = 30' HORIZONTAL
1" = 10' VERTICAL

REGISTERED PROFESSIONAL ENGINEER 7126 OREGON July 16, 1971 BRUCE D. GOLDSON

EXPIRES: 06/30/2017
SIGNATURE DATE: 05/25/2017

STREET PROFILES 4

2015-129M

DESIGNED:	BDG			
DRAWN:	BJS			
SCALE:	1" = 60'	05/24/2017	2	MODIFICATION PER REVIEW BY CITY STAFF
DATE:	March, 2016	04/10/2017	1	REVIEW PER INITIAL CITY REVIEW
FILE:	Rosemont Civil1	DATE	NO.	REVISION

Theta, llc
ENGINEERING - SURVEYING - PLANNING
PO Box 1345
Lake Oswego, Oregon 97035
503/481-8822
email: thetaeng@comcast.net

Icon Construction & Development, LLC
1980 Willamette Falls Drive, Suite 200
West Linn, OR 97068
PH: (503) 657-0406

Tanner Ridge at Rosemont
1270 Rosemont Road
West Linn, Oregon

SHEET: C-10

F:\Acad\Rosemont\Rosemont Civil.dwg, 6/26/2017 1:40:28 PM

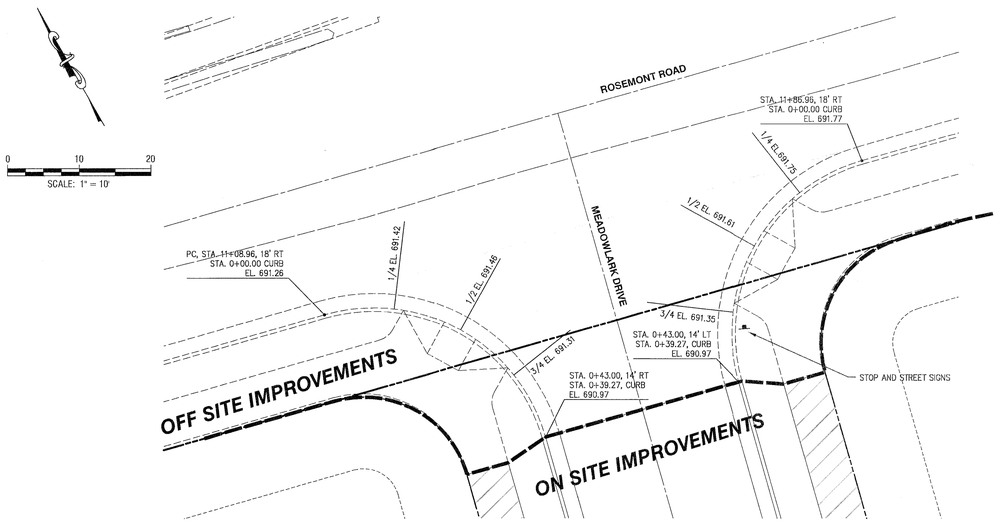

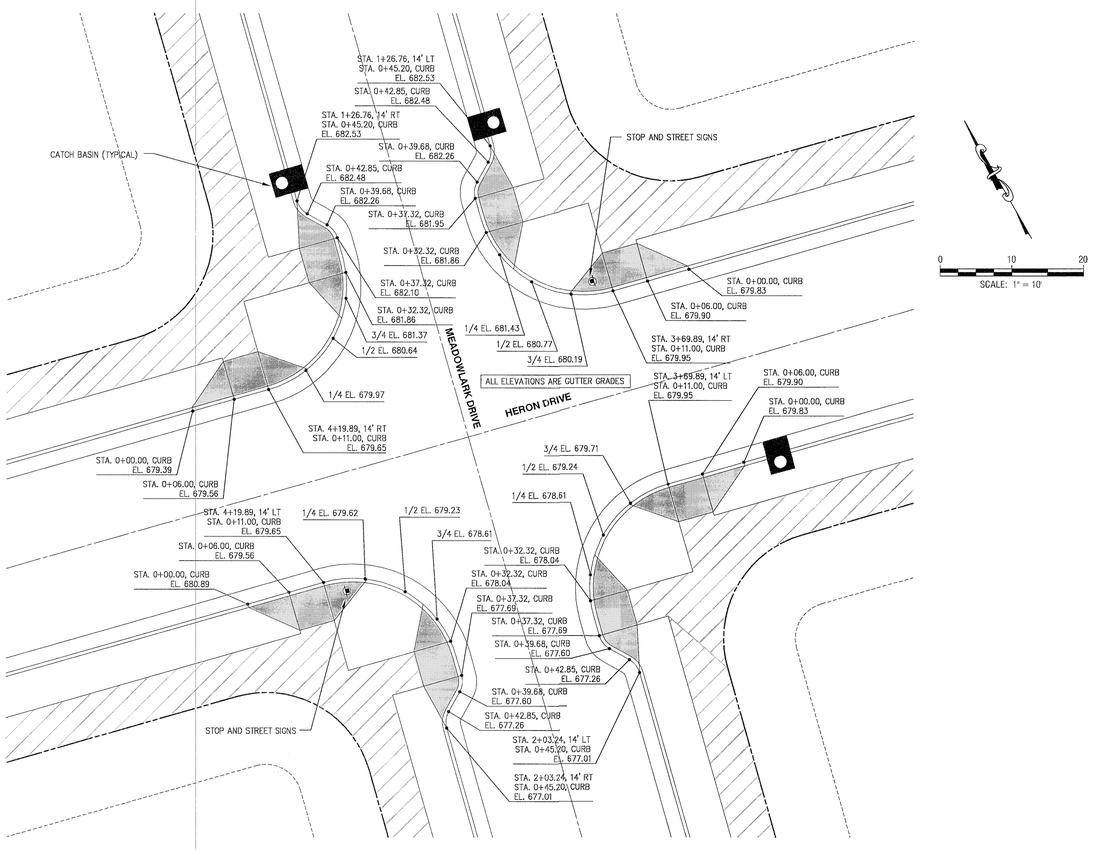

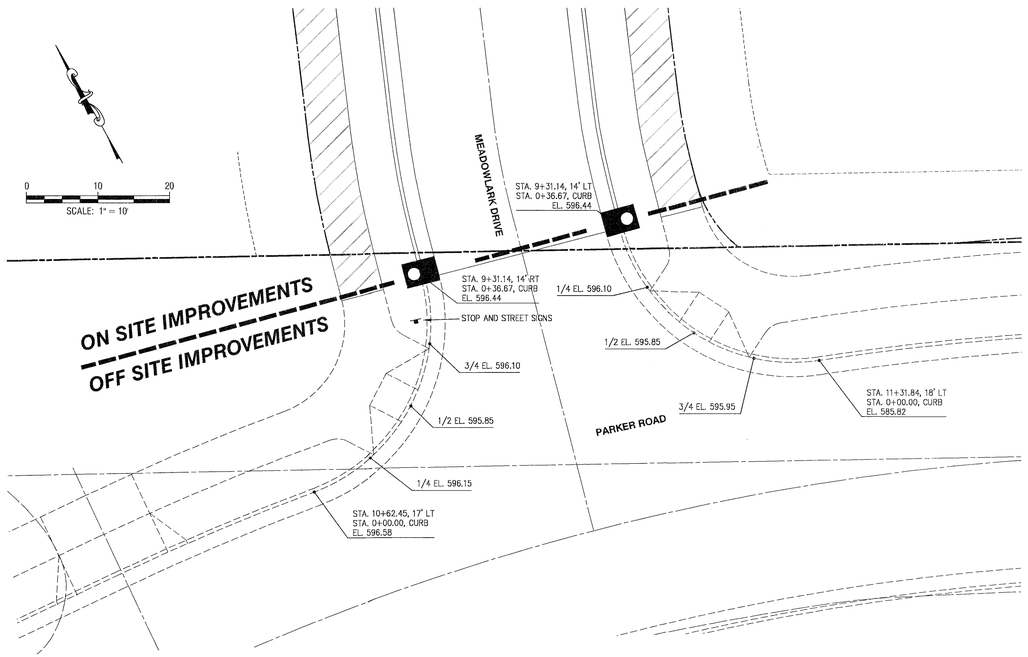

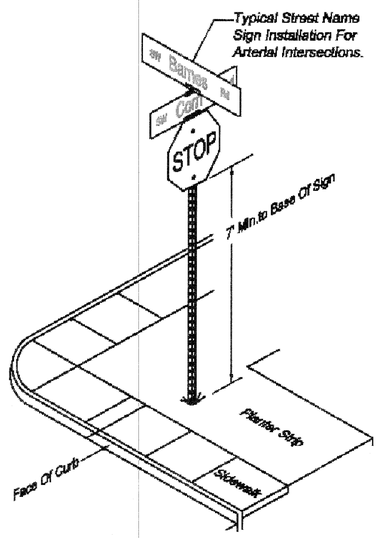

STREET NAME SIGNS

SCALE: NTS

SIGNATE PER MANUAL OF UNIFORM TRAFFIC CONTROL DEVISES (MUTCD) CITY OF WEST LINN STANDARDS.

NOTE: MEADOWLARK HAS TRAFFIC CONTROL STOP SIGNS FOR TRAFFIC CALMING PER CONDITION 12.

EXPIRES: 06/30/2017
SIGNATURE DATE: 05/25/2017

SIGNAGE AND INTERSECTION DETAILS

2015-129M

DESIGNED:	BDG			
DRAWN:	BJS			
SCALE:	1" = 60'	05/24/2017	2	MODIFICATION PER REVIEW BY CITY STAFF
DATE:	March, 2016	04/10/2017	1	REVIEW PER INITIAL CITY REVIEW
FILE:	Rosemont Civil1	DATE	NO.	REVISION

Theta, llc
ENGINEERING - SURVEYING - PLANNING
PO Box 1345
Lake Oswego, Oregon 97035
503/481-8822
email: thetaeng@comcast.net

Icon Construction & Development, LLC
1980 Willamette Falls Drive, Suite 200
West Linn, OR 97068
PH: (503) 657-0406

Tanner Ridge at Rosemont
1270 Rosemont Road
West Linn, Oregon

SHEET: C-11

F:\Acad\Rosemont\Rosemont Civil1.dwg, 5/25/2017 1:46:51 PM

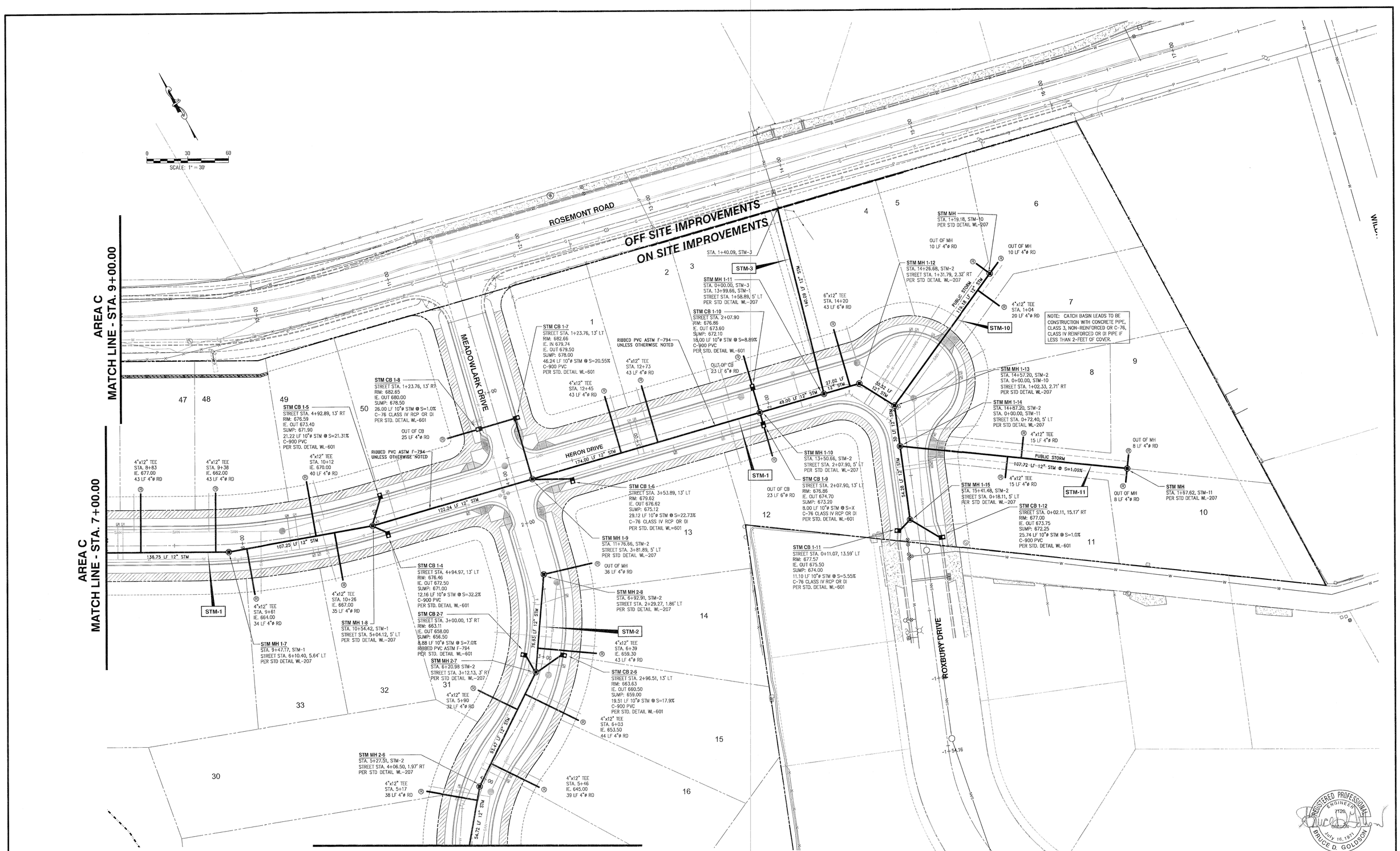

REGISTERED PROFESSIONAL ENGINEER
OREGON
July 16, 1971
BRUCE D. GOLDSON

EXPIRES: 06/30/2017
SIGNATURE DATE: 05/25/2017

AREA A
STORM DRAINAGE PLAN

2015-129M

DESIGNED:	BDG			
DRAWN:	BJS			
SCALE:	1" = 60'	05/24/2017	2	MODIFICATION PER REVIEW BY CITY STAFF
DATE:	March, 2016	04/10/2017	1	REVIEW PER INITIAL CITY REVIEW
FILE:	Rosemont Civil1	DATE	NO.	REVISION

Theta, llc
ENGINEERING - SURVEYING - PLANNING
PO Box 1345
Lake Oswego, Oregon 97035
503/481-8822
email: thetaeng@comcast.net

Icon Construction & Development, LLC
1980 Willamette Falls Drive, Suite 200
West Linn, OR 97068
PH: (503) 657-0406

Tanner Ridge at Rosemont
1270 Rosemont Road
West Linn, Oregon

SHEET:
C-12

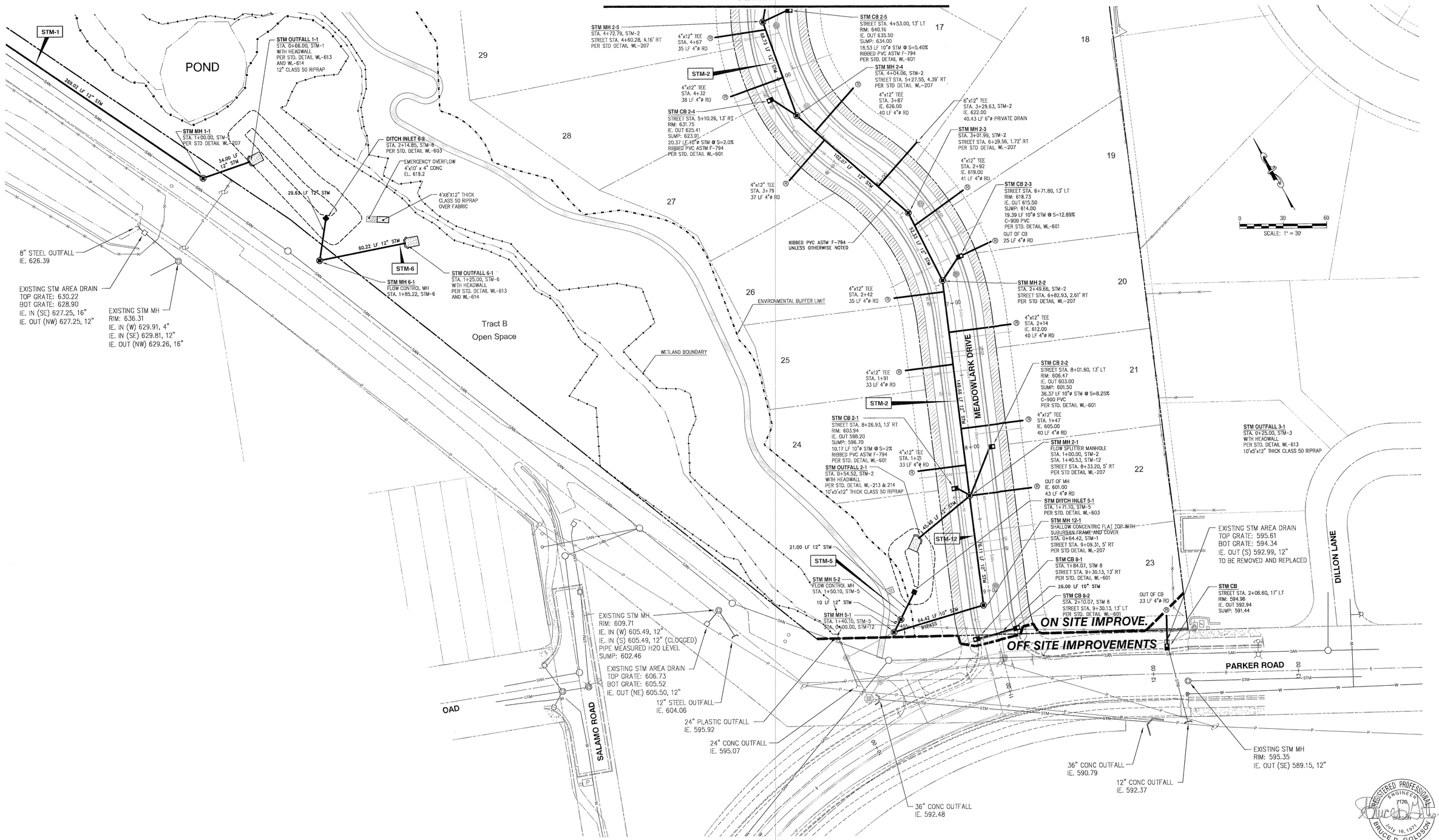

AREA B
STORM DRAINAGE PLAN

2015-129M

DESIGNED:	BDG			
DRAWN:	BJS			
SCALE:	1" = 60'	05/24/2017	2	MODIFICATION PER REVIEW BY CITY STAFF
DATE:	March, 2016	04/10/2017	1	REVIEW PER INITIAL CITY REVIEW
FILE:	Rosemont Civil1	DATE	NO.	REVISION

Theta, llc
ENGINEERING - SURVEYING - PLANNING
PO Box 1345
Lake Oswego, Oregon 97035
503/481-8822
email: thetaeng@comcast.net

Icon Construction & Development, LLC
1980 Willamette Falls Drive, Suite 200
West Linn, OR 97068
PH: (503) 657-0406

Tanner Ridge at Rosemont
1270 Rosemont Road
West Linn, Oregon

SHEET:
C-13

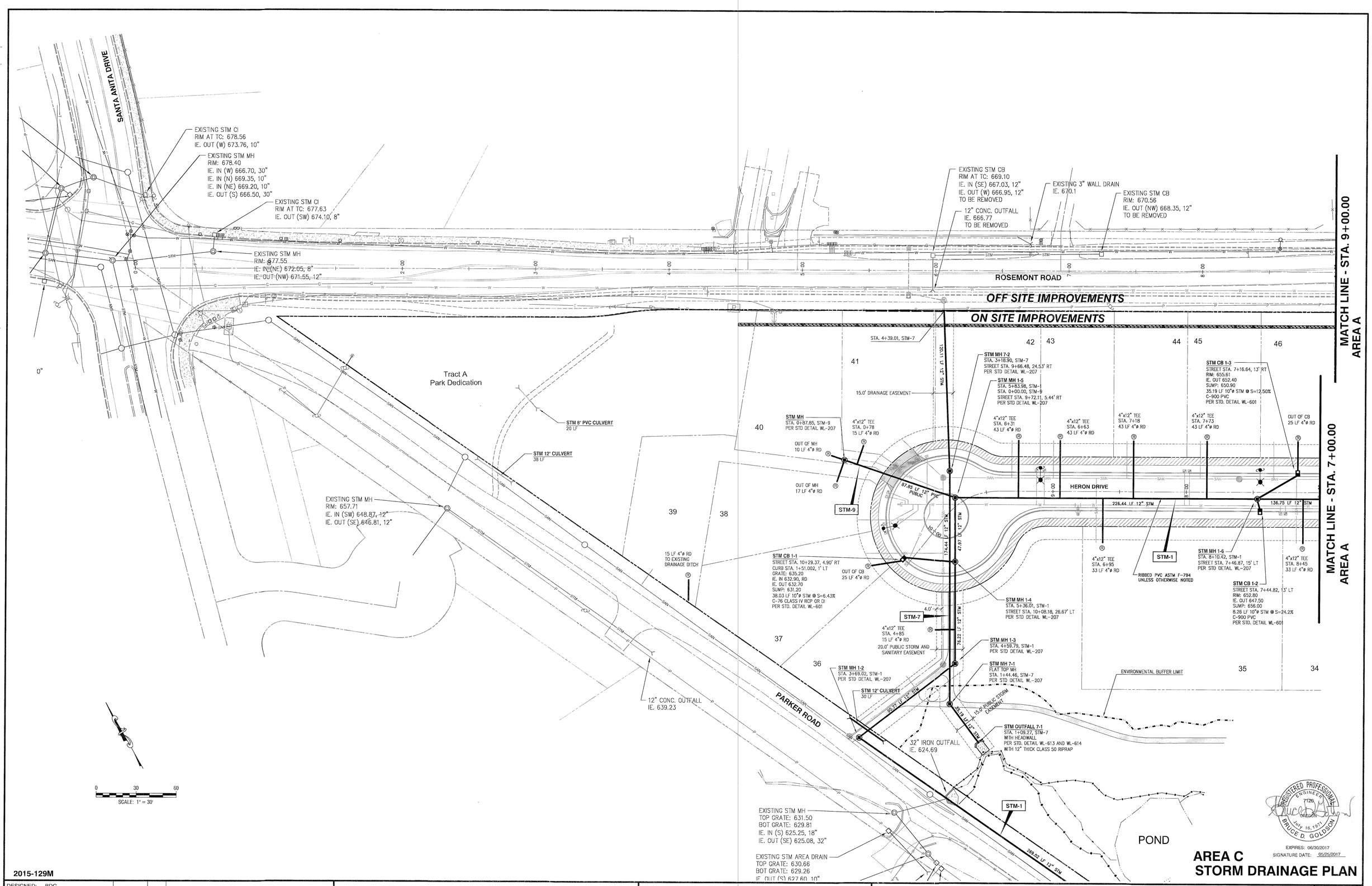

REGISTERED PROFESSIONAL ENGINEER
7120
OREGON
July 16, 1971
BRUCE D. GOLDSON

EXPIRES: 06/30/2017
SIGNATURE DATE: 05/25/2017

AREA C
STORM DRAINAGE PLAN

2015-129M

DESIGNED:	BDG			
DRAWN:	BJS			
SCALE:	1" = 60'	05/24/2017	2	MODIFICATION PER REVIEW BY CITY STAFF
DATE:	March, 2016	04/10/2017	1	REVIEW PER INITIAL CITY REVIEW
FILE:	Rosemont Civil1	DATE	NO.	REVISION

Theta, llc
ENGINEERING - SURVEYING - PLANNING
PO Box 1345
Lake Oswego, Oregon 97035
503/481-8822
email: thetaeng@comcast.net

Icon Construction & Development, LLC
1980 Willamette Falls Drive, Suite 200
West Linn, OR 97068
PH: (503) 657-0406

Tanner Ridge at Rosemont
1270 Rosemont Road
West Linn, Oregon

SHEET:
C-14

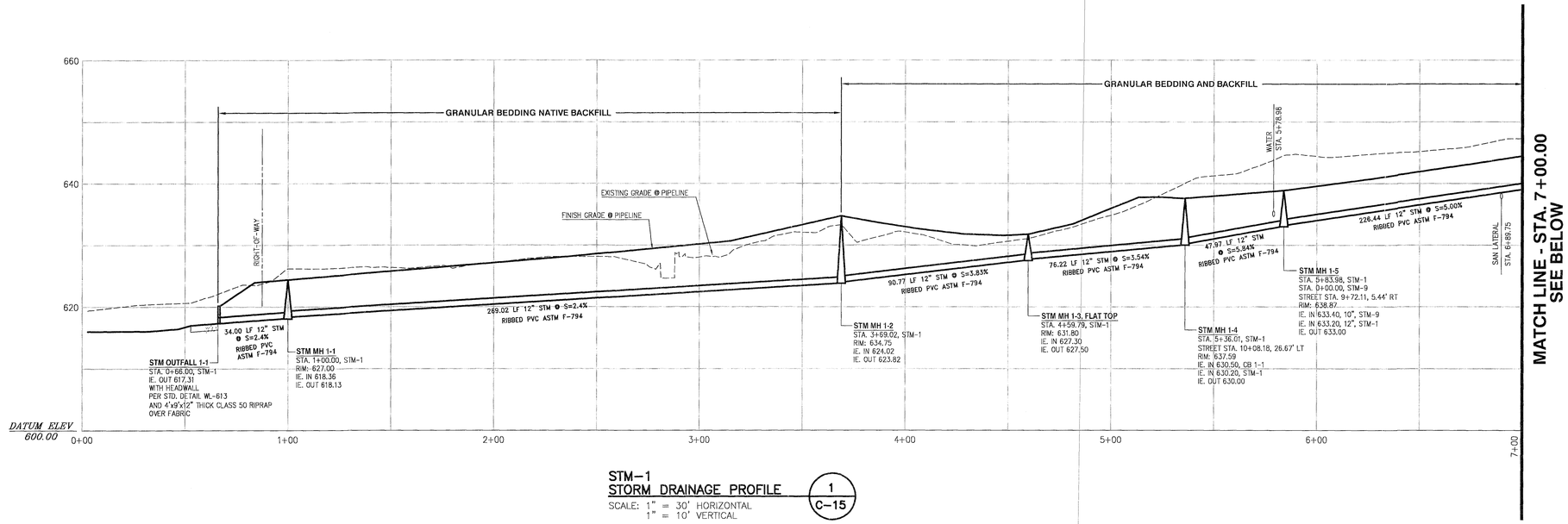

MATCH LINE - STA. 7+00.00
SEE BELOW

STM-1
STORM DRAINAGE PROFILE (1 / C-15)
SCALE: 1" = 30' HORIZONTAL
1" = 10' VERTICAL

MATCH LINE - STA. 7+00.00
SEE ABOVE

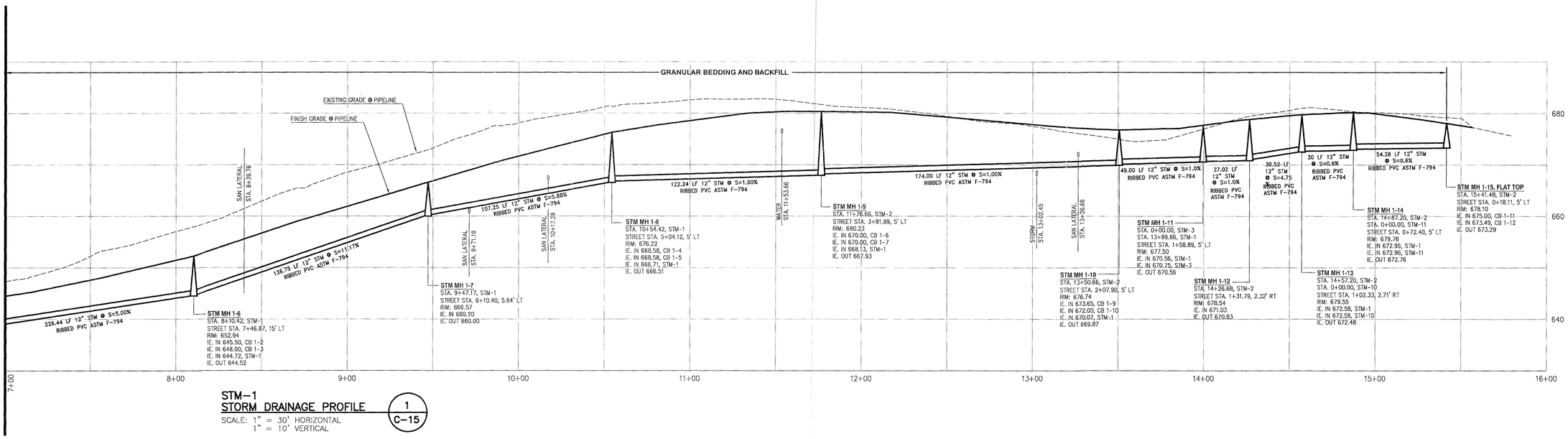

STM-1
STORM DRAINAGE PROFILE (1 / C-15)
SCALE: 1" = 30' HORIZONTAL
1" = 10' VERTICAL

REGISTERED PROFESSIONAL ENGINEER
7120
OREGON
JULY 16, 1971
BRUCE D. GOLDSON

EXPIRES: 06/30/2017
SIGNATURE DATE: 05/25/2017

STORM DRAINAGE PROFILE STM-1

2015-129M

DESIGNED:	BDG			
DRAWN:	BJS			
SCALE:	1" = 60'	05/24/2017	2	MODIFICATION PER REVIEW BY CITY STAFF
DATE:	March, 2016	04/10/2017	1	REVIEW PER INITIAL CITY REVIEW
FILE:	Rosemont Civil1	DATE	NO.	REVISION

Theta, llc
ENGINEERING - SURVEYING - PLANNING
PO Box 1345
Lake Oswego, Oregon 97035
503/481-8822
email: thetaeng@comcast.net

Icon Construction & Development, LLC
1980 Willamette Falls Drive, Suite 200
West Linn, OR 97068
PH: (503) 657-0406

Tanner Ridge at Rosemont
1270 Rosemont Road
West Linn, Oregon

SHEET: C-15

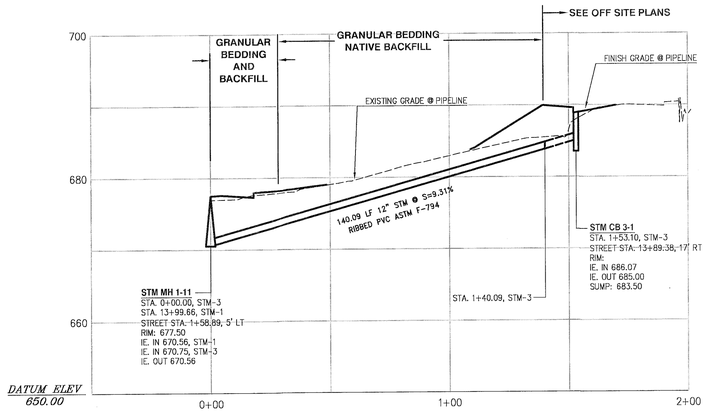

STM–3
STORM DRAINAGE PROFILE (3 / C–16)
SCALE: 1" = 30' HORIZONTAL
1" = 10' VERTICAL

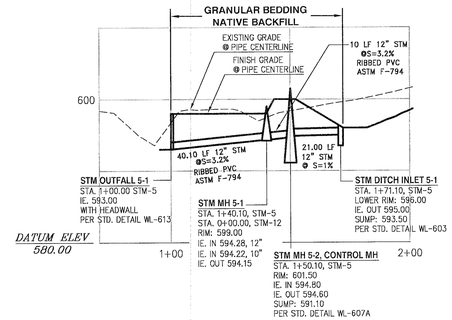

STM–5
STORM DRAINAGE PROFILE (5 / C–16)
SCALE: 1" = 30' HORIZONTAL
1" = 10' VERTICAL

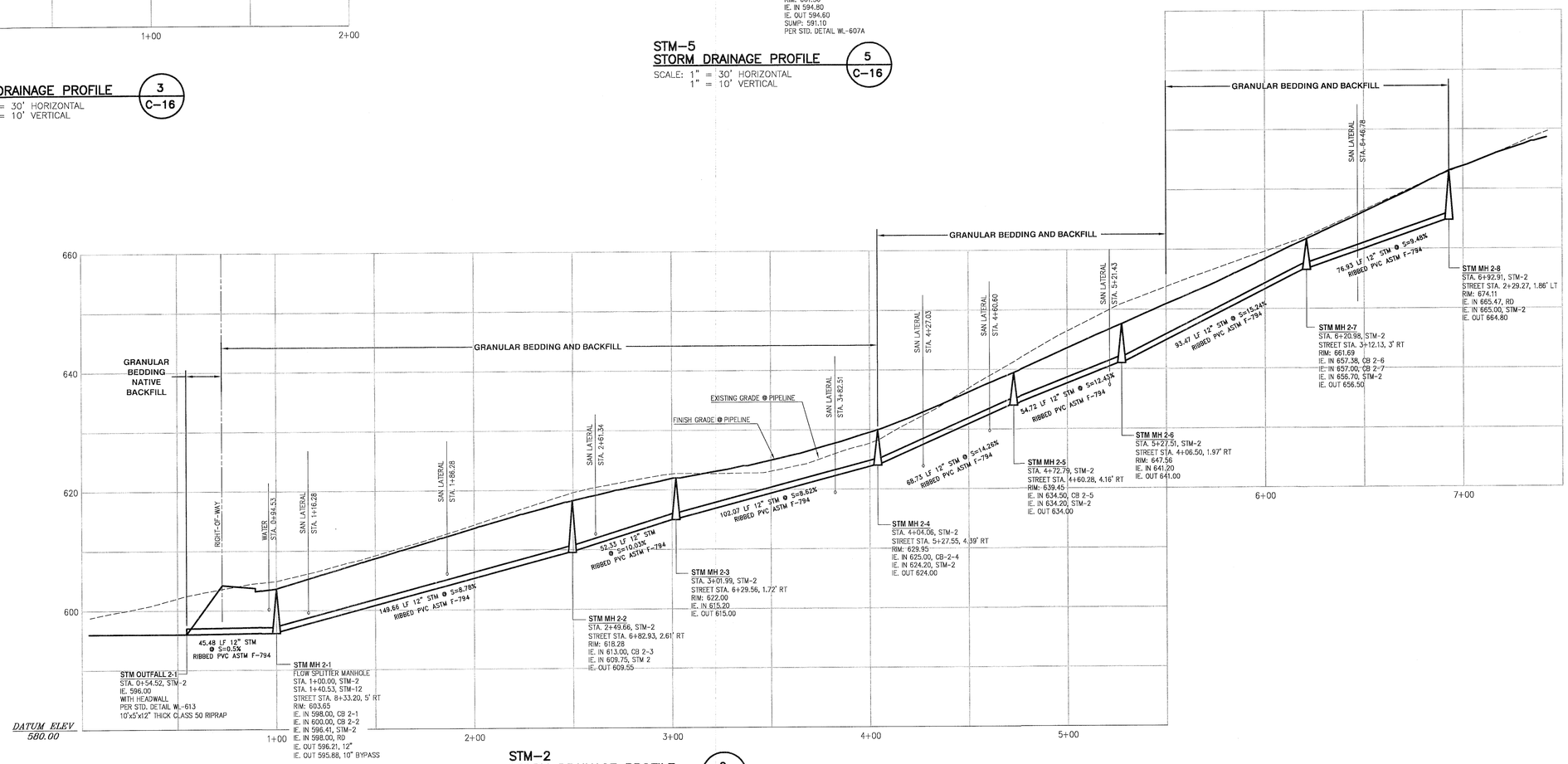

STM–2
STORM DRAINAGE PROFILE (2 / C–16)
SCALE: 1" = 30' HORIZONTAL
1" = 10' VERTICAL

REGISTERED PROFESSIONAL ENGINEER
7120
OREGON
JULY 18, 1971
BRUCE D. GOLDSON

EXPIRES: 06/30/2017
SIGNATURE DATE: 05/25/2017

STORM DRAINAGE PROFILES STM-2,3,5

2015-129M

DESIGNED:	BDG			
DRAWN:	BJS			
SCALE:	1" = 60'	05/24/2017	2	MODIFICATION PER REVIEW BY CITY STAFF
DATE:	March, 2016	04/10/2017	1	REVIEW PER INITIAL CITY REVIEW
FILE:	Rosemont Civil1	DATE	NO.	REVISION

Theta, llc
ENGINEERING - SURVEYING - PLANNING
PO Box 1345
Lake Oswego, Oregon 97035
503/481-8822
email: thetaeng@comcast.net

Icon Construction & Development, LLC
1980 Willamette Falls Drive, Suite 200
West Linn, OR 97068
PH: (503) 657-0406

Tanner Ridge at Rosemont
1270 Rosemont Road
West Linn, Oregon

SHEET: C-16

F:\Acad\Rosemont\Rosemont Civil1.dwg, 6/25/2017 10:54:57 PM

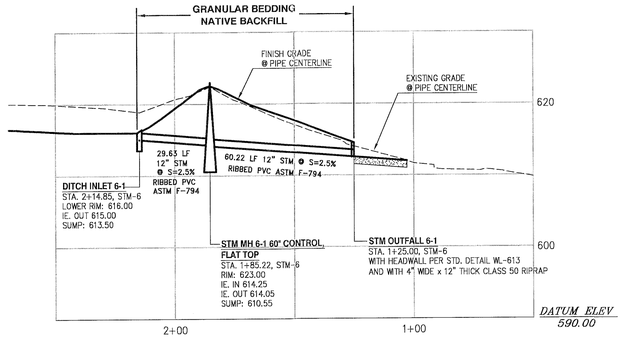

STM-6
STORM DRAINAGE PROFILE

6 / C-17

SCALE: 1" = 30' HORIZONTAL
1" = 10' VERTICAL

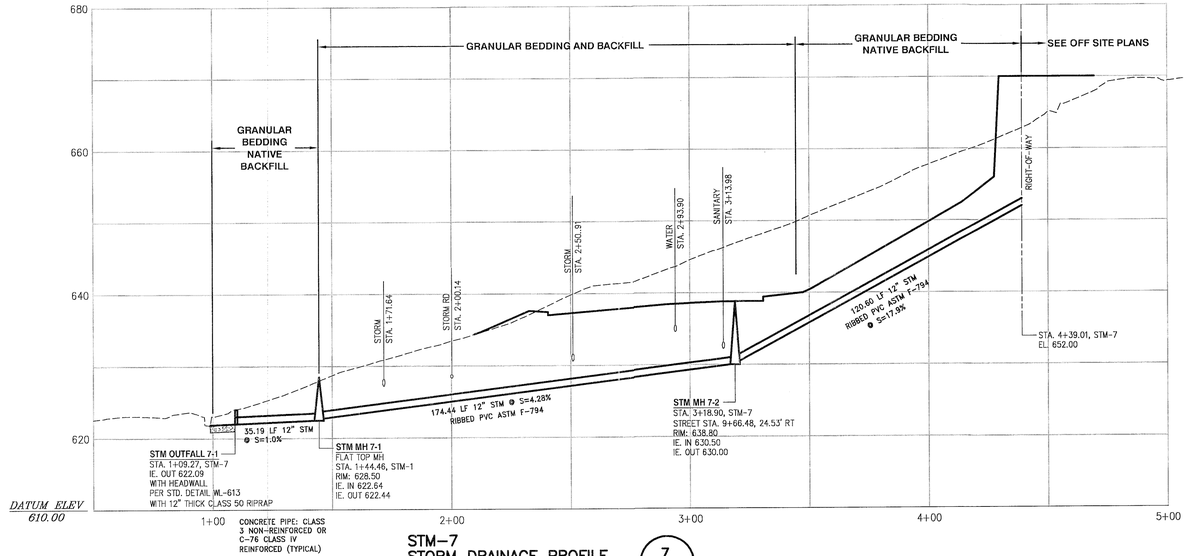

STM-7
STORM DRAINAGE PROFILE

7 / C-17

SCALE: 1" = 30' HORIZONTAL
1" = 10' VERTICAL

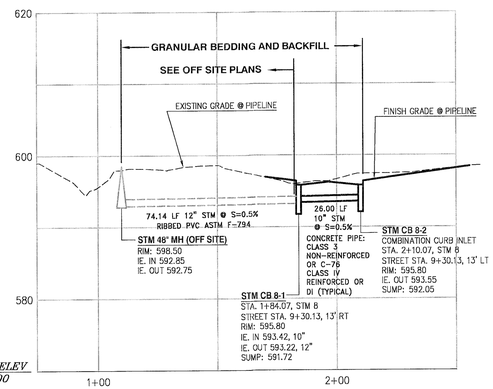

STM-8
STORM DRAINAGE PROFILE

8 / C-17

SCALE: 1" = 30' HORIZONTAL
1" = 10' VERTICAL

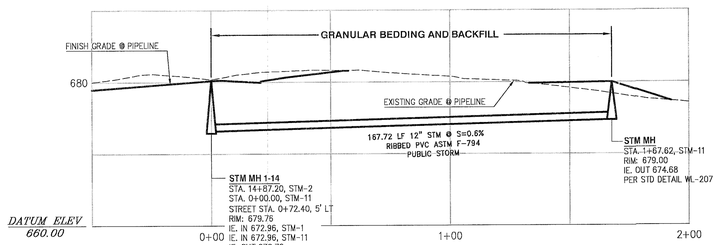

STM-11
STORM DRAINAGE PROFILE

11 / C-18

SCALE: 1" = 30' HORIZONTAL
1" = 10' VERTICAL

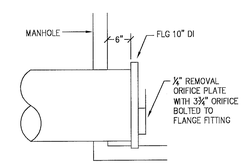

BYPASS DETAIL

SCALE: NTS

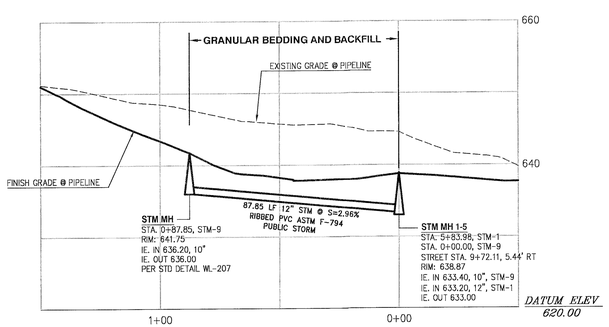

STM-9
STORM DRAINAGE PROFILE

9 / C-18

SCALE: 1" = 30' HORIZONTAL
1" = 10' VERTICAL

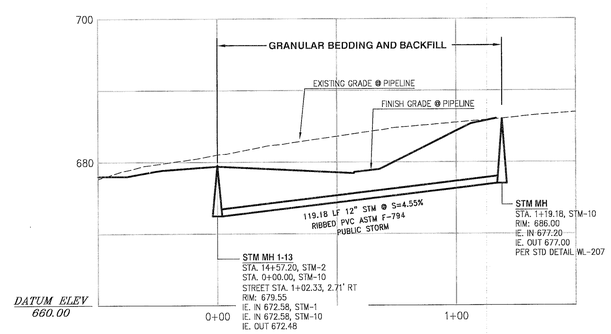

STM-10
STORM DRAINAGE PROFILE

10 / C-18

SCALE: 1" = 30' HORIZONTAL
1" = 10' VERTICAL

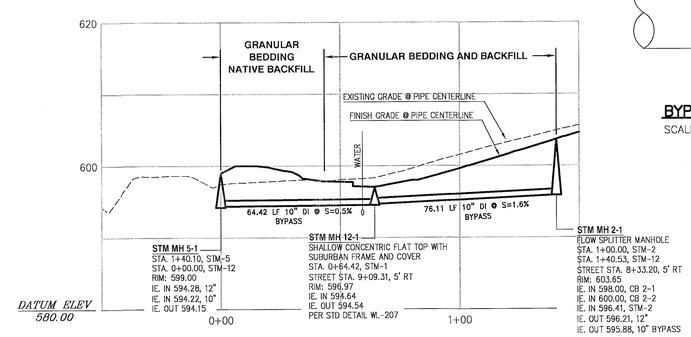

STM-12
STORM DRAINAGE PROFILE

12 / C-18

SCALE: 1" = 30' HORIZONTAL
1" = 10' VERTICAL

REGISTERED PROFESSIONAL ENGINEER
7126
OREGON
JULY 16, 1971
BRUCE D. GOLDSON

EXPIRES: 06/30/2017
SIGNATURE DATE: 05/25/2017

STORM DRAINAGE PROFILES STM-6,7,8,9,10,11,12

2015-129M

DESIGNED:	BDG			
DRAWN:	BJS			
SCALE:	1" = 60'	05/24/2017	2	MODIFICATION PER REVIEW BY CITY STAFF
DATE:	March, 2016	04/10/2017	1	REVIEW PER INITIAL CITY REVIEW
FILE:	Rosemont Civil1	DATE	NO.	REVISION

Theta, llc
ENGINEERING - SURVEYING - PLANNING
PO Box 1345
Lake Oswego, Oregon 97035
503/481-8822
email: thetaeng@comcast.net

Icon Construction & Development, LLC
1980 Willamette Falls Drive, Suite 200
West Linn, OR 97068
PH: (503) 657-0406

Tanner Ridge at Rosemont
1270 Rosemont Road
West Linn, Oregon

SHEET: C-17

F:\Acad\Rosemont\Rosemont Civil1.dwg, 5/25/2017 1:49:25 PM

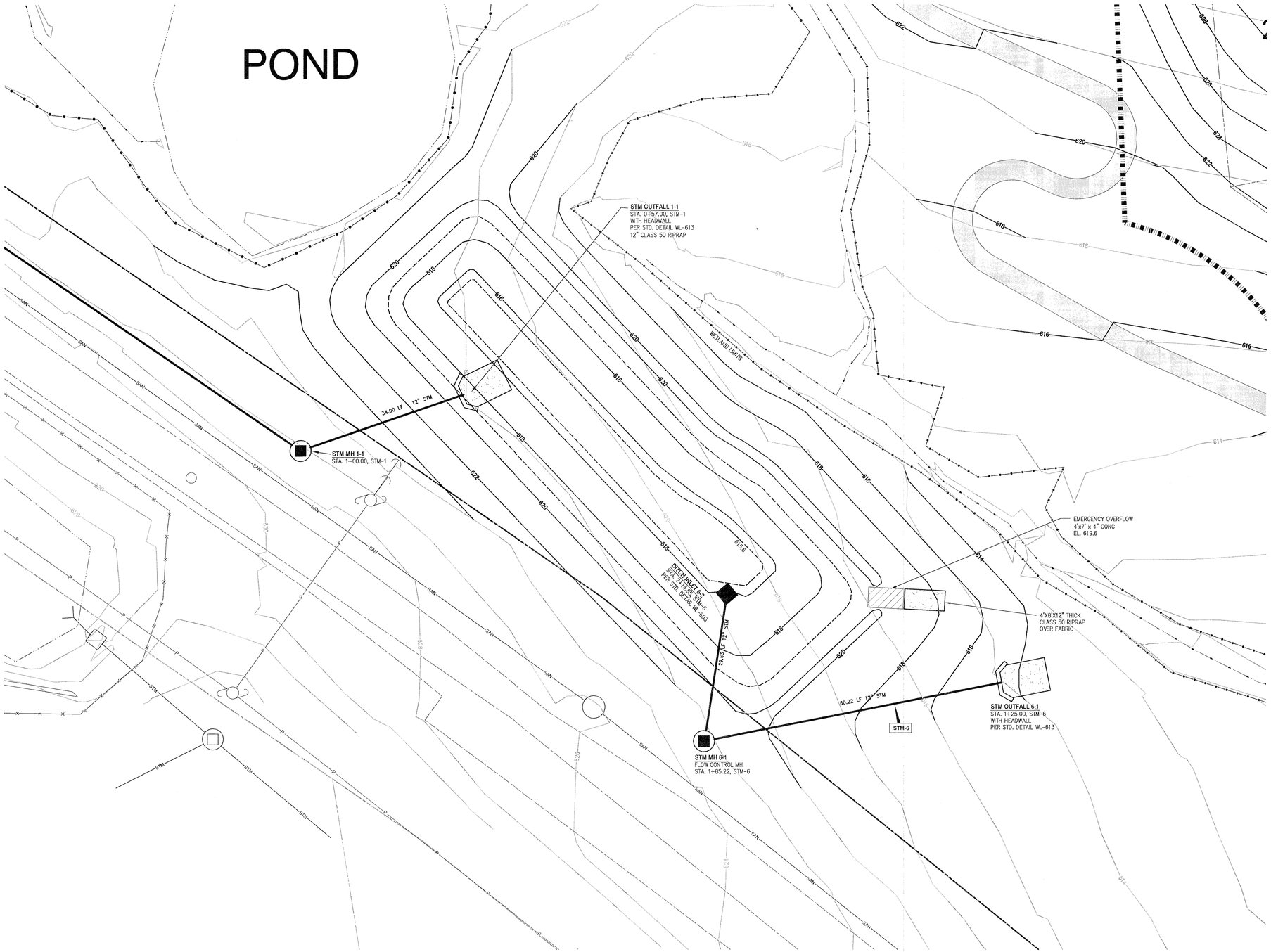

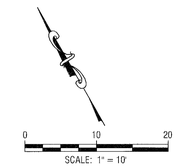

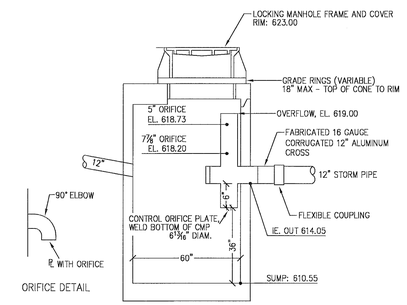

SEE PLAN AND STD. DETAIL WL-607A

FLOW CONTROL MANHOLE — A / C-18

SCALE: NTS

REGISTERED PROFESSIONAL ENGINEER
7126
OREGON
July 16, 1971
BRUCE D. GOLDSON

EXPIRES: 06/30/2017
SIGNATURE DATE: 05/25/2017

STORM DETENTION FACILITY 1

2015-129M

DESIGNED:	BDG			
DRAWN:	BJS			
SCALE:	1" = 60'	05/24/2017	2	MODIFICATION PER REVIEW BY CITY STAFF
DATE:	March, 2016	04/10/2017	1	REVIEW PER INITIAL CITY REVIEW
FILE:	Rosemont Civil1	DATE	NO.	REVISION

Theta, llc
ENGINEERING - SURVEYING - PLANNING
PO Box 1345
Lake Oswego, Oregon 97035
503/481-8822
email: thetaeng@comcast.net

Icon Construction & Development, LLC
1980 Willamette Falls Drive, Suite 200
West Linn, OR 97068
PH: (503) 657-0406

Tanner Ridge at Rosemont
1270 Rosemont Road
West Linn, Oregon

SHEET: C-18

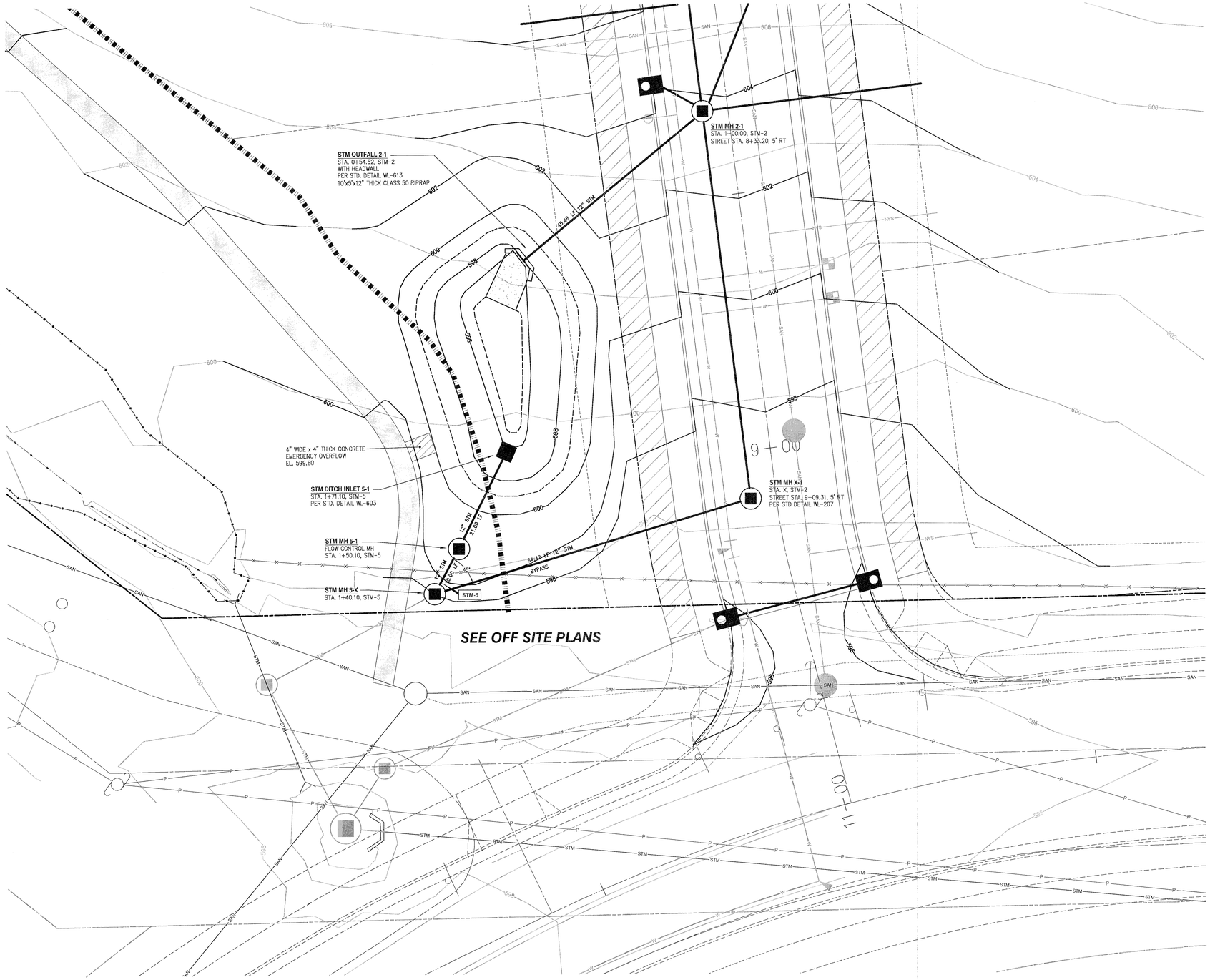

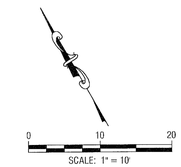

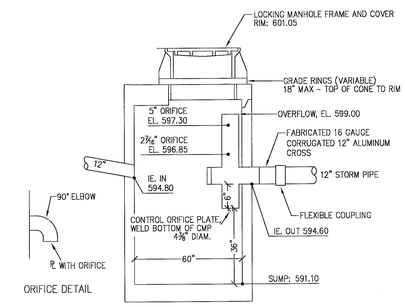

SEE PLAN AND STD. DETAIL WL-607A

FLOW CONTROL MANHOLE (A / C-19)

SCALE: NTS

REGISTERED PROFESSIONAL ENGINEER 7126 OREGON JULY 16, 1977 BRUCE D. GOLDSON

EXPIRES: 06/30/2017

SIGNATURE DATE: 05/25/2017

STORM DETENTION FACILITY 2

2015-129M

DESIGNED:	BDG			
DRAWN:	BJS			
SCALE:	1" = 60'	05/24/2017	2	MODIFICATION PER REVIEW BY CITY STAFF
DATE:	March, 2016	04/10/2017	1	REVIEW PER INITIAL CITY REVIEW
FILE:	Rosemont Civil1	DATE	NO.	REVISION

Theta, llc
ENGINEERING - SURVEYING - PLANNING
PO Box 1345
Lake Oswego, Oregon 97035
503/481-8822
email: thetaeng@comcast.net

Icon Construction & Development, LLC
1980 Willamette Falls Drive, Suite 200
West Linn, OR 97068
PH: (503) 657-0406

Tanner Ridge at Rosemont
1270 Rosemont Road
West Linn, Oregon

SHEET: C-19

F:\Acad\Rosemont\Rosemont Civil1.dwg, 5/25/2017 1:51:04 PM

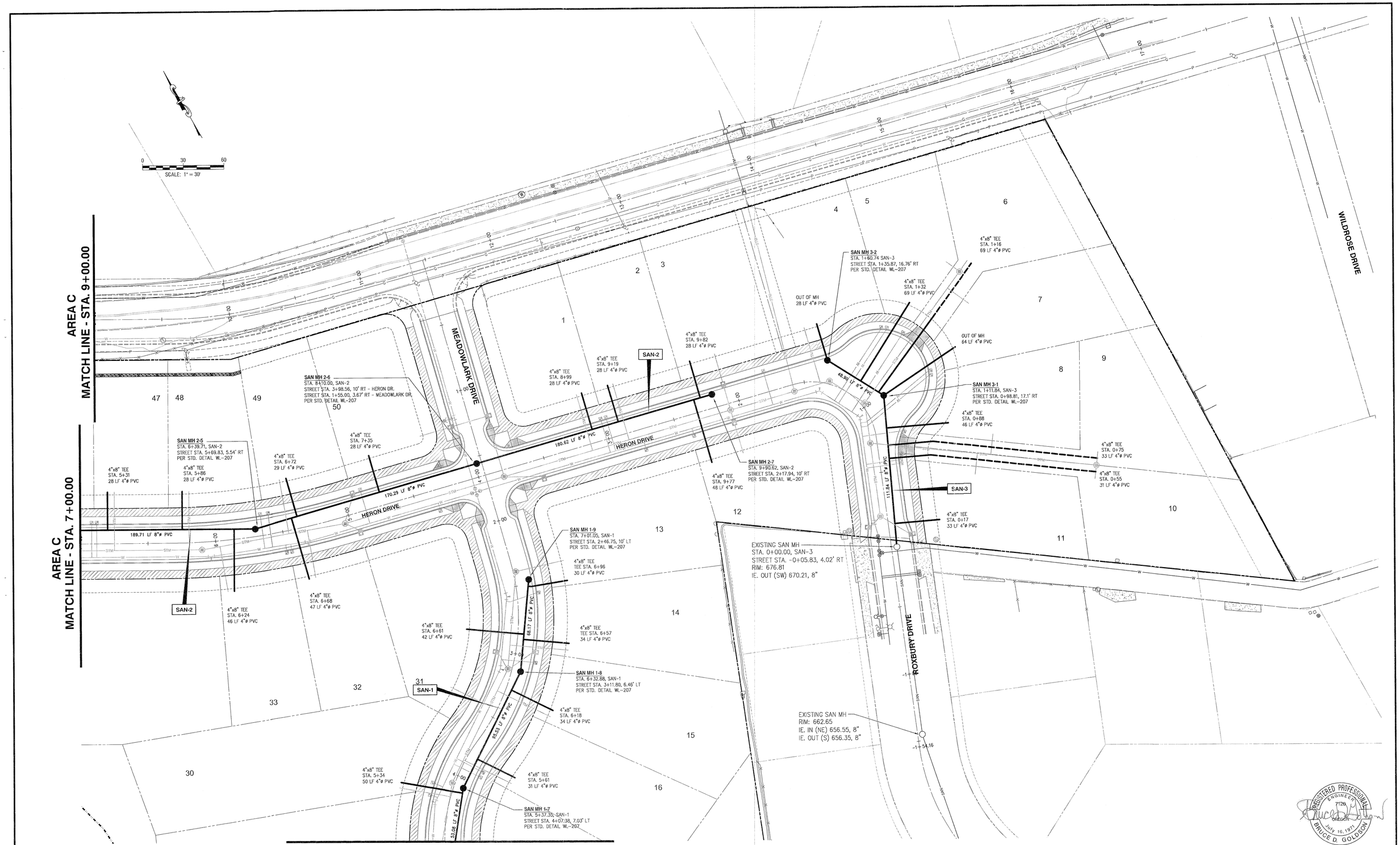

REGISTERED PROFESSIONAL ENGINEER
71126
OREGON
July 16, 1971
BRUCE D. GOLDSON

EXPIRES: 06/30/2017
SIGNATURE DATE: 05/25/2017

AREA A
SANITARY SEWER PLAN

2015-129M

DESIGNED:	BDG			
DRAWN:	BJS			
SCALE:	1" = 60'	05/24/2017	2	MODIFICATION PER REVIEW BY CITY STAFF
DATE:	March, 2016	04/10/2017	1	REVIEW PER INITIAL CITY REVIEW
FILE:	Rosemont Civil1	DATE	NO.	REVISION

Theta, llc
ENGINEERING - SURVEYING - PLANNING
PO Box 1345
Lake Oswego, Oregon 97035
503/481-8822
email: thetaeng@comcast.net

Icon Construction & Development, LLC
1980 Willamette Falls Drive, Suite 200
West Linn, OR 97068
PH: (503) 657-0406

Tanner Ridge at Rosemont
1270 Rosemont Road
West Linn, Oregon

SHEET:
C-20

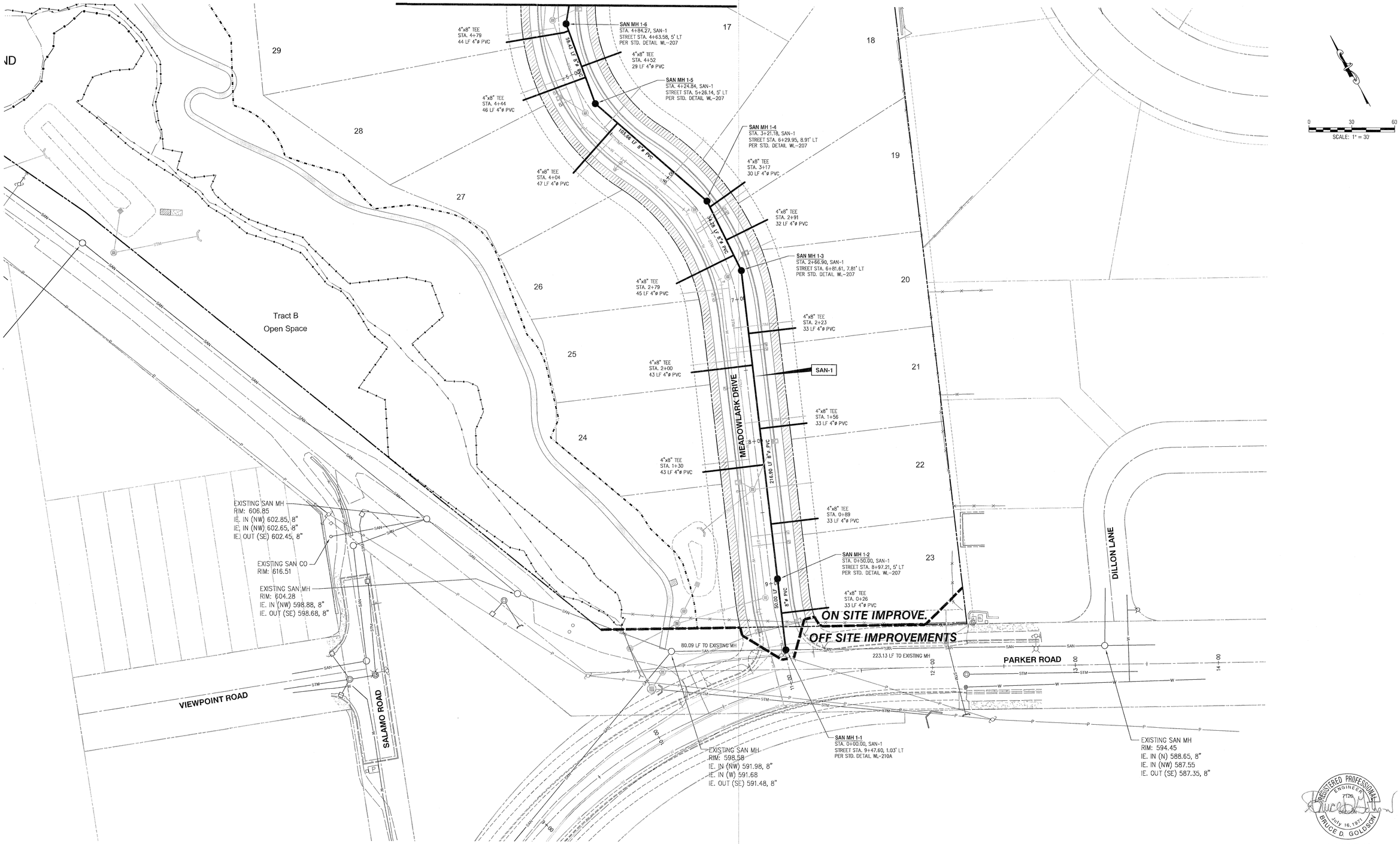

REGISTERED PROFESSIONAL ENGINEER
OREGON
JULY 16, 1971
BRUCE D. GOLDSON
EXPIRES: 06/30/2017
SIGNATURE DATE: 05/25/2017

AREA B
SANITARY SEWER PLAN

2015-129M

DESIGNED: BDG				
DRAWN: BJS				
SCALE: 1" = 60'	05/24/2017	2	MODIFICATION PER REVIEW BY CITY STAFF	
DATE: March, 2016	04/10/2017	1	REVIEW PER INITIAL CITY REVIEW	
FILE: Rosemont Civil1	DATE	NO.	REVISION	

Theta, llc
ENGINEERING - SURVEYING - PLANNING
PO Box 1345
Lake Oswego, Oregon 97035
503/481-8822
email: thetaeng@comcast.net

Icon Construction & Development, LLC
1980 Willamette Falls Drive, Suite 200
West Linn, OR 97068
PH: (503) 657-0406

Tanner Ridge at Rosemont
1270 Rosemont Road
West Linn, Oregon

SHEET: C-21

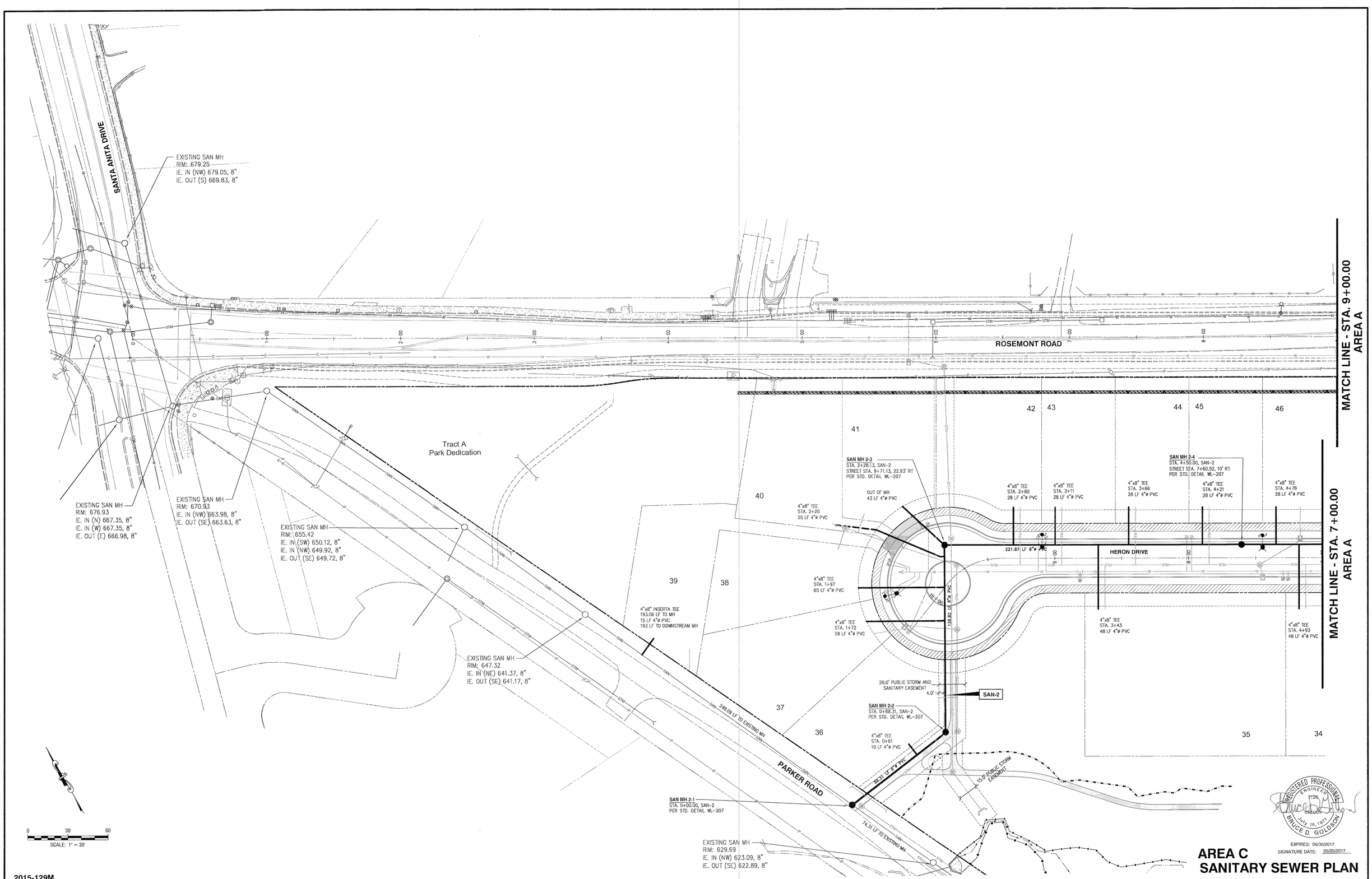

REGISTERED PROFESSIONAL ENGINEER
7120
OREGON
JULY 16, 1971
BRUCE D. GOLDSON

EXPIRES: 06/30/2017
SIGNATURE DATE: 05/25/2017

AREA C
SANITARY SEWER PLAN

2015-129M

DESIGNED:	BDG			
DRAWN:	BJS			
SCALE:	1" = 60'	05/24/2017	2	MODIFICATION PER REVIEW BY CITY STAFF
DATE:	March, 2016	04/10/2017	1	REVIEW PER INITIAL CITY REVIEW
FILE:	Rosemont Civil1	DATE	NO.	REVISION

Theta, llc
ENGINEERING - SURVEYING - PLANNING
PO Box 1345
Lake Oswego, Oregon 97035
503/481-8822
email: thetaeng@comcast.net

Icon Construction & Development, LLC
1980 Willamette Falls Drive, Suite 200
West Linn, OR 97068
PH: (503) 657-0406

Tanner Ridge at Rosemont
1270 Rosemont Road
West Linn, Oregon

SHEET:
C-22

F:\Acad\Rosemont\Rosemont Civil1.dwg, 5/25/2017 1:52:42 PM

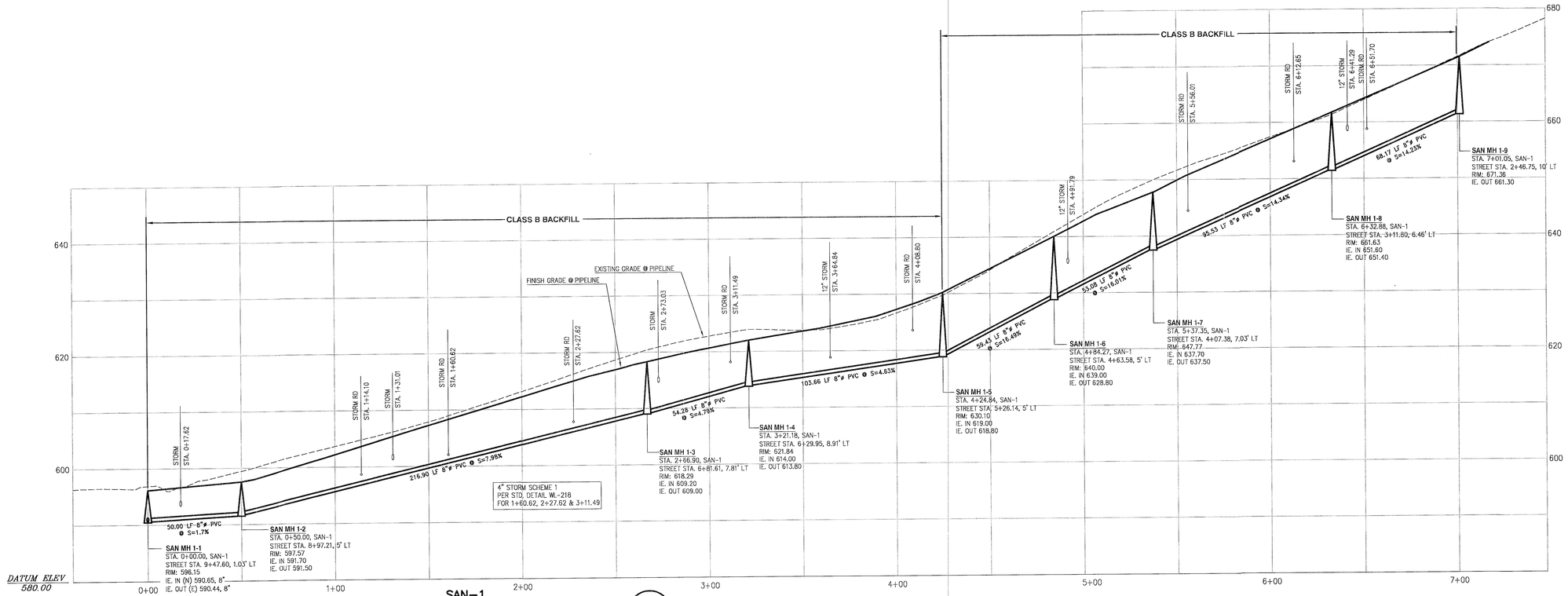

SAN–1
SANITARY SEWER PROFILE

1 / C–23

SCALE: 1" = 30' HORIZONTAL
1" = 10' VERTICAL

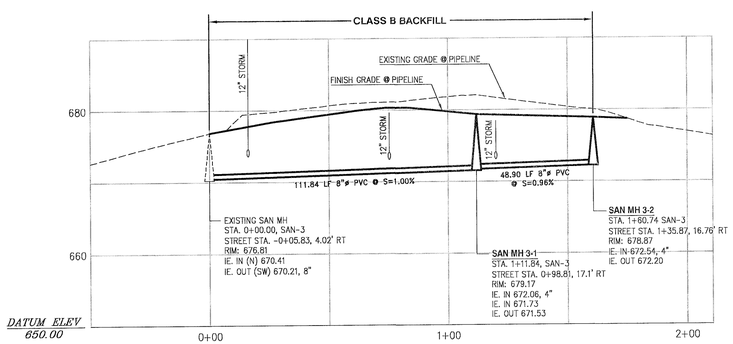

SAN–3
SANITARY SEWER PROFILE

3 / C–23

SCALE: 1" = 30' HORIZONTAL
1" = 10' VERTICAL

SANITARY LATERAL TABLE

SAN LAT	SIZE	LENGTH	IE. @ MAIN	IE. @ END	DEPTH	MAIN LINE STATION
LOT 1	4" PVC	28	670.70	681.00	6 FT	8+99
LOT 2	4" PVC	28	670.84	674.00	6 FT	9+19
LOT 3	4" PVC	28	671.35	674.00	6 FT	9+92
LOT 4	4" PVC	28	672.54	676.00	6 FT	MH
LOT 5	4" PVC	69	672.26	676.00	6 FT	1+32
LOT 6	4" PVC	69	672.43	675.90	6 FT	1+16
LOT 7	4" PVC	64	672.07	674.60	7 FT	MH
LOT 8	4" PVC	46	671.62	674.00	8 FT	0+88
LOT 9	4" PVC	33	671.49	674.00	7 FT	0+75
LOT 10	4" PVC	31	671.29	673.00	8 FT	0+55
LOT 11	4" PVC	33	670.91	673.00	6 FT	0+17
LOT 12	4" PVC	48	671.24	672.40	3.6 FT	9+77
LOT 13	4" PVC	30	660.25	667.00	6 FT	6+93
LOT 14	4" PVC	34	657.20	658.40	5.5 FT	6+64
LOT 15	4" PVC	34	651.42	653.94	5 FT	6+14
LOT 16	4" PVC	28	643.09	644.40	5.6 FT	5+58
LOT 17	4" PVC	28	627.22	630.00	6 FT	4+52
LOT 18	4" PVC	30	613.94	619.00	6 FT	3+17
LOT 19	4" PVC	32	612.74	617.00	6 FT	2+91
LOT 20	4" PVC	33	607.44	610.00	6 FT	2+23
LOT 21	4" PVC	33	601.47	603.00	6 FT	1+56
LOT 22	4" PVC	33	595.51	596.40	5.6 FT	0+89
LOT 23	4" PVC	33	591.43	592.30	5.7 FT	0+26
LOT 24	4" PVC	43	599.16	600.30	5.7 FT	1+30
LOT 25	4" PVC	43	605.39	607.00	6 FT	2+00
LOT 26	4" PVC	45	612.16	613.40	5.6 FT	2+79
LOT 27	4" PVC	47	617.83	621.00	4 FT	4+04
LOT 28	4" PVC	48	522.16	626.00	6 FT	4+44
LOT 29	4" PVC	47	627.93	632.00	5.6 FT	4+75
LOT 30	4" PVC	50	636.96	642.00	6 FT	5+32
LOT 31	4" PVC	42	655.60	660.00	6 FT	6+58
LOT 32	4" PVC	47	663.75	666.70	7.3 FT	6+68
LOT 33	4" PVC	46	660.49	662.00	8 FT	6+23
LOT 34	4" PVC	48	646.25	648.00	9 FT	4+93
LOT 35	4" PVC	48	637.10	638.50	5.5 FT	3+43
LOT 36	4" PVC	10	628.27	628.50	5.5 FT	0+61
LOT 37	4" PVC	59	631.46	633.00	4 FT	1+72
LOT 38	4" PVC	65	632.30	634.00	4 FT	1+97
LOT 39	4" PVC	15	638.43	639.00	3 FT	
LOT 40	4" PVC	55	633.07	634.50	4.5 FT	2+20
LOT 41	4" PVC	43	632.54	635.00	6 FT	MH
LOT 42	4" PVC	28	634.60	637.00	6 FT	2+80
LOT 43	4" PVC	28	635.83	638.00	6 FT	3+11
LOT 44	4" PVC	28	638.01	641.00	6 FT	3+66
LOT 45	4" PVC	28	640.20	646.00	6 FT	4+21
LOT 46	4" PVC	28	644.39	650.00	6 FT	4+76
LOT 47	4" PVC	28	650.43	656.00	6 FT	5+31
LOT 48	4" PVC	28	656.45	661.00	6 FT	5+86
LOT 49	4" PVC	29	663.92	669.00	6 FT	6+72
LOT 50	4" PVC	28	666.63	674.00	8 FT	7+35

REGISTERED PROFESSIONAL ENGINEER
7120
OREGON
JULY 16, 1971
BRUCE D. GOLDSON

EXPIRES: 06/30/2017
SIGNATURE DATE: 05/25/2017

SANITARY SEWER PROFILES SAN-1,3

2015-129M

DESIGNED:	BDG			
DRAWN:	BJS			
SCALE:	1" = 60'	05/24/2017	2	MODIFICATION PER REVIEW BY CITY STAFF
DATE:	March, 2016	04/10/2017	1	REVIEW PER INITIAL CITY REVIEW
FILE:	Rosemont Civil1	DATE	NO.	REVISION

Theta, llc
ENGINEERING - SURVEYING - PLANNING
PO Box 1345
Lake Oswego, Oregon 97035
503/481-8822
email: thetaeng@comcast.net

Icon Construction & Development, LLC
1980 Willamette Falls Drive, Suite 200
West Linn, OR 97068
PH: (503) 657-0406

Tanner Ridge at Rosemont
1270 Rosemont Road
West Linn, Oregon

SHEET:
C-23

F:\Acad\Rosemont\Rosemont Civil1.dwg, 5/25/2017 10:24 PM

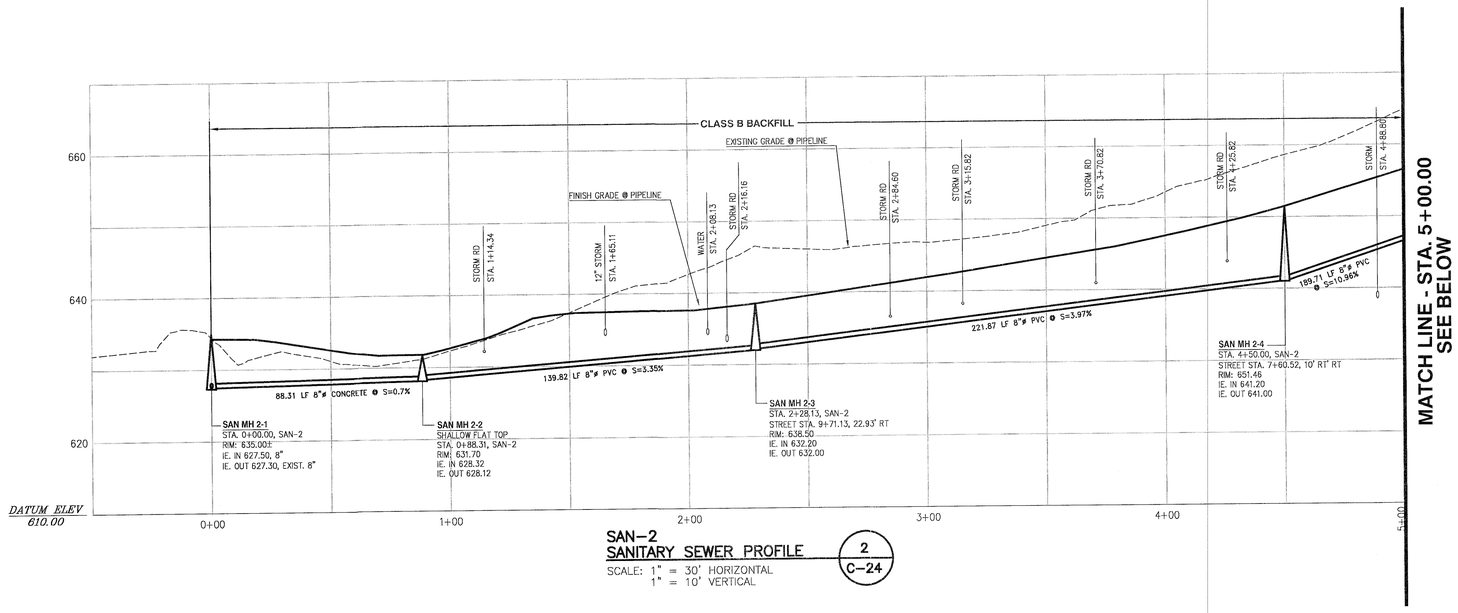

SAN–2
SANITARY SEWER PROFILE 2 / C–24
SCALE: 1" = 30' HORIZONTAL
1" = 10' VERTICAL

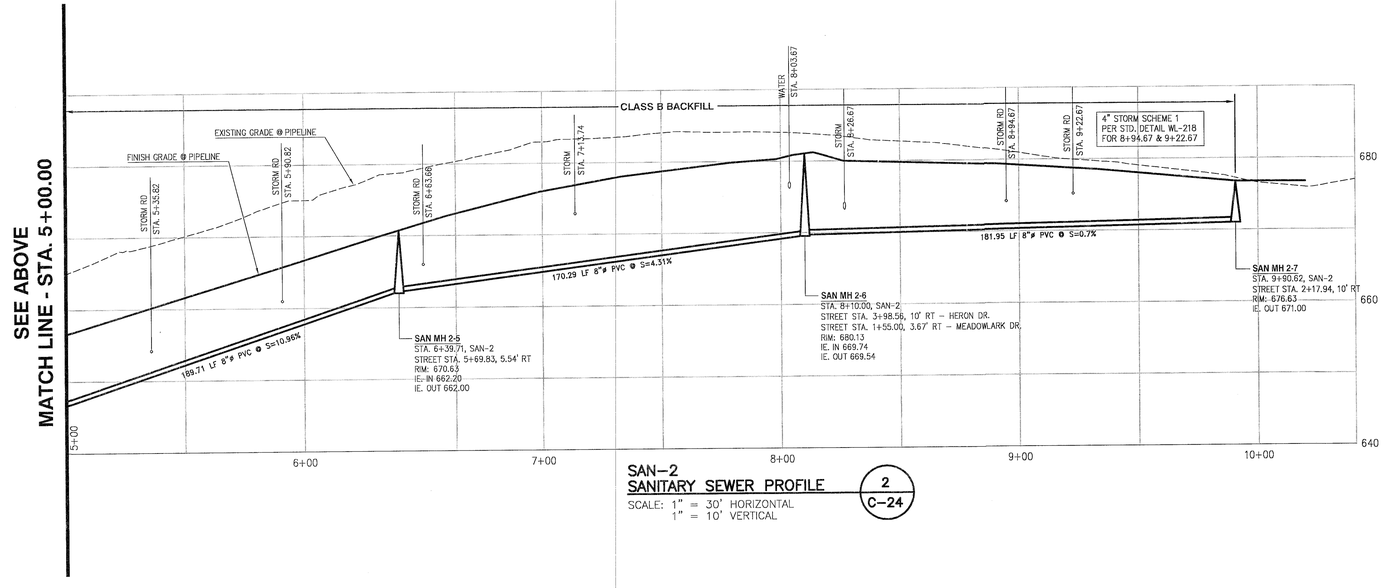

SAN–2
SANITARY SEWER PROFILE 2 / C–24
SCALE: 1" = 30' HORIZONTAL
1" = 10' VERTICAL

REGISTERED PROFESSIONAL ENGINEER 7120 OREGON July 16, 1971 BRUCE D. GOLDSON

EXPIRES: 06/30/2017
SIGNATURE DATE: 05/25/2017

SANITARY SEWER PROFILE SAN-2

2015-129M

DESIGNED:	BDG			
DRAWN:	BJS			
SCALE:	1" = 60'	05/24/2017	2	MODIFICATION PER REVIEW BY CITY STAFF
DATE:	March, 2016	04/10/2017	1	REVIEW PER INITIAL CITY REVIEW
FILE:	Rosemont Civil1	DATE	NO.	REVISION

Theta, llc
ENGINEERING - SURVEYING - PLANNING
PO Box 1345
Lake Oswego, Oregon 97035
503/481-8822
email: thetaeng@comcast.net

Icon Construction & Development, LLC
1980 Willamette Falls Drive, Suite 200
West Linn, OR 97068
PH: (503) 657-0406

Tanner Ridge at Rosemont
1270 Rosemont Road
West Linn, Oregon

SHEET: C-24

F:\Acad\Rosemont\Rosemont Civil1.dwg, 5/25/2017 8:55:52 PM

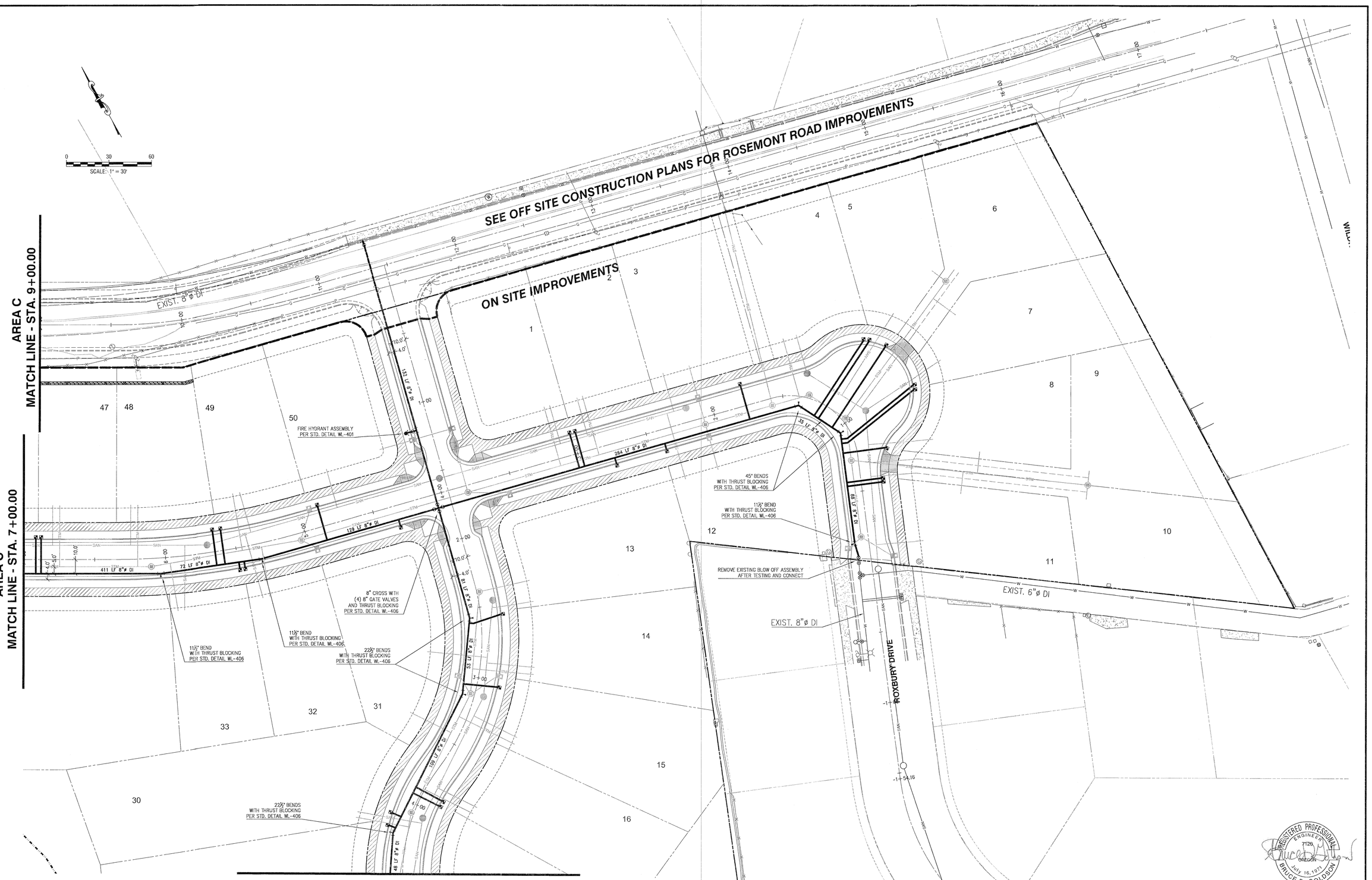

REGISTERED PROFESSIONAL ENGINEER
7129
OREGON
July 16, 1973
BRUCE D. GOLDSON

EXPIRES: 06/30/2017
SIGNATURE DATE: 05/25/2017

AREA A WATER PLAN

2015-129M

DESIGNED:	BDG			
DRAWN:	BJS			
SCALE:	1" = 60'	05/24/2017	2	MODIFICATION PER REVIEW BY CITY STAFF
DATE:	March, 2016	04/10/2017	1	REVIEW PER INITIAL CITY REVIEW
FILE:	Rosemont Civil1	DATE	NO.	REVISION

Theta, llc
ENGINEERING - SURVEYING - PLANNING
PO Box 1345
Lake Oswego, Oregon 97035
503/481-8822
email: thetaeng@comcast.net

Icon Construction & Development, LLC
1980 Willamette Falls Drive, Suite 200
West Linn, OR 97068
PH: (503) 657-0406

Tanner Ridge at Rosemont
1270 Rosemont Road
West Linn, Oregon

SHEET: C-25

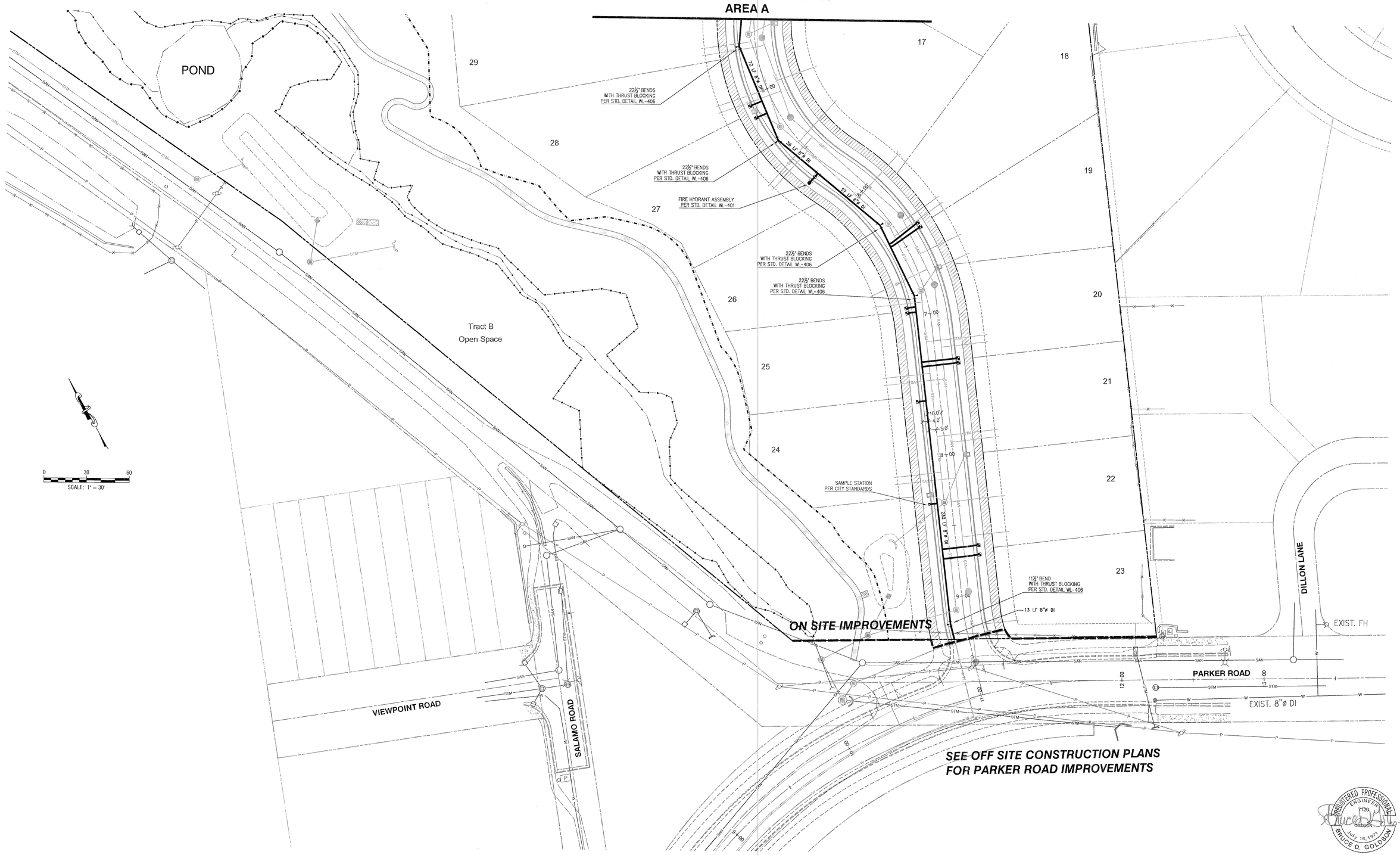

REGISTERED PROFESSIONAL ENGINEER
7120
OREGON
JULY 16, 1971
BRUCE D. GOLDSON

EXPIRES: 06/30/2017
SIGNATURE DATE: 05/25/2017

AREA B
WATER PLAN

2015-129M

DESIGNED:	BDG			
DRAWN:	BJS			
SCALE:	1" = 60'	05/24/2017	2	MODIFICATION PER REVIEW BY CITY STAFF
DATE:	March, 2016	04/10/2017	1	REVIEW PER INITIAL CITY REVIEW
FILE:	Rosemont Civil1	DATE	NO.	REVISION

Theta, llc
ENGINEERING - SURVEYING - PLANNING
PO Box 1345
Lake Oswego, Oregon 97035
503/481-8822
email: thetaeng@comcast.net

Icon Construction & Development, LLC
1980 Willamette Falls Drive, Suite 200
West Linn, OR 97068
PH: (503) 657-0406

Tanner Ridge at Rosemont
1270 Rosemont Road
West Linn, Oregon

SHEET:
C-26

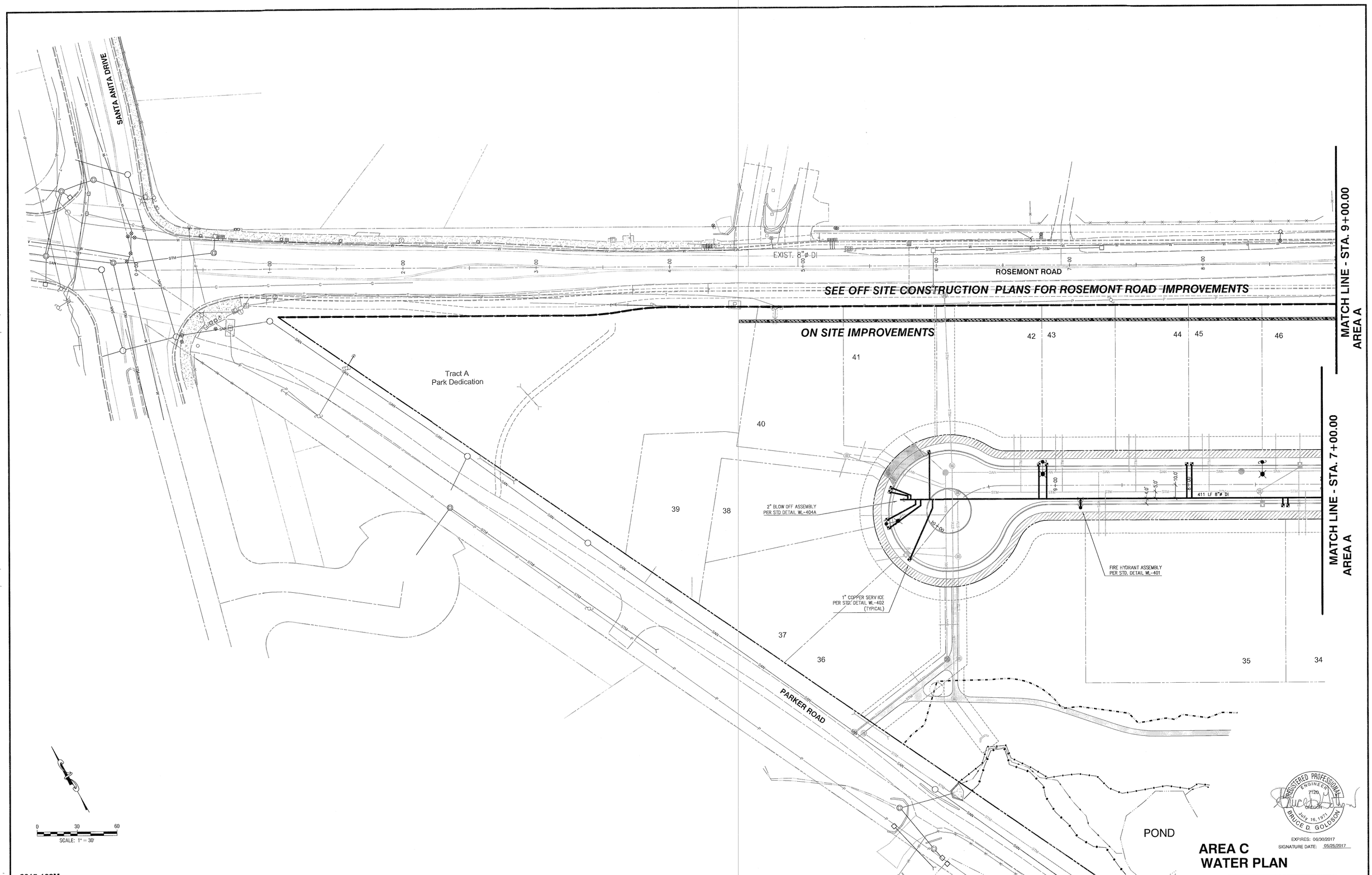

REGISTERED PROFESSIONAL ENGINEER
7120
OREGON
July 16, 1971
BRUCE D. GOLDSON
EXPIRES: 06/30/2017
SIGNATURE DATE: 05/25/2017

AREA C
WATER PLAN

2015-129M

DESIGNED:	BDG			
DRAWN:	BJS			
SCALE:	1" = 60'	05/24/2017	2	MODIFICATION PER REVIEW BY CITY STAFF
DATE:	March, 2016	04/10/2017	1	REVIEW PER INITIAL CITY REVIEW
FILE:	Rosemont Civil1	DATE	NO.	REVISION

Theta, llc
ENGINEERING - SURVEYING - PLANNING
PO Box 1345
Lake Oswego, Oregon 97035
503/481-8822
email: thetaeng@comcast.net

Icon Construction & Development, LLC
1980 Willamette Falls Drive, Suite 200
West Linn, OR 97068
PH: (503) 657-0406

Tanner Ridge at Rosemont
1270 Rosemont Road
West Linn, Oregon

SHEET:
C-27

EROSION AND SEDIMENT CONTROL PLANS

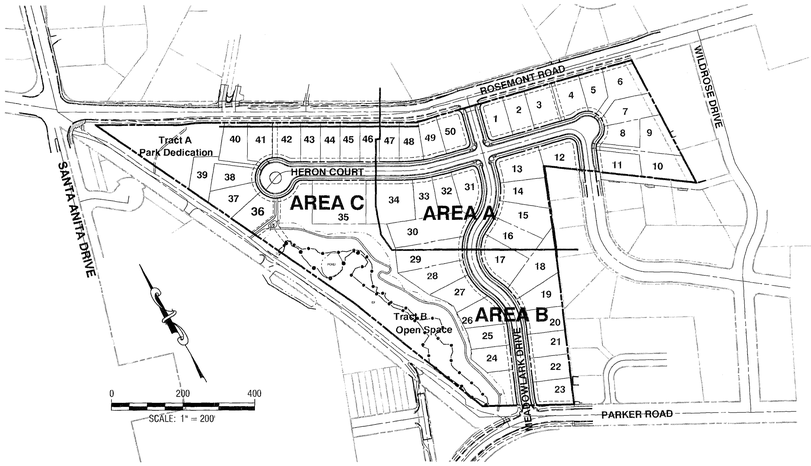

SITE MAP
SCALE: 1" = 200'

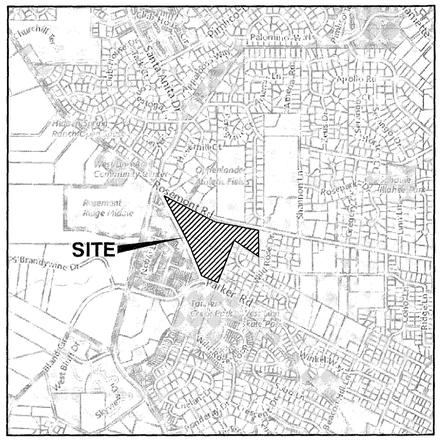

VICINITY MAP
SCALE: NTS

PROJECT LOCATION:

1270 ROSEMONT ROAD WEST
WEST LINN, OREGON
LATITUDE = 45.366977, LONGITUDE = 122.642848

PROPERTY DESCRIPTION:

2 1E 26A TAX LOT 1100
LOCATED IN CLACKAMAS COUNTY, OREGON

ATTENTION EXCAVATORS:

OREGON LAW REQUIRES YOU TO FOLLOW RULES ADOPTED BY THE OREGON UTILITY NOTIFICATION CENTER. THOSE RULES ARE SET FORTH IN OAR 952-001-0010 THROUGH OAR 952-001-0090. YOU MAY OBTAIN COPIES OF THESE RULES FROM THE CENTER BY CALLING 503-232-1987. IF YOU HAVE ANY QUESTIONS ABOUT THE RULES, YOU MAY CONTACT THE CENTER. YOU MUST NOTIFY THE CENTER AT LEAST TWO BUSINESS DAYS, BEFORE COMMENCING AN EXCAVATION. CALL 503-246-6699.

LEGEND

- EXISTING DECIDUOUS TREE
- EXISTING CONIFEROUS TREE
- EXISTING SIGN
- EXISTING GAS VALVE
- EXISTING TRANSFORMER
- EXISTING SIGNAL BOX
- EXISTING SIGNAL POST
- EXISTING POWER METER
- EXISTING STREET LIGHT
- EXISTING UTILITY POLE
- EXISTING UTILITY RISER
- EXISTING MAILBOX
- EXISTING POWER VAULT
- EXISTING STORM MANHOLE
- EXISTING CATCH BASIN
- EXISTING CLEANOUT
- EXISTING SANITARY MANHOLE
- EXISTING WATER VALVE
- EXISTING FIRE HYDRANT
- EXISTING WATER METER
- NEW STORM MANHOLE
- NEW STORM CATCH BASIN
- NEW COMBO CURB INLET
- NEW SANITARY MANHOLE
- NEW FIRE HYDRANT
- PROPOSED WATER BLOWOFF VALVE
- PROPOSED WATER VALVE
- PROPOSED STREET LIGHT
- EXISTING PROPERTY BOUNDARY
- EXISTING PROPERTY LINE
- EXISTING RIGHT-OF-WAY
- EXISTING FENCELINE
- EXISTING CURB
- EXISTING EDGE OF PAVEMENT
- EXISTING EDGE OF PAVEMENT
- EXISTING SANITARY LINE
- EXISTING STORM LINE
- EXISTING WATER LINE
- EXISTING RETAINING WALL
- EXISTING OVERHEAD POWER
- EXISTING GAS
- EXISTING TELEPHONE
- EXISTING GRAVEL
- NEW PROPERTY LINE
- NEW EASEMENT
- NEW CURB
- NEW SANITARY LINE
- NEW STORM LINE
- NEW WATER LINE
- EXISTING CONCRETE
- NEW CONCRETE
- NEW AC PAVEMENT
- LIMITS OF WETLAND
- LIMITS OF ENVIRONMENTAL BUFFER

DEVELOPER

ICON CONSTRUCTION AND DEVELOPMENT, LLC
1980 WILLAMETTE FALLS DRIVE, #200
WEST LINN, OREGON
PHONE: 503-657-0406

ENGINEERING FIRM

THETA, LLC
CONTACT: BRUCE GOLDSON, P.E.
P.O. BOX 1345
LAKE OSWEGO, OR 97035
PHONE: 503-481-8822

NARRATIVE DESCRIPTIONS

EXISTING SITE CONDITIONS

* VACANT

DEVELOPED CONDITIONS

* RESIDENTIAL SUBDIVISION

NATURE OF CONSTRUCTION ACTIVITY AND ESTIMATED TIME TABLE

* CLEARING (JUNE, 2017
* MASS GRADING (JUNE/JULY, 2017)
* UTILITY INSTALLATION (JULY, 2017)
* STREET CONSTRUCTION (AUGUST, 2017)
* FINAL STABILIZATION (SEPTEMBER, 2017)

TOTAL SITE AREA = 16 ACRES

TOTAL DISTURBED AREA = 9.6 ACRES

SITE SOIL CLASSIFICATION:

CONNELIUS SILT LOAM, HYDROLOGIC GROUP C
SAUM SILT LOAM, HYDROLOGIC GROUP C

ON-SITE SOILS ARE SOMEWHAT POORLY DRAINED. ALL FILL MATERIAL SHALL BE GENERATED ON-SITE FROM GRADING EXCAVATION AND UTILITY TRENCH SPOILS OR IMPORTED.

RECEIVING WATER BODIES:

PUBLIC STORM SEWER SYSTEM TO A DOWNSTREAM DETENTION FACILITY AND TO TANNER CREEK DRAINAGE WITH DISCHARGES TO THE WILLAMETTE RIVER.

PERMITTEE'S SITE INSPECTOR:

COMPANY/AGENCY: THETA, LLC
PHONE: 503-481-8822
BRUCE COLDSON, P.E.
EMAIL: thetaeng@comcast.net

DESCRIPTION OF EXPERIENCE:

PREVIOUSLY CERTIFIED IN EROSION AND SEDIMENT THROUGH CLACKAMAS COUNTY. ATTENDED SEMINARS AT CLACKAMAS COUNTY AND HBA ON EROSION CONTROL. DESIGNER OF EROSION CONTROL PLANS

INSPECTION FREQUENCY:

SITE CONDITION	MINIMUM FREQUENCY
	DAILY WHEN STORMWATER RUNOFF, INCLUDING RUNOFF FROM SNOWMELT, IS OCCURRING.
2. PRIOR TO THE SITE BECOMING INACTIVE OR IN ANTICIPATION OF SITE INACCESSIBILITY.	ONCE TO ENSURE THAT EROSION AND SEDIMENT CONTROL MEASURES ARE IN WORKING ORDER. ANY NECESSARY MAINTENANCE AND REPAIR MUST BE MADE PRIOR TO LEAVING THE SITE.
3. INACTIVE PERIODS GREATER THAN SEVEN (7) CONSECUTIVE CALENDAR DAYS.	ONCE EVERY TWO (2) WEEKS.
4. PERIODS DURING WHICH THE SITE IS INACCESSIBLE DUE TO INCLEMENT WEATHER.	IF PRACTICAL, INSPECTIONS MUST OCCUR DAILY AT A RELEVANT AND ACCESSIBLE DISCHARGE POINT OR DOWNSTREAM LOCATION.

* HOLD A PRE-CON MEETING OF PROJECT CONSTRUCTION PERSONNELTHAT INCLUDES THE EC INSPECTOR.
* ALL INSPECTIONS MUST BE MADE IN ACCORDANCE WITH DEQ 1200 C PERMIT REQUIREMENTS.
* INSPECTION LOGS MUST BE KEPT IN ACCORDANCE WITH DEQ'S 1200 C PERMIT REQUIREMENTS.
* CHANGES TO THE APPROVED ESC PLAN MUST BE SUBMITTED TO DEQ IN THE FORM OF AN ACTION PLAN.

THE PERMITTEE IS REQUIRED TO MEET ALL THE CONDITIONS OF THE 1200C PERMIT. THIS ESCP ANDGENERAL CONDITIONS HAVE BEEN DEVELOPED TO FACILITATE COMPLIANCE WITH THE 1200C PERMIT REQUIREMENTS. IN CASES OF DISCREPANCIES OR OMISSIONS, THE 1200C PERMIT REQUIREMENTS SUPERCEDE REQUIREMENTS OF THIS PLAN.

STANDARD EROSION AND SEDIMENT CONTROL PLAN DRAWING NOTES:

INSPECTION FREQUENCY

SITE CONDITIONS	MINIMUM FREQUENCY
1. ACTIVE PERIOD	DAILY WHEN STORMWATER RUNOFF, INCLUDING RUNOFF FROM SNOWMELT, IS OCCURING. AT LEAST ONCE EVERY TWO WEEKS, REGARDLESS OF WHETHER OR NOT RUNOFF IS OCCURING.
2. PRIOR TO THE SITE BECOMING INACTIVE OR IN ANTICIPATION OF SITE INACCESSIBILITY	ONCE TO ENSURE THAT EROSION AND SEDIMENT CONTROL MEASURES ARE IN WORKING ORDER. ANY NECESSARY MAINTENANCE AND REPAIR MUST BE MADE PRIOR TO LEAVING THE SITE
3. INACTIVE PERIODS GREATER THAN FOURTEEN (14) CALENDAR DAYS.	ONCE EVERY TWO (2) WEEKS
4. PERIODS DURING WHICH THE SITE IS INACCESSIBLE DUE TO INCLEMENT WEATHER	IF PRACTICLE, INSPECTIONS MUST OCCUR DAILY AT A RELEVANT AND ACCESSIBLE DISCHARGE POINT OR DOWNSTREAM LOCATION.

1. HOLD A PRE-CONSTRUCTION MEETING OF PROJECT CONSTRUCTION PERSONNEL THAT INCLUDES THE INSPECTOR TO DISCUSS EROSION AND SEDIMENT CONTROL MEASURES AND CONSTRUCTION LIMITS. (SCHEDULE A.8.C.i.(3))
2. ALL INSPECTIONS MUST BE MADE IN ACCORDANCE WITH DEQ 1200-C PERMIT REQUIREMENTS.
3. INSPECTION LOGS MUST BE KEPT IN ACCORDANCE WITH DEQ'S 1200-C PERMIT REQUIREMENTS.
4. RETAIN A COPY OF THE ESCP AND ALL REVISIONS ON SITE AND MAKE IT AVAILABLE ON REQUEST TO DEQ, AGENT, OR THE LOCAL MUNICIPALITY. DURING INACTIVE PERIODS OF GREATER THAN SEVEN (7) CONSECUTIVE CALENDAR DAYS, RETAIN THE ESCP AT THE CONSTRUCTION SITE OR AT ANOTHER LOCATION. (SCHEDULE B.2.A)
5. ALL PERMIT REGISTRANTS MUST IMPLEMENT THE ESCP. FAILURE TO IMPLEMENT ANY OF THE CONTROL MEASURES OR PRACTICES DESCRIBED IN THE ESCP IS A VIOLATION OF THE PERMIT. (SCHEDULE A.8.A)
6. THE ESCP MEASURES SHOWN ON THIS PLAN ARE MINIMUM REQUIREMENTS FOR ANTICIPATED SITE CONDITIONS. DURING THE CONSTRUCTION PERIOD, UPGRADE THESE MEASURES AS NEEDED TO COMPLY WITH ALL APPLICABLE LOCAL, STATE, AND FEDERAL EROSION AND SEDIMENT CONTROL REGULATIONS. (SCHEDULE A.8.C.ii.(1)(C))
7. SUBMISSION OF ALL ESCP REVISIONS IS NOT REQUIRED. SUBMITTAL OF THE ESCP REVISIONS IS ONLY UNDER SPECIFIC CONDITIONS. SUBMIT ALL NECESSARY REVISION TO DEQ OR AGENT. (SCHEDULE A.12.C.iii)
8. PHASE CLEARING AND GRADING TO THE MAXIMUM EXTENT PRACTICAL TO PREVENT EXPOSED INACTIVE AREAS FROM BECOMING A SOURCE OF EROSION. (SCHEDULE A.8.C.ii.(7)(D))
9. IDENTIFY, MARK, AND PROTECT (BY FENCING OFF OR OTHER MEANS) CRITICAL RIPARIAN AREAS AND VEGETATION INCLUDING IMPORTANT TREES AND ASSOCIATED ROOTING ZONES, AND VEGETATION AREAS TO BE PRESERVED. IDENTIFY VEGETATIVE BUFFER ZONES BETWEEN THE SITE AND SENSITIVE AREAS (E.G., WETLANDS), AND OTHER AREAS TO BE PRESERVED, ESPECIALLY IN PERIMETER AREAS. (SCHEDULE A.8.C.i.(1) & (2))
10. PRESERVE EXISTING VEGETATION WHEN PRACTICAL AND RE-VEGETATE OPEN AREAS. RE-VEGETATE OPEN AREAS WHEN PRACTICABLE BEFORE AND AFTER GRADING OR CONSTRUCTION. IDENTIFY THE TYPE OF VEGETATIVE SEED MIX USED. (SCHEDULE A.7.B.iii(1) AND A.7.B.iii(3))
11. EROSIGN AND SEDIMENT CONTROL MEASURES INCLUDING PERIMETER SEDIMENT CONTROL MUST BE IN PLACE BEFORE VEGETATION IS DISTURBED AND MUST REMAIN IN PLACE AND BE MAINTAINED, REPAIRED, AND PROMPTLY IMPLEMENTED FOLLOWING PROCEDURES ESTABLISHED FOR THE DURATION OF CONSTRUCTION, INCLUDING PROTECTION FOR ACTIVE STORM DRAIN INLETS AND CATCH BASINS AND APPROPRIATE NON-STORMWATER POLLUTION CONTROLS. (SCHEDULE A.7.D.i AND A.8.C)
12. ESTABLISH CONCRETE TRUCK AND OTHER CONCRETE EQUIPMENT WASHOUT AREAS BEFORE BEGINNING CONCRETE WORK. (SCHEDULE A.8.C.i.(6))
13. APPLY TEMPORARY AND/OR PERMANENT SOIL STABILIZATION MEASURES IMMEDIATELY ON ALL DISTURBED AREAS AS GRADING PROGRESSES AND FOR ALL ROADWAYS INCLUDING GRAVEL ROADWAYS. (SCHEDULE A.8.C.ii.(2))
14. ESTABLISH MATERIAL AND WASTE STORAGE AREAS, AND OTHER NON-STORMWATER CONTROLS. (SCHEDULE A.8.C.i.(7))
15. PREVENT TRACKING OF SEDIMENT ONTO PUBLIC OR PRIVATE ROADS USING BMPS SUCH AS: GRAVELED (OR PAVED) EXITS AND PARKING AREAS, GRAVEL ALL UNPAVED ROADS LOCATED ONSITE, OR USE AN EXIT TIRE WASH. THESE BMPS MUST BE IN PLACE PRIOR TO LAND-DISTURBING ACTIVITIES. (SCHEDULE A.7.D.ii.(1) AND A.8.C.i.(4))
16. WHEN TRUCKING SATURATED SOILS FROM THE SITE, EITHER USE WATER-TIGHT TRUCKS OR DRAIN LOADS ON SITE. (SCHEDULE A.7.D.ii.(3))
17. USE BMPS TO PREVENT OR MINIMIZE STORMWATER EXPOSURE TO POLLUTANTS FROM SPILLS; VEHICLE AND EQUIPMENT FUELING, MAINTENANCE, AND STORAGE; OTHER CLEANING AND MAINTENANCE ACTIVITIES; AND WASTE HANDLING ACTIVITIES. THESE POLLUTANTS INCLUDE FUEL, HYDRAULIC FLUID, AND OTHER OILS FROM VEHICLES AND MACHINERY, AS WELL AS DEBRIS, LEFTOVER PAINTS, SOLVENTS, AND GLUES FROM CONSTRUCTION OPERATIONS. (SCHEDULE A.7.E.i.(2))
18. IMPLEMENT THE FOLLOWING BMPS WHEN APPLICABLE: WRITTEN SPILL PREVENTION AND RESPONSE PROCEDURES, EMPLOYEE TRAINING ON SPILL PREVENTION AND PROPER DISPOSAL PROCEDURES, SPILL KITS IN ALL VEHICLES, REGULAR MAINTENANCE SCHEDULE FOR VEHICLES AND MACHINERY, MATERIAL DELIVERY AND STORAGE CONTROLS, TRAINING AND SIGNAGE, AND COVERED STORAGE AREAS FOR WASTE AND SUPPLIES. (SCH A 7.E.iii.)
19. USE WATER, SOIL-BINDING AGENT OR OTHER DUST CONTROL TECHNIQUE AS NEEDED TO AVOID WIND-BLOWN SOIL. (SCHEDULE A 7.B.ii)
20. THE APPLICATION RATE OF FERTILIZERS USED TO REESTABLISH VEGETATION MUST FOLLOW MANUFACTURER'S RECOMMENDATIONS TO MINIMIZE NUTRIENT RELEASES TO SURFACE WATERS. EXERCISE CAUTION WHEN USING TIME-RELEASE FERTILIZERS WITHIN ANY WATERWAY RIPARIAN ZONE. (SCHEDULE A.9.B.ii)
21. IF A STORMWATER TREATMENT SYSTEM (FOR EXAMPLE, ELECTRO-COAGULATION, FLOCCULATION, FILTRATION, ETC.) FOR SEDIMENT OR OTHER POLLUTANT REMOVAL IS EMPLOYED, SUBMIT AN OPERATION AND MAINTENANCE PLAN (INCLUDING SYSTEM SCHEMATIC, LOCATION OF SYSTEM, LOCATION OF INLET, LOCATION OF DISCHARGE, DISCHARGE DISPERSION DEVICE DESIGN, AND A SAMPLING PLAN AND FREQUENCY) BEFORE OPERATING THE TREATMENT SYSTEM. OBTAIN PLAN APPROVAL BEFORE OPERATING THE TREATMENT SYSTEM. OPERATE AND MAINTAIN THE TREATMENT SYSTEM ACCORDING TO MANUFACTURER'S SPECIFICATIONS. (SCHEDULE A.9.D)
22. TEMPORARILY STABILIZE SOILS AT THE END OF THE SHIFT BEFORE HOLIDAYS AND WEEKENDS, IF NEEDED. THE REGISTRANT IS RESPONSIBLE FOR ENSURING THAT SOILS ARE STABLE DURING RAIN EVENTS AT ALL TIMES OF THE YEAR. (SCHEDULE A 7.B)
23. AT THE END OF EACH WORKDAY SOIL STOCKPILES MUST BE STABILIZED OR COVERED, OR OTHER BMPS MUST BE IMPLEMENTED TO PREVENT DISCHARGES TO SURFACE WATERS OR CONVEYANCE SYSTEMS LEADING TO SURFACE WATERS. (SCHEDULE A 7.E.ii.(2))
24. CONSTRUCTION ACTIVITIES MUST AVOID OR MINIMIZE EXCAVATION AND CREATION OF BARE GROUND DURING WET WEATHER. (SCHEDULE A.7.A.i)
25. SEDIMENT FENCE: REMOVE TRAPPED SEDIMENT BEFORE IT REACHES ONE THIRD OF THE ABOVE GROUND FENCE HEIGHT AND BEFORE FENCE REMOVAL. (SCHEDULE A.9.C.i)
26. OTHER SEDIMENT BARRIERS (SUCH AS BIOBAGS): REMOVE SEDIMENT BEFORE IT REACHES TWO INCHES DEPTH ABOVE GROUND HEIGHT. AND BEFORE BMP REMOVAL. (SCHEDULE A.9.C.ii)
27. CATCH BASINS: CLEAN BEFORE RETENTION CAPACITY HAS BEEN REDUCED BY FIFTY PERCENT. SEDIMENT BASINS AND SEDIMENT TRAPS: REMOVE TRAPPED SEDIMENTS BEFORE DESIGN CAPACITY HAS BEEN REDUCED BY FIFTY PERCENT AND AT COMPLETION OF PROJECT. (SCHEDULE A.9.C.iii & iv)
28. WITHIN 24 HOURS, SIGNIFICANT SEDIMENT THAT HAS LEFT THE CONSTRUCTION SITE. MUST BE REMEDIATED. INVESTIGATE THE CAUSE OF THE SEDIMENT RELEASE AND IMPLEMENT STEPS TO PREVENT A RECURRENCE OF THE DISCHARGE WITHIN THE SAME 24 HOURS. ANY IN-STREAM CLEAN UP OF SEDIMENT SHALL BE PERFORMED ACCORDING TO THE OREGON DIVISION OF STATE LANDS REQUIRED TIMEFRAME. (SCHEDULE A.9.B.i)
29. THE INTENTIONAL WASHING OF SEDIMENT INTO STORM SEWERS OR DRAINAGE WAYS MUST NOT OCCUR. VACUUMING OR DRY SWEEPING AND MATERIAL PICKUP MUST BE USED TO CLEANUP RELEASED SEDIMENTS. (SCHEDULE A.9.B.ii)
30. THE ENTIRE SITE MUST BE TEMPORARILY STABILIZED USING VEGETATION OR A HEAVY MULCH LAYER, TEMPORARY SEEDING, OR OTHER METHOD SHOULD ALL CONSTRUCTION ACTIVITIES CEASE FOR 30 DAYS OR MORE. (SCHEDULE A.7.F.i)
31. PROVIDE TEMPORARY STABILIZATION FOR THAT PORTION OF THE SITE WHERE CONSTRUCTION ACTIVITIES CEASE FOR 14 DAYS OR MORE WITH A COVERING OF BLOWN STRAW AND A TACKIFIER, LOOSE STRAW, OR AN ADEQUATE COVERING OF COMPOST MULCH UNTIL WORK RESUMES ON THAT PORTION OF THE SITE. (SCHEDULE A.7.F.ii)
32. PROVIDE PERMANENT EROSION CONTROL MEASURES ON ALL EXPOSED AREAS. DO NOT REMOVE TEMPORARY SEDIMENT CONTROL PRACTICES UNTIL PERMANENT VEGETATION OR OTHER COVER OF EXPOSED AREAS IS ESTABLISHED. HOWEVER, DO REMOVE ALL TEMPORARY EROSION CONTROL MEASURES AS EXPOSED AREAS BECOME STABILIZED, UNLESS DOING SO CONFLICTS WITH LOCAL REQUIREMENTS. PROPERLY DISPOSE OF CONSTRUCTION MATERIALS AND WASTE, INCLUDING SEDIMENT RETAINED BY TEMPORARY BMPS. (SCHEDULE A.7.B.iii(2) AND A.8.C.iii)

LOCAL AGENCY-SPECIFIC EROSION CONTROL NOTES:

1. OWNER OR DESIGNATED PERSON SHALL BE RESPONSIBLE FOR PROPER INSTALLATION AND MAINTENANCE OF ALL EROSION AND SEDIMENT CONTROL MEASURES, IN ACCORDANCE WITH LOCAL, STATE, AND FEDERAL REGULATIONS.
2. PRIOR TO ANY LAND DISTURBING ACTIVITIES, THE BOUNDARIES OF THE CLEARING LIMITS, VEGETATED BUFFERS, AND ANY SENSITIVE AREAS SHOWN ON THIS PLAN SHALL BE CLEARLY DELINEATED IN THE FIELD. DURING THE CONSTRUCTION PERIOD, NO DISTURBANCE IS PERMITTED BEYOND THE CLEARING LIMITS. THE OWNER/PERMITTEE MUST MANTAIN THE DELINEATION FOR THE DURATION OF THE PROJECT. NOTE: VEGETATED CORRIDORS TO BE DELINEATED WITH ORANGE CONSTRUCTION FENCE OR APPROVED EQUAL.
3. PRIOR TO ANY LAND DISTURBING ACTIVITIES, THE BMP's THAT MUST BE INSTALLED ARE A GRAVEL CONSTRUCTION ENTRANCE, PERIMETER SEDIMENT CONTROL, AND INLET PROTECTION. THESE BMP's MUST BE MAINTAINED FOR THE DURATION OF THE PROJECT.
4. IF VEGETATIVE SEED MIXES ARE SPECIFIED, SEEDING MUST TAKE PLACE NO LATER THAT SEPTEMBER 1; THE TYPE AND PERCENTAGES OF SEED IN THE MIX MUST BE IDENTIFIED ON THE PLANS.
5. ALL PUMPING OF SEDIMENT LADEN WATER SHALL BE DISCHARGED OVER AN UNDISTURBED, PREFERABLY VEGETATED AREA, AND THROUGH A SEDIMENT CONTROL BMP i.e. (FILTER BAG).
6. THE ESC PLAN MUST BE KEPT ON SITE. ALL MEASURES SHOWN ON THE PLAN MUST BE INSTALLED PROPERLY TO ENSURE THAT SEDIMENT OR SEDIMENT LADEN WATER DOES NOT ENTER A SURFACE WATER SYSTEM, ROADWAY, OR OTHER PROPERTIES.
7. THE ESC MEASURES SHOWN ON THIS PLAN ARE MINIMUM REQUIREMENTS FOR ANTICIPATED SITE CONDITIONS. DURING THE CONSTRUCTION PERIOD, THESE MEASURES SHALL BE UPGRADED WITHIN 3 DAYS (OCT. 1 TO APR. 30) TO COMPLY WITH ALL APPLICABLE LOCAL, STATE, AND FEDERAL EROSION CONTROL REGULATIONS. CHANGES TO THE APPROVED ESC PLAN MUST BE SUBMITTED IN THE FORM OF AN ACTION PLAN TO DEQ PER THE 1200 C PERMIT.
8. IN AREAS SUBJECT TO WIND EROSION, APPROPRIATE BMP's MUST BE USED WHICH MAY INCLUDE THE APPLICATION OF FINE WATER SPRAYING, PLASTIC SHEETING, MULCHING, OR OTHER APPROVED MEASURES.
9. ALL EXPOSED SOILS MUST BE COVERED DURING THE WET WEATHER PERIOD AND 21 DAYS OF MAY 1 TO SEPT. 30.

BMP MATRIX FOR CONSTRUCTION PHASES

REFER TO DEQ GUIDANCE MANUAL FOR A COMPREHENSIVE LIST OF AVAILABLE BMP'S.

BMPS	YEAR 2017								
Month No.	6	7	8	9	10	11			
Pipe Slope Drains									
Energy Dissipaters									
Temporary Diversion Dikes									
Check Dams									
Temporary Seeding and Planting									
Permanent Seeding and Planting				X	X				
Mycorrhizae/ Biofertilizers									
Mulches (Straw 2 tons per acre)									
Construction Entrance	X	X	X						
Compost Blankets									
Compost Socks									
Compost Berm									
Soil Tackifiers									
Sodding Vegetative Buffer Strips									
Plastic Sheeting									
Sediment Fencing	X	X	X	X	X				
Erosion Control Blankets & Mats (Specify type)									
Earth Dikes (Stabilized)									
Drainage Swales									
Rock Outlet Protection									
Sediment Trap									
Straw Wattles (Loose compaction rice straw)									
Storm Drain Inlet Protection	X	X	X	X					
Temporary or Permanent Sedimentation Basins									
Unpaved roads graveled or other BMP on the road									
Dewatering (treatment location, schematic, & sampling plan required)									
Paving Operations Controls									
Concrete Truck Washout				X	X				

** SIGNIFIES BMP THAT WILL BE INSTALLED PRIOR TO ANY GROUND DISTURBING ACTIVITY.

SHEET INDEX

EROSION AND SEDIMENT CONTROL PLANS

C-29A EROSION AND SEDIMENT CONTROL COVER SHEET
C-29B CLEARING AND DEMOLITION EROSION AND SEDIMENT CONTROL PLAN
C-29C TREE REMOVAL AND PROTECTION PLAN
C-29D AREA A – GRADING, STREET AND UTILITY CONSTRUCTION EROSION AND SEDIMENT CONTROL PLAN
C-29E AREA B – GRADING, STREET AND UTILITY CONSTRUCTION EROSION AND SEDIMENT CONTROL PLAN
C-29F AREA C – GRADING, STREET AND UTILITY CONSTRUCTION EROSION AND SEDIMENT CONTROL PLAN
C-29G EROSION AND SEDIMENT CONTROL DETAILS

REGISTERED PROFESSIONAL ENGINEER 7126 OREGON JULY 15, 1971 BRUCE D. GOLDSON

EXPIRES: 06/30/2017
SIGNATURE DATE: 05/25/2017

EROSION CONTROL COVER

2015-129M

DESIGNED: BDG				
DRAWN: BJS				
SCALE: 1" = 60'	05/24/2017	2	MODIFICATION PER REVIEW BY CITY STAFF	
DATE: March, 2016	04/10/2017	1	REVIEW PER INITIAL CITY REVIEW	
FILE: Rosemont Civil1	DATE	NO.	REVISION	

Theta, llc
ENGINEERING - SURVEYING - PLANNING
PO Box 1345
Lake Oswego, Oregon 97035
503/481-8822
email: thetaeng@comcast.net

Icon Construction & Development, LLC
1980 Willamette Falls Drive, Suite 200
West Linn, OR 97068
PH: (503) 657-0406

Tanner Ridge at Rosemont
1270 Rosemont Road
West Linn, Oregon

SHEET:
C-28A

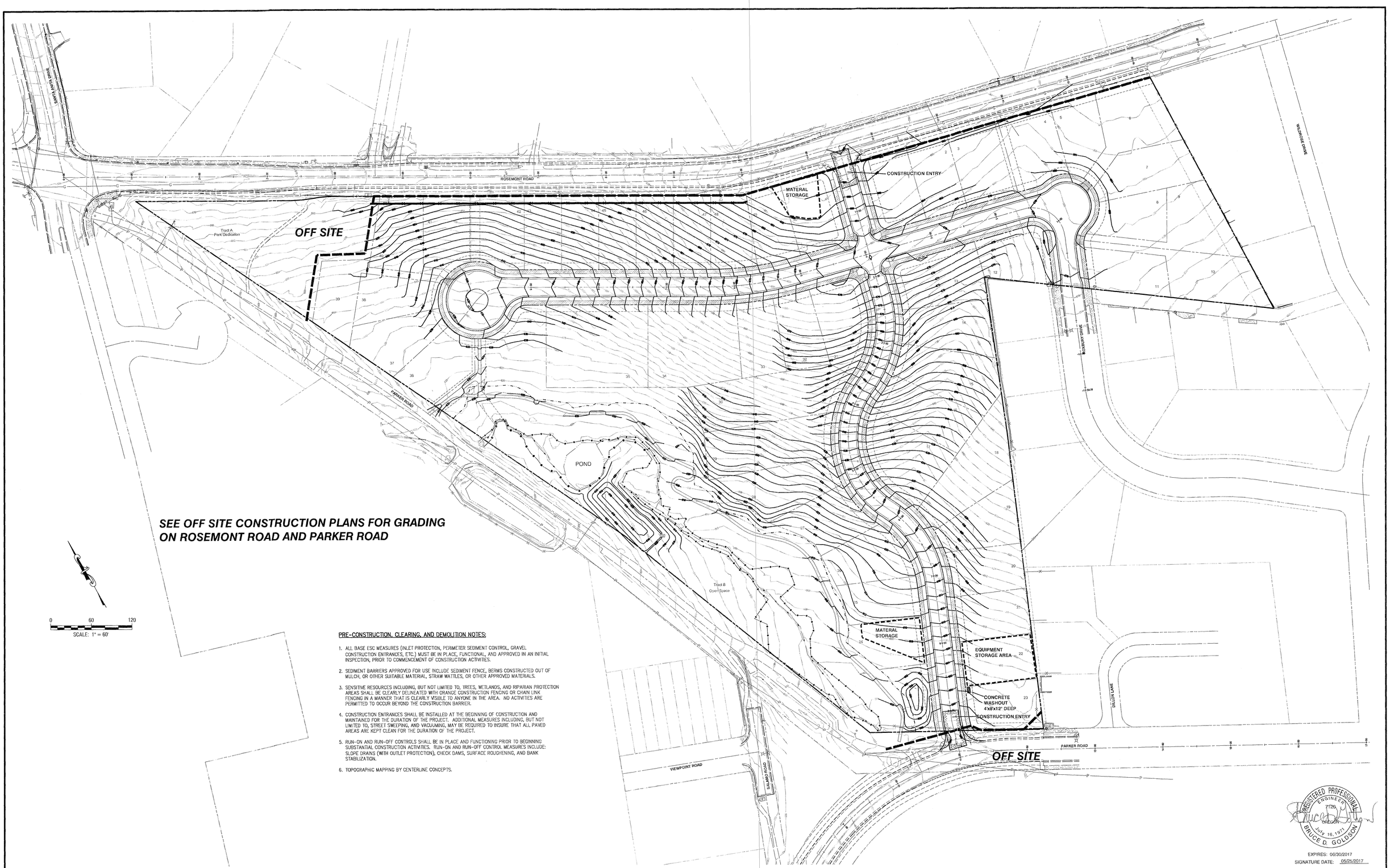

PRE-CONSTRUCTION, CLEARING, AND DEMOLITION NOTES:

1. ALL BASE ESC MEASURES (INLET PROTECTION, PERIMETER SEDIMENT CONTROL, GRAVEL CONSTRUCTION ENTRANCES, ETC.) MUST BE IN PLACE, FUNCTIONAL, AND APPROVED IN AN INITIAL INSPECTION, PRIOR TO COMMENCEMENT OF CONSTRUCTION ACTIVITIES.
2. SEDIMENT BARRIERS APPROVED FOR USE INCLUDE SEDIMENT FENCE, BERMS CONSTRUCTED OUT OF MULCH, OR OTHER SUITABLE MATERIAL, STRAW WATTLES, OR OTHER APPROVED MATERIALS.
3. SENSITIVE RESOURCES INCLUDING, BUT NOT LIMITED TO, TREES, WETLANDS, AND RIPARIAN PROTECTION AREAS SHALL BE CLEARLY DELINEATED WITH ORANGE CONSTRUCTION FENCING OR CHAIN LINK FENCING IN A MANNER THAT IS CLEARLY VISIBLE TO ANYONE IN THE AREA. NO ACTIVITIES ARE PERMITTED TO OCCUR BEYOND THE CONSTRUCTION BARRIER.
4. CONSTRUCTION ENTRANCES SHALL BE INSTALLED AT THE BEGINNING OF CONSTRUCTION AND MAINTAINED FOR THE DURATION OF THE PROJECT. ADDITIONAL MEASURES INCLUDING, BUT NOT LIMITED TO, STREET SWEEPING, AND VACUUMING, MAY BE REQUIRED TO INSURE THAT ALL PAVED AREAS ARE KEPT CLEAN FOR THE DURATION OF THE PROJECT.
5. RUN-ON AND RUN-OFF CONTROLS SHALL BE IN PLACE AND FUNCTIONING PRIOR TO BEGINNING SUBSTANTIAL CONSTRUCTION ACTIVITIES. RUN-ON AND RUN-OFF CONTROL MEASURES INCLUDE: SLOPE DRAINS (WITH OUTLET PROTECTION), CHECK DAMS, SURFACE ROUGHENING, AND BANK STABILIZATION.
6. TOPOGRAPHIC MAPPING BY CENTERLINE CONCEPTS.

REGISTERED PROFESSIONAL ENGINEER 7726 OREGON JULY 16, 1971 BRUCE D. GOLDSON

EXPIRES: 06/30/2017
SIGNATURE DATE: 05/25/2017

CLEARING AND DEMOLITION EROSION AND SEDIMENT CONTROL PLAN

2015-129M

DESIGNED:	BDG			
DRAWN:	BJS			
SCALE:	1" = 60'	05/24/2017	2	MODIFICATION PER REVIEW BY CITY STAFF
DATE:	March, 2016	04/10/2017	1	REVIEW PER INITIAL CITY REVIEW
FILE:	Rosemont Civil1	DATE	NO.	REVISION

Theta, llc
ENGINEERING - SURVEYING - PLANNING
PO Box 1345
Lake Oswego, Oregon 97035
503/481-8822
email: thetaeng@comcast.net

Icon Construction & Development, LLC
1980 Willamette Falls Drive, Suite 200
West Linn, OR 97068
PH: (503) 657-0406

Tanner Ridge at Rosemont
1270 Rosemont Road
West Linn, Oregon

SHEET:
C-28B

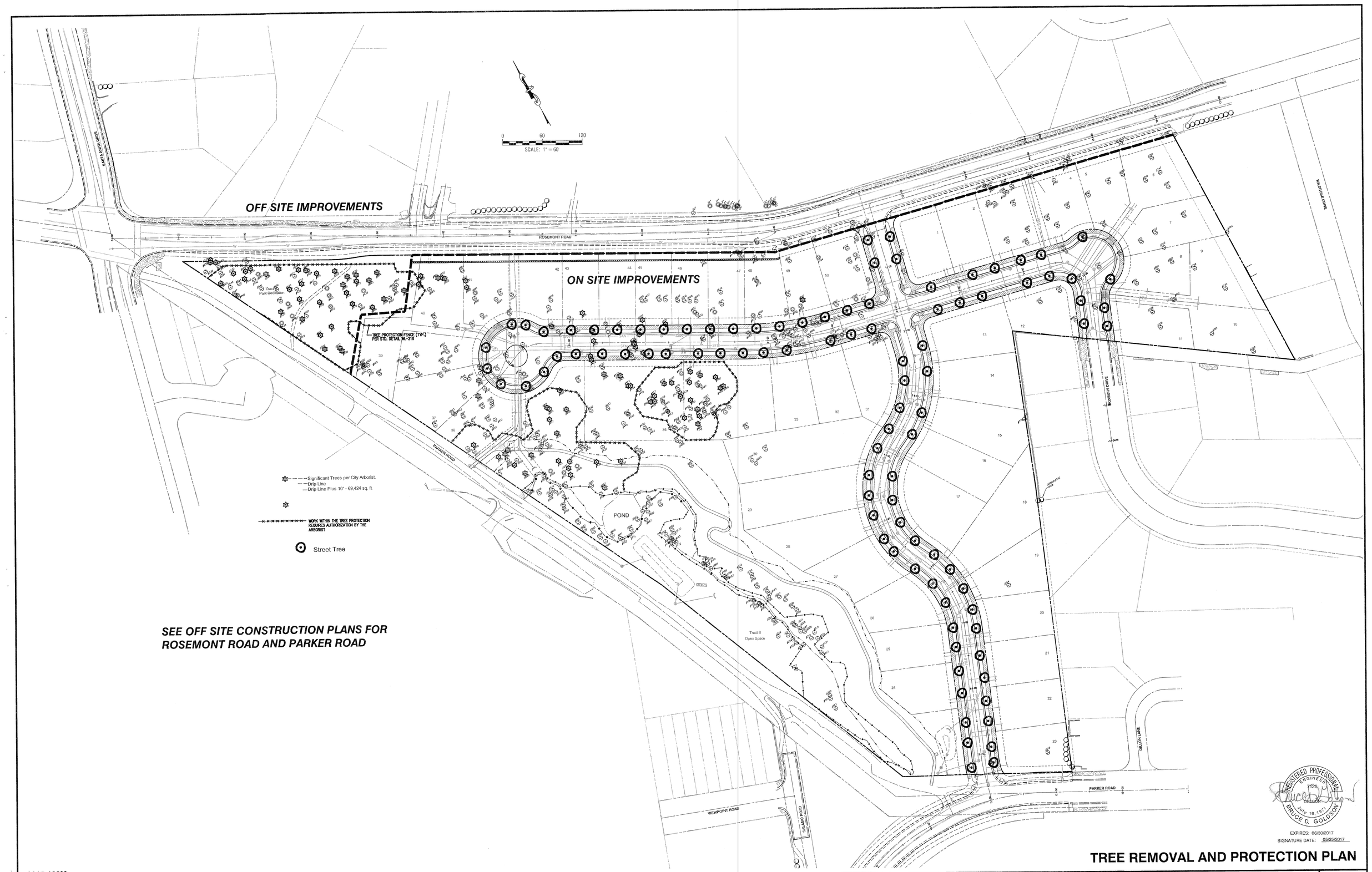

REGISTERED PROFESSIONAL ENGINEER
7120
OREGON
July 16, 1971
BRUCE D. GOLDSON

EXPIRES: 06/30/2017
SIGNATURE DATE: 05/25/2017

TREE REMOVAL AND PROTECTION PLAN

2015-129M

DESIGNED:	BDG			
DRAWN:	BJS			
SCALE:	1" = 60'	05/24/2017	2	MODIFICATION PER REVIEW BY CITY STAFF
DATE:	March, 2016	04/10/2017	1	REVIEW PER INITIAL CITY REVIEW
FILE:	Rosemont Civil1	DATE	NO.	REVISION

Theta, llc
ENGINEERING - SURVEYING - PLANNING
PO Box 1345
Lake Oswego, Oregon 97035
503/481-8822
email: thetaeng@comcast.net

Icon Construction & Development, LLC
1980 Willamette Falls Drive, Suite 200
West Linn, OR 97068
PH: (503) 657-0406

Tanner Ridge at Rosemont
1270 Rosemont Road
West Linn, Oregon

SHEET:
C-28C

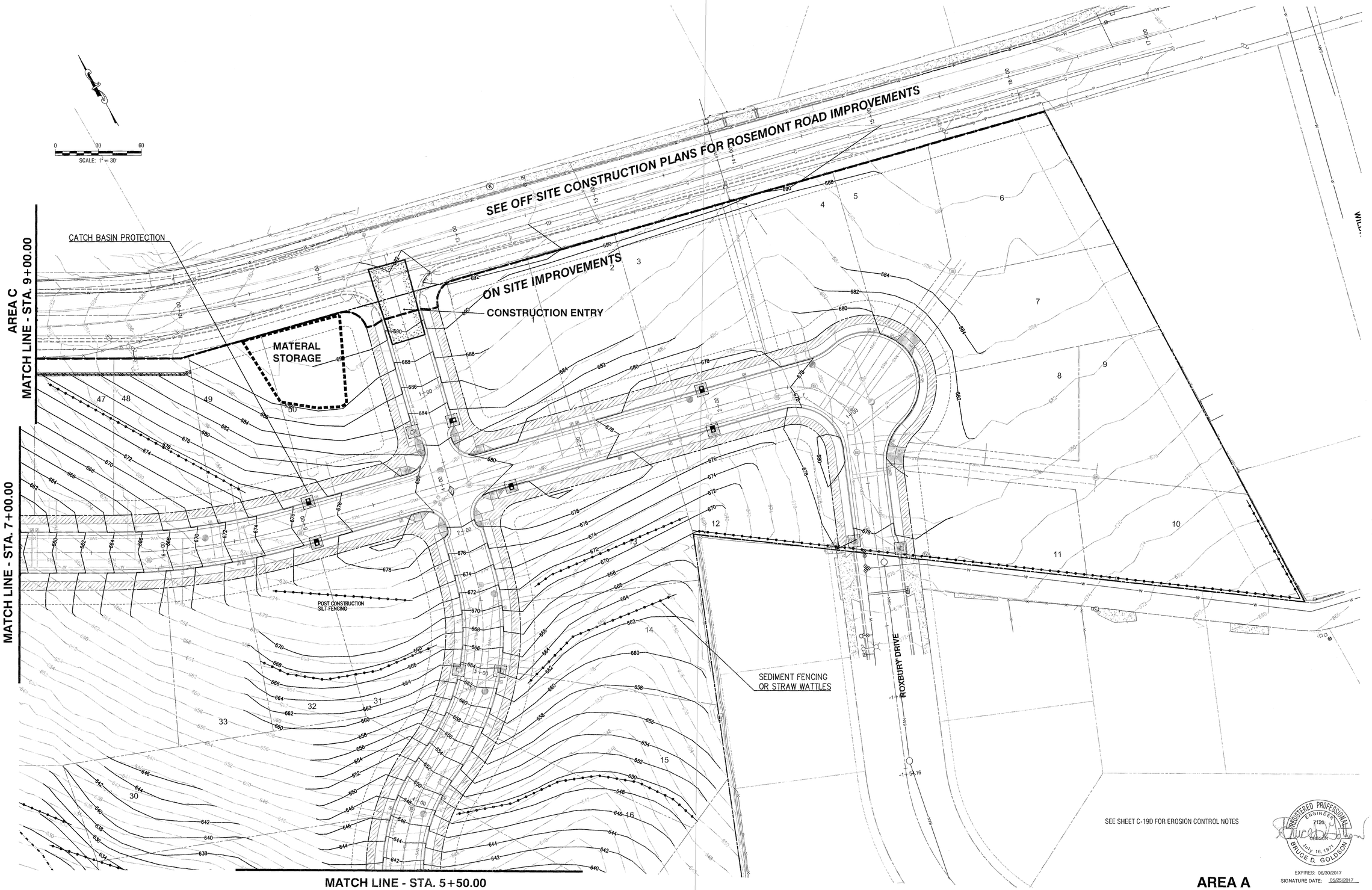

SEE SHEET C-19D FOR EROSION CONTROL NOTES

REGISTERED PROFESSIONAL ENGINEER 7129 OREGON JULY 16, 1977 BRUCE D. GOLDSON

EXPIRES: 06/30/2017
SIGNATURE DATE: 05/25/2017

AREA A
EROSION AND SEDIMENT CONTROL PLAN
GRADING, STREET AND UTILITY CONSTRUCTION

2015-129M

DESIGNED:	BDG			
DRAWN:	BJS			
SCALE:	1" = 60'	05/24/2017	2	MODIFICATION PER REVIEW BY CITY STAFF
DATE:	March, 2016	04/10/2017	1	REVIEW PER INITIAL CITY REVIEW
FILE:	Rosemont Civil1	DATE	NO.	REVISION

Theta, llc
ENGINEERING - SURVEYING - PLANNING
PO Box 1345
Lake Oswego, Oregon 97035
503/481-8822
email: thetaeng@comcast.net

Icon Construction & Development, LLC
1980 Willamette Falls Drive, Suite 200
West Linn, OR 97068
PH: (503) 657-0406

Tanner Ridge at Rosemont
1270 Rosemont Road
West Linn, Oregon

SHEET: C-28D

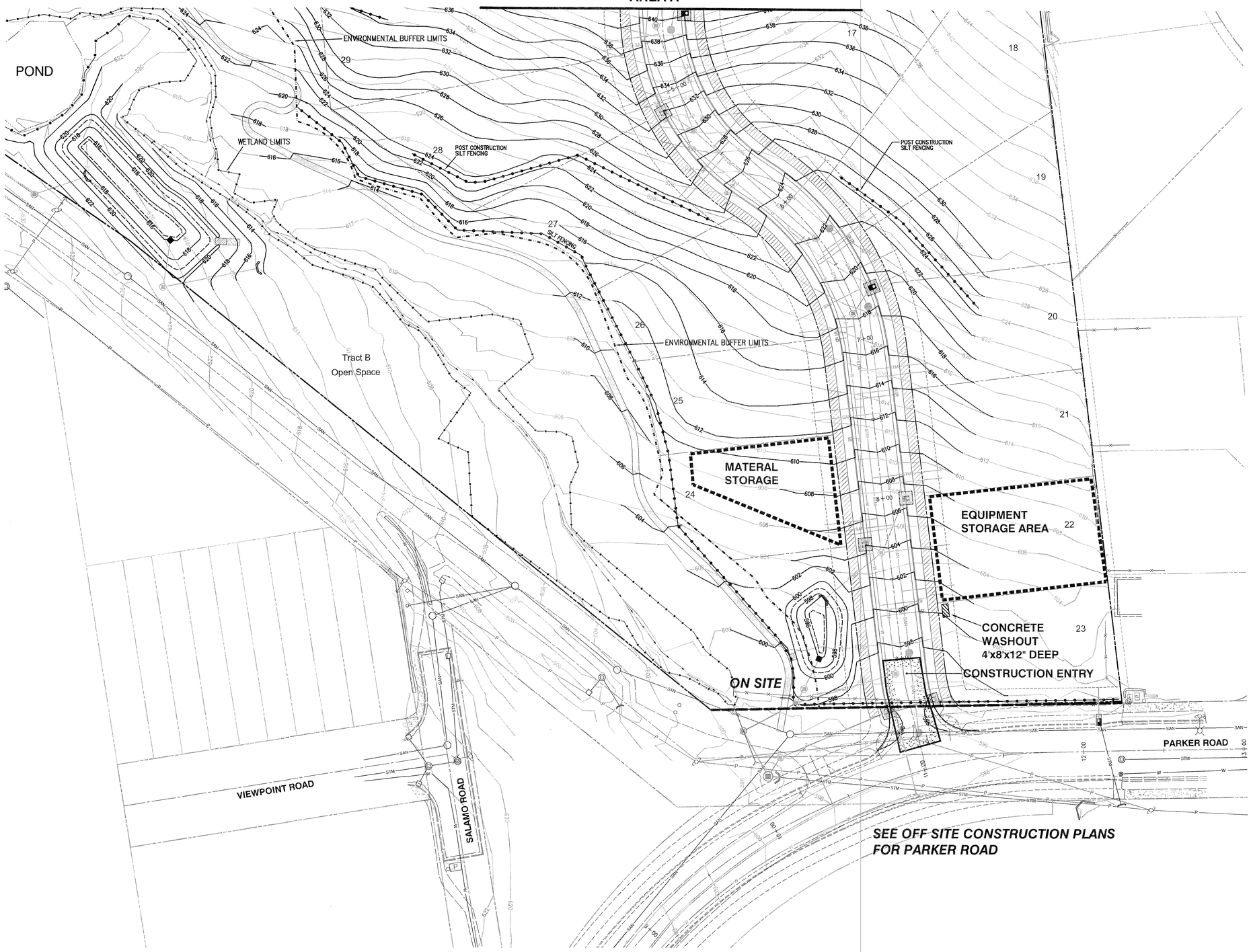

0 30 60
SCALE: 1" = 30'

GRADING, STREET AND UTILITY EROSION AND SEDIMENT CONSTRUCTION NOTES:

1. SEED USED FOR TEMPORARY OR PERMANENT SEEDING SHALL BE COMPOSED OF ONE OF THE FOLLOWING MIXTURES, UNLESS OTHERWISE AUTHORIZED:
   DWARF GRASS MIX (MIN. 100 LB./AC.)
   1. DWARF PERENNIAL RYEGRASS (80% BY WEIGHT)
   2. CREEPING RED FESCUE (20% BY WEIGHT)
2. SLOPE TO RECEIVE TEMPORARY OR PERMANENT SEEDING SHALL HAVE THE SURFACE ROUGHENED BY MEANS OF TRACK-WALKING OR THE USE OF OTHER APPROVED IMPLEMENTS. SURFACE ROUGHENING IMPROVES SEED BEDDING AND REDUCES RUN-OFF VELOCITY.
3. LONG TERM SLOPE STABILIZATION MEASURES SHALL INCLUDE THE ESTABLISHMENT OF PERMANENT VEGETATIVE COVER VIA SEEDING WITH APPROVED MIX AND APPLICATION RATE.
4. TEMPORARY SLOPE STABILIZATION MEASURES SHALL INCLUDE: COVERING EXPOSED SOIL WITH STRAW MULCHING OR OTHER APPROVED MEASURES.
5. STOCKPILED SOIL OR STRIPPINGS SHALL BE PLACED IN A STABLE LOCATION AND CONFIGURATION. DURING "WET WEATHER" PERIODS, STOCKPILES SHALL BE COVERED WITH STRAW MULCH. SEDIMENT FENCE IS REQUIRED AROUND THE PERIMETER OF THE STOCKPILE.
6. EXPOSED CUT OR FILL AREAS SHALL BE STABILIZED THROUGH THE USE OF TEMPORARY SEEDING AND MULCHING, EROSION CONTROL BLANKETS OR MATS, MID-SLOPE SEDIMENT FENCES OR WATTLES, OR OTHER APPROPRIATE MEASURES. SLOPES EXCEEDING 25% MAY REQUIRE ADDITIONAL EROSION CONTROL MEASURES.
7. AREAS SUBJECT TO WIND EROSION SHALL USE APPROPRIATE DUST CONTROL MEASURES INCLUDING THE APPLICATION OF A FINE SPRAY OF WATER OR OTHER APPROVED MEASURES.
8. CONSTRUCTION ENTRANCES SHALL BE INSTALLED AT THE BEGINNING OF CONSTRUCTION AND MAINTAINED FOR THE DURATION OF THE PROJECT. ADDITIONAL MEASURES INCLUDING, BUT NOT LIMITED TO, TIRE WASHES, STREET SWEEPING, AND VACUUMING MAY BE BE REQUIRED TO INSURE THAT ALL PAVED AREAS ARE KEPT CLEAN FOR THE DURATION OF THE PROJECT.
9. ACTIVE INLETS TO STORM WATER SYSTEMS SHALL BE PROTECTED THROUGH THE USE OF APPROVED INLET PROTECTION MEASURES. ALL INLET PROTECTION MEASURES ARE TO BE REGULARLY INSPECTED AND MAINTAINED AS NEEDED.
10. SATURATED MATERIALS THAT ARE HAULED OFF-SITE MUST BE TRANSPORTED IN WATER-TIGHT TRUCKS TO ELIMINATE SPILLAGE OF SEDIMENT AND SEDIMENT-LADEN WATER.
11. AN AREA SHALL BE PROVIDED FOR THE WASHING OUT OF CONCRETE TRUCKS IN A LOCATION THAT DOES NOT PROVIDE RUN-OFF THAT CAN ENTER THE STORM WATER SYSTEM. IF THE CONCRETE WASH-OUT AREA CAN NOT BE CONSTRUCTED GREATER THAN 50' FROM ANY DISCHARGE POINT, SECONDARY MEASURES SUCH AS BERMS OR TEMPORARY SETTLING PITS MAY BE REQUIRED. THE WASH-OUT SHALL BE LOCATED WITHIN SIX FEET OF TRUCK ACCESS AND BE CLEANED WHEN IT REACHES 50% OF THE CAPACITY.
12. SWEEPINGS FROM EXPOSED AGGREGATE CONCRETE SHALL NOT BE TRANSFERRED TO THE STORM WATER SYSTEM. SWEEPINGS SHALL BE PICKED UP AND DISPOSED IN THE TRASH.
13. AVOID PAVING IN WET WEATHER WHEN PAVING CHEMICALS CAN RUN-OFF INTO THE STORM WATER SYSTEM.
14. USE BMPs SUCH AS CHECK-DAMS, BERMS, AND INLET PROTECTION TO PREVENT RUN-OFF FROM REACHING DISCHARGE POINTS.
15. COVER CATCH BASINS, MANHOLES, AND OTHER DISCHARGE POINTS WHEN APPLYING SEAL COAT, TACK COAT, ETC. TO PREVENT INTRODUCING THESE MATERIALS TO THE STORM WATER SYSTEM.

EROSION AND SEDIMENT CONTROL BMP IMPLEMENTATION:

1. ALL BASE ESC MEASURES (INLET PROTECTION, PERIMETER SEDIMENT CONTROL, GRAVEL CONSTRUCTION ENTRANCES, ETC.) MUST BE IN PLACE, FUNCTIONAL, AND APPROVED IN AN INITIAL INSPECTION, PRIOR TO COMMENCEMENT OF CONSTRUCTION ACTIVITIES.
2. THE "STAGING, EQUIPMENT MAINTENANCE, FUELING, PORTA-POTTY, AND SOLID WASTE AREA" IS AS SHOWN ON PLAN.
3. ALL "SEDIMENT BARRIERS (TO BE INSTALLED AFTER GRADING)" SHALL BE INSTALLED IMMEDIATELY FOLLOWING ESTABLISHMENT OF FINISHED GRADE AS SHOWN ON THESE PLANS.
4. LONG TERM SLOPE STABILIZATION MEASURES "INCLUDING MATTING" SHALL BE IN PLACE OVER ALL EXPOSED SOILS BY OCTOBER 1.
5. THE STORM WATER FACILITY SHALL BE CONSTRUCTED AND LANDSCAPED PRIOR TO THE STORM WATER SYSTEM FUNCTIONING AND SITE PAVING.
6. INLET PROTECTION SHALL BE IN-PLACE IMMEDIATELY FOLLOWING PAVING ACTIVITIES.

REGISTERED PROFESSIONAL ENGINEER
7120
OREGON
July 16, 1971
BRUCE D. GOLDSON

EXPIRES: 06/30/2017
SIGNATURE DATE: 05/25/2017

AREA B
EROSION AND SEDIMENT CONTROL PLAN
GRADING, STREET AND UTILITY CONSTRUCTION

2015-129M

DESIGNED:	BDG			
DRAWN:	BJS			
SCALE:	1" = 60'	05/24/2017	2	MODIFICATION PER REVIEW BY CITY STAFF
DATE:	March, 2016	04/10/2017	1	REVIEW PER INITIAL CITY REVIEW
FILE:	Rosemont Civil1	DATE	NO.	REVISION

Theta, llc
ENGINEERING - SURVEYING - PLANNING
PO Box 1345
Lake Oswego, Oregon 97035
503/481-8822
email: thetaeng@comcast.net

Icon Construction & Development, LLC
1980 Willamette Falls Drive, Suite 200
West Linn, OR 97068
PH: (503) 657-0406

Tanner Ridge at Rosemont
1270 Rosemont Road
West Linn, Oregon

SHEET:
C-28E

F:\Acad\Rosemont\Rosemont Civil1.dwg, 5/25/2017 1:55:58 PM

SANTA ANITA DRIVE

ROSEMONT ROAD

SEE OFF SITE CONSTRUCTION PLANS FOR ROSEMONT ROAD IMPROVEMENTS

ON SITE IMPROVEMENTS

OFF SITE IMPROVEMENTS

Tract A
Park Dedication

POST CONSTRUCTION SILT FENCING

POST CONSTRUCTION SILT FENCING

ENVIRONMENTAL BUFFER LIMITS

WETLAND LIMITS

PARKER ROAD

MATCH LINE - STA. 9+00.00
AREA A

MATCH LINE - STA. 7+00.00
AREA A

0 30 60
SCALE: 1" = 30'

REGISTERED PROFESSIONAL ENGINEER
7120
OREGON
JULY 16, 1971
BRUCE D. GOLDSON

EXPIRES: 06/30/2017
SIGNATURE DATE: 05/25/2017

AREA C
EROSION AND SEDIMENT CONTROL PLAN
GRADING, STREET AND UTILITY CONSTRUCTION

2015-129M

DESIGNED:	BDG			
DRAWN:	BJS			
SCALE:	1" = 60'	05/24/2017	2	MODIFICATION PER REVIEW BY CITY STAFF
DATE:	March, 2016	04/10/2017	1	REVIEW PER INITIAL CITY REVIEW
FILE:	Rosemont Civil1	DATE	NO.	REVISION

Theta, llc
ENGINEERING - SURVEYING - PLANNING
PO Box 1345
Lake Oswego, Oregon 97035
503/481-8822
email: thetaeng@comcast.net

Icon Construction & Development, LLC
1980 Willamette Falls Drive, Suite 200
West Linn, OR 97068
PH: (503) 657-0406

Tanner Ridge at Rosemont
1270 Rosemont Road
West Linn, Oregon

SHEET:
C-28F

F:\Acad\Rosemont\Rosemont Civil1.dwg, 6/22/2017 1:05:28 PM

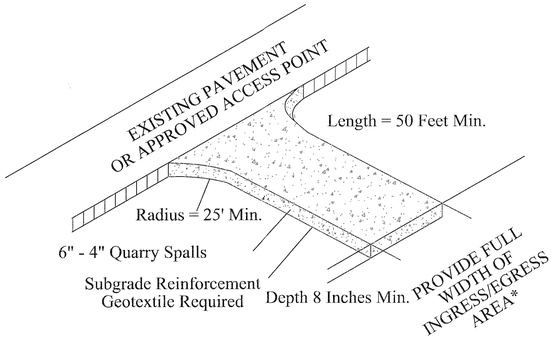

*20' MIN. FOR SINGLE FAMILY AND DUPLEX RESIDENTIAL
AND ALL CONSTRUTION SITES

Construction Entrance

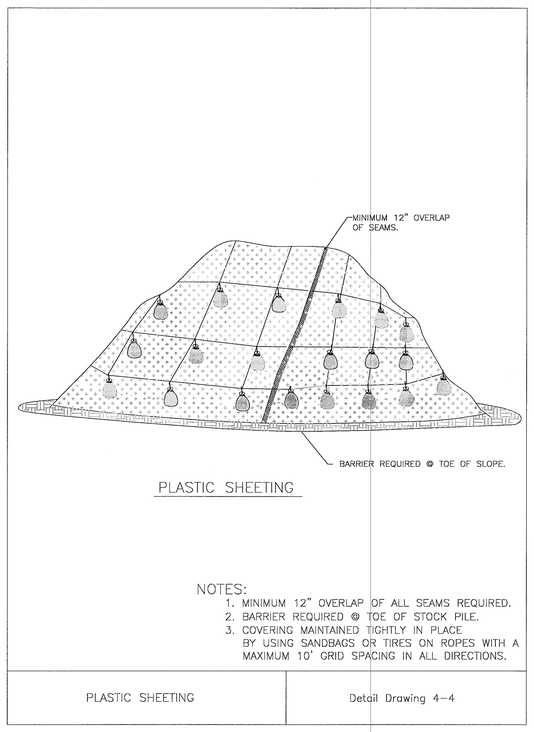

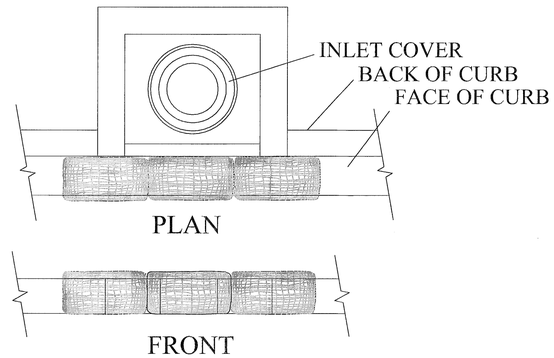

Ensure that no gaps exist between bags and 1/2 bag overlap of opening.

CURB INLET

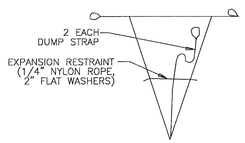

BAG DETAIL

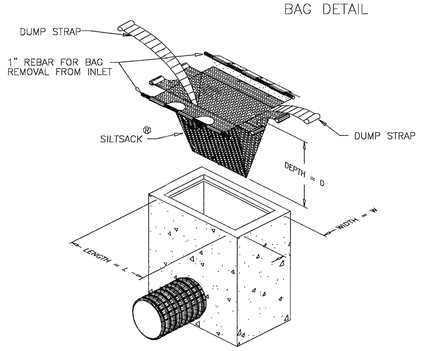

Regular Flow Only
Do not use High Flow Insert Bags.

Catch Basin Insert Bag

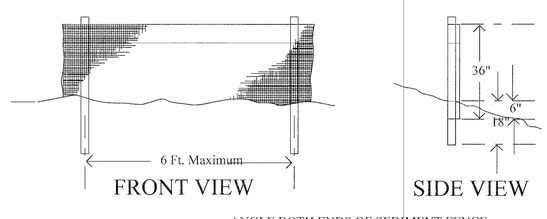

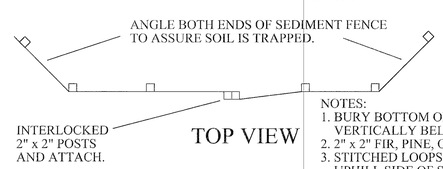

NOTES:
1. BURY BOTTOM OF FILTER FABRIC 6" MIN. VERTICALLY BELOW GRADE.
2. 2" x 2" FIR, PINE, OR STEEL FENCE POSTS.
3. STITCHED LOOPS TO BE INSTALLED UPHILL SIDE OF SLOPE.
4. COMPACT NATIVE FILL IN ALL AREAS OF FILTER FABRIC TRENCH.

Sediment Fence

NTS

STANDARD DETAILS

2015-129M

DESIGNED:	BDG			
DRAWN:	BJS			
SCALE:	NTS			
DATE:	March, 2016			
FILE:	Rosemont Details	DATE	NO.	REVISION

Theta, llc
ENGINEERING - SURVEYING - PLANNING
PO Box 1345
Lake Oswego, Oregon 97035
503/481-8822
email: thetaeng@comcast.net

Icon Construction & Development, LLC
1980 Willamette Falls Drive, Suite 200
West Linn, OR 97068
PH: (503) 657-0406

Tanner Ridge at Rosemont
1270 Rosemont Road
West Linn, Oregon

SHEET: C-28G

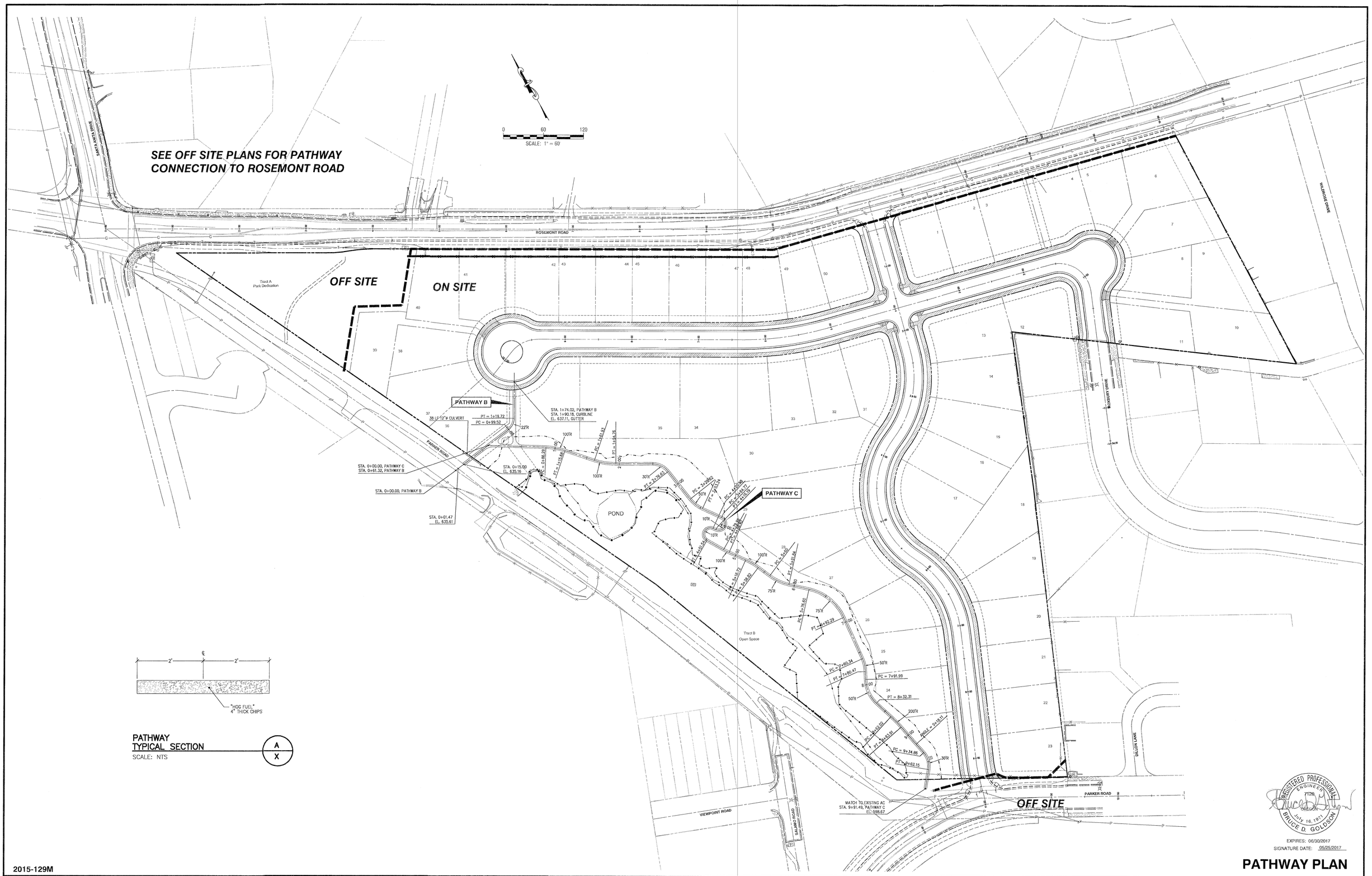

PATHWAY
TYPICAL SECTION (A/X)
SCALE: NTS

REGISTERED PROFESSIONAL ENGINEER
BRUCE D. GOLDSON
OREGON
JULY 16, 1971
EXPIRES: 06/30/2017
SIGNATURE DATE: 05/25/2017

PATHWAY PLAN

2015-129M

DESIGNED:	BDG			
DRAWN:	BJS			
SCALE:	1" = 60'	05/24/2017	2	MODIFICATION PER REVIEW BY CITY STAFF
DATE:	March, 2016	04/10/2017	1	REVIEW PER INITIAL CITY REVIEW
FILE:	Rosemont Civil1	DATE	NO.	REVISION

Theta, llc
ENGINEERING - SURVEYING - PLANNING
PO Box 1345
Lake Oswego, Oregon 97035
503/481-8822
email: thetaeng@comcast.net

Icon Construction & Development, LLC
1980 Willamette Falls Drive, Suite 200
West Linn, OR 97068
PH: (503) 657-0406

Tanner Ridge at Rosemont
1270 Rosemont Road
West Linn, Oregon

SHEET: C-29

P:\Acad\Rosemont\Rosemont Civil1.dwg, 5/25/2017 1:55:55 PM

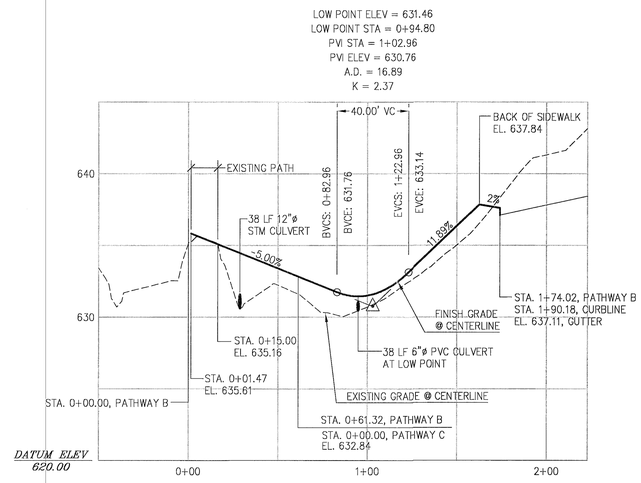

PATHWAY B
CENTERLINE PROFILE

SCALE: 1" = 40' HORIZONTAL
1" = 5' VERTICAL

B
C-31

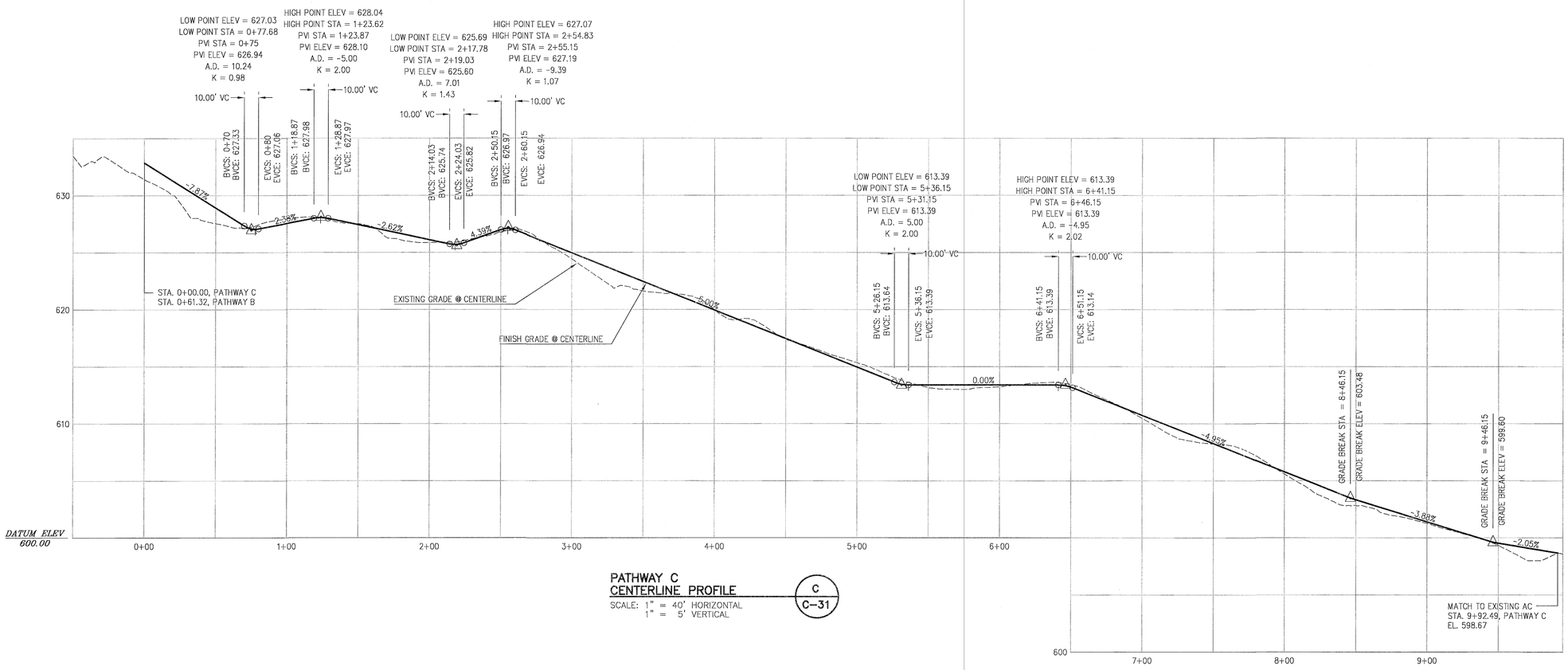

PATHWAY C
CENTERLINE PROFILE

SCALE: 1" = 40' HORIZONTAL
1" = 5' VERTICAL

C
C-31

REGISTERED PROFESSIONAL ENGINEER
7126
OREGON
JULY 16, 1971
BRUCE D. GOLDSON

EXPIRES: 06/30/2017
SIGNATURE DATE: 05/25/2017

PATHWAY PROFILES

2015-129M

DESIGNED:	BDG			
DRAWN:	BJS			
SCALE:	1" = 60'	05/24/2017	2	MODIFICATION PER REVIEW BY CITY STAFF
DATE:	March, 2016	04/10/2017	1	REVIEW PER INITIAL CITY REVIEW
FILE:	Rosemont Civil1	DATE	NO.	REVISION

Theta, llc
ENGINEERING - SURVEYING - PLANNING
PO Box 1345
Lake Oswego, Oregon 97035
503/481-8822
email: thetaeng@comcast.net

Icon Construction & Development, LLC
1980 Willamette Falls Drive, Suite 200
West Linn, OR 97068
PH: (503) 657-0406

Tanner Ridge at Rosemont
1270 Rosemont Road
West Linn, Oregon

SHEET:
C-30

F:\Acad\Rosemont\Rosemont Civil1.dwg, 5/25/2017 2:02:43 PM

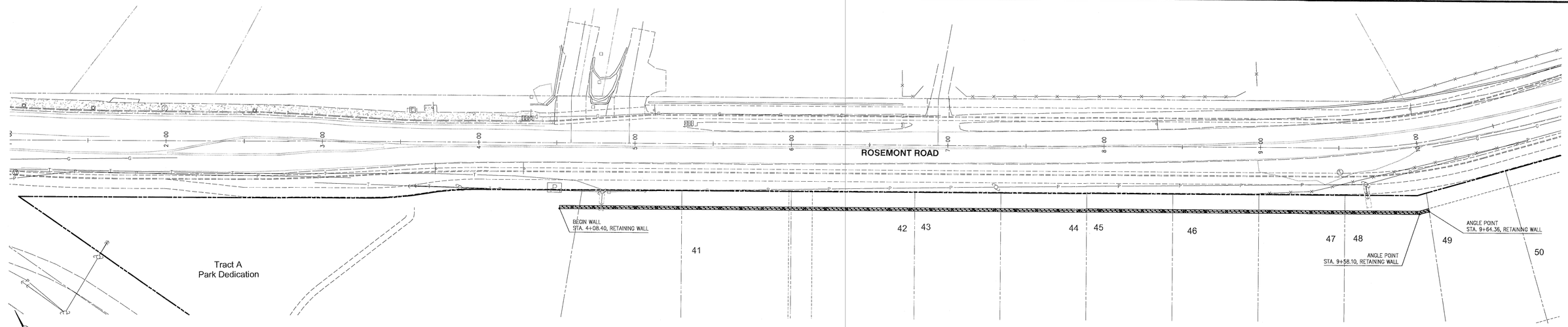

0 30 60
SCALE: 1" = 30'

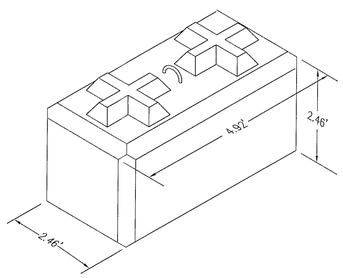

FENCE DETAIL (A / C-32)
SCALE: NTS

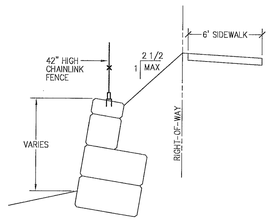

FENCE DETAIL (B / C-32)
SCALE: NTS

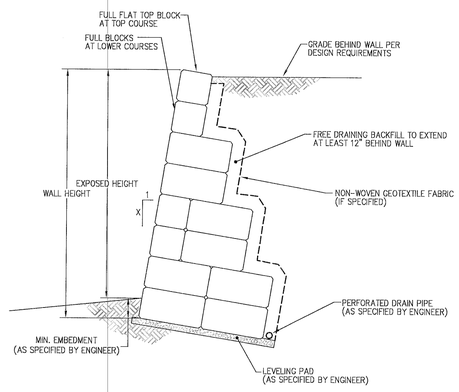

GRAVITY ULTRABLOCK WALL (C / C-32)
SCALE: NTS

SCHEMATIC DESIGN FINAL
DESIGN BY OTHERS

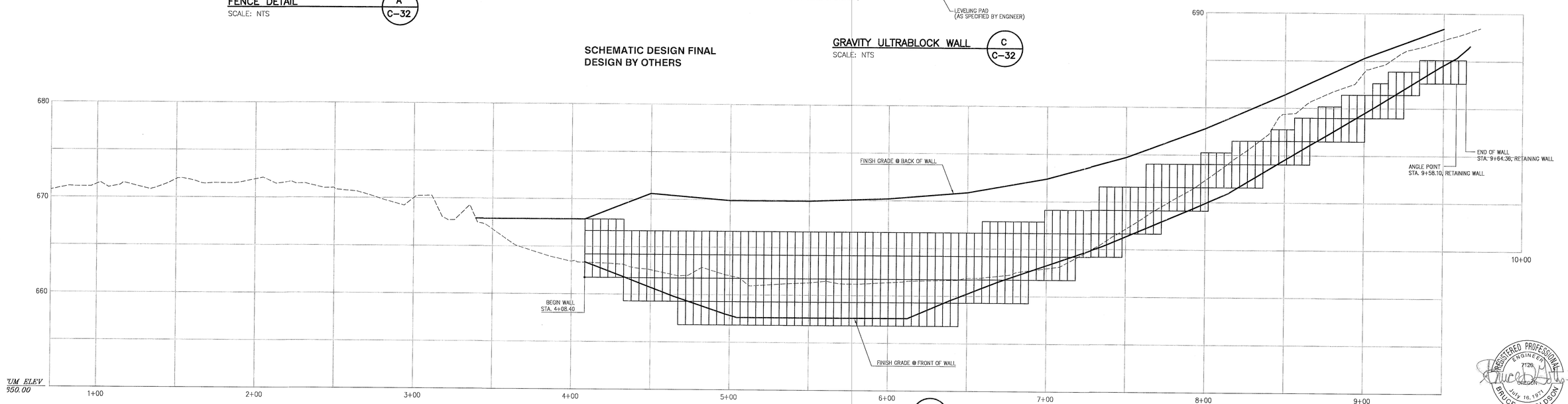

RETAINING WALL PROFILE (1 / C-24)
SCALE: 1" = 30' HORIZONTAL
1" = 5' VERTICAL

REGISTERED PROFESSIONAL ENGINEER
21126
OREGON
July 16, 1971
BRUCE D. GOLDSON
EXPIRES: 06/30/2017
SIGNATURE DATE: 05/25/2017

2015-129M

SCHEMATIC RETAINING WALL PLAN AND PROFILE

DESIGNED:	BDG			
DRAWN:	BJS			
SCALE:	1" = 60'	05/24/2017	2	MODIFICATION PER REVIEW BY CITY STAFF
DATE:	March, 2016	04/10/2017	1	REVIEW PER INITIAL CITY REVIEW
FILE:	Rosemont Civil1	DATE	NO.	REVISION

Theta, llc
ENGINEERING - SURVEYING - PLANNING
PO Box 1345
Lake Oswego, Oregon 97035
503/481-8822
email: thetaeng@comcast.net

Icon Construction & Development, LLC
1980 Willamette Falls Drive, Suite 200
West Linn, OR 97068
PH: (503) 657-0406

Tanner Ridge at Rosemont
1270 Rosemont Road
West Linn, Oregon

SHEET:
C-31

THIS DETAIL DRAWING SHALL NOT BE ALTERED OR CHANGED IN ANY MANNER EXCEPT BY THE CITY ENGINEER. IT IS THE RESPONSIBILITY OF THE USER TO ACQUIRE THE MOST CURRENT VERSION OF THE DETAIL.

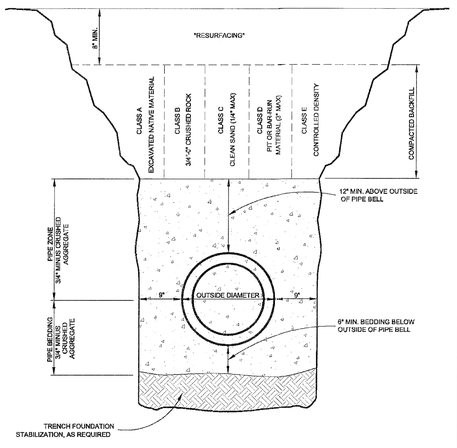

TRENCH BACKFILL BEDDING AND PIPE ZONE

City of West Linn | DATE: 2010 | DRAWING NO. WL-200 | FILE NO.

THIS DETAIL DRAWING SHALL NOT BE ALTERED OR CHANGED IN ANY MANNER EXCEPT BY THE CITY ENGINEER. IT IS THE RESPONSIBILITY OF THE USER TO ACQUIRE THE MOST CURRENT VERSION OF THE DETAIL.

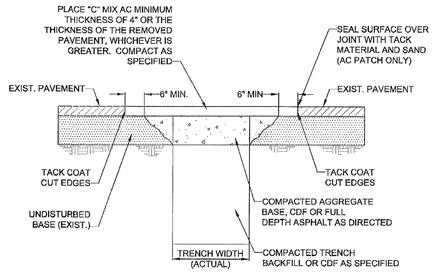

NOTE:

1. ALL EXISTING AC OR PCC PAVEMENT SHALL BE SAWCUT TO NEAT, STRAIGHT LINES PRIOR TO REPAVING.
2. CONCRETE PAVEMENT SHALL BE REPLACED WITH CONCRETE TO A MINIMUM THICKNESS OF REMOVED PAVEMENT, WHICHEVER IS GREATER.
3. IF EXISTING BASE MATERIAL IS CTB OR ATB, THEN REPLACEMENT BASE MATERIAL SHALL MATCH EXISTING.
4. ALL UTILITIES SHALL HAVE A MINIMUM COVER OF 36".
5. ALL TRENCH BACKFILL SHALL BE COMPACTED TO 95% OF MAXIMUM DENSITY PER AASHTO T-180 OR AS SPECIFIED IN THE CONTRACT DOCUMENTS.
6. ALL TRENCH BACKFILL AND PATCHING SHALL CONFORM TO THE STANDARDS AND SPECIFICATIONS OF THE CITY OF WEST LINN.
7. APPROVED CDF SHALL BE USED OR 3/4 - 0" GRAVEL BACKFILL SHALL BE PLACED AND COMPACTED IN 12" MAXIMUM LIFTS. IF 3/4-0" GRAVEL BACKFILL IS USED, COMPACTION TESTING BY A CERTIFIED TESTING COMPANY IS REQUIRED AT DEPTH INTERVALS AS SPECIFIED BY THE CITY ENGINEER.
8. T-CUT MAY BE ENLARGED AT THE DISCRETION OF THE CITY ENGINEER OR CITY INSPECTOR DUE TO SITE CONDITIONS OR PROJECT REQUIREMENTS.
9. ALL CUT EDGES SHALL BE SAND SEALED.
10. COMPACTED BACKFILL OR CDF MUST EXTEND 2 FEET OUTSIDE OF PAVEMENT SURFACE.

STREET T-CUT

City of West Linn | DATE: 2010 | DRAWING NO. WL-203 | FILE NO.

THIS DETAIL DRAWING SHALL NOT BE ALTERED OR CHANGED IN ANY MANNER EXCEPT BY THE CITY ENGINEER. IT IS THE RESPONSIBILITY OF THE USER TO ACQUIRE THE MOST CURRENT VERSION OF THE DETAIL.

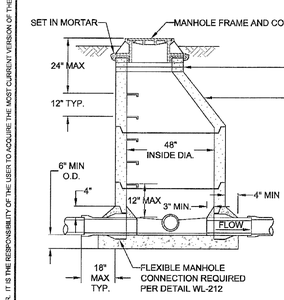

NOTE:
MANHOLE LID TO BE 1' ABOVE FINISH GRADE IN UNPAVED EASEMENTS.

GRADE RINGS - VARIABLE, MAX. 3 LAYERS, 12" MAX

SLOPE OF PRECAST ECCENTRIC CONE SHALL FACE DOWN GRADE

PRECAST SECTIONS AND POURED CONCRETE BASES SHALL CONFORM TO CITY STANDARD SPECIFICATIONS.

ALL JOINTS SHALL BE SEALED WITH WITH PREFORMED PLASTIC OR RUBBER RING TO FORM A WATER TIGHT SEAL.

LOCATE STEPS ON UPSTREAM SIDE OF MANHOLE.

NOTE:
POLYETHYLENE STEPS/IRON REINFORCEMENT 8" x 12" WIDE, 2" DROP, EMBEDDED 3", ON 12" CENTERS (TYPICAL)

MANHOLES SHALL HAVE A 12" MIN. 24" MAX. BOTTOM RISER, TO BE BEDDED IN THE CONCRETE AS THE BASE TAKES ITS INITIAL SET.

SLOPE SHELVES 1:12

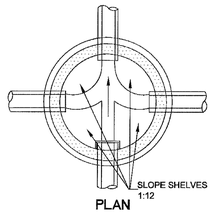

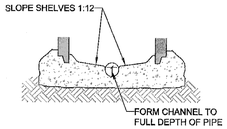

NOTE:
CHANNELS MUST BE ABLE TO PASS A 7"X30" CYLINDER INTO PIPES. SHELF SHALL NOT BE BELOW THE TOP OF THE PIPE.

STANDARD MANHOLE FOR LESS THAN 36" PIPE

City of West Linn | DATE: 2010 | DRAWING NO. WL-207 | FILE NO.

THIS DETAIL DRAWING SHALL NOT BE ALTERED OR CHANGED IN ANY MANNER EXCEPT BY THE CITY ENGINEER. IT IS THE RESPONSIBILITY OF THE USER TO ACQUIRE THE MOST CURRENT VERSION OF THE DETAIL.

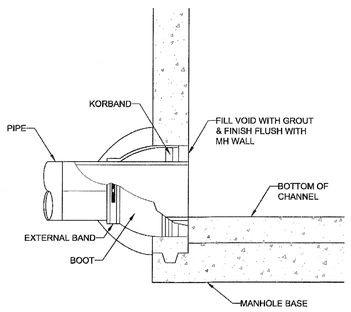

FLEXIBLE MANHOLE CONNECTION
(KOR-N-SEAL OR APPROVED EQUAL)

FLEXIBLE MANHOLE CONNECTION

City of West Linn | DATE: 2010 | DRAWING NO. WL-212 | FILE NO.

THIS DETAIL DRAWING SHALL NOT BE ALTERED OR CHANGED IN ANY MANNER EXCEPT BY THE CITY ENGINEER. IT IS THE RESPONSIBILITY OF THE USER TO ACQUIRE THE MOST CURRENT VERSION OF THE DETAIL.

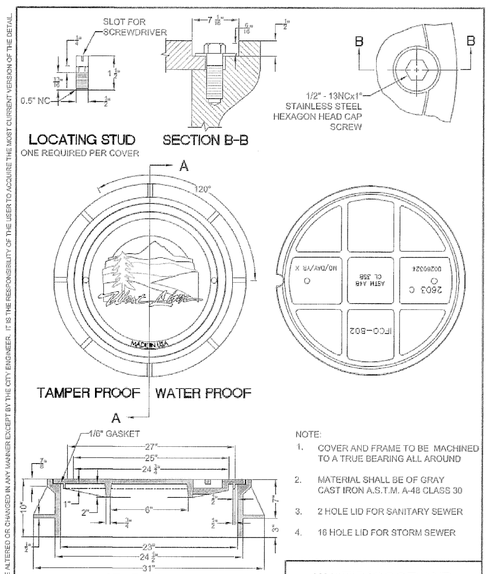

NOTE:

1. COVER AND FRAME TO BE MACHINED TO A TRUE BEARING ALL AROUND
2. MATERIAL SHALL BE OF GRAY CAST IRON A.S.T.M. A-48 CLASS 30
3. 2 HOLE LID FOR SANITARY SEWER
4. 16 HOLE LID FOR STORM SEWER

WATERPROOF AND TAMPERPROOF MANHOLE FRAME AND COVER

City of West Linn | DATE: 2010 | DRAWING NO. WL-214 | FILE NO.

THIS DETAIL DRAWING SHALL NOT BE ALTERED OR CHANGED IN ANY MANNER EXCEPT BY THE CITY ENGINEER. IT IS THE RESPONSIBILITY OF THE USER TO ACQUIRE THE MOST CURRENT VERSION OF THE DETAIL.

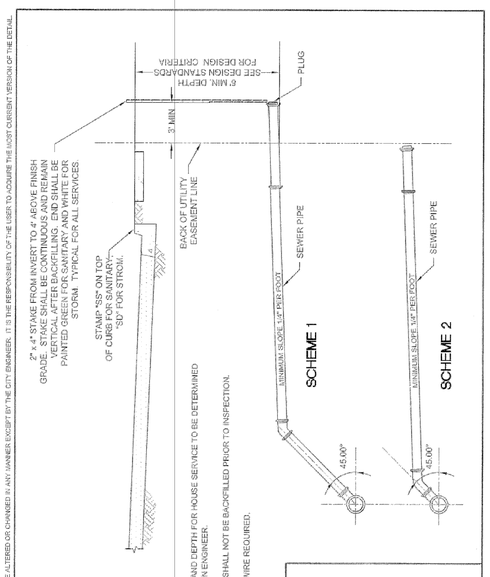

NOTE:

1. SCHEME AND DEPTH FOR HOUSE SERVICE TO BE DETERMINED BY DESIGN ENGINEER.
2. SERVICE SHALL NOT BE BACKFILLED PRIOR TO INSPECTION.
3. TRACER WIRE REQUIRED.

SERVICE BRANCH

City of West Linn | DATE: 2010 | DRAWING NO. WL-218 | FILE NO.

THIS DETAIL DRAWING SHALL NOT BE ALTERED OR CHANGED IN ANY MANNER EXCEPT BY THE CITY ENGINEER. IT IS THE RESPONSIBILITY OF THE USER TO ACQUIRE THE MOST CURRENT VERSION OF THE DETAIL.

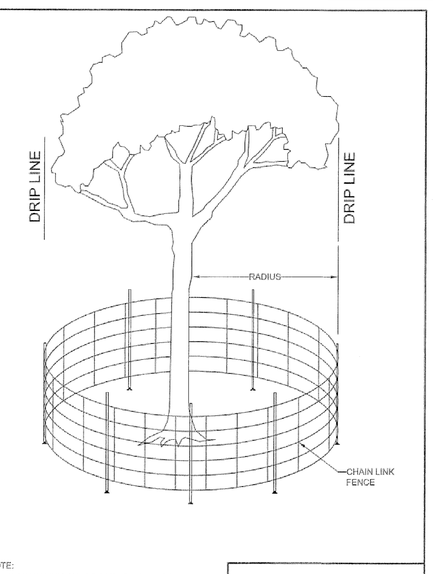

NOTE:

1. 6' CHAIN LINK ON 2" POST AT 10' SPACING, DRIVEN 2' INTO GROUND
2. RADIUS IS EITHER 1/2 PER CALIPER INCH OR 10' OUTSIDE OF DRIPLINE - SEE PLANS

TREE PROTECTION FENCE

City of West Linn | DATE: 2010 | DRAWING NO. WL-219 | FILE NO.

2015-129M

STANDARD DETAILS

DESIGNED:	BDG			
DRAWN:	BJS			
SCALE:	NTS			
DATE:	March, 2016			
FILE:	Rosemont Details	DATE	NO.	REVISION

Theta, llc
ENGINEERING - SURVEYING - PLANNING
PO Box 1345
Lake Oswego, Oregon 97035
503/481-8822
email: thetaeng@comcast.net

Icon Construction & Development, LLC
1980 Willamette Falls Drive, Suite 200
West Linn, OR 97068
PH: (503) 657-0406

Tanner Ridge at Rosemont
1270 Rosemont Road
West Linn, Oregon

SHEET: D-1

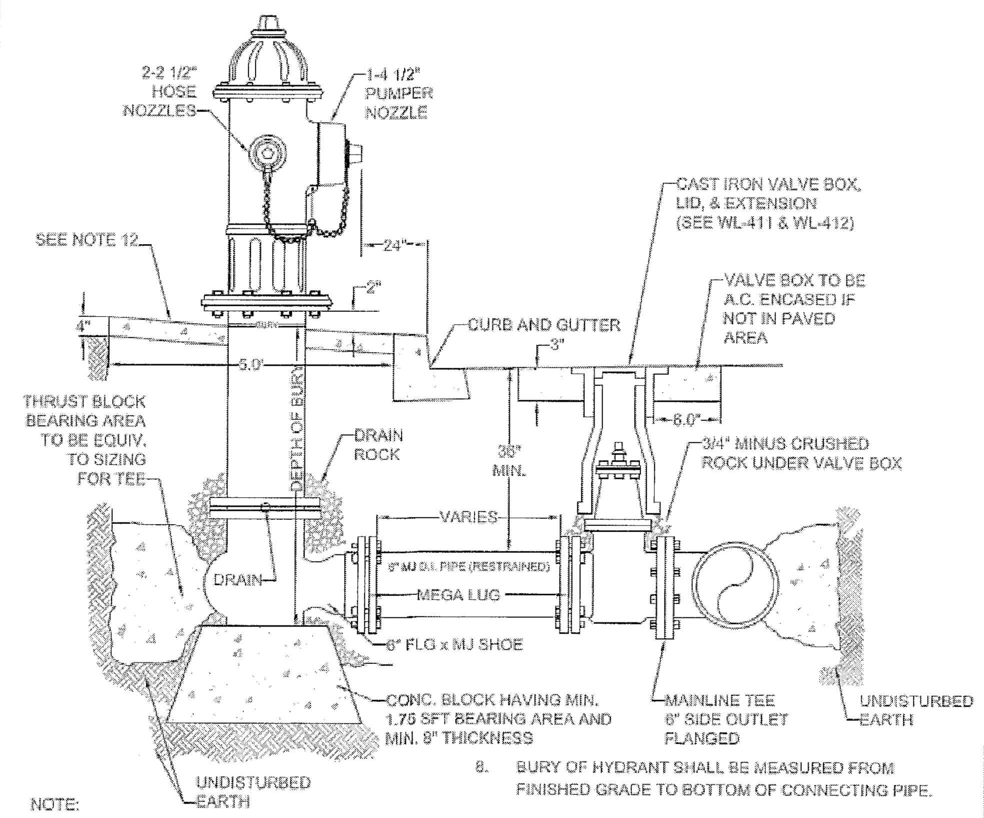

NOTE:

1. HYDRANT TO BE MUELLER CENTURION MDL A-423 ONLY WITH 1 1/2" OPER. NUTS OR CLOW MEDALLION F-2545.
2. HYDRANT COLOR TO BE MILLER EQUIP. ENAMEL 0 E 40 (SAFETY YELLOW).
3. JOINTS TO BE RESTRAINED BY 3/4" DIA. GALVANIZED STEEL RODS AND THRUST BLOCKS OR MEGALUGS AND THRUST BLOCKS.
4. ALL FITTINGS IN CONTACT W/CONCRETE SHALL BE WRAPPED IN PLASTIC, HYDRANT DRAIN HOLES TO REMAIN OPEN TO DRAIN ROCK AND OPERATIONAL.
5. MIN. 4 CFT OF 1 1/2" - 3/4" CLEAN DRAIN ROCK SHALL BE PLACED AROUND SHOE UP TO A MIN. OF 6" ABOVE DRAIN OUTLETS.
6. WHERE PLANTER STRIP EXISTS, HYDRANT SHALL BE PLACED SO THE FRONT PORT IS A MINIMUM OF 24" BEHIND THE FACE OF THE CURB.
7. WHERE INTEGRAL S/W & CURB EXISTS, HYDRANT SHALL BE PLACED AT BACK OF THE SIDEWALK, OR AS DIRECTED BY ENGINEER.
8. BURY OF HYDRANT SHALL BE MEASURED FROM FINISHED GRADE TO BOTTOM OF CONNECTING PIPE.
9. THRUST BLOCK AT FIRE HYDRANT TEE SHALL BE EQUIVALENT TO TEE PIPE SIZING (SEE WL-406).
10. HYDRANT VALVE SHALL BE MUELLER RESILIENT WEDGE GATE VALVE #A-2360-16 ONLY.
11. NO EXTENSIONS ALLOWED
12. HYDRANT SHALL HAVE A 5'x5' x 4" THICK CONCRETE APRON. THERE SHALL BE 2" OF CLEARANCE BETWEEN THE TOP OF THE APRON AND THE BOTTOM OF THE FLANGED BOLT PATTERN OF THE HYDRANT.
13. CONCRETE SHALL BE COMMERCIALLY MIXED WITH A BREAKING STRENGTH OF NOT LESS THAN 3000 PSI.

STANDARD FIRE HYDRANT ASSEMBLY

City of West Linn — DATE: 2010 — DRAWING NO. WL-401 — FILE NO.

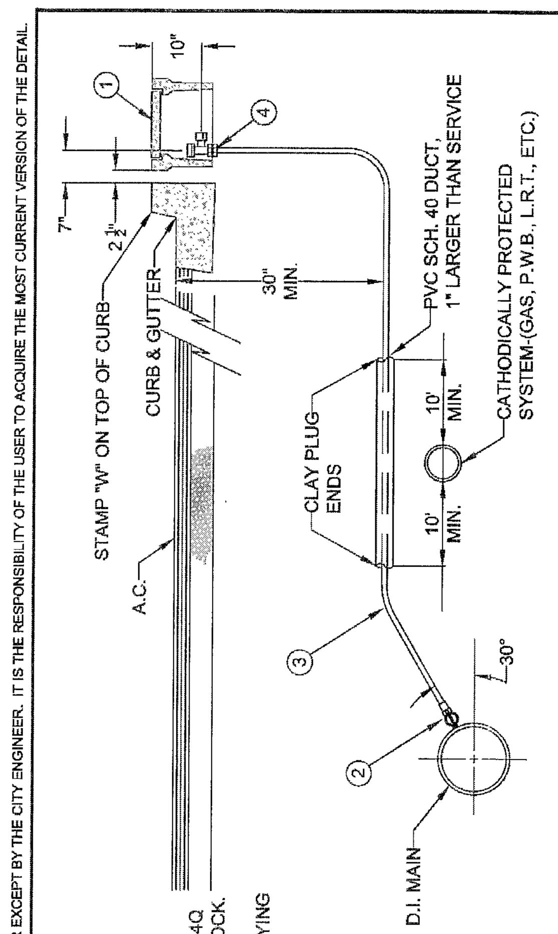

MATERIAL:

1. BROOKS METER BOX, BODY NO. 37, LID AND COVER NO.37-S.
2. MUELLER CORP. STOP NO. H-15008 OR FORD F1000-4Q CORP. STOP WITH OPERATING NUT AT 3 OR 9 O'CLOCK.
3. 1" SOFT TEMPER, TYPE "K" COPPER TUBING COMPLYING WITH ASTM B-88.
4. MUELLER ANGLE METER STOP NO. H-14258 (FORD NO. KV43-444W-Q).

NOTE:

1. MACHINE DRILLED AND TAPPED ONLY. NO HAND DRILLING IS ALLOWED.
2. SUBSTITUTES FOR ANY MATERIALS SHOWN SHALL BE APPROVED BY THE CITY ENGINEER.
3. ALL PIPE AND STRUCTURE ZONE SHALL BE BACKFILLED USING 3/4" MINUS CRUSHED AGG. AND COMPACTED TO 95% MAX DENSITY AS DETERMINED BY AASHTO T-180.
4. WHEN AN ACTIVE CATHODIC PROTECTED SYSTEM IS ENCOUNTERED, SCH. 40 PVC SHALL BE INSTALLED AS SHOWN ABOVE WITH CLAY PLUG.
5. METER BOX SHALL BE CENTERED OVER THE COMPLETED METER ASSEMBLY.
6. TAPS INTO MAIN TO HAVE 18" SEPARATION ON CENTER MINIMUM.
7. ANGLE METER STOPS TO BE 18" FROM PROPERTY LINE AND NOT IN DRIVEWAY APPROACH.
8. METER BOXES IN CURB TIGHT SIDEWALK AND THOSE SUBJECT TO INCIDENTAL AUTO TRAFFIC MUST HAVE METAL LIDS AND BE TRAFFIC RATED.

STANDARD 1" WATER SERVICE

City of West Linn — DATE: 2010 — DRAWING NO. WL-402 — FILE NO.

BLOW-OFF SIZES REQUIRED	
MAIN SIZE	BLOW-OFF SIZE
4" TO 8"	2"

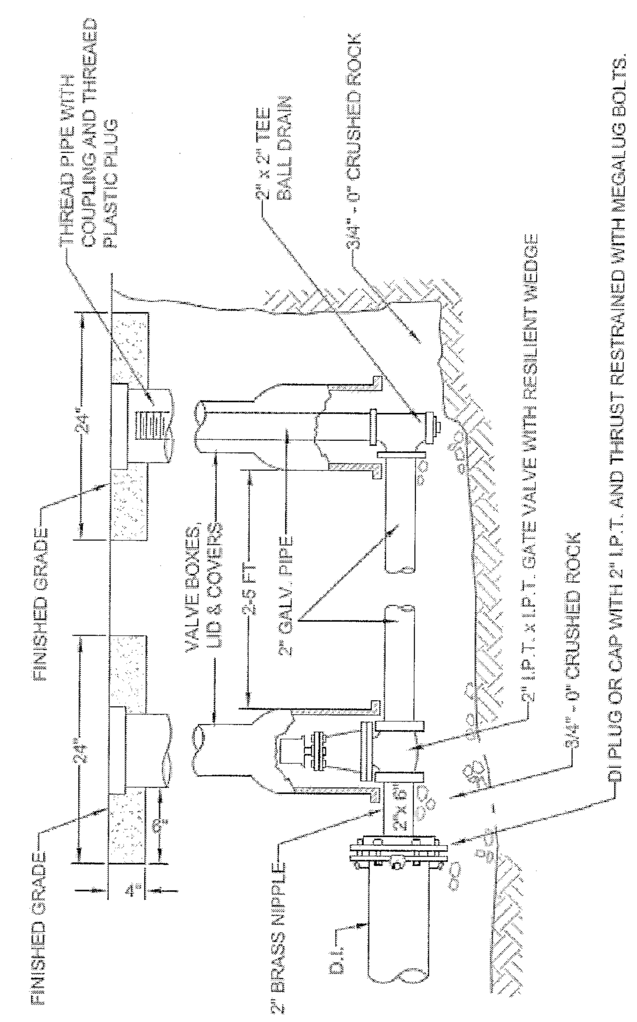

NOTE:

1. VALVE BOX SHALL BE PER STANDARD DETAIL WL-411.
2. VALVE BOX TO BE CONCRETE ENCASED AS SHOWN, IF NOT IN PAVED AREA.
3. BLOW-OFF UNIT SHALL BE BACKFILLED WITH 3/4"-0" CRUSHED ROCK AND COMPACTED TO 95% OF MAXIMUM DENSITY DETERMINED BY AASHTO T-180.
4. PLACE BLOW-OFF STANDPIPE 3 FT. INSIDE R.O.W. LINE AT END OF STREET (2 FT FROM BARRICADE).

STANDARD 2" BLOW-OFF ASSEMBLY

City of West Linn — DATE: 2010 — DRAWING NO. WL-404A — FILE NO.

BLOW-OFF SIZES REQUIRED	
MAIN SIZE	BLOW-OFF SIZE
4" TO 6"	2"
8" TO 12"	4"
14" TO 18"	6"
20" & UP	PER ENGR.

NOTE:

1. BACKFILL WITH SELECT CRUSHED AGGREGATE A MINIMUM OF 6" ON ALL SIDES. COMPACTED TO 95% OF MAX DENSITY AS DETERMINED BY AASHTO T180.
2. ON TEMPORARY BLOW-OFFS ONLY, AN MJ CAP TAPPED 4" OR 6" MAY BE SUBSTITUTED FOR REDUCER.
3. TEMPORARY BLOW-OFF IS ONE REMOVED AT THE END OF PROJECT CONSTRUCTION. A PERMANENT BLOW-OFF REMAINS ON THE PROJECT AFTER ACCEPTANCE.
4. PLACE BLOW-OFF STANDPIPE 3 FT. INSIDE R.O.W. LINE AT END OF STREET (2 FT FROM BARRICADE).

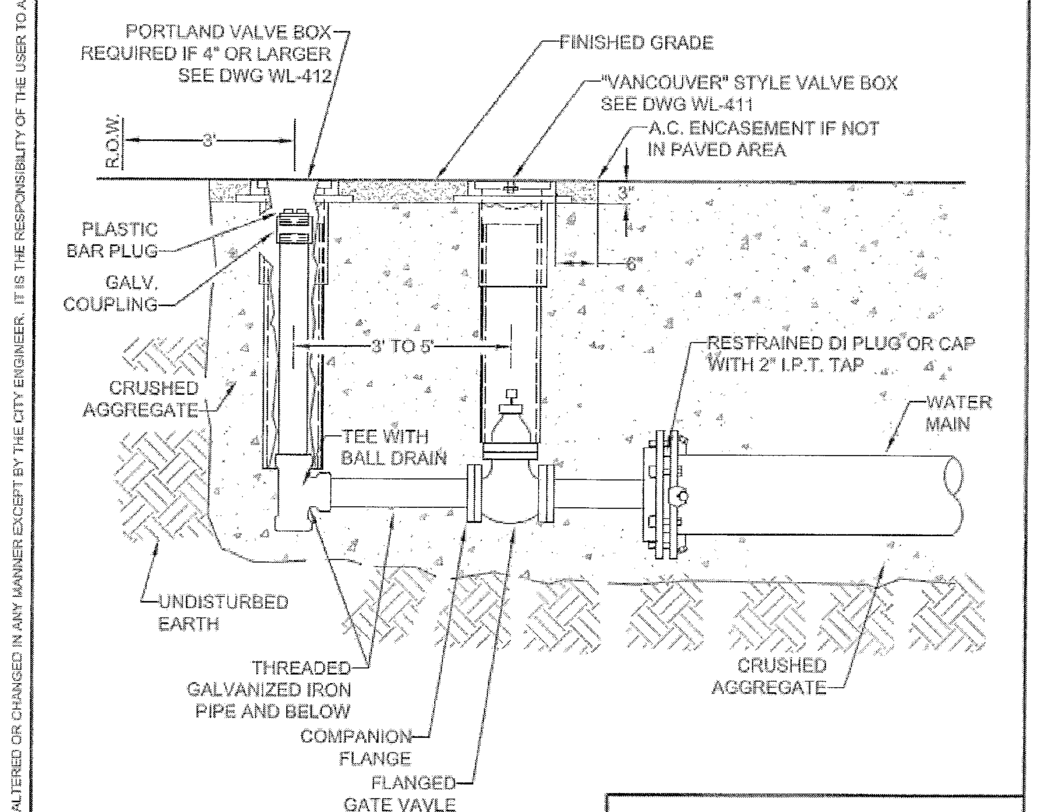

PERMANENT OR TEMPORARY 4" AND 6" BLOW-OFF

City of West Linn — DATE: 2010 — DRAWING NO. WL-404B — FILE NO.

NOTE:

1. INSTALLATION LOCATED AT HIGH POINT OF MAIN.
2. 48" MANHOLE BARREL SECTIONS SHALL BE USED TO INCREASE DEPTH IF NECESSARY.
3. ALL PIPE AND STRUCTURE ZONES SHALL BE COMPACTED TO 95% OF MAX. DENSITY AS DETERMINED BY AASHTO T-180 OR AS SPECIFIED IN THE CONTRACT DOCUMENTS.
4. STD. DETAIL IS NOT FOR SHALLOWER THAN TYPICAL INSTALLATIONS, CONTACT CITY WATER DEPT. FOR OPTIONS.

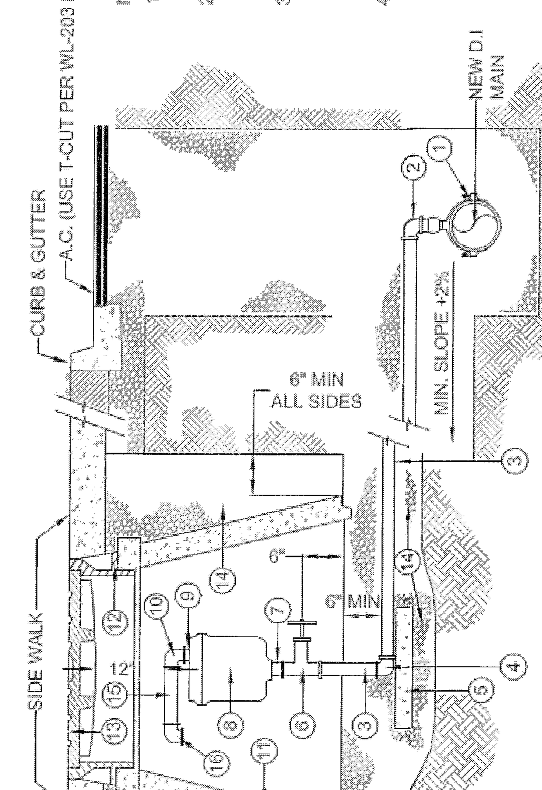

MATERIAL:

1. ROCKWELL NO. 317 SERVICE SADDLE WITH STAINLESS STRAPS
2. MUELLER NO. H15045 2" CORPORATION STOP WITH 1/4 BEND ADAPT (I.P.T. MUELLER 110 CTS)
3. 2" X VARIABLE LENGTH BRASS I.P.T. NIPPLE
4. 2" BRASS 90 DEGREE ELL (MUELLER 110 CTS)
5. 12" X 12" X 4" CONCRETE BLOCK
6. NIBCO NO. 113 2" BRASS GATE VALVE
7. 2" X 3" BRASS I.P.T. NIPPLE
8. 2" AIR RELEASE VALVE (VAL-MATIC #38 OR APCO #200) FOR TYPICAL INSTALLATIONS. IN SOME INSTANCES THE CITY MAY REQUIRE COMBINATION AIR RELEASE & VACUUM UNIT. INSTALL WALL BRACKETS TO SUPPORT VALVE AS NECESSARY
9. 1/2" X 1 1/2" OR 2" X 1 1/2" BRASS I.P.T. NIPPLE
10. 1/2" OR 2" BRASS 90 DEGREE ELL (F.M. I.P.T. X F.M. I.P.T.)
11. STD. 48" CONCRETE MANHOLE CONE
12. FRAME PER STD. DWG. WL-214.
13. TAMPERPROOF MANHOLE COVER PER STD. DWG. WL-214.
14. 3/4" MINUS CRUSHED AGG.
15. 1/2" X 6" OR 2" X 6" BRASS NIPPLE, I.P.T.
16. 1/2" OR 2" BRASS 90 DEGREE ELL WITH SCREEN ON OUTLET
17. 3 EA. 12" CONCRETE PIER BLOCKS

STANDARD AIR RELEASE VALVE UNIT

City of West Linn — DATE: 2010 — DRAWING NO. WL-405 — FILE NO.

FITTING SIZE (Inches)	TEE, WYE, & ① HYDRANTS	STRADDLE BLOCK ②	90° BEND ③ PLUGGED CROSS TEE PLUGGED-RUNS	45° BEND ④	22 1/2° BEND ④	11 1/2° BEND ④
2	*	*	*	*	*	*
4	1.7	2.1	2.4	1.3	*	*
6	3.7	4.9	5.3	2.9	1.5	*
8	6.7	8.7	9.5	5.1	2.7	1.3
10	10.5	13.6	14.8	8	4.1	2
12	15.1	19.6	21.3	11.6	5.9	2.9
14						
16	26.8	34.8	37.9	20.5	10.4	5.2
18	33.9	44	47.9	25.9	12.8	6.7
LARGER	* *	* *	* *	* *	* *	* *

BEARING AREA OF THRUST BLOCKS (sq. ft.)

1. ALL VALUES ARE BASED ON THE FOLLOWING ASSUMPTIONS: AVG. PRESSURE = 100 PSI X 2 (safety factor); 1500 PSF SOIL BEARING CAPACITY; NORMAL DISTRIBUTION DESIGN VELOCITY NOT TO EXCEED 5 F/S.
2. ALL FITTINGS SHALL BE WRAPPED IN 8 MM PLASTIC PRIOR TO PLACEMENT OF CONCRETE.
3. BEARING SURFACE OF THRUST BLOCKING SHALL BE AGAINST UNDISTURBED SOIL.
4. ALL CONCRETE MIX SHALL HAVE A MIN. 28 DAY STRENGTH OF 3000 PSI.
5. ALL PIPE ZONES SHALL BE GRAVEL FILLED AND COMPACTED.
6. THRUST BLOCKS FOR PLUGGED CROSS AND PLUGGED TEE SHALL HAVE #4 REBAR LIFTING LOOPS INSTALLED AS SHOWN.
7. VERTICAL THRUST DETAILS-SEE DWG. WL-407.
8. STRADDLE BLOCK DETAILS-SEE DWG. WL-408.

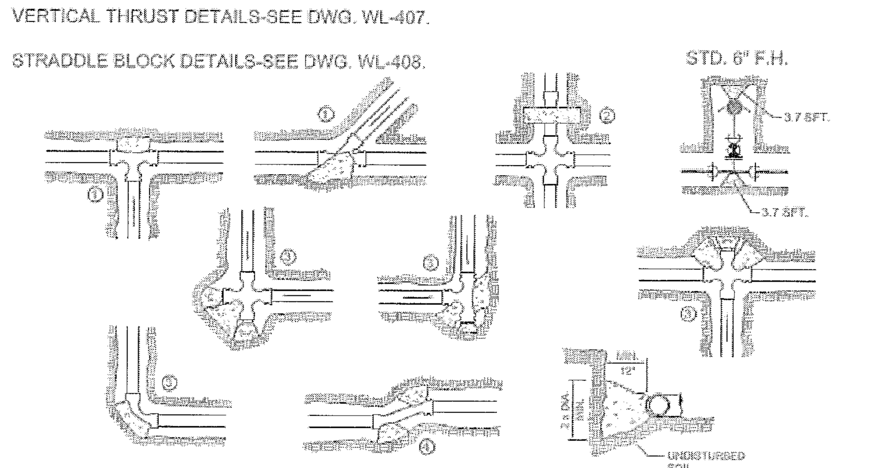

* BLOCK TO UNDISTURBED TRENCH WALLS.

** THRUST BLOCKS FOR PIPES LARGER THAN 18" WILL BE INDIVIDUALLY DESIGNED BY THE ENGINEER.

HORIZONTAL THRUST BLOCKING

City of West Linn — DATE: 2010 — DRAWING NO. WL-406 — FILE NO.

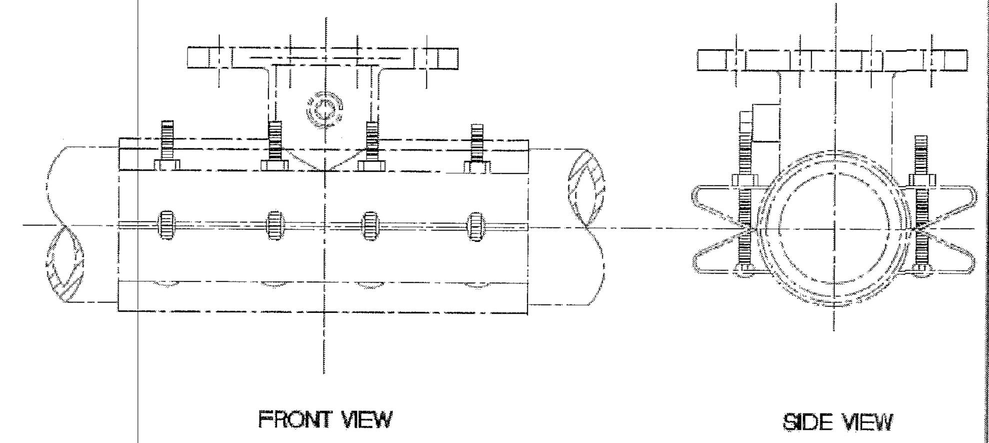

NOTE:

1. WATER MAIN SHALL BE CLEANED BEFORE ATTACHING SLEEVE.
2. SLEEVE AND VALVE SHALL BE PRESSURE TESTED BEFORE MAKING TAP.
3. PRESSURE TEST AND TAP SHALL BE MADE IN THE PRESENCE OF AN AUTHORIZED CITY REPRESENTATIVE.
4. PROPER TAPPING MACHINE SHALL BE USED TO MAKE TAP.
5. THRUST BLOCKING REQUIREMENTS SHALL BE DETERMINED BY THE ENGINEER OR PER DWG. WL-406.
6. TAP SHALL BE MADE NO CLOSER THAN 18 INCHES FROM THE NEAREST JOINT OR TAP.
7. SLEEVE AND VALVE SHALL BE WRAPPED WITH 8 MIL PLASTIC.
8. SLEEVES TO BE USED ARE JCM OR MUELLER STAINLESS STEEL TAPPING SLEEVES. ALL NUTS AND BOLTS SHALL BE STAINLESS STEEL.
9. SLEEVE SHALL BE AS LEVEL AS POSSIBLE.
10. ALL BOLTS SHALL HAVE NEVER SIEZE ON THREADS.

STANDARD WET TAP

City of West Linn — DATE: 2010 — DRAWING NO. WL-410 — FILE NO.

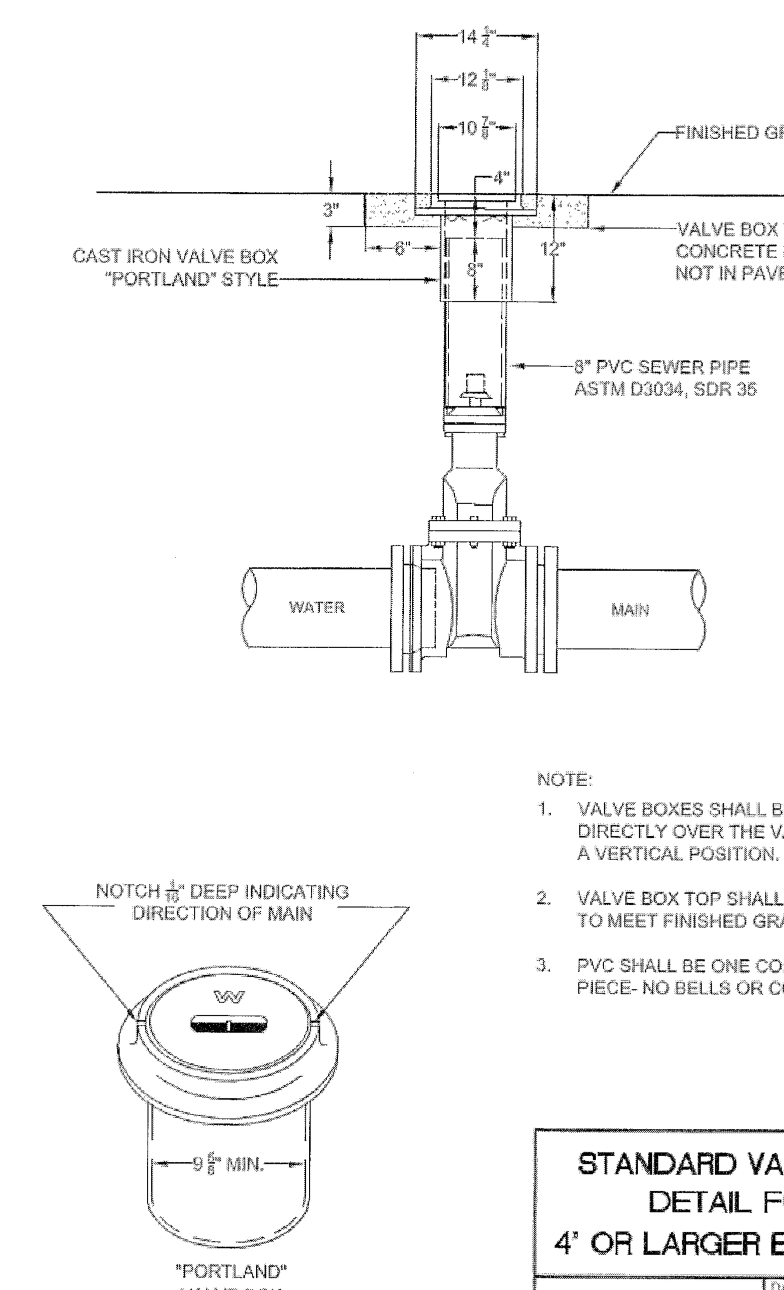

NOTE:

1. VALVE BOXES SHALL BE CENTERED DIRECTLY OVER THE VALVE NUT IN A VERTICAL POSITION.
2. VALVE BOX TOP SHALL BE ADJUSTED TO MEET FINISHED GRADE.
3. PVC SHALL BE ONE CONTINUOUS PIECE- NO BELLS OR COUPLERS.

STANDARD VALVE BOX DETAIL FOR 4" OR LARGER BLOW-OFF

City of West Linn — DATE: 2010 — DRAWING NO. WL-412 — FILE NO.

THIS DETAIL DRAWING SHALL NOT BE ALTERED OR CHANGED IN ANY MANNER EXCEPT BY THE CITY ENGINEER. IT IS THE RESPONSIBILITY OF THE USER TO ACQUIRE THE MOST CURRENT VERSION OF THE DETAIL.

2015-129M

STANDARD DETAILS

DESIGNED:	BDG			
DRAWN:	BJS			
SCALE:	NTS			
DATE:	March, 2016			
FILE:	Rosemont Details	DATE	NO.	REVISION

Theta, llc
ENGINEERING - SURVEYING - PLANNING
PO Box 1345 Lake Oswego, Oregon 97035
503/481-8822 email: thetaeng@comcast.net

Icon Construction & Development, LLC
1980 Willamette Falls Drive, Suite 200
West Linn, OR 97068
PH: (503) 657-0406

Tanner Ridge at Rosemont
1270 Rosemont Road
West Linn, Oregon

SHEET: D-2

THIS DETAIL DRAWING SHALL NOT BE ALTERED OR CHANGED IN ANY MANNER EXCEPT BY THE CITY ENGINEER. IT IS THE RESPONSIBILITY OF THE USER TO ACQUIRE THE MOST CURRENT VERSION OF THE DETAIL.

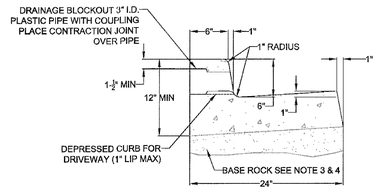

FLUSH, DEPRESSED CURB FOR WHEELCHAIR RAMP 2% MAX SLOPE

TYPICAL CURB AND GUTTER

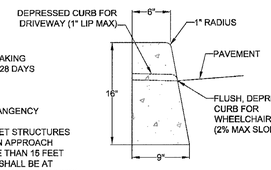

TYPICAL STRAIGHT CURB

NOTE:

1. CONCRETE SHALL HAVE A BREAKING STRENGTH OF 3300 PSI AFTER 28 DAYS
2. CONTRACTION JOINTS:
   A) TO BE PROVIDED:
      -AT EACH POINT OF TANGENCY
      -AT EACH COLD JOINT
      -AT EACH SIDE OF INLET STRUCTURES
      -AT BOTH SIDES OF AN APPROACH
   B) SPACING TO BE NOT MORE THAN 15 FEET
   C) THE DEPTH OF THE JOINT SHALL BE AT LEAST 1/3 OF THE THICKNESS OF CONCRETE
   D) EXPANSION JOINTS SHALL NOT BE USED
3. BASE ROCK - 1-1/2"-0", 95% COMPACTION PER AASHTO T-180 ROCK SHALL BE TO SUBGRADE OF THE STREET SECTION OR 4" IN DEPTH, WHICHEVER IS GREATER
4. FULL DEPTH PREPARED ROCK SECTION SHALL EXTEND 1' HORIZONTALLY BEYOND BOTH SIDES OF CURB AND GUTTER
5. DRAINAGE BLOCK - 3" DIA. PLASTIC PIPE
   A) DRAINAGE ACCESS THROUGH EXISTING CURBS SHALL BE DONE BY:
      -CORE DRILLING
      -VERTICAL SAWCUT OF CURB 24" EACH SIDE OF DRAIN AND RE-POURED TO FULL DEPTH OF CURB
6. STAMP TOP OF CURB WITH "W" AT WATER SERVICE CROSSING AND "S" AT SANITARY LATERAL CROSSING

TYPICAL CURBS

City of West Linn | DATE: 2010 | DRAWING NO. WL-501 | FILE NO.

THIS DETAIL DRAWING SHALL NOT BE ALTERED OR CHANGED IN ANY MANNER EXCEPT BY THE CITY ENGINEER. IT IS THE RESPONSIBILITY OF THE USER TO ACQUIRE THE MOST CURRENT VERSION OF THE DETAIL.

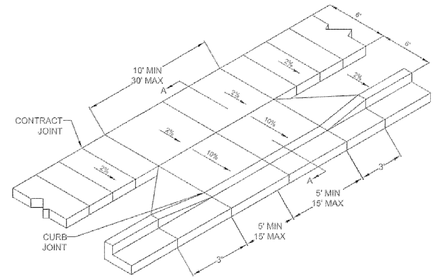

SIDEWALK AWAY FROM CURB

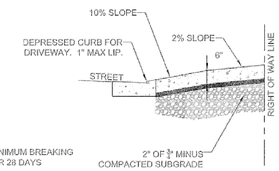

SECTION A-A

NOTE:

1. CONCRETE SHALL HAVE A MINIMUM BREAKING STRENGTH OF 3300 PSI AFTER 28 DAYS 6 SACK MIX
2. CURB SHALL BE TROWELED JOINT WITH MIN. 1/2" RADIUS ALONG BACK OF CURB
3. DRIVEWAY SHALL BE A MINIMUM 6" THICK
4. DRIVEWAY CURB CUT SHALL COMPLY WITH THE CONDITIONS OF 5.0070, "WIDTH AND LOCATION OF CURB CUTS"
5. FOR REPLACEMENT OF EXISITNG APPROACH:
   A. MUST MEET CURRENT ADA REQUIREMENTS TO GREATEST DEGREE POSSIBLE.
   B. DAMAGED ROADWAY MUST BE SAWCUT AND REPAVED WITH CLASS C HOT MIX ASPHALT

RESIDENTIAL DRIVEWAY WITH SIDEWALK AWAY FROM CURB

City of West Linn | DATE: 2010 | DRAWING NO. WL-503A | FILE NO.

THIS DETAIL DRAWING SHALL NOT BE ALTERED OR CHANGED IN ANY MANNER EXCEPT BY THE CITY ENGINEER. IT IS THE RESPONSIBILITY OF THE USER TO ACQUIRE THE MOST CURRENT VERSION OF THE DETAIL.

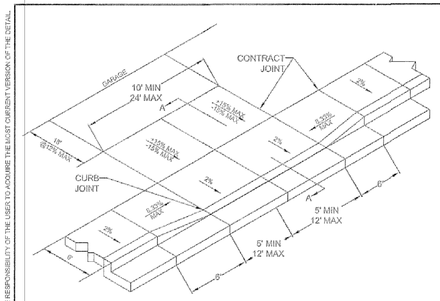

SIDEWALK ADJACENT TO CURB

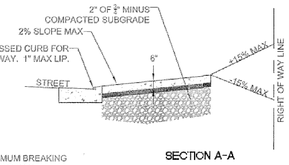

SECTION A-A

NOTE:

1. CONCRETE SHALL HAVE A MINIMUM BREAKING STRENGTH OF 3300 PSI AFTER 28 DAYS 6 SACK MIX
2. CURB SHALL BE TROWELED JOINT WITH MIN. 1/2" RADIUS ALONG BACK OF CURB
3. DRIVEWAY SHALL BE A MINIMUM 6" THICK
4. DRIVEWAY CURB CUT SHALL COMPLY WITH THE CONDITIONS OF 5.0070, "WIDTH AND LOCATION OF CURB CUTS"
5. FOR REPLACEMENT OF EXISITNG APPROACH:
   A. MUST MEET CURRENT ADA REQUIREMENTS TO GREATEST DEGREE POSSIBLE
   B. DAMAGED ROADWAY MUST BE SAWCUT AND REPAVED WITH CLASS C HOT MIX ASPHALT

RESIDENTIAL DRIVEWAY WITH SIDEWALK ADJACENT TO CURB

City of West Linn | DATE: 2010 | DRAWING NO. WL-503B | FILE NO.

THIS DETAIL DRAWING SHALL NOT BE ALTERED OR CHANGED IN ANY MANNER EXCEPT BY THE CITY ENGINEER. IT IS THE RESPONSIBILITY OF THE USER TO ACQUIRE THE MOST CURRENT VERSION OF THE DETAIL.

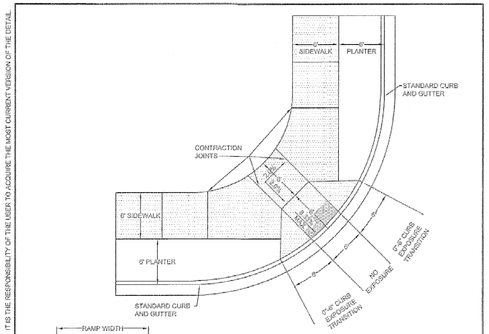

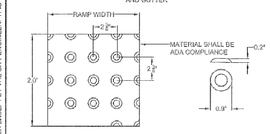

RAMP TEXTURE PATTERN DETAIL

TRUNCATED DOME DETAIL

NOTE:

1. LANDING AT TOP OF RAMP SHALL NOT EXCEED 2% IN ANY DIRECTION AND SHALL BE A MINIMUM OF 60" x 60".
2. RAMP CROSS SLOPE SHALL NOT EXCEED 2% (AS MEASURED PERPENDICULAR TO PEDESTRIAN TRAFFIC FLOW).
3. TRUNCATED DOME MUST EXTEND THE FULL WIDTH OF THE RAMP AND COVER THE FIRST 2 FEET OF THE RAMP CLOSEST TO THE STREET.
4. TRANSITIONS FROM THE RAMP TO THE WALKWAY, GUTTER, AND STREET MUST BE FLUSH (LEVEL) AND FREE OF ABRUPT LEVEL CHANGES.
5. THE GUTTER OR ADJACENT ROADWAY MUST HAVE A SLOPE OF NO MORE THAN 5 PERCENT (1:20) TOWARD THE RAMP.
6. FLARED SIDES ("WING") OF THE CURB RAMP SHALL NOT EXCEED 10% IN SLOPE (8.33% IF PEDESTRIAN TRAVEL IS REQUIRED OVER THEM PER ADA STANDARDS - I.E. IF MINIMUM 48" x 48" (FOR EXISTING SITES ONLY) LANDING IS NOT PROVIDED AT TOP OF RAMP).
7. CONCRETE STRENGTH SHALL BE 3300 PSI.
8. PLACE CONTRACTION JOINTS AS SHOWN ABOVE.
9. NO ABOVE GROUND UTILITIES ARE PERMITTED WITHIN RAMP AREA.
10. WHEN EITHER OPPOSING CURB RAMP HAS AN EXISTING TWIN RAMP, USE DETAIL WL-507B.

SINGLE CURB RAMP (ALLOWED WITH CITY ENGINEER APPROVAL ONLY)

City of West Linn | DATE: 2010 | DRAWING NO. WL-507A | FILE NO.

THIS DETAIL DRAWING SHALL NOT BE ALTERED OR CHANGED IN ANY MANNER EXCEPT BY THE CITY ENGINEER. IT IS THE RESPONSIBILITY OF THE USER TO ACQUIRE THE MOST CURRENT VERSION OF THE DETAIL.

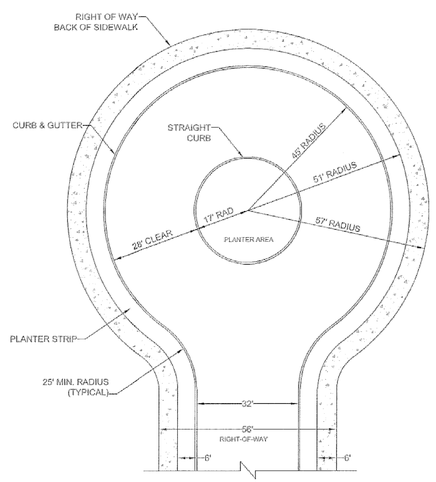

STANDARD CUL-DE-SAC

City of West Linn | DATE: 2010 | DRAWING NO. WL-512 | FILE NO.

THIS DETAIL DRAWING SHALL NOT BE ALTERED OR CHANGED IN ANY MANNER EXCEPT BY THE CITY ENGINEER. IT IS THE RESPONSIBILITY OF THE USER TO ACQUIRE THE MOST CURRENT VERSION OF THE DETAIL.

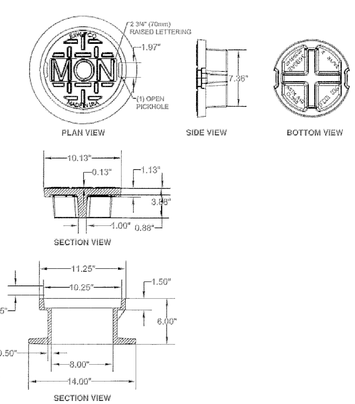

STANDARD 8" MONUMENT WELL
USED BY CLACKAMAS COUNTY SURVEY DEPARTMENT
WHERE SPEEDS ARE ABOVE 35 MPH

EAST JORDAN IRON WORKS, INC.
P.O. BOX 439
EAST JORDAN, MI. 49727
1-800-874-4100
FAX: 231-536-4458

Anders Jorgenson
Oregon Sales Representative
East Jordan Iron Works
(503) 774-4144
Fax (503) 775-3283
Cell (503) 367-7225
ajorgenson@ejiw.com

8" MONUMENT BOX FRAME AND COVER

City of West Linn | DATE: 2010 | DRAWING NO. WL-513A | FILE NO.

THIS DETAIL DRAWING SHALL NOT BE ALTERED OR CHANGED IN ANY MANNER EXCEPT BY THE CITY ENGINEER. IT IS THE RESPONSIBILITY OF THE USER TO ACQUIRE THE MOST CURRENT VERSION OF THE DETAIL.

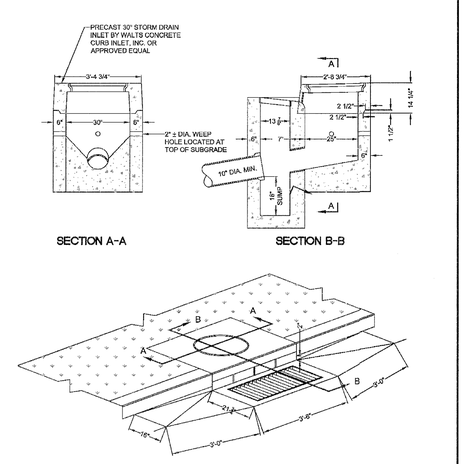

NOTE:

1. CAST IN PLACE CONCRETE TO BE 3300 PSI AND WEEP HOLE WITH GALVINIZED MESH. SCREEN ON MIN. 3 SIDES OF INLET.
2. MANHOLE RIMS AND COVERS AS MANUFACTURED BY HERN IRON WORKS, COEUR D' ALENE, IDAHO. COVER PATTERN NO. 2312, RIM PATTERN NO. 2311 OR APPROVED EQUAL.

COMBINATION CURB INLET

City of West Linn | DATE: 2010 | DRAWING NO. WL-601 | FILE NO.

THIS DETAIL DRAWING SHALL NOT BE ALTERED OR CHANGED IN ANY MANNER EXCEPT BY THE CITY ENGINEER. IT IS THE RESPONSIBILITY OF THE USER TO ACQUIRE THE MOST CURRENT VERSION OF THE DETAIL.

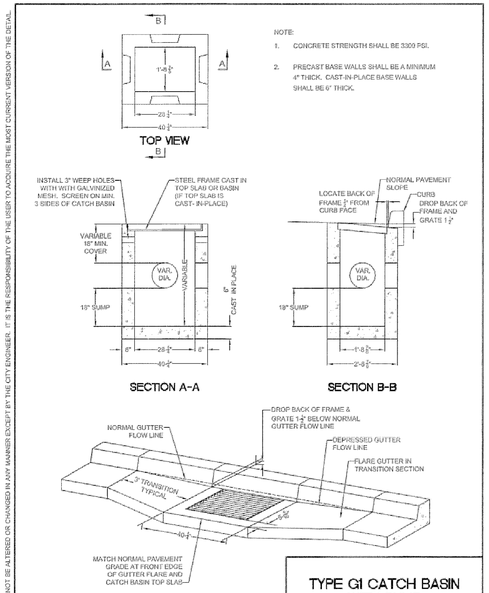

NOTE:

1. CONCRETE STRENGTH SHALL BE 3300 PSI.
2. PRECAST BASE WALLS SHALL BE A MINIMUM 4" THICK. CAST-IN-PLACE BASE WALLS SHALL BE 6" THICK.

NOTE:

PRECAST TOP SLAB SHOWN WITH GUTTER TRANSITION FLARE IF THE TOP SLAB IS CAST-IN-PLACE, NO FLARE IS REQUIRED IN THE TRANSITION SECTION. MATCH THE TOP FRONT EDGE OF THE FRAME AND THE TOP FRONT EDGE OF THE CAST-IN-PLACE TOP SLAB TO THE NORMAL PAVEMENT GRADE.

TYPE G1 CATCH BASIN WITH SUMP

City of West Linn | DATE: 2010 | DRAWING NO. WL-602A | FILE NO.

STANDARD DETAILS

2015-129M

DESIGNED:	BDG			
DRAWN:	BJS			
SCALE:	NTS			
DATE:	March, 2016			
FILE:	Rosemont Details	DATE	NO.	REVISION

Theta, llc
ENGINEERING - SURVEYING - PLANNING
PO Box 1345
Lake Oswego, Oregon 97035
503/481-8822
email: thetaeng@comcast.net

Icon Construction & Development, LLC
1980 Willamette Falls Drive, Suite 200
West Linn, OR 97068
PH: (503) 657-0406

Tanner Ridge at Rosemont
1270 Rosemont Road
West Linn, Oregon

SHEET: D-3

F:\Acad\Rosemont\Rosemont Details.dwg, 4/24/2017 9:29:33 AM

THIS DETAIL DRAWING SHALL NOT BE ALTERED OR CHANGED IN ANY MANNER EXCEPT BY THE CITY ENGINEER. IT IS THE RESPONSIBILITY OF THE USER TO ASSURE THE MOST CURRENT VERSION OF THE DETAIL.

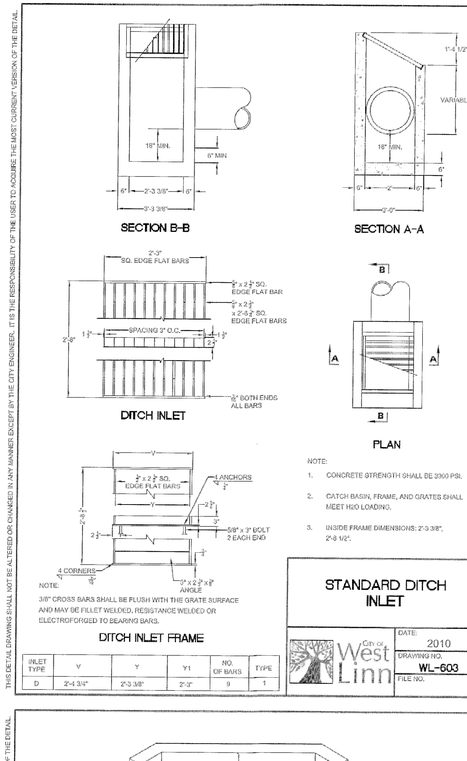

NOTE:

1. CONCRETE STRENGTH SHALL BE 3000 PSI.
2. CATCH BASIN, FRAME, AND GRATES SHALL MEET H20 LOADING.
3. INSIDE FRAME DIMENSIONS: 2'-3 3/8", 2'-9 1/2".

NOTE:

3/8" CROSS BARS SHALL BE FLUSH WITH THE GRATE SURFACE AND MAY BE FILLET WELDED, RESISTANCE WELDED OR ELECTROFORGED TO BEARING BARS.

INLET TYPE	V	Y	Y1	NO. OF BARS	TYPE
D	2'-4 3/4"	2'-3 3/8"	2'-3"	9	1

STANDARD DITCH INLET

City of West Linn | DATE: 2010 | DRAWING NO. WL-603 | FILE NO.

THIS DETAIL DRAWING SHALL NOT BE ALTERED OR CHANGED IN ANY MANNER EXCEPT BY THE CITY ENGINEER. IT IS THE RESPONSIBILITY OF THE USER TO ASSURE THE MOST CURRENT VERSION OF THE DETAIL.

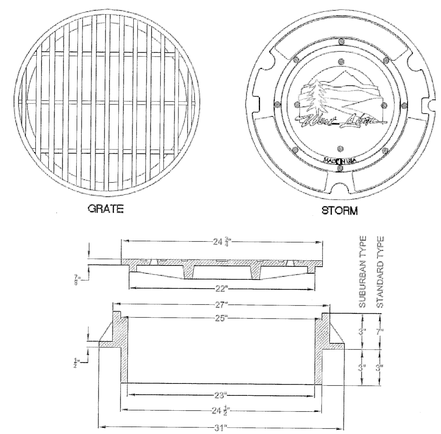

NOTE:

1. USE SUBURBAN TYPE ONLY IN NON-TRAFFIC AREAS, AND ONLY WITH APPROVAL BY THE CITY.
2. COVER AND FRAME SHALL BE GRAY CAST IRON ASTM A-48 CLASS 30.
3. COVER AND FRAME TO BE MACHINED TO A TRUE BEARING ALL AROUND.
4. NOTCH LID FOR LIFTING HOOK.
5. OPEN GRATES REQUIRE APPROVAL BY CITY, AND MUST BE BICYCLE SAFE IF USED IN TRAFFIC AREAS.

MANHOLE FRAME AND COVER

City of West Linn | DATE: 2010 | DRAWING NO. WL-605 | FILE NO.

THIS DETAIL DRAWING SHALL NOT BE ALTERED OR CHANGED IN ANY MANNER EXCEPT BY THE CITY ENGINEER. IT IS THE RESPONSIBILITY OF THE USER TO ASSURE THE MOST CURRENT VERSION OF THE DETAIL.

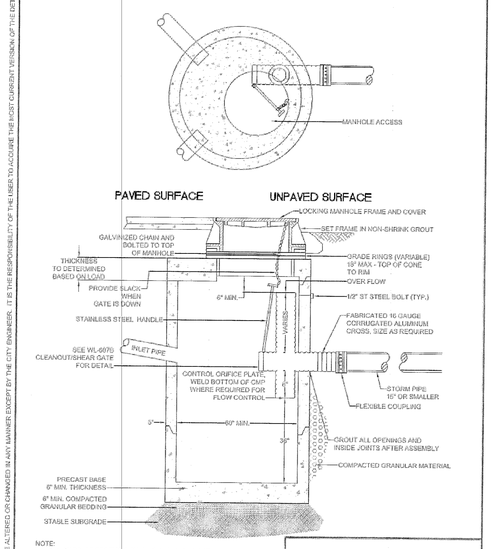

NOTE:

1. ALL PRECAST SECTIONS SHALL CONFORM TO THE REQUIREMENTS OF ASTM C-478.
2. DISTANCE FROM TOP OF OVERFLOW TO MH RIM SHALL BE BASED ON OVERFLOW CAPACITY CALCS BY DESIGN ENGINEER. ASSUME ORIFICE CONTROL.
3. 72" MINIMUM DIA. MANHOLE REQUIRED FOR OUTLET OR INLET > 21".
4. NO STEPS REQUIRED.

POLLUTION/FLOW CONTROL MANHOLE

City of West Linn | DATE: 2010 | DRAWING NO. WL-607A | FILE NO.

THIS DETAIL DRAWING SHALL NOT BE ALTERED OR CHANGED IN ANY MANNER EXCEPT BY THE CITY ENGINEER. IT IS THE RESPONSIBILITY OF THE USER TO ASSURE THE MOST CURRENT VERSION OF THE DETAIL.

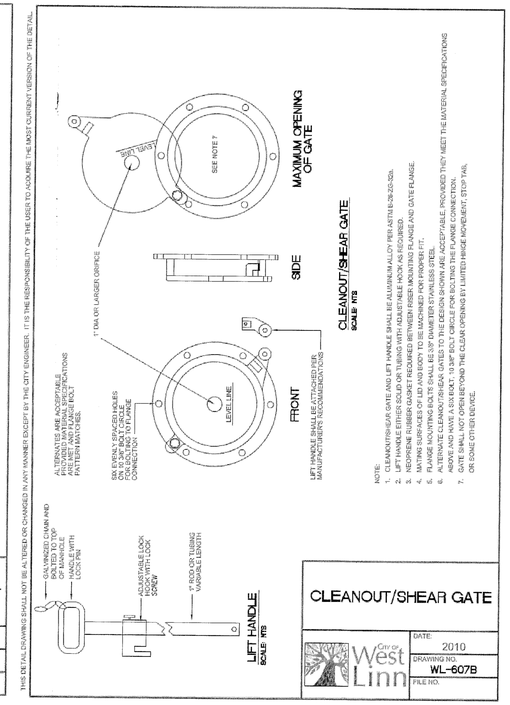

NOTE:

1. CLEANOUT/SHEAR GATE AND LIFT HANDLE SHALL BE ALUMINUM ALLOY PER ASTM B-26-20-32a.
2. LIFT HANDLE EITHER SOLID OR TUBING WITH ADJUSTABLE HOOK AS REQUIRED.
3. NEOPRENE RUBBER GASKET REQUIRED BETWEEN RISER MOUNTING FLANGE AND GATE FLANGE.
4. MANUFACTURER'S NAME SHALL BE CAST INTO THE GATE.
5. FLANGE MOUNTING BOLTS SHALL BE 1/2" STAINLESS STEEL.
6. ALTERNATE CLEANOUT/SHEAR GATES TO THE DESIGN SHOWN ARE ACCEPTABLE, PROVIDED THEY MEET THE MATERIAL SPECIFICATIONS ABOVE AND HAVE A SIX BOLT, 10 3/8" BOLT CIRCLE FOR BOLTING THE FLANGE CONNECTION.
7. SIZE OF GATE SHALL BE DETERMINED BY THE CLEAR OPENING BY LIMITED RIDGE MOVEMENT, STOP TAB, OR SOME OTHER DEVICE.

CLEANOUT/SHEAR GATE

City of West Linn | DATE: 2010 | DRAWING NO. WL-607B | FILE NO.

THIS DETAIL DRAWING SHALL NOT BE ALTERED OR CHANGED IN ANY MANNER EXCEPT BY THE CITY ENGINEER. IT IS THE RESPONSIBILITY OF THE USER TO ASSURE THE MOST CURRENT VERSION OF THE DETAIL.

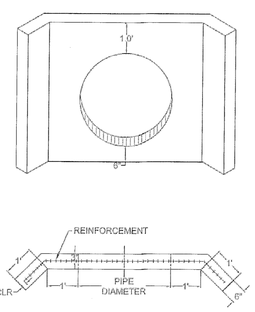

NOTE:

1. USE CONCRETE HAVING A 28 DAY DESIGN STRENGTH OF 3300 PSI.
2. OUTLET WING WALL SHALL BE USED FOR ALL OUTFALL PIPES FROM 10" TO 36".
3. THIS DETAIL REPRESENTS THE MINIMUM REQUIREMENT. THE NEED FOR ADDITIONAL STEEL, A FOOTING AND DRAINAGE BEHIND THE WALL SHALL BE INVESTIGATED BY THE DESIGN ENGINEER.
4. FOR PIPES LARGER THAN 33" OR MULTIPLE PIPE OUTLETS, USE DETAIL WL-612.
5. CONCRETE REINFORCEMENT SHALL CONSIST OF:

   A) ADDING A POLY-FIBER MESH TO THE CONCRETE MIX OR
   B) USE (2) #4 BARS ABOVE AND BELOW PIPE AND #4 BARS AT 6" O.C. VERTICALLY.

OUTLET HEADWALL (FOR OUTLET PIPES OF 10" TO 33")

City of West Linn | DATE: 2010 | DRAWING NO. WL-613 | FILE NO.

THIS DETAIL DRAWING SHALL NOT BE ALTERED OR CHANGED IN ANY MANNER EXCEPT BY THE CITY ENGINEER. IT IS THE RESPONSIBILITY OF THE USER TO ASSURE THE MOST CURRENT VERSION OF THE DETAIL.

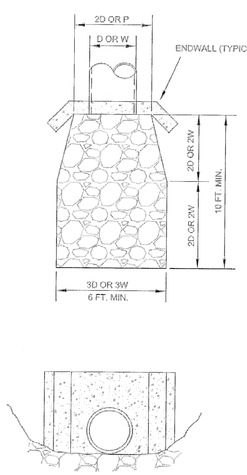

D = PIPE DIAMETER
W = BOTTOM WIDTH OF CHANNEL
P = WETTED PERIMETER OF CHANNEL

DESIGN VELOCITY FT./SEC.	ROCK CLASSIFICATION BY WEIGHT
6 - 10	200 LBS.
10 - 12	1/4 TON
12 - 14	1/2 TON
14 - 16	1 TON
16 - 18	2 TON

SELECTION OF RIP RAP (SEE NOTE 1)

NOTE:

1. DIMENSIONS FOR RIP RAP APPLY TO FLOWS
   < 2 CFS RIP RAP FOR FLOWS
   > 2 CFS MUST BE DESIGNED BY AN ENGINEER
   FLOWS > 30 FPS SHALL USE ENERGY DISSIPATOR
2. TYPE OF RIP RAP
   A. REGULAR QUARRY STONE CLASS 50-200
   B. COBBLESTONE
   C. CONCRETE (ONLY ALLOWED UPON APPROVAL OF THE CITY)
3. PLACEMENT
   A. MINIMUM DEPTH = 1 1/2 TIMES AVERAGE STONE SIZE.
   B. ROCKS SHALL BE PLACED TO PROVIDE A MINIMUM OF VOIDS.
   C. SURFACE ROCKS OR CONCRETE SHALL PROTRUDE AT LEAST 1/2 THEIR VERTICAL DIMENSION.
   D. RIP RAP IS TO BE PLACED OVER A NATURAL BEDDING, OR IT MAY BE GROUTED OR PLACED OVER A GRAVEL BEDDING AS REQUIRED BY THE CITY.

STORM SEWER OUTFALL

City of West Linn | DATE: 2010 | DRAWING NO. WL-614 | FILE NO.

THIS DETAIL DRAWING SHALL NOT BE ALTERED OR CHANGED IN ANY MANNER EXCEPT BY THE CITY ENGINEER. IT IS THE RESPONSIBILITY OF THE USER TO ASSURE THE MOST CURRENT VERSION OF THE DETAIL.

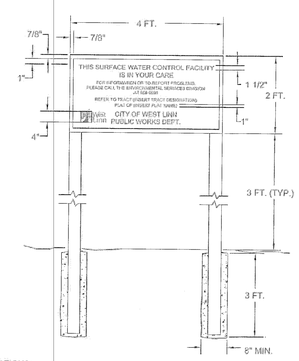

SPECIFICATIONS:

SIZE:	48" x 24"
MATERIAL:	ALUMINUM (.080" THICKNESS)
PAINT:	FACE - 3 COATS OUTDOOR ENAMEL (SPRAYED) BACK - 1 COAT OUTDOOR ENAMEL (SPRAYED)
LETTERING:	SILK SCREEN ENAMEL WHERE POSSIBLE, OR HAND PAINTED ENAMELS
COLOR:	BLACK AND WHITE. WHITE BACKGROUND, LETTERING AND BORDER IN BLACK
TYPE FACE:	HELVETICA. SEE DIMENSIONS SHOWN ABOVE. OUTER BORDER 1/2" WIDTH BLACK
INSTALLATION:	INSTALL ON TWO 8 FT. LONG 4" x 4" POSTS, PRESSURE TREATED, INSTALLED IN 3 FT. DEEP CONCRETE FILLED POST HOLES (8" MIN. DIA.)

SURFACE WATER FACILITY SIGN

City of West Linn | DATE: 2010 | DRAWING NO. WL-615 | FILE NO.

2015-129M

STANDARD DETAILS

DESIGNED:	BDG			
DRAWN:	BJS			
SCALE:	NTS			
DATE:	March, 2016			
FILE:	Rosemont Details	DATE	NO.	REVISION

Theta, llc
ENGINEERING - SURVEYING - PLANNING
PO Box 1345
Lake Oswego, Oregon 97035
503/481-8822
email: thetaeng@comcast.net

Icon Construction & Development, LLC
1980 Willamette Falls Drive, Suite 200
West Linn, OR 97068
PH: (503) 657-0406

Tanner Ridge at Rosemont
1270 Rosemont Road
West Linn, Oregon

SHEET: D-4