BLAND CIRCLE INTERTIE PUMP STATION
PROJECT NUMBER: PW1014
MARCH, 2014

DESIGN ENGINEER:
4B ENGINEERING
EDWARD BUTTS, PE
ADAM BUTTS, E.I.
BROOKE SALTARELLO
3700 RIVER ROAD N
SUITE 2
KEIZER, OREGON 97303

OWNER:
CITY OF WEST LINN
ERICH LAIS, P.E.
ASSISTANT CITY ENGINEER
22500 SALAMO ROAD
WEST LINN, OREGON 97068

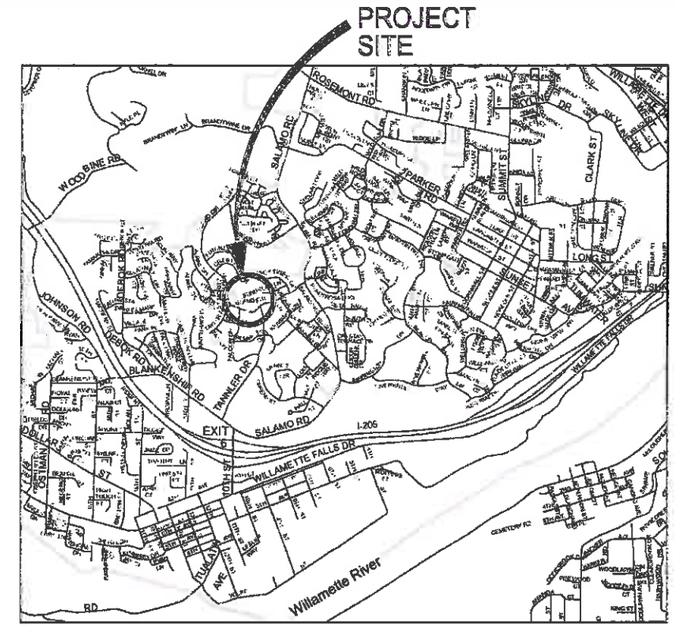

WEST LINN, OREGON
VICINITY MAP
NOT TO SCALE

SHEET INDEX

SHEET C-1: COVER SHEET AND DRAWING INDEX
SHEET S-1A: SITE PLAN (1" = 40'-0" SCALE)
SHEET S-1B: SITE PLAN (1" = 20'-0" SCALE)
SHEET S-2: SITE DETAILS
SHEET B-1: PUMP STATION ELEVATIONS
SHEET B-2: PUMP STATION ROOF PLAN AND DETAILS
SHEET B-3: PUMP STATION RIDGE AND SKYLIGHT DETAILS
SHEET M-1: MECHANICAL PLAN VIEW
SHEET M-2: MECHANICAL ELEVATION VIEW
SHEET M-3: THRUST BLOCK DETAILS
SHEET M-4: MECHANICAL DETAILS
SHEET D-1: DRAIN DETAILS
SHEET E-1: PUMP STATION ELECTRICAL PLAN VIEW
SHEET E-2: PUMP STATION LIGHTING AND HEATING PLAN
SHEET E-3: ELECTRICAL DETAILS
SHEET E-4: ONE LINE POWER DIAGRAM
SHEET E-5: ELECTRICAL DETAILS
SHEET 1C-1: BLOCK DIAGRAM PUMPING SYSTEMS
SHEET 1C-2: BLOCK DIAGRAM ANCILLARY SYSTEMS
SHEET 1C-3: NETWORK DIAGRAM-LOCAL AND WIDE AREA CONNECTIONS
SHEET 1C-4: P&ID PROCESS CONTROLS
SHEET 1C-5: PRESENTATION REMOTE TELEMETRY UNIT
SHEET 1C-6: MOTOR CONTROL CENTER PRESENTATION AND ONE LINE DIAGRAM
SHEET 1C-7: WIRING DIAGRAM MOTOR CONTROL LOGIC

DESIGN CRITERIA

ADDRESS: 23120 SW BLAND CIRCLE WEST LINN, OREGON 97068
TYPE OF FACILITY: POTABLE WATER BOOSTER PUMPING STATION
OCCUPANCY CATEGORY: IV
OCCUPANCY CLASS: F1
CONSTRUCTION TYPE: V-B (ACCEPTABLE FOR SINGLE STORY STRUCTURES UP TO 5,500 FT^2)
BUILDING AREA: 352 SQUARE FEET (16' X 22')
< 5,500 FT^2 ALLOWED
NUMBER OF STORIES: 1
DESIGN CATEGORY: CATEGORY IV (ESSENTIAL FACILITIES)
WALL CONSTRUCTION FRAMING: 8" X 8" X 16" HOLLOW CORE MEDIUM WEIGHT CONCRETE MASONRY UNITS; COLOR: DARK GREEN
ROOF CONSTRUCTION: PREFABRICATED TRUSSES @ 24" O.C. SPACING WITH 3/4" EXTERIOR GRADE PLYWOOD SHEATHING, AND STANDING SEAM METAL ROOF.
FLOOR CONSTRUCTION: 6" CAST-IN-PLACE CONCRETE
SEISMIC SITE CLASS: CLASS "D"
NEAREST SETBACK TO PROPERTY LINE: 20' FROM SOUTH PROPERTY LINE

REGISTERED PROFESSIONAL ENGINEER
13,250
OREGON
JULY 17, 1986
EDWARD P. BUTTS
EXPIRES: 12-31-15

4B ENGINEERING & CONSULTING, LLC
3700 RIVER ROAD N, SUITE 2
KEIZER, OREGON 97303
(503) 589-1115

CITY OF WEST LINN
BLAND CIRCLE INTERTIE P.S.
COVER SHEET

PREPARED FOR:
CITY OF WEST LINN
22500 SALAMO ROAD
WEST LINN, OREGON 97068
(503) 657-0331

DESIGN: EDWARD P. BUTTS, P.E. ADAM P. BUTTS, E.I.
DRAWN: BROOKE SALTARELLO
DATE: AUGUST 19, 2013
DRAWING:
SCALE: AS SHOWN

REVISIONS:

No.	Date	By
1	JAN 27, 2014	BS

SHEET: C-1

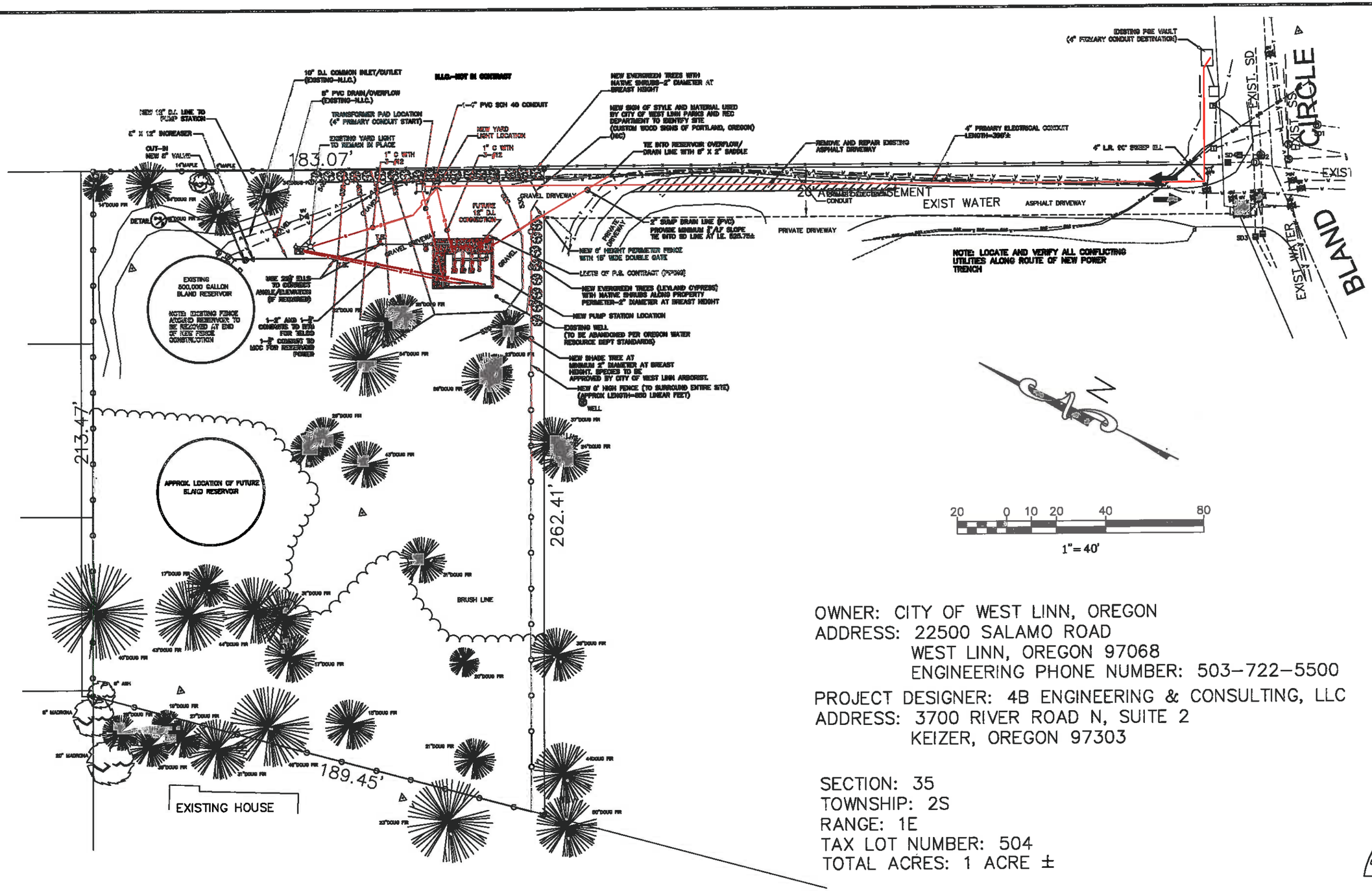

OWNER: CITY OF WEST LINN, OREGON
ADDRESS: 22500 SALAMO ROAD
WEST LINN, OREGON 97068
ENGINEERING PHONE NUMBER: 503-722-5500

PROJECT DESIGNER: 4B ENGINEERING & CONSULTING, LLC
ADDRESS: 3700 RIVER ROAD N, SUITE 2
KEIZER, OREGON 97303

SECTION: 35
TOWNSHIP: 2S
RANGE: 1E
TAX LOT NUMBER: 504
TOTAL ACRES: 1 ACRE ±

REGISTERED PROFESSIONAL ENGINEER
13,250
OREGON
JULY 17, 1986
EDWARD P. BUTTS

EXPIRES: 12-31-15

4B ENGINEERING & CONSULTING, LLC
3700 RIVER ROAD N, SUITE 2
KEIZER, OREGON 97303
(503) 589-1115

CITY OF WEST LINN
BLAND CIRCLE INTERTIE P.S.
SITE PLAN

PREPARED FOR:
CITY OF WEST LINN
22500 SALAMO ROAD
WEST LINN, OREGON 97068
(503) 657-0331

DESIGN: EDWARD P. BUTTS, P.E. / ADAM E. BUTTS, EI
DRAWN: SINCERE SALTARELLO
DATE: JUNE 4, 2013
DRAWING:
SCALE: AS SHOWN

REVISIONS:

No.	Date	By
1	JAN 27, 2014	SS

SHEET: S-1A

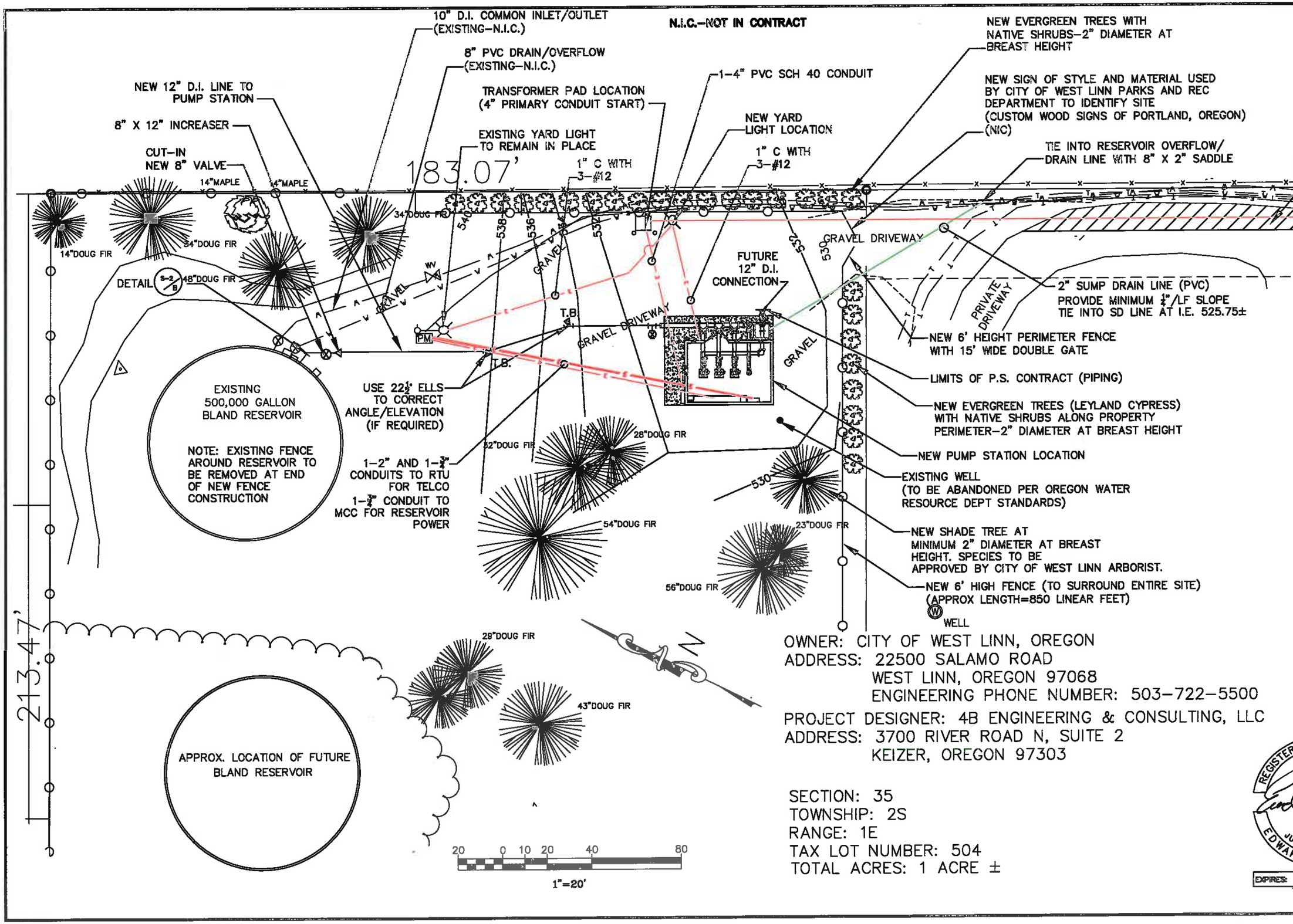

OWNER: CITY OF WEST LINN, OREGON
ADDRESS: 22500 SALAMO ROAD
WEST LINN, OREGON 97068
ENGINEERING PHONE NUMBER: 503-722-5500

PROJECT DESIGNER: 4B ENGINEERING & CONSULTING, LLC
ADDRESS: 3700 RIVER ROAD N, SUITE 2
KEIZER, OREGON 97303

SECTION: 35
TOWNSHIP: 2S
RANGE: 1E
TAX LOT NUMBER: 504
TOTAL ACRES: 1 ACRE ±

REGISTERED PROFESSIONAL ENGINEER 13,250 OREGON JULY 17, 1986 EDWARD P. BUTTS

EXPIRES: 12-31-15

4B ENGINEERING & CONSULTING, LLC
3700 RIVER ROAD N, SUITE 2
KEIZER, OREGON 97303
(503) 589-1115

CITY OF WEST LINN
BLAND CIRCLE INTERTIE P.S.
SITE PLAN

PREPARED FOR:
CITY OF WEST LINN
22500 SALAMO ROAD
WEST LINN, OREGON 97068
(503) 657-0331

DESIGN: EDWARD P. BUTTS, P.E. / ADAM E. BUTTS, E.I.
DRAWN: BROOKE SALTARELLO
DATE: JUNE 4, 2013
DRAWING:
SCALE: AS SHOWN

REVISIONS:

No.	Date	By
1	JAN 27, 2014	BS

SHEET: S-1B

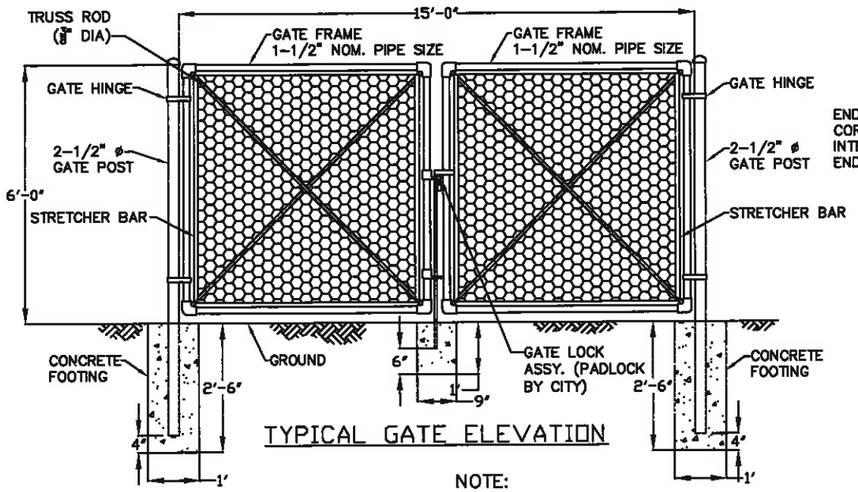

TYPICAL GATE ELEVATION

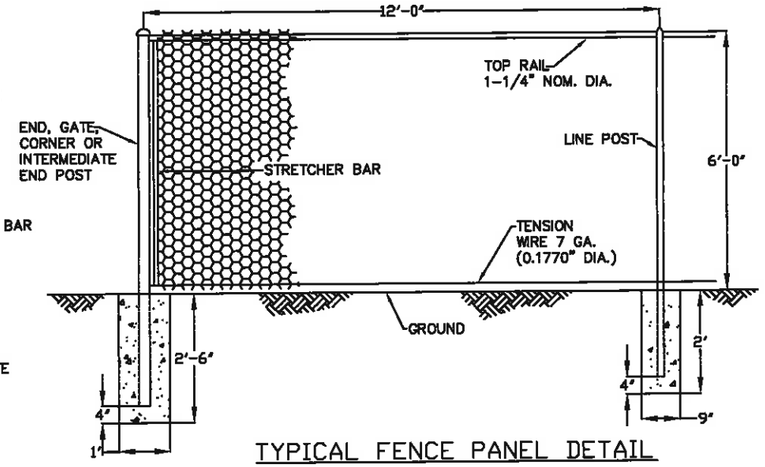

TYPICAL FENCE PANEL DETAIL

NOTE:

1. BLACK POWDER COATING ON ALL HARDWARE AND ACCESSORIES IS REQUIRED.
2. ALL MATERIAL AND WORKMANSHIP SHALL BE IN

TYPICAL FENCE DETAILS (S-2/A)
SCALE: NTS

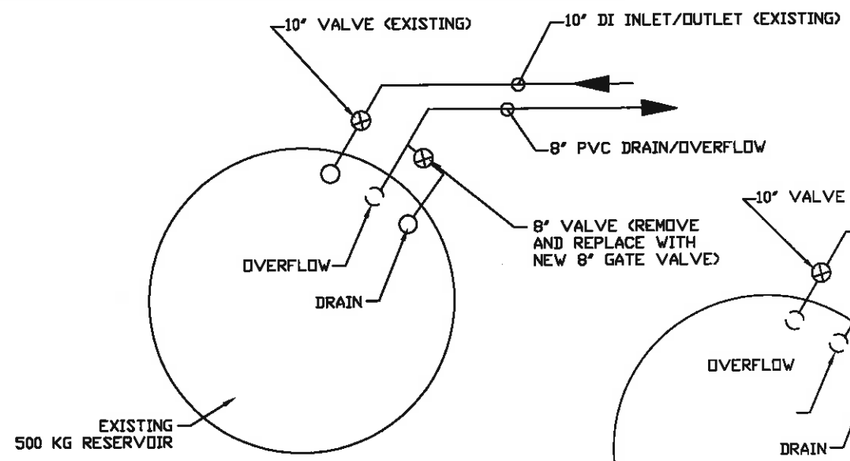

EXISTING PIPING CONFIGURATION (S-2/B1)
SCALE: NTS

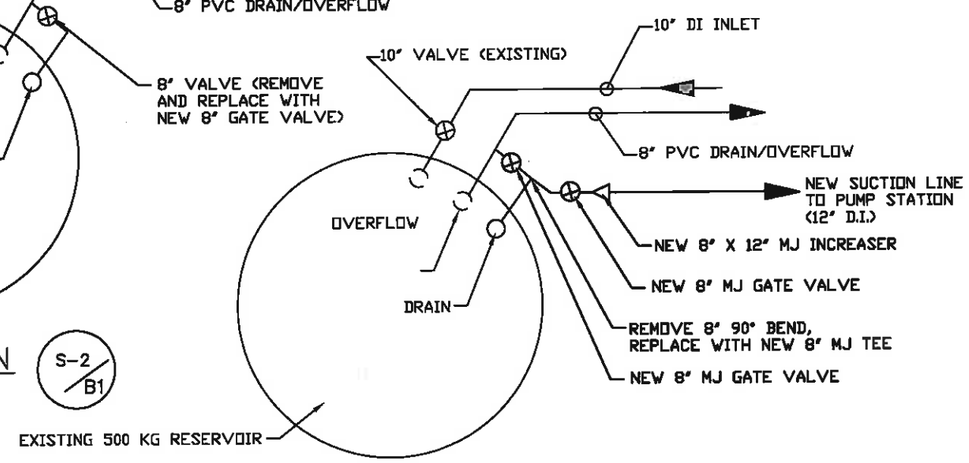

NEW REVISED PIPING LAYOUT (S-2/B2)
SCALE: NTS

PIPING CONNECTION SCHEMATIC AT RESERVOIR (S-2/B)
SCALE: NTS

4B ENGINEERING & CONSULTING, LLC
3700 RIVER ROAD N. SUITE 2
KEIZER, OREGON 97303
(503) 589-1115

CITY OF WEST LINN
BLAND CIRCLE INTERTIE P.S.
SITE DETAILS

PREPARED FOR:
CITY OF WEST LINN
22500 SALAMO ROAD
WEST LINN, OREGON 97068
(503) 657-0331

DESIGN: EDWARD P. BUTTS, P.E. / ADAM E. BUTTS, II
DRAWN: BROOKE SALTARELLO
DATE: AUGUST 19, 2013
DRAWING:
SCALE: AS SHOWN

REVISIONS:

No.	Date	By

SHEET: S-2

REGISTERED PROFESSIONAL ENGINEER
17250
OREGON
JULY 17, 1986
EDWARD P. BUTTS

EXPIRES: 12-31-15

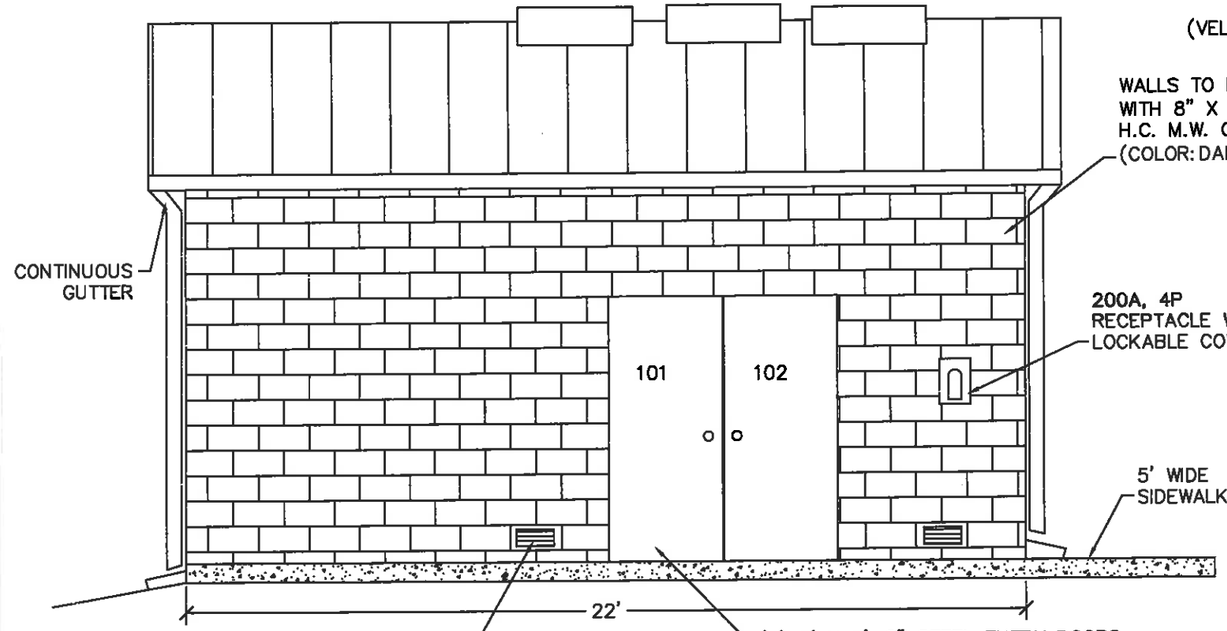

EAST ELEVATION
SCALE: 1" = 4'-0"

3-34" X 34" SKYLIGHTS CENTERED OVER PUMPS (VELUX FCM3434 OR APPROVED EQUAL)

WALLS TO BE BUILT WITH 8" X 8" X 16" H.C. M.W. CMU BLOCK (COLOR: DARK GREEN)

5 12

200A, 4P RECEPTACLE WITH LOCKABLE COVER

5' WIDE SIDEWALK

(2) 3' X 6'-8" STEEL ENTRY DOORS KEYED PER CITY OF WEST LINN SPECIFICATIONS WITH FLAT THRESHOLD AND WIPER SEAL ON BOTTOM

USE 24"W 24 GAUGE METAL ROOF PANELS OVER ¾" CDX PLYWOOD AND ONE (1) LAYER 30# FELT. USE PLYCLIPS AS PER MANUFACTURER RECOMMENDATIONS.

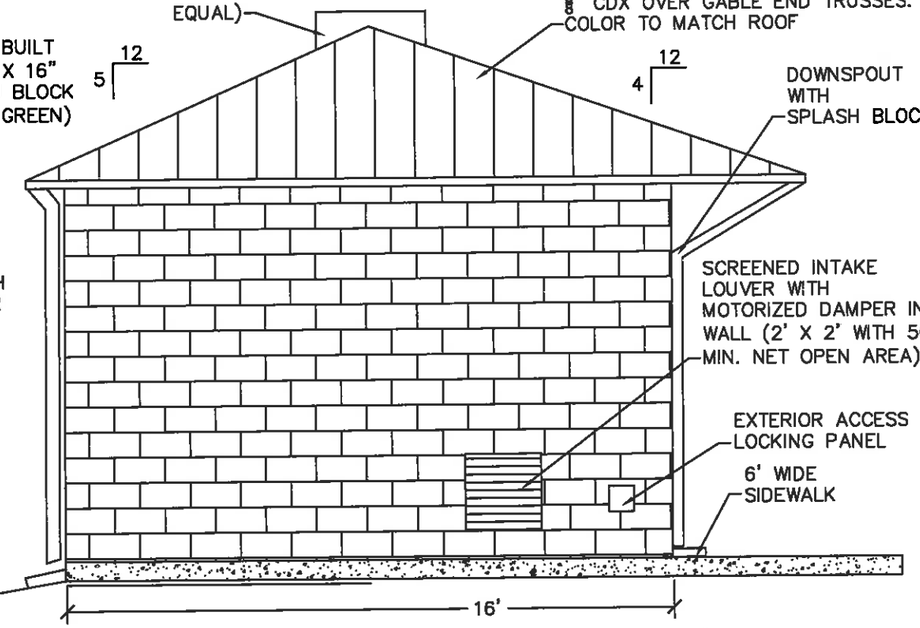

SOUTH ELEVATION
SCALE: 1" = 4'-0"

USE 24"W 24 GAUGE METAL ROOF PANELS OVER ¾" CDX PLYWOOD AND ONE (1) LAYER 30# FELT. USE PLYCLIPS AT EDGES AS PER MANUFACTURER RECOMMENDATIONS.

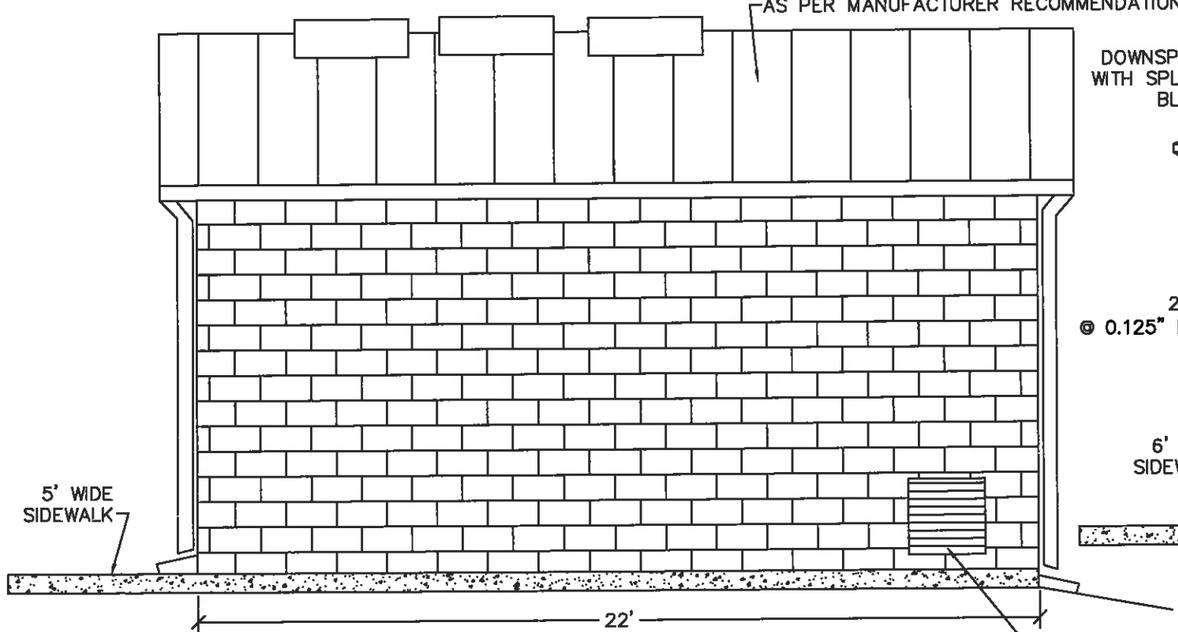

WEST ELEVATION
SCALE: 1" = 4'-0"

SCREENED INTAKE LOUVER WITH MOTORIZED DAMPER IN WALL (2' X 2' WITH 50% MIN. NET OPEN AREA)

3-34" X 34" SKYLIGHTS CENTERED OVER PUMPS (VELUX FCM3434 OR APPROVED EQUAL)

4 12

5 12

DOWNSPOUT WITH SPLASH BLOCK

WALLS TO BE BUILT WITH 8" X 8" X 16" H.C. M.W. CMU BLOCK (COLOR: DARK GREEN)

2500 CFM @ 0.125" EXHAUST FAN

CT CABINET

6' WIDE SIDEWALK

16'

NORTH ELEVATION
SCALE: 1" = 4'-0"

0' 1' 2' 3' 4' 5'

4B ENGINEERING & CONSULTING, LLC
3700 RIVER ROAD N, SUITE 2
KEIZER, OREGON 97303
(503) 589-1115

CITY OF WEST LINN
BLAND CIRCLE INTERTIE P.S.
EXTERIOR DETAILS

PREPARED FOR:
CITY OF WEST LINN
22500 SALAMO ROAD
WEST LINN, OREGON 97068
(503) 657-0331

DESIGN: EDWARD P. BUTTS, P.E.
ADAM E. BUTTS, EI
DRAWN: BROOKE SALTARELLO
DATE: AUGUST 19, 2013
DRAWING:
SCALE: AS SHOWN

REVISIONS:

No.	Date	By
1	JAN 27, 2014	BS

SHEET: B-1

REGISTERED PROFESSIONAL ENGINEER
85250
OREGON
JULY 17, 1986
EDWARD P. BUTTS

EXPIRES: 12-31-15

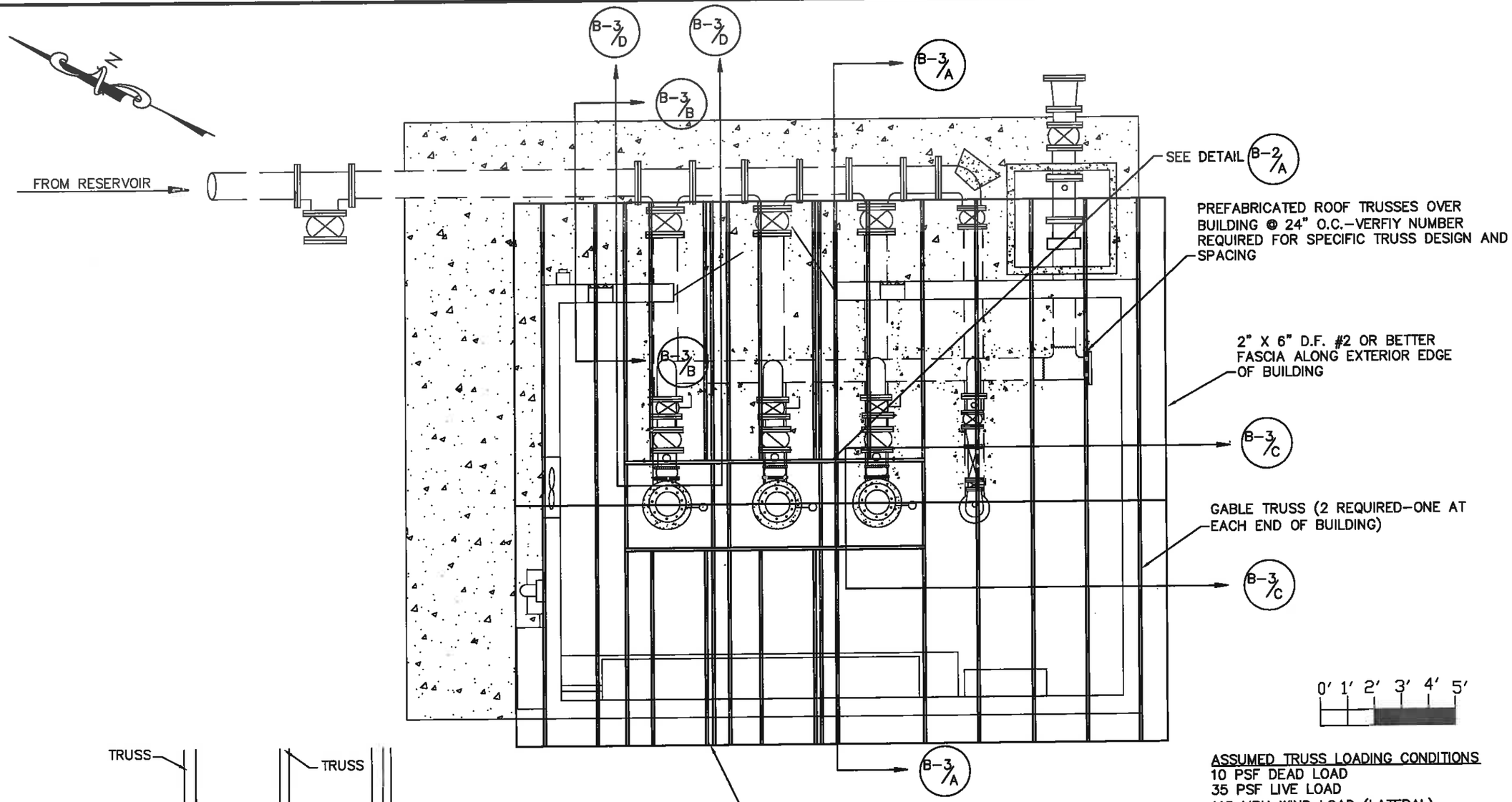

ROOF FRAMING PLAN (TYPICAL)
SCALE: 1" = 4'–0"

0' 1' 2' 3' 4' 5'

ASSUMED TRUSS LOADING CONDITIONS
10 PSF DEAD LOAD
35 PSF LIVE LOAD
115 MPH WIND LOAD (LATERAL)

NOTE: TRUSS SUPPLIER SHALL VERIFY THE NUMBER AND DESIGN OF TRUSSES AND SUPPORTING MEMBERS REQUIRED TO FACILITATE THE BUILDING DIMENSIONS WITH SKYLIGHTS.

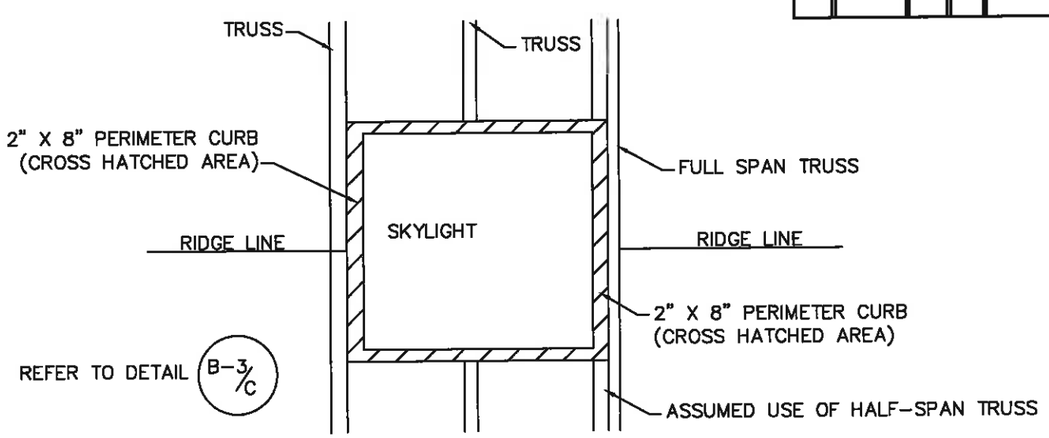

SKYLIGHT DETAIL (TYPICAL) B-2/A
SCALE: N.T.S.

4B ENGINEERING & CONSULTING, LLC
3700 RIVER ROAD N, SUITE 2
KEIZER, OREGON 97303
(503) 589-1115

CITY OF WEST LINN
BLAND CIRCLE INTERTIE P.S.
ROOF PLAN AND DETAILS

PREPARED FOR:
CITY OF WEST LINN
22500 SALAMO ROAD
WEST LINN, OREGON 97068
(503) 657-0331

DESIGN: EDWARD P. BUTTS, P.E.
ADAM E. BUTTS, E.I.
DRAWN: BROOKE SALTARELLO
DATE: AUGUST 19, 2013
DRAWING:
SCALE: AS SHOWN

REVISIONS:

No.	Date	By

SHEET: B–2

REGISTERED PROFESSIONAL ENGINEER
13,250
OREGON
JULY 17, 1986
EDWARD P. BUTTS

EXPIRES: 12-31-15

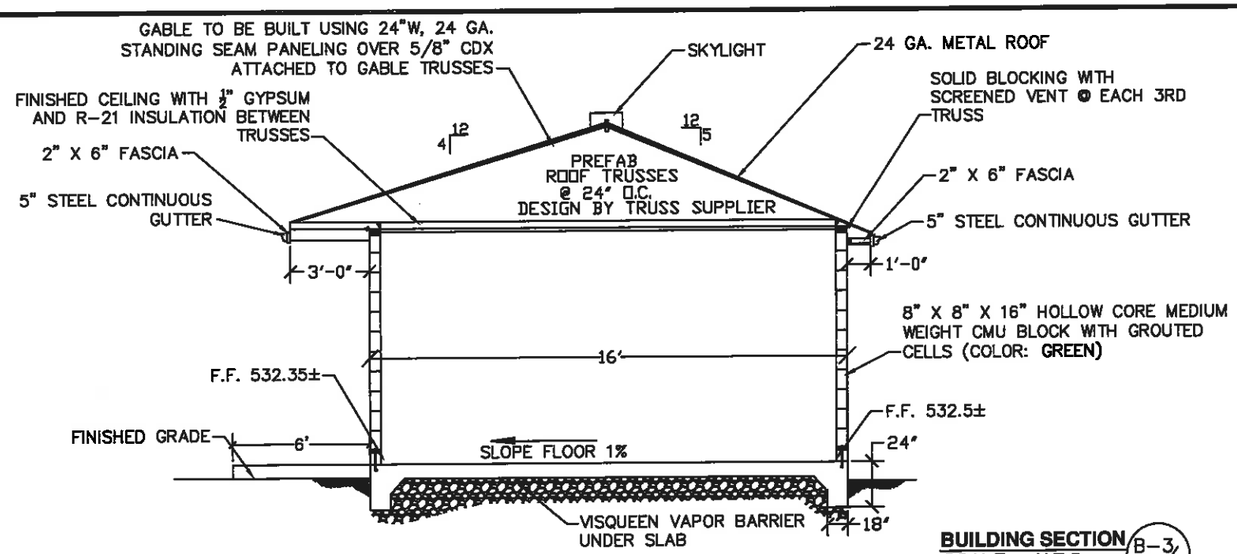

BUILDING SECTION B-3/A
SCALE: N.T.S.

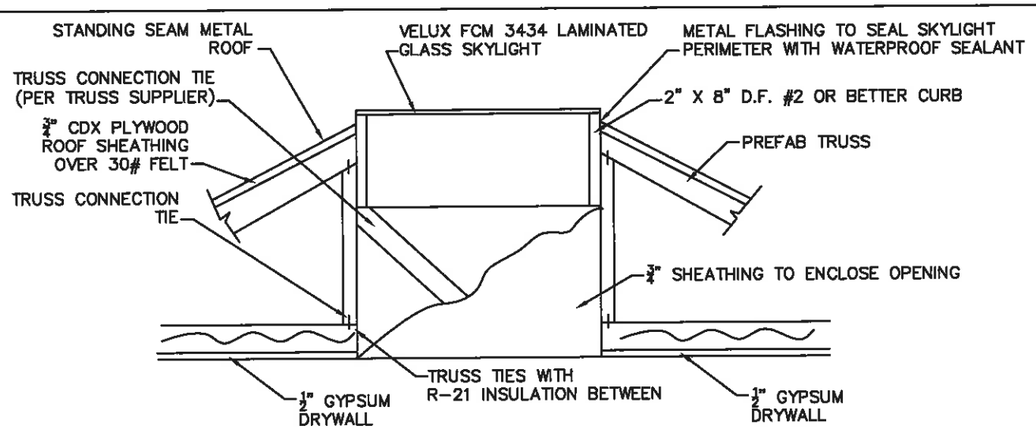

ROOF SECTION AT SKYLIGHT DETAIL (SOUTH VIEW-TYPICAL) B-3/C
SCALE: N.T.S.

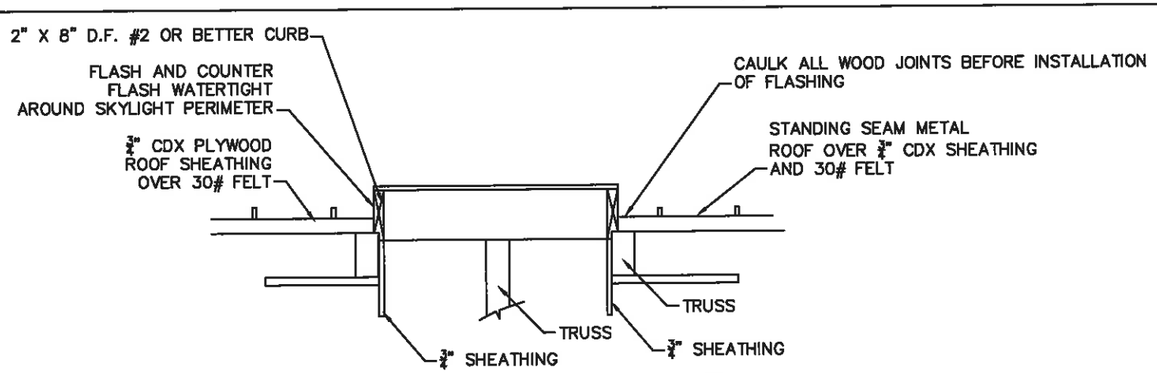

ROOF SECTION AT SKYLIGHT DETAIL (EAST VIEW-TYPICAL) B-3/D
SCALE: N.T.S.

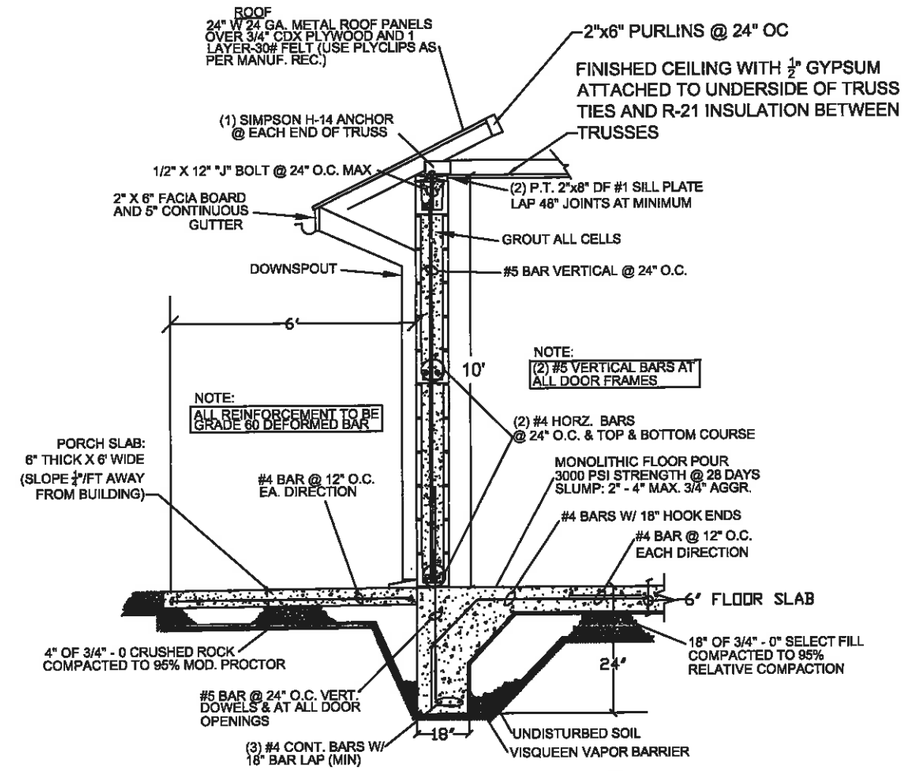

TYPICAL BUILDING SECTION B-3/B
SCALE: N.T.S.

DOOR TYPES

1 " " SHOWN ON SCHEDULE INDICATES TYPICAL
2. DOOR TYPES
3. CONSTRUCTION
   TYPICAL – SOLID CORE
   HC – HOLLOW CORE
   HM – HOLLOW METAL
   MC – MINERAL CORE
   RU – ROLL UP/COIL
   AL – ALUMINUM & GLASS
4. MATERIAL/FINISH
   TYPICAL – WOOD TRANSPARIENT
   WF – WOOD FACTORY
   PL – PLASTIC LAMINATE
   ME – METAL ENAMEL
   WE – WOOD ENAMEL
   FF – FACTORY FINISH
5. GLASS
   TYPICAL – CLEAR WIRE
   TP – TEMPERED PLATE
   SF – SAFETY GLASS
6. 20, 45, 60, 90, INDICATES RATING IN MINUTES FOR OPENING
7. TYPICAL FRAMES SHOWN " " NUMBER INDICATES DETAIL SHOWN ON SHEET.
8. NUMBER REFERS TO HARDWARE GROUP OF HARDWARE SCHEDULE
   1=LEVER HANDLE AND DEADBOLT
   2=NONE (2ND DOOR OF PAIR)
   3=DEADBOLT ONLY

A.

NOTE: LOCKS KEYED TO CITY OF WEST LINN STANDARD
NOTE: ALL DOORS TO HAVE LEVER TYPE HARDWARE

DOOR SCHEDULE

NO.	SIZE	TYPE NOTE 1	CONST(3)	FINISH(4)	GLASS(5)	RATING(6)	FRAME(7)	HDWR(8)
101	3'-0"x6'-8"x13/4"	A	HM	ME	–	–	–	1
102	3'-0"X6'-8"X13/4"	A	HM	ME	–	–	–	2

DOOR SCHEDULE B-3/E
SCALE: N.T.S.

REGISTERED PROFESSIONAL ENGINEER
13,250
OREGON
JULY 17, 1986
EDWARD P. BUTTS

EXPIRES: 12-31-15

4B ENGINEERING & CONSULTING, LLC
3700 RIVER ROAD N. SUITE 2
KEIZER, OREGON 97303
(503) 589-1115

CITY OF WEST LINN
BLAND CIRCLE INTERTIE P.S.
RIDGE AND SKYLIGHT
DETAILS

PREPARED FOR:
CITY OF WEST LINN
22500 SALAMO ROAD
WEST LINN, OREGON 97068
(503) 657-0331

DESIGN: EDWARD P. BUTTS, P.E.
DRAWN: BROOKE SALTARELLO
DATE: AUGUST 19, 2013
DRAWING:
SCALE: AS SHOWN

REVISIONS:

No.	Date	By

SHEET: B-3

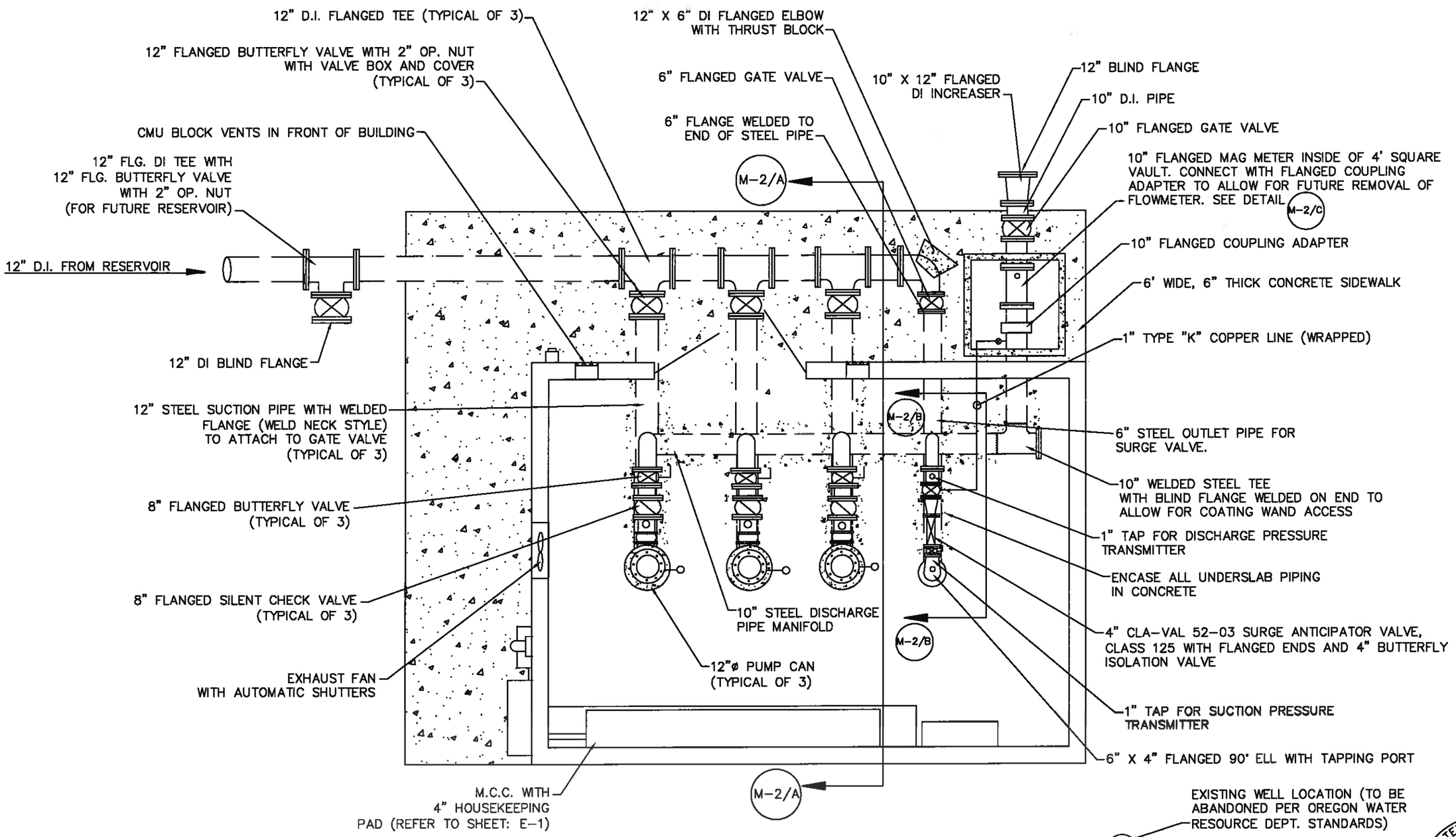

MECHANICAL PIPING
SCALE: 1" = 4'-0"

4B ENGINEERING & CONSULTING, LLC
3700 RIVER ROAD N, SUITE 2
KEIZER, OREGON 97303
(503) 589-1115

CITY OF WEST LINN
BLAND CIRCLE INTERTIE P.S.
MECHANICAL PLAN VIEW

PREPARED FOR:
CITY OF WEST LINN
22500 SALAMO ROAD
WEST LINN, OREGON 97068
(503) 657-0331

DESIGN: EDWARD P. BUTTS, P.E.
ROBERT E. BUTTS, III
DRAWN: BROOKE SALTARELLO
DATE: AUGUST 19, 2013
DRAWING:
SCALE: AS SHOWN

REVISIONS:

No.	Date	By
1	JAN 27, 2014	BS

SHEET: M-1

REGISTERED PROFESSIONAL ENGINEER
17,250
OREGON
JULY 17, 1986
EDWARD P. BUTTS

EXPIRES: 12-31-15

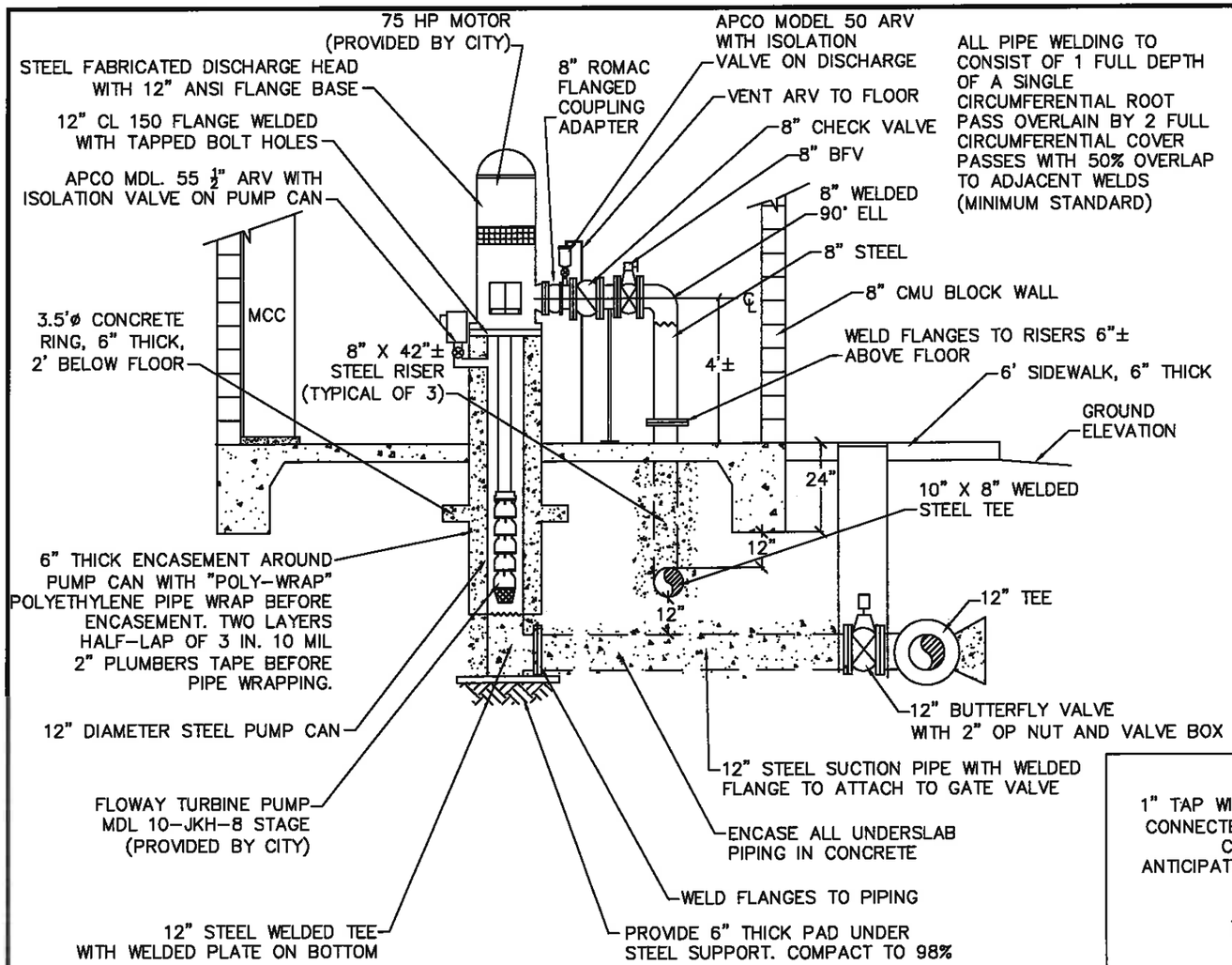

BOOSTER PUMP SECTION PIPING (M-2/A)
SCALE: 1" = 4'-0"

0' 1' 2' 3' 4' 5'

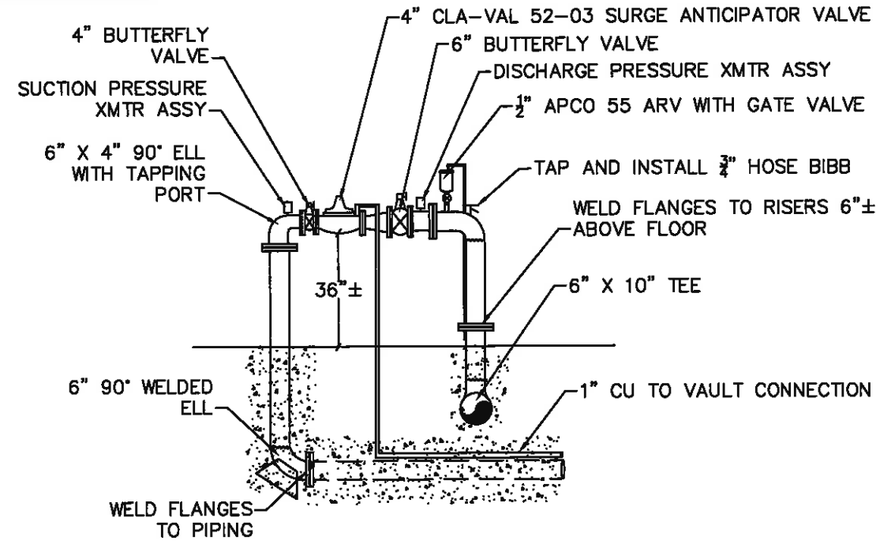

MECHANICAL PIPING (M-2/B)
SCALE: 1" = 4'-0"

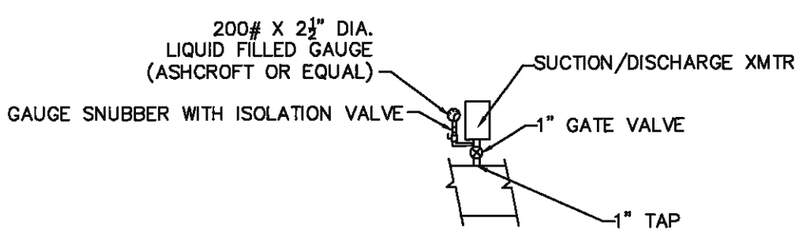

TYPICAL GAUGE ASSY. (M-2/D)
SCALE: NTS

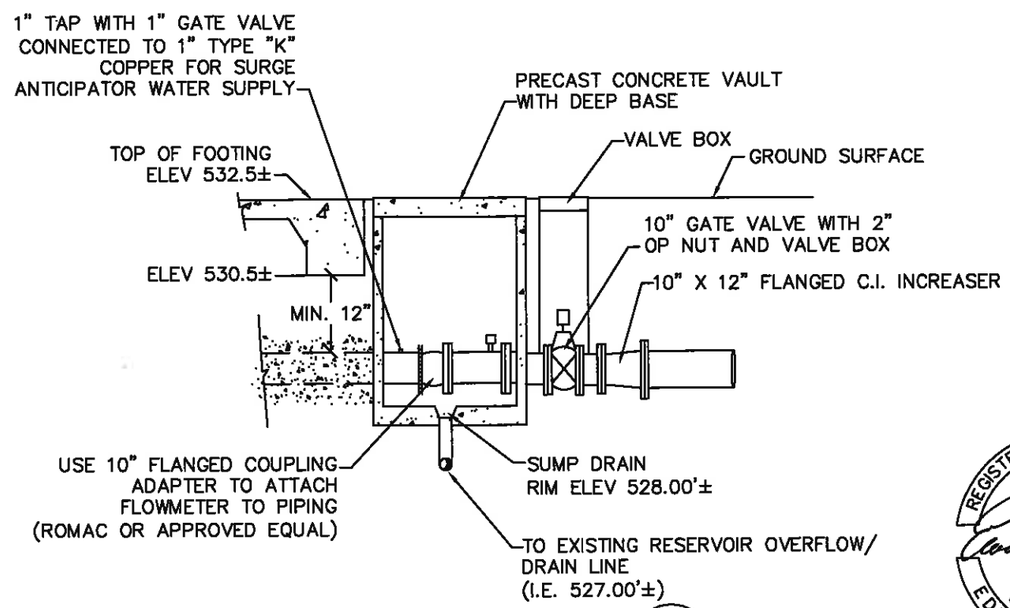

VAULT DETAIL (M-2/C)
SCALE: 1" = 4'-0"

4B ENGINEERING & CONSULTING, LLC
3700 RIVER ROAD N, SUITE 2
KEIZER, OREGON 97303
(503) 589-1115

CITY OF WEST LINN
BLAND CIRCLE INTERTIE P.S.
MECHANICAL ELEV. VIEW

PREPARED FOR:
CITY OF WEST LINN
22500 SALAMO ROAD
WEST LINN, OREGON 97068
(503) 657-0331

DESIGN: EDWARD P. BUTTS, P.E.
ADAM E. BUTTS, EI
DRAWN: BROOKE BALTARELLO
DATE: AUGUST 19, 2013
DRAWING:
SCALE: AS SHOWN

REVISIONS:

No.	Date	By
1	JAN 27, 2014	BS

SHEET: M-2

REGISTERED PROFESSIONAL ENGINEER
13,250
OREGON
JULY 17, 1986
EDWARD P. BUTTS

EXPIRES: 12-31-15

FITTING SIZE (Inches)	TEE, WYE, & ① HYDRANTS	STRADDLE BLOCK ②	90° BEND ③ PLUGGED CROSS TEE PLUGGED–RUNS	45° BEND ④	22 1/2° BEND ④	11 1/2° BEND ④
2	*	*	*	*	*	*
4	1.7	2.1	2.4	1.3	*	*
6	3.7	4.9	5.3	2.9	1.5	*
8	6.7	8.7	9.5	5.1	2.7	1.3
10	10.5	13.6	14.8	8	4.1	2
12	15.1	19.6	21.3	11.6	5.9	2.9
14						
16	26.8	34.8	37.9	20.5	10.4	5.2
18	33.9	44	47.9	25.9	12.8	6.7
LARGER	**	**	**	**	**	**
BEARING AREA OF THRUST BLOCKS (sq. ft.)						

1. ALL VALUES ARE BASED ON THE FOLLOWING ASSUMPTIONS: AVG. PRESSURE = 100 PSI X 2 (safety factor); 1500 PSF SOIL BEARING CAPACITY; NORMAL DISTRIBUTION DESIGN VELOCITY NOT TO EXCEED 5 F/S.
2. ALL FITTINGS SHALL BE WRAPPED IN 8 MM PLASTIC PRIOR TO PLACEMENT OF CONCRETE.
3. BEARING SURFACE OF THRUST BLOCKING SHALL BE AGAINST UNDISTURBED SOIL
4. ALL CONCRETE MIX SHALL HAVE A MIN. 28 DAY STRENGTH OF 3000 PSI.
5. ALL PIPE ZONES SHALL BE GRAVEL FILLED AND COMPACTED.
6. THRUST BLOCKS FOR PLUGGED CROSS AND PLUGGED TEE SHALL HAVE #4 REBAR LIFTING LOOPS INSTALLED AS SHOWN.
7. VERTICAL THRUST DETAILS–SEE DWG. WL–407.
8. STRADDLE BLOCK DETAILS–SEE DWG. WL–408.

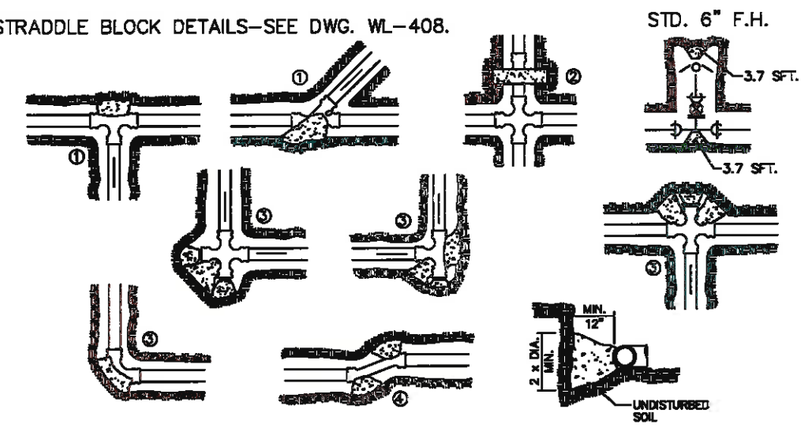

* BLOCK TO UNDISTURBED TRENCH WALLS.

** THRUST BLOCKS FOR PIPES LARGER THAN 18" WILL BE INDIVIDUALLY DESIGNED BY THE ENGINEER.

VERTICAL THRUST BLOCK DETAIL (M-3/A)
NTS

NOTE:

1. GRAVITY VERTICAL THRUST BLOCKS SHALL BE DESIGNED BY THE ENGINEER.
2. KEEP CONCRETE CLEAR OF JOINT AND JOINT ACCESSORIES. FITTINGS SHALL BE WRAPPED IN 8MM PLASTIC PRIOR TO PLACEMENT OF CONCRETE.
3. CONCRETE THRUST BLOCKING SHALL BE POURED AGAINST UNDISTURBED EARTH.
4. CONCRETE MIX SHALL HAVE A MIN. 28 DAY STRENGTH OF 3300 P.S.I.
5. THRUST BLOCK VOLUMES FOR VERTICAL BENDS HAVING UPWARD RESULTANT THRUSTS SHALL BE BASED ON TEST PRESSURE OF 180 PSI AND THE WEIGHT OF CONCRETE = 4050 LBS./CU.YD.
6. VERTICAL BENDS THAT REQUIRE A THRUST BLOCK VOLUME EXCEEDING 5 CUBIC YARDS REQUIRE SPECIAL BLOCKING DETAILS. SEE PLANS FOR VOLUMES SHOWN INSIDE HEAVY LINE IN TABLE BELOW.
7. PAYMENT SHALL BE THE SAME AS FOR HORIZONTAL THRUST BLOCKS.
8. ALL REBAR SHALL BE GALVANIZED IN ACCORDANCE WITH ASTM–123 (MIN. 3.4 MIL). REBAR SHALL BE BENT BEFORE GALVANIZATION, AND LAST 4" OF BAR SHALL BE BENT 90 DEGREES WITH A 1/2" RADIUS BEND. REBAR SHALL BE TIGHTLY FIT TO RESTRAINED FITTING.
9. FOR HORIZONTAL THRUST BLOCK DETAILS SEE DWG NO. WL–406.

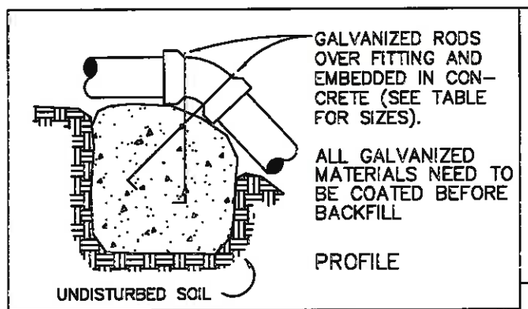

GRAVITY VERTICAL THRUST BLOCK

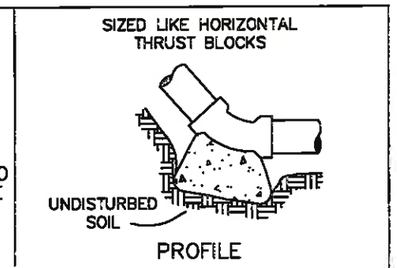

NORMAL VERTICAL THRUST BLOCK

FITTING SIZE	ROD SIZE	EMBEDMENT
12" AND LESS	#6	30"
14" – 16"	#8	36"

VOLUME OF THRUST BLOCK IN CUBIC YARDS (VERTICAL BENDS)			
FITTING SIZE	BEND ANGLE		
	45°	22 1/2°	11 1/4°
4	1.1	0.4	0.2
6	2.7	1.0	0.4
8	4.0	1.5	0.6
10	6.0	2.3	0.9
12	8.5	3.2	1.3
14	11.5	4.3	1.8
16	14.8	5.6	2.3

THRUST BLOCK DETAIL (M-3/B)
NTS

4B ENGINEERING & CONSULTING, LLC
3700 RIVER ROAD N, SUITE 2
KEIZER, OREGON 97303
(503) 589-1115

CITY OF WEST LINN
BLAND CIRCLE INTERTIE P.S.
THRUST BLOCK DETAILS

PREPARED FOR:
CITY OF WEST LINN
22500 SALAMO ROAD
WEST LINN, OREGON 97068
(503) 657-0331

DESIGN: EDWARD P. BUTTS, P.E. / ADAM E. BUTTS, E.I.
DRAWN: BROOKE BALTARSILO
DATE: AUGUST 19, 2013
DRAWING:
SCALE: AS SHOWN

REVISIONS:

No.	Date	By

SHEET: M-3

REGISTERED PROFESSIONAL ENGINEER 13,250 OREGON JULY 17, 1986 EDWARD P. BUTTS

EXPIRES: 12-31-15

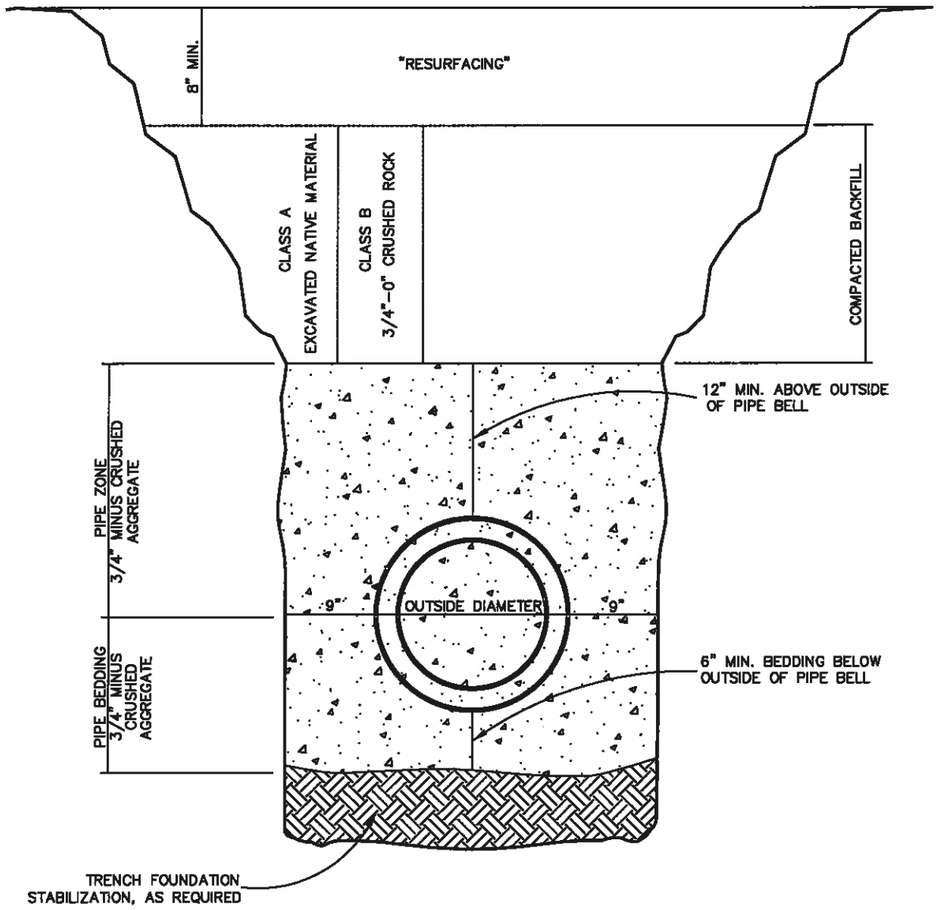

TRENCH BACKFILL BEDDING AND PIPE ZONE
SCALE: NTS

M-4/A

ACCORDANCE WITH THE CURRENT STATE OF OREGON STANDARD SPECIFICATIONS FOR HIGHWAY CONSTRUCTION.

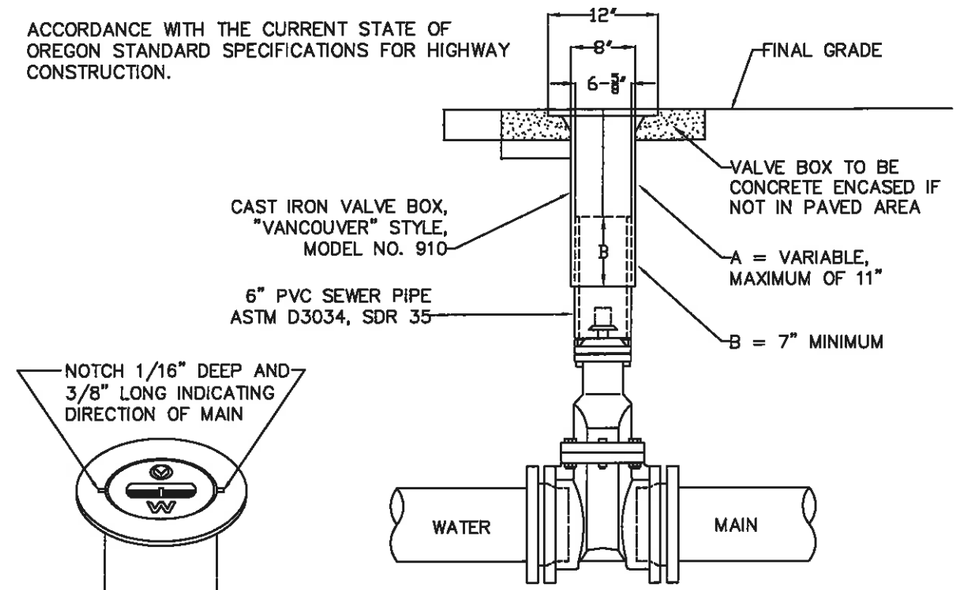

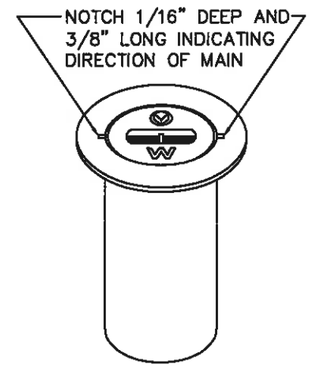

"VANCOUVER"
18" TALL VALVE BOX

VALVE BOX DETAIL
SCALE: NTS

M-4/B

NOTE:

1. VALVE BOXES SHALL BE CENTERED DIRECTLY OVER THE VALVE NUT IN A VERTICAL POSITION.
2. VALVE BOX TOP SHALL BE ADJUSTED TO MEET FINISHED GRADE.
3. PVC SHALL BE ONE CONTINUOUS PIECE–NO BELLS OR COUPLERS.
4. ON VALVES 8" AND LARGER, PVC SHALL BE NOTCHED OVER VALVE PACKING BOLTS SO PVC SITS ON BONNET.

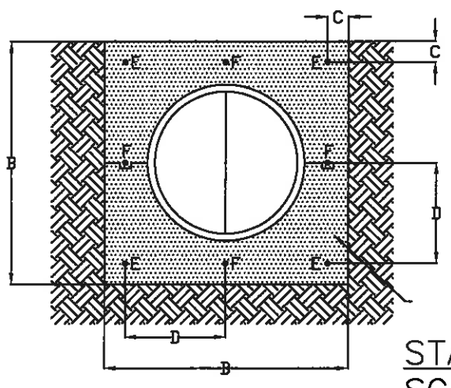

NOTE:
CONCRETE SHALL BE 3000 PSI
2" TO 4" SLUMP

ALL REINFORCING STEEL SHALL BE NO. 5 DEFORMED BARS WITH 18" LAP SPLICES AND 3" CLEAR COVER.

STANDARD PIPE ENCASEMENT
SCALE: NTS

M-4/C

PLACE CONCRETE IN TWO LIFTS. DO NOT PLACE THE TOP SECTION UNTIL THE BOTTOM SECTION HAS SET FOR 24 HOURS. PROVIDE THE KEY AS SHOWN.

	DIMENSION (INCHES)				BARS REQ'D	C.Y. CONC. PER LIN. FT.	LBS. STEEL PER LIN. FT.
	A	B	C	D			
BELL & SPIGOT AND TONGUE & GROOVE STD. STRENGTH	6	16	3–1/2	–	E	0.055	4.17
	8	18	3–1/2	–	E	0.070	4.17
	10	20	3–1/2	–	E	0.080	4.17
	12	22–1/2	3–1/2	–	E	0.090	4.17
	15	26	3–1/2	–	E	0.100	4.17
	18	30	3–1/2	–	E	0.140	4.17
BELL & SPIGOT STD. STRENGTH	21	38	3–1/2	15–1/2	E, F	0.250	8.34
	24	42	3–1/2	17–1/2	E, F	0.260	8.34
	27	50	3–1/2	21–1/2	E, F	0.400	8.34
TONGUE & GROOVE STD. STRENGTH	21	36	3–1/2	14–1/2	E, F	0.190	8.34
	24	41	3–1/2	17–1/2	E, F	0.250	8.34
	27	46	3–1/2	19–1/2	E, F	0.320	8.34

4B ENGINEERING & CONSULTING, LLC
3700 RIVER ROAD N, SUITE 2
KEIZER, OREGON 97303
(503) 589–1115

CITY OF WEST LINN
BLAND CIRCLE INTERTIE P.S.
MECHANICAL DETAILS

PREPARED FOR:
CITY OF WEST LINN
22500 SALAMO ROAD
WEST LINN, OREGON 97068
(503) 657–0331

DESIGN: EDWARD P. BUTTS, P.E.
ADAM E. BUTTS, E.I.
DRAWN: BROOKE SALTARELLO
DATE: AUGUST 19, 2013
DRAWING:
SCALE: AS SHOWN

REVISIONS:

No.	Date	By

SHEET: M–4

REGISTERED PROFESSIONAL ENGINEER
10,250
OREGON
JULY 17, 1986
EDWARD P. BUTTS

EXPIRES: 12-31-15

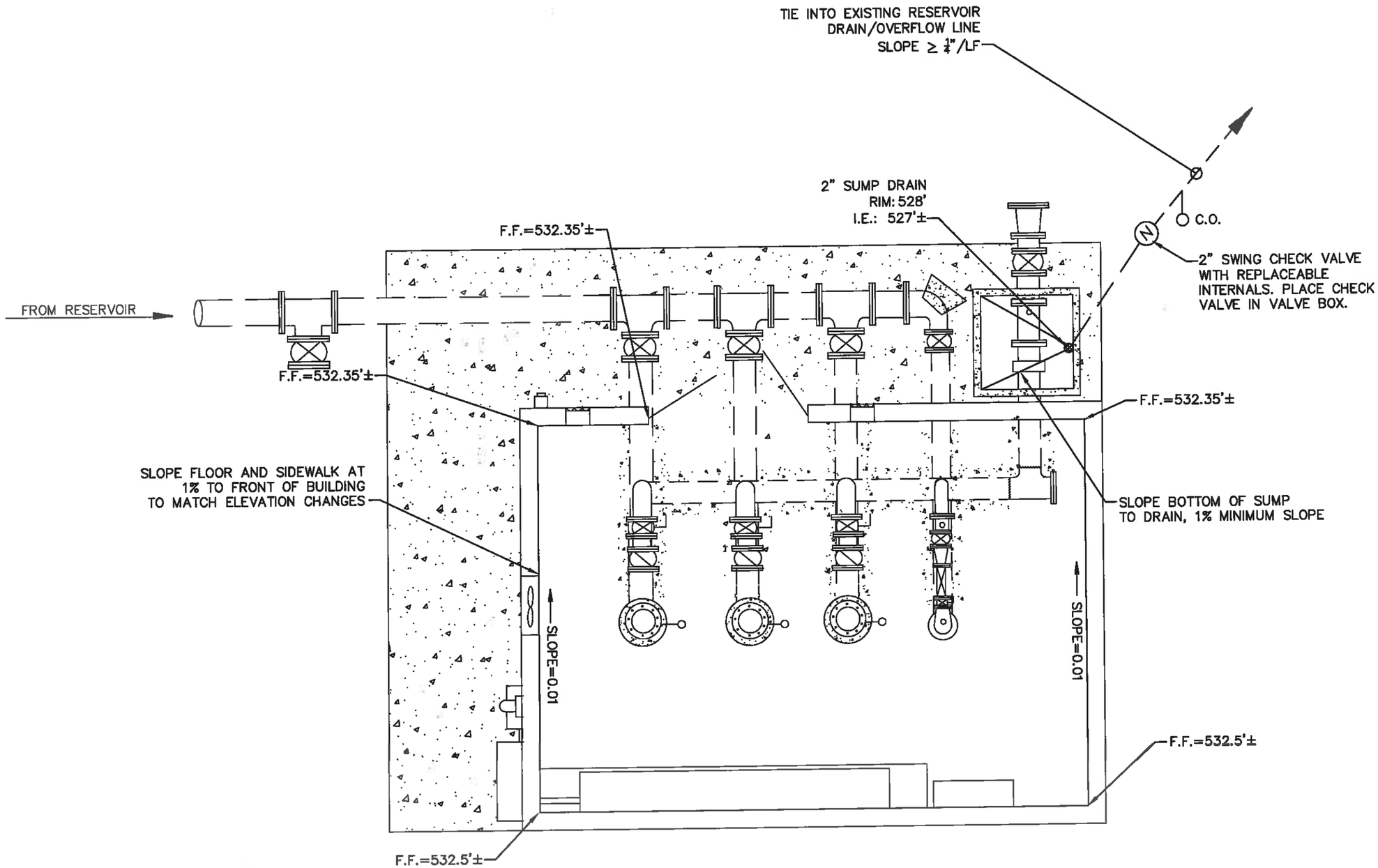

DRAIN DETAILS
SCALE: 1" = 4'-0"

0' 1' 2' 3' 4' 5'

4B ENGINEERING & CONSULTING, LLC
3700 RIVER ROAD N, SUITE 2
KEIZER, OREGON 97303
(503) 589-1115

CITY OF WEST LINN
BLAND CIRCLE INTERTIE P.S.
DRAIN PLAN VIEW

PREPARED FOR:
CITY OF WEST LINN
22500 SALAMO ROAD
WEST LINN, OREGON 97068
(503) 657-0331

DESIGN: EDWARD P. BUTTS, P.E.
KURT E. BUTTS, E.I.T.
DRAWN: BROOKE SALTARELLO
DATE: AUGUST 19, 2013
DRAWING:
SCALE: AS SHOWN

REVISIONS:

No.	Date	By

SHEET: D-1

REGISTERED PROFESSIONAL ENGINEER
13250
OREGON
JULY 17, 1986
EDWARD P. BUTTS

EXPIRES: 12-31-15

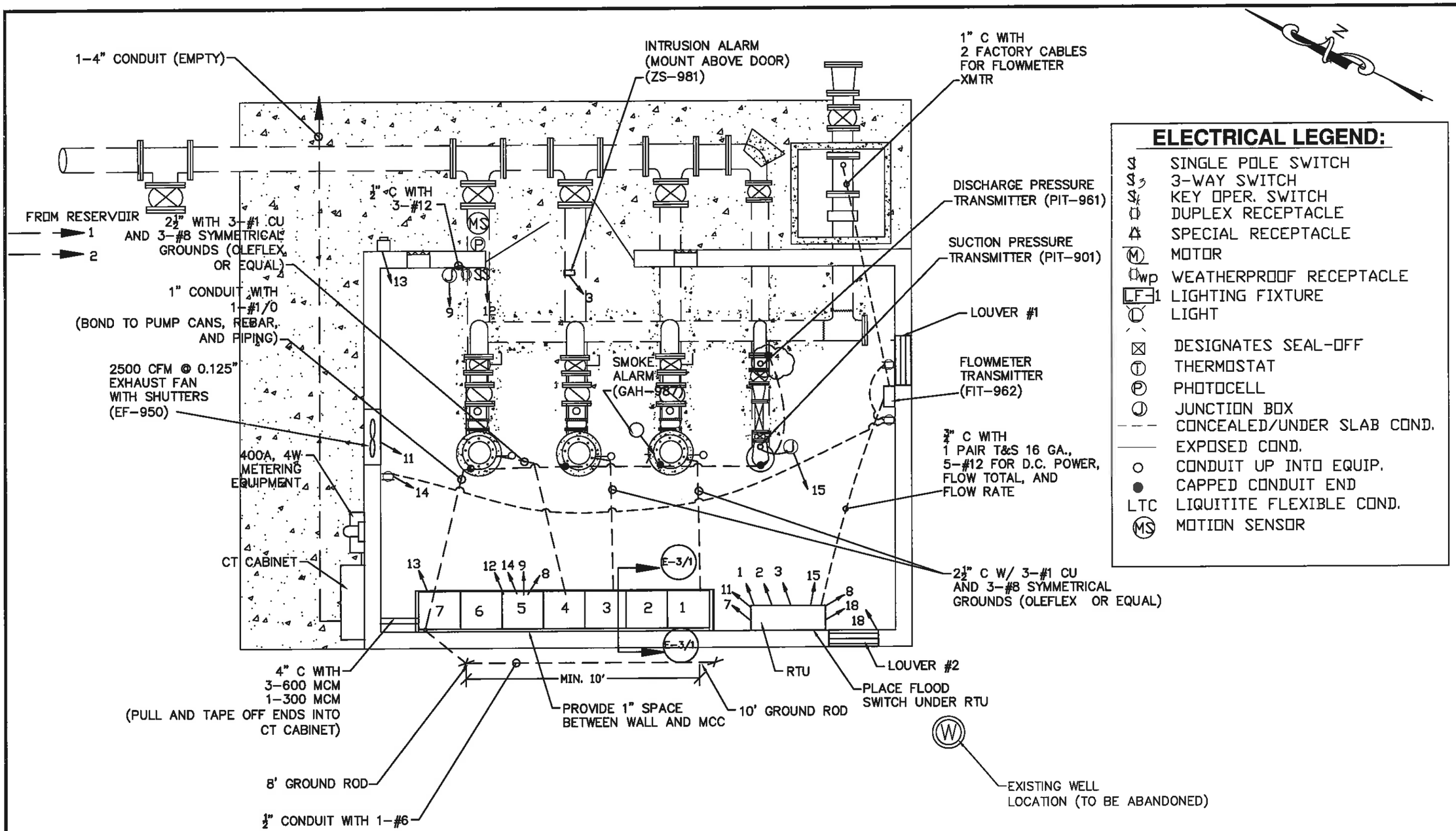

ELECTRICAL LEGEND:

S	SINGLE POLE SWITCH
S3	3-WAY SWITCH
Sk	KEY OPER. SWITCH
	DUPLEX RECEPTACLE
	SPECIAL RECEPTACLE
M	MOTOR
wp	WEATHERPROOF RECEPTACLE
LF-1	LIGHTING FIXTURE
	LIGHT
⊠	DESIGNATES SEAL-OFF
T	THERMOSTAT
P	PHOTOCELL
J	JUNCTION BOX
- - -	CONCEALED/UNDER SLAB COND.
——	EXPOSED COND.
○	CONDUIT UP INTO EQUIP.
●	CAPPED CONDUIT END
LTC	LIQUITITE FLEXIBLE COND.
MS	MOTION SENSOR

ELECTRICAL DETAILS
SCALE: 1" = 4'-0"

0' 1' 2' 3' 4' 5'

4B ENGINEERING & CONSULTING, LLC
3700 RIVER ROAD N, SUITE 2
KEIZER, OREGON 97303
(503) 589-1115

CITY OF WEST LINN
BLAND CIRCLE INTERTIE P.S.
ELECTRICAL PLAN VIEW

PREPARED FOR:
CITY OF WEST LINN
22500 SALAMO ROAD
WEST LINN, OREGON 97068
(503) 657-0331

DESIGN: EDWARD P. BUTTS, P.E.
JOHN E. BUTTS, III
DRAWN: BROOKE SALTARELLO
DATE: JANUARY 29, 2012
DRAWING:
SCALE: AS SHOWN

REVISIONS:

No.	Date	By
1	JAN 27, 2014	BS

SHEET: E-1

REGISTERED PROFESSIONAL ENGINEER
17250
OREGON
JULY 17, 1986
EDWARD P. BUTTS

EXPIRES: 12-31-15

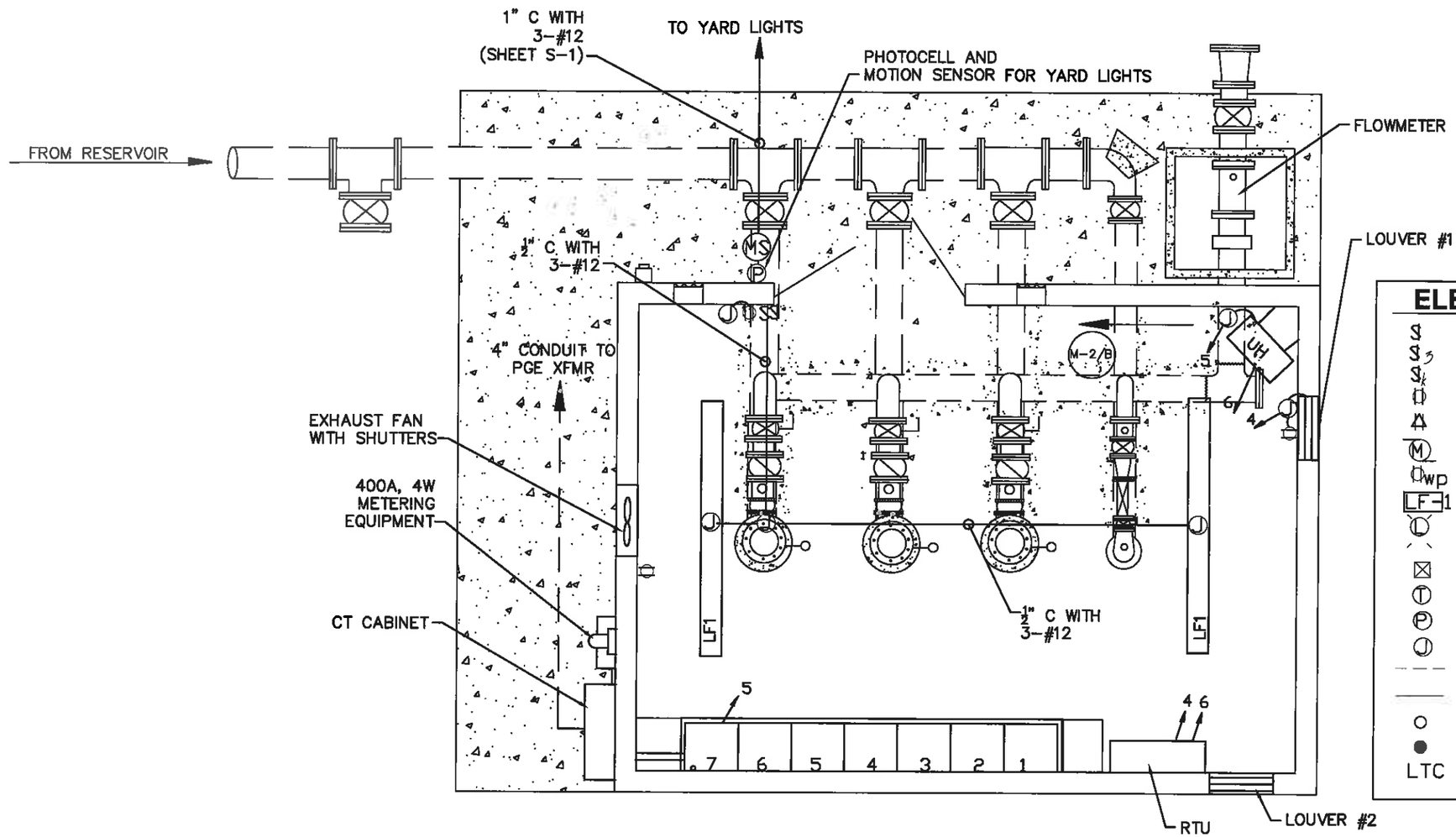

ELECTRICAL LEGEND:

S	SINGLE POLE SWITCH
S3	3-WAY SWITCH
Sk	KEY OPER. SWITCH
	DUPLEX RECEPTACLE
	SPECIAL RECEPTACLE
M	MOTOR
wp	WEATHERPROOF RECEPTACLE
LF-1	LIGHTING FIXTURE
	LIGHT
⊠	DESIGNATES SEAL-OFF
T	THERMOSTAT
P	PHOTOCELL
J	JUNCTION BOX
- - -	CONCEALED/UNDER SLAB COND.
——	EXPOSED COND.
○	CONDUIT UP INTO EQUIP.
●	CAPPED CONDUIT END
LTC	LIQUITITE FLEXIBLE COND.

LF1: LITHONIA UND-2-96HO
TWO 110W, T12 FIXTURES
8' LINEAR FLUORESCENT

UH: 7.5KW, 3ø, 480 VAC RESISTANCE HEATER

NOTE: REFER TO SHEET E-3
FOR CONDUIT DESCRIPTIONS

LIGHTING DETAILS
SCALE: 1" = 4'-0"

0' 1' 2' 3' 4' 5'

REGISTERED PROFESSIONAL ENGINEER
53250
OREGON
JULY 17, 1986
EDWARD P. BUTTS
EXPIRES: 12-31-15

4B ENGINEERING & CONSULTING, LLC
3700 RIVER ROAD N, SUITE 2
KEIZER, OREGON 97303
(503) 589-1115

CITY OF WEST LINN
BLAND CIRCLE INTERTIE P.S.
LIGHTING PLAN

PREPARED FOR:
CITY OF WEST LINN
22500 SALAMO ROAD
WEST LINN, OREGON 97068
(503) 657-0331

DESIGN: EDWARD P. BUTTS, P.E.
ADAM E. BUTTS, E.I.
DRAWN: BROOKE SALTARELLO
DATE: JANUARY 28, 2012
DRAWING:
SCALE: AS SHOWN

REVISIONS:

No.	Date	By
1	JAN 27, 2014	BS

SHEET: E-2

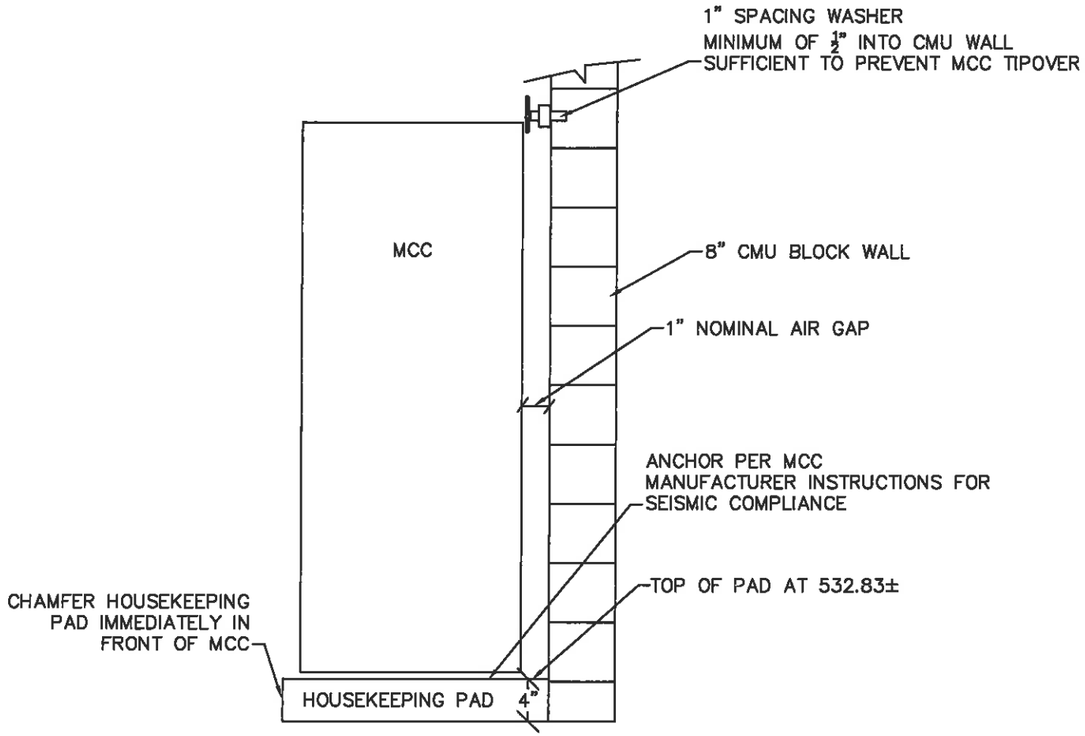

PUMP STATION ELECTRICAL ELEVATIONS (E-3/A)
SCALE: N.T.S.

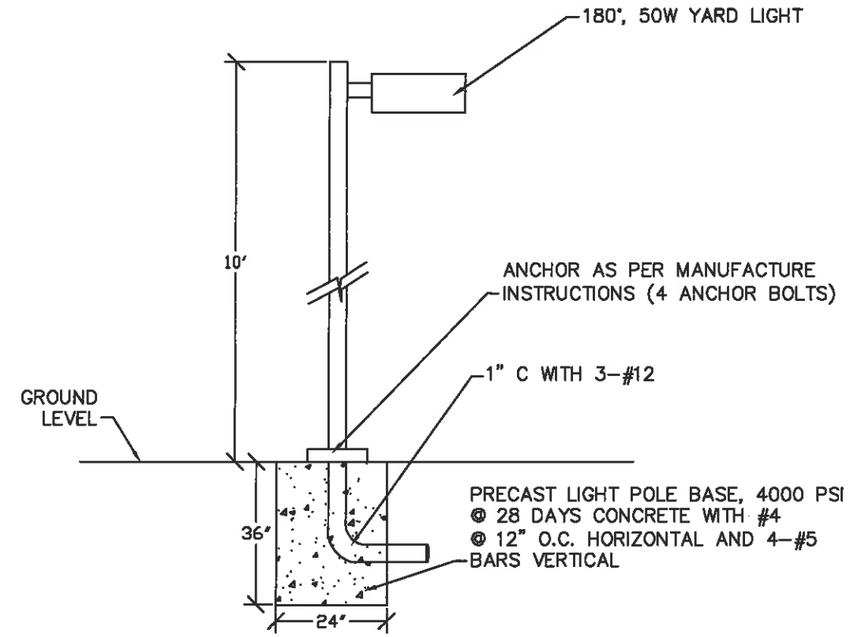

YARD LIGHT DETAIL (E-3/B)
SCALE: N.T.S.

RACEWAY NUMBER	ORIGIN	DESTINATION	CONDUIT SIZE	NO. & SIZE OF CONDUCTORS	LOAD DESCRIPTION
1	RTU	RESERVOIR	3/4"	4-#12; 2 PAIR 16 GA. T&S	RESERVOIR OVERFLOW, HATCH, LEVEL
2	MCC SEC. 5 (PB)	NEW TERMINAL JUNCTION BOX	3/4"	5-#12	POWER FOR CATHODIC PROTECTION/OUTLET
3	RTU	FRONT DOOR INTRUSION	1/2"	1 PAIR 16 GA. T&S	INTRUSION ALARM
4	RTU	LOUVER 1	1/2"	3-#12	LOUVER POWER AND CONTROL
5	MCC SEC. 7 (CB)	JUNCTION BOX (UH)	1/2"	4-#12	HEATER POWER
6	UH	RTU	1/2"	3-#12	HEATING CONTROL
7	RTU	SMOKE ALARM	1/2"	3-#12	SMOKE ALARM
8	RTU	FIT-962 (FLOWMETER XMTR)	1/2"	1 PAIR 16 GA. T&S	DISCHARGE PRESSURE
9	MCC SEC 5 (PB)	JUNCTION BOX AT FRONT DOOR	1/2"	3-#12	LIGHTING SWITCH AND FRONT DOOR OUTLET
10	MCC SEC 5 (PB)	RTU	1/2"	5-#12	RTU POWER
11	RTU	FAN	1/2"	3-#12	FAN POWER AND CONTROL
12	MCC SEC 5 (PB)	SITE LIGHTING	1"	3-#12	SITE LIGHTING
13	GENERATOR RECPT.	MCC SECTION 7	2-1/2"	3-3/0, 1-#4 GRD, 1-#1 NEU	GENERATOR CONNECTION (200A)
14	MCC SEC 5 (PB)	OUTLETS	1/2"	3-#12	OUTLET POWER
15	RTU	PRESSURE GAUGES	1/2"	2 PAIR 16 GA. T&S	PRESSURE GAUGES
16	RTU	MCC CONTROL	3/4"	PROFIBUS	MCC CONTROL (FACTORY SUPPLIED CABLE)
17	RTU	FLOW SWITCH (LSH-982)	1/2"	2-#12	STATION FLOOD DETECTION
18	RTU	LOUVER 2	1/2"	3-#12	LOUVER POWER AND CONTROL

CONDUIT AND LOAD DESCRIPTIONS (E-3/C)
SCALE: N.T.S.

4B ENGINEERING & CONSULTING, LLC
3700 RIVER ROAD N, SUITE 2
KEIZER, OREGON 97303
(503) 589-1115

CITY OF WEST LINN
BLAND CIRCLE INTERTIE P.S.
ELECTRICAL DETAILS

PREPARED FOR:
CITY OF WEST LINN
22500 SALAMO ROAD
WEST LINN, OREGON 97068
(503) 657-0331

DESIGN: EDWARD P. BUTTS, P.E.
ROBERT E. BUTTS, D
DRAWN: BROOKE SALTARELLO
DATE: JANUARY 25, 2012
DRAWING:
SCALE: AS SHOWN

REVISIONS:

No.	Date	By
1	JAN 27, 2014	BS

SHEET: E-3

REGISTERED PROFESSIONAL ENGINEER
13,250
OREGON
JULY 17, 1986
EDWARD P. BUTTS

EXPIRES: 12-31-15

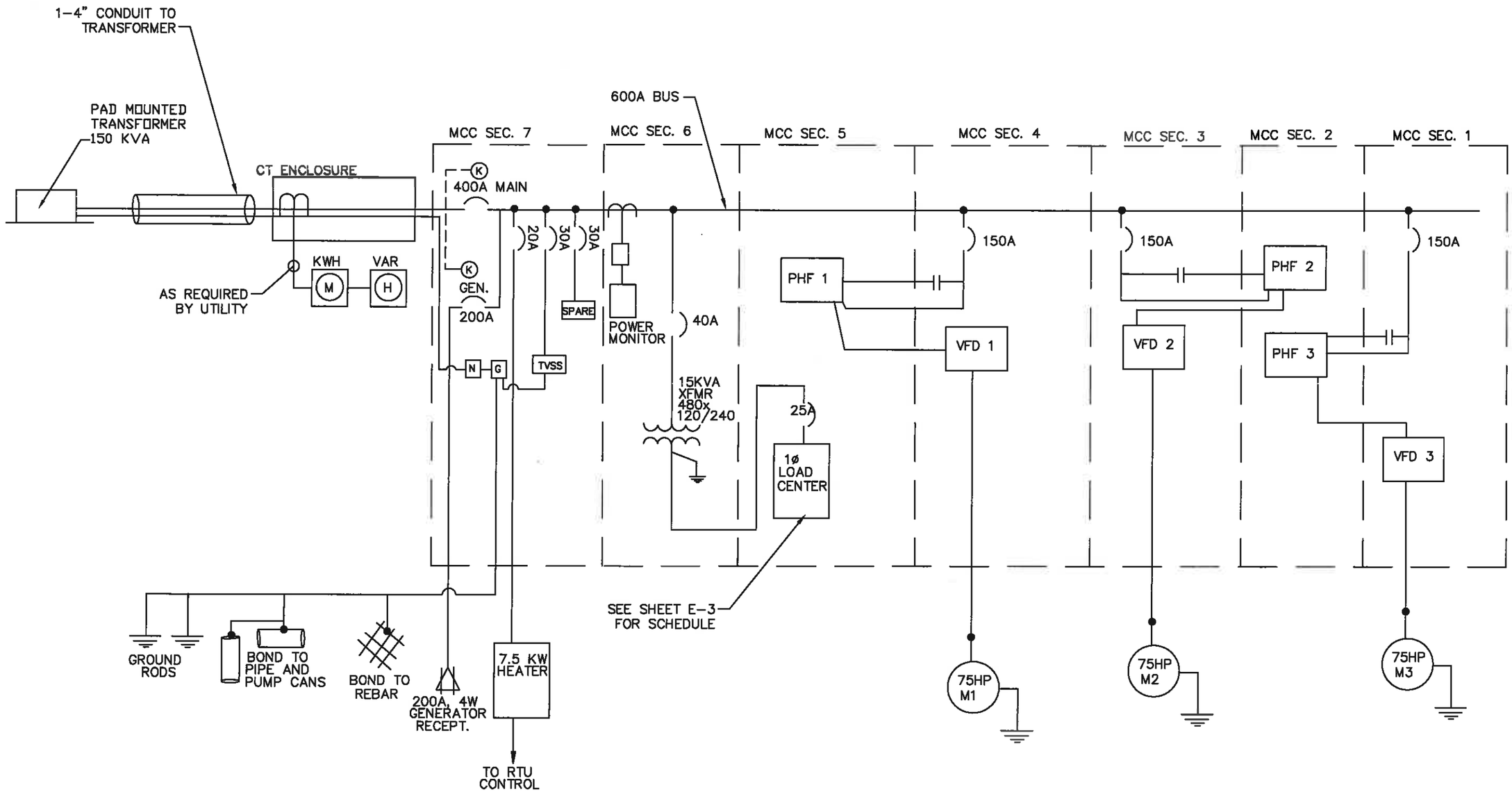

ONE-LINE POWER DIAGRAM: 277/480VAC, 400A, 3 PHASE, 4W; 120/240VAC, 25A, 1 PHASE, 3W

48 ENGINEERING & CONSULTING, LLC
3700 RIVER ROAD N, SUITE 2
KEIZER, OREGON 97303
(503) 589-1115

CITY OF WEST LINN
BLAND CIRCLE INTERTIE P.S.
ONE LINE POWER DIAGRAM

PREPARED FOR:
CITY OF WEST LINN
22500 SALAMO ROAD
WEST LINN, OREGON 97068
(503) 657-0331

DESIGN: EDWARD P. BUTTS P.E.
ADAM E. BUTTS E.I.
DRAWN: BROOKE BALTARELLO
DATE: JANUARY 25, 2012
DRAWING:
SCALE: AS SHOWN

REVISIONS:

No.	Date	By
1	JAN 27, 2014	BS

SHEET: E-4

REGISTERED PROFESSIONAL ENGINEER
13,250
OREGON
JULY 17, 1986
EDWARD P. BUTTS

EXPIRES: 12-31-15

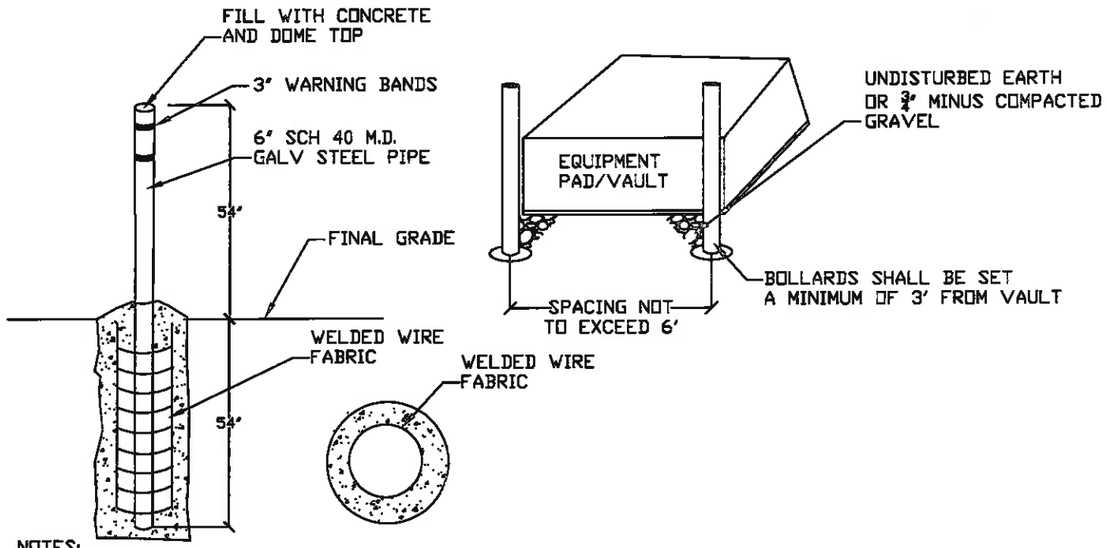

NOTES:

1. PLACE 6" SCHEDULE 40 MD. GALVANIZED STEEL POST FILLED WITH CONCRETE A MAXIMUM OF SIX FEET APART ON ALL SIDES EXPOSED TO VEHICLES.

2. ALL CONCRETE SHALL HAVE A MINIMUM COMPRESSIVE STRENGTH OF 3000 PSI AFTER 28 DAYS.

3. BARRIER POST INSTALLATION SHALL BE IN UNDISTURBED EARTH. HOWEVER, THE AREA BETWEEN THE VAULT WALL AND BARRIER HOLE MAY BE FILLED WITH ¾"-0" MINUS COMPACTED GRAVEL IF THREE FEET OF UNDISTURBED AREA IS NOT AVAILABLE AFTER THE VAULT IS SET.

4. STEEL REINFORCEMENT SHALL BE WELDED WIRE FABRIC (WWF) 6' X 6' GRID OF $\frac{6}{60}$ ROUND, FORMED IN A CAGE AS SHOWN ABOVE. REINFORCEMENT NOT REQUIRED FOR AREAS HAVING ONLY CAR TRAFFIC.

5. POST SHALL BE PAINTED BRIGHT YELLOW. MARK TOP OF POST WITH TWO 3" WARNING BANDS OF CONTRASTING COLORS.

BOLLARD DETAIL FOR ELECTRICAL TRANSFORMER

SCALE: NTS

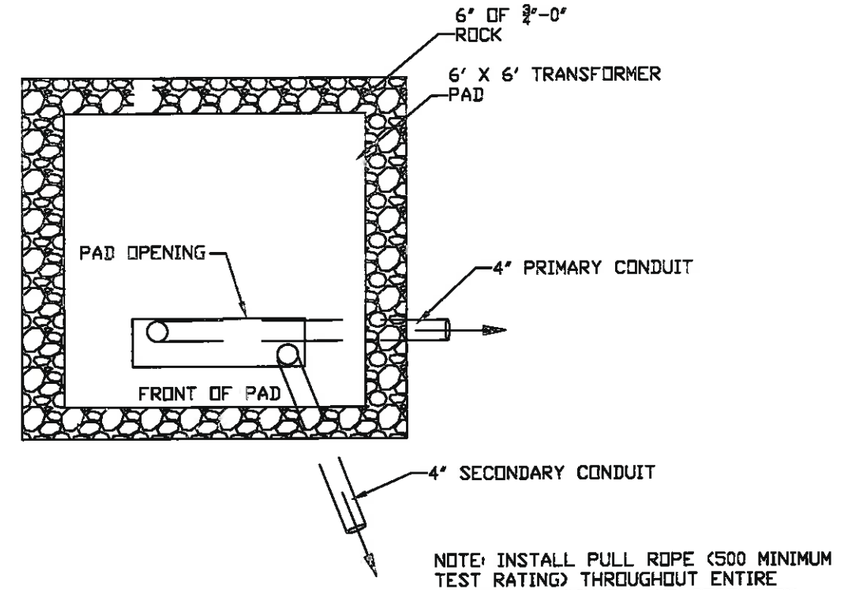

NOTE: INSTALL PULL ROPE (500 MINIMUM TEST RATING) THROUGHOUT ENTIRE LENGTH OF PRIMARY AND SECONDARY CONDUITS.

PAD MOUNT TRANSFORMER DETAIL

SCALE: NTS

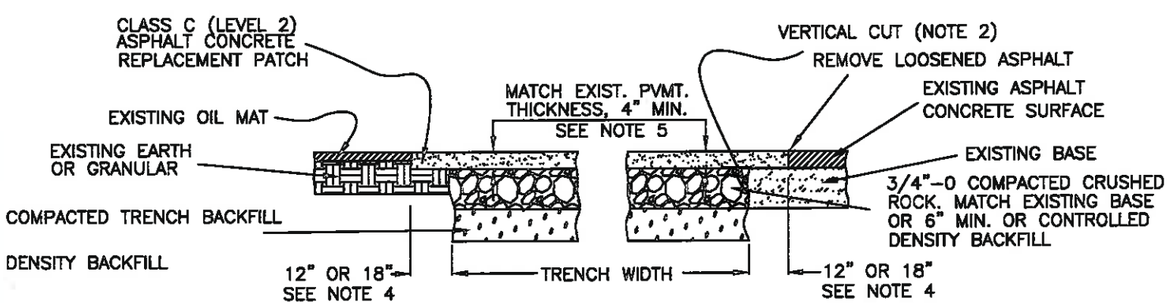

TYPICAL PATCH FOR FLEXIBLE PAVEMENT

NOTES

1. FINAL CUTS IN A.C. PAVEMENT SHALL BE MADE WITH A CONCRETE SAW, MORE THAN ONE CUT MAY BE REQUIRED IN AC PAVEMENTS.

2. CUTS IN P.C.C. PAVEMENT SHALL BE MADE WITH A CONCRETE SAW.

3. 1"-0 CRUSHED AGGREGATE MAY BE SUBSTITUTED FOR 3/4"-0.

4. PAVEMENT REPLACEMENT WIDTH SHALL BE: TRENCH WIDTH PLUS 12 INCHES ON EACH SIDE FOR CONTROLLED DENSITY BACKFILL, AND TRENCH WIDTH PLUS 18 INCHES ON EACH SIDE FOR ROCK BACKFILL.

5. PAVEMENT REPLACEMENT THICKNESS SHALL MATCH EXISTING OR BE AS SHOWN ABOVE FOR ROCK TRENCH BACKFILL.

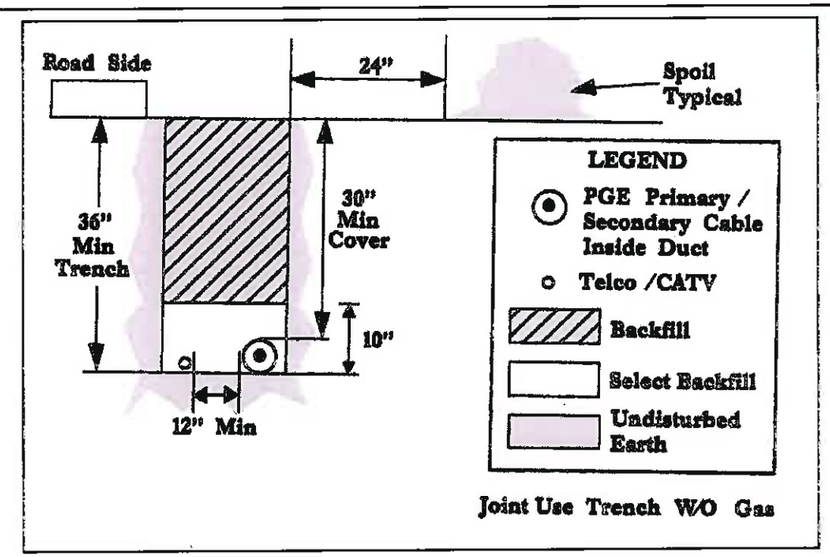

ELECTRICAL TRENCH DETAIL

SCALE: NTS

4B ENGINEERING & CONSULTING, LLC
3700 RIVER ROAD N, SUITE 2
KEIZER, OREGON 97303
(503) 589-1115

CITY OF WEST LINN
BLAND CIRCLE INTERTIE P.S.
ELECTRICAL DETAILS

PREPARED FOR:
CITY OF WEST LINN
22500 SALAMO ROAD
WEST LINN, OREGON 97068
(503) 657-0331

DESIGN: EDWARD P. BUTTS, P.E. / BRIAN E. BUTTS, E.I.
DRAWN: BROOKE BALTASELLO
DATE: JANUARY 27, 2014
DRAWING:
SCALE: AS SHOWN

REVISIONS:

No.	Date	By

SHEET: E-5

REGISTERED PROFESSIONAL ENGINEER
13,250
OREGON
JULY 17, 1986
EDWARD P. BUTTS

EXPIRES: 12-31-15

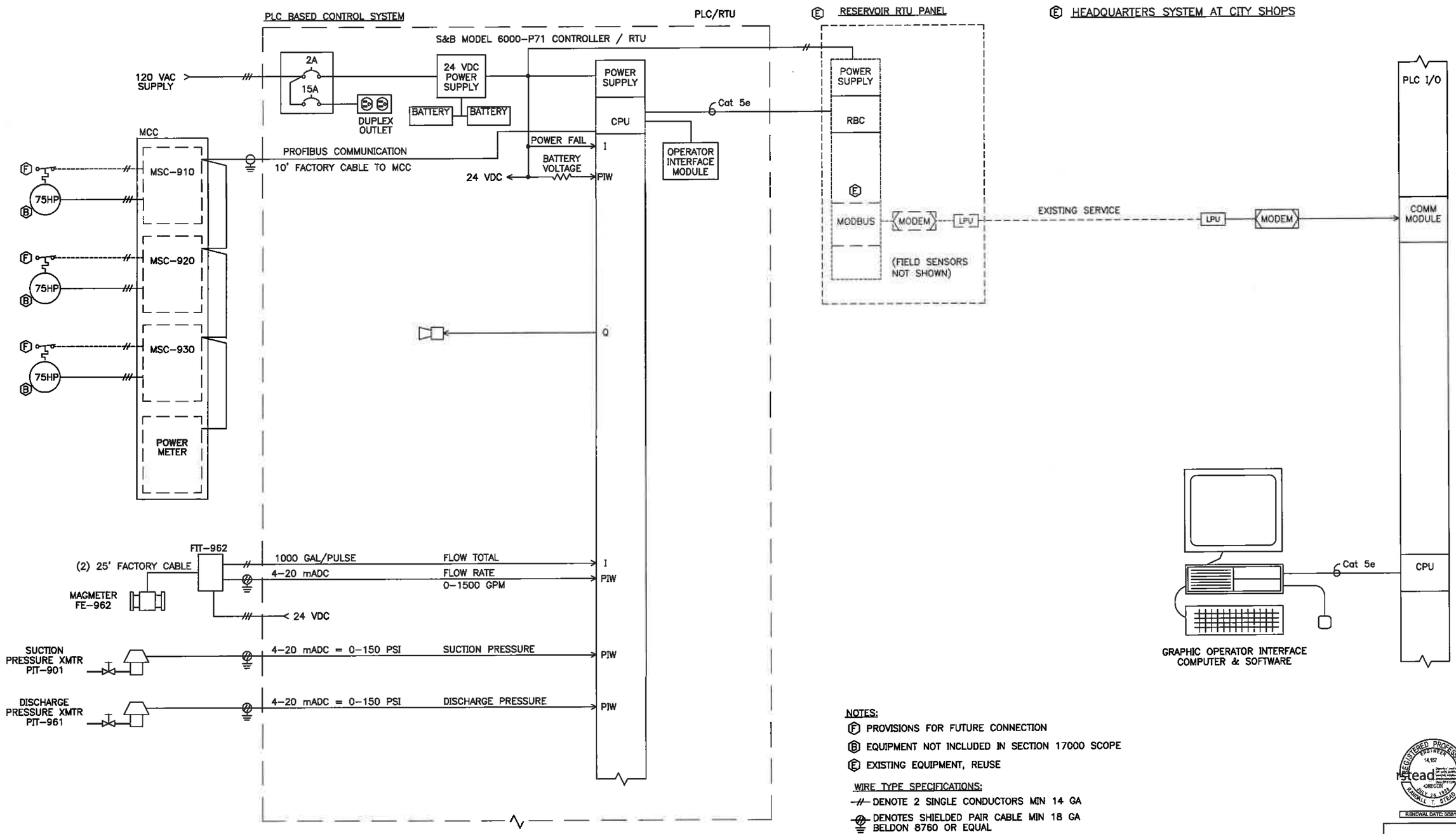

NOTES:

(F) PROVISIONS FOR FUTURE CONNECTION

(B) EQUIPMENT NOT INCLUDED IN SECTION 17000 SCOPE

(E) EXISTING EQUIPMENT, REUSE

WIRE TYPE SPECIFICATIONS:

-//- DENOTE 2 SINGLE CONDUCTORS MIN 14 GA

DENOTES SHIELDED PAIR CABLE MIN 18 GA BELDON 8760 OR EQUAL

REGISTERED PROFESSIONAL ENGINEER 14,157 OREGON JULY 19, 1994 RANDALL T. STEAD

RENEWAL DATE: 6/30/14

PROJECT SHEET: IC - 1

REUSE OF DOCUMENT
This document contains information, ideas and designs proprietary to S&B Inc. This may not be reproduced in any form without written consent of S&B Inc.
Copyright 2013 S&B Inc.

FILE: 12023-012-01
LAST MODIFIED: 12/08/13 1:20 PM

REV.	REVISION DESCRIPTION				APP	DATE
DRWN	RTS	1-24-13	ASMB	ENGR	SCALE	NONE

S&B System Specialists
S&B Inc.
13200 S.E. 30th St.
Bellevue, Washington 98005
(425)644-1700 Fax: (425)746-9312

PROJECT: CITY OF WEST LINN, OR
BLAND CIRCLE BOOSTER STATION

TITLE: BLOCK DIAGRAM PUMPING SYSTEMS

SIZE	JOB NUMBER	KEY	SHEET	REV
D	12023	012	1 OF 7	

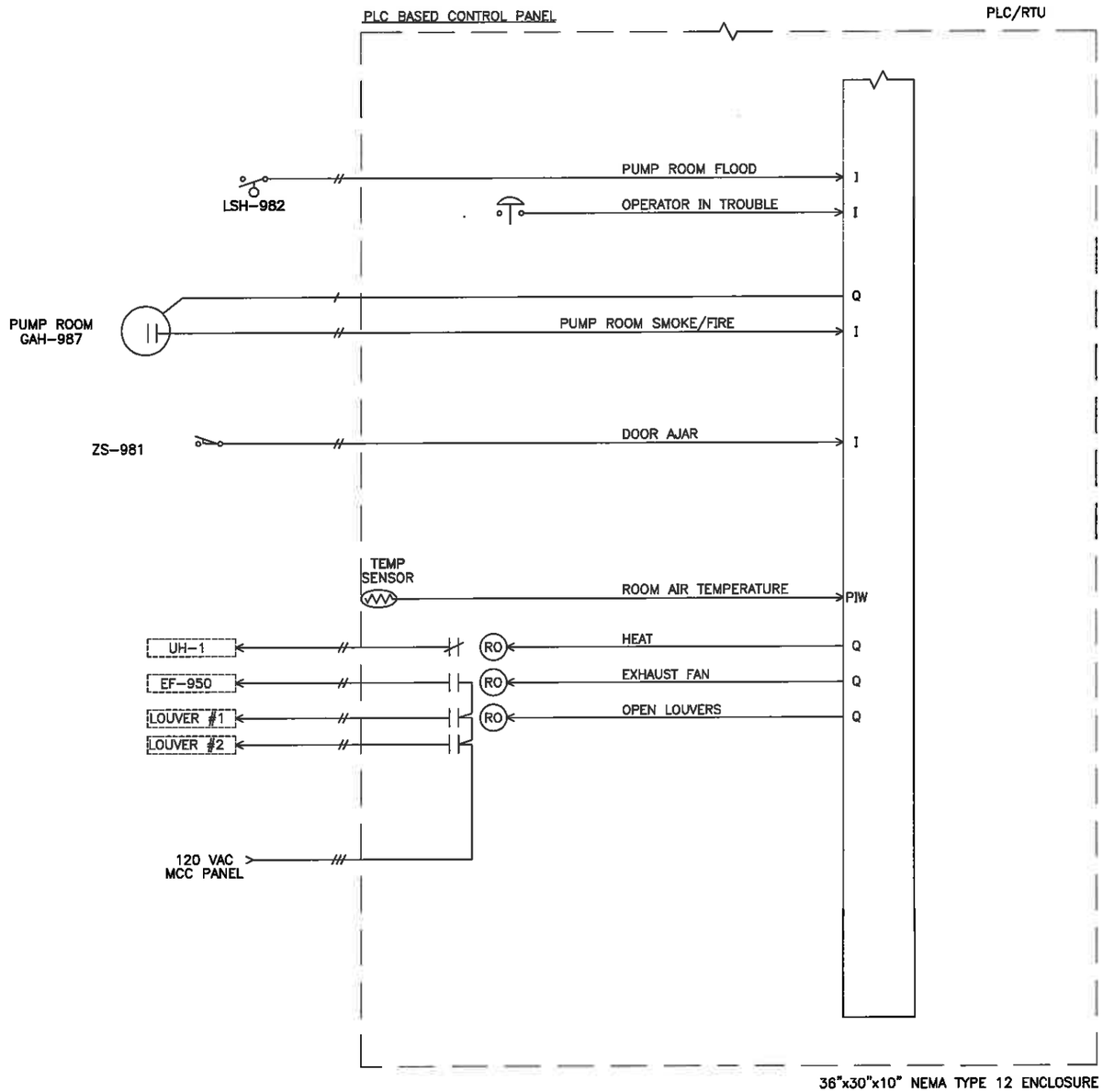

OPERATIONAL FEATURES:

1. PUMP CONTROL AND MONITORING FEATURES: CONTROL PANEL DESIGNED FOR INTERFACE WITH NETWORK CONTROLLED VARIABLE FREQUENCY DRIVE MOTOR STARTERS, WITH MOTOR CONTROL PANEL HOA SWITCH IN AUTO POSITION, RTU CONTROL PANEL WILL COMMAND START AND STOP OF MOTOR / PUMP OPERATION. FAIL LOGIC IN PLC UNIT MONITORS TIME FROM COMMAND TO RUN REPORTBACK CONFIRMATION AND PROVIDES OPERATOR ADJUSTABLE TIME ENTRIES FOR FAIL TO START, FAIL TO STOP AND TOO MANY STARTS. SMART MOTOR CONTROLLERS WILL INCLUDE TRENDS FOR AC POWER INFORMATION FROM THE SIMOCODE MOTOR OVERLOAD DEVICE, PUMP EFFICIENCY AND TRENDING. TRENDING WINDOW INCLUDES 900 SAMPLES / SCREEN RESOLUTION OF AC POWER DATA (kW, VOLTS, AMPS), PUMP DATA (FLOW, DISCHARGE, SUCTION), EFFICIENCY (TDH, FLOW, HP, EFF%). ALARMS ARE DISPLAYED ON OPERATOR INTERFACE MODULE ON PANEL FACE AND TRANSMITTER TO MASTER SCADA SYSTEM.
2. SCADA CONTROL FROM MTU LOCATION, VIA EXISTING RESERVOIR RTU PANEL ADJACENT TO PUMP STATION, ALLOWS FOR OPERATOR TO SELECT LEAD PUMP STATION AND HAVE LEAD PUMP STATION ALTERNATE EACH PUMP CYCLE. PUMP STATIONS INCLUDED IN CYCLE INCLUDE HORTON, VIEW DRIVE AND BLAND CIRCLE.
3. 9" TOUCH PANEL INCLUDES SCREEN DEPICTION FOR STATION OVERVIEW, PUMP OPERATION, ALARM/EVENT, TRENDING WINDOW INCLUDES VALUES RECORDED ON 10 SEC INCREMENTS WITH ONE MONTH OF DATA STORED ONBOARD SD MEMORY CARD. RTU STATUS (VOLTS DC, TEMPERATURE) MONITORED AND TRENDED. FILTER CONTROL OVERVIEW, BACKWASH SUPERVISORY COMMAND AND ALARM STATUS FROM TREATMENT PANEL ARE SHOWN ON WELL ROOM TOUCH PANEL.
4. PRESSURES, FLOWS, AND DESTINATION RESERVOIR LEVEL ARE DISPLAYED AND TRENDED. HIGH AND LOW SETTINGS FOR LEVEL PROVIDE ALARM NOTIFICATION, HIGH-HIGH ALARM ON FLOW DISCHARGE OR LOW-LOW SUCTION INITIATES PUMP SHUTDOWN SEQUENCE. SMOKE AND STATION FLOOD STOP AUTOMATIC CONTROL OF PUMPS AND REQUIRE RESET PRIOR TO SUBSEQUENT OPERATION.
5. FLOW TOTAL IS ACCUMULATED AND ARCHIVED DAILY AT THE MASTER SCADA UNIT.
6. LEASED PHONE LINE FROM CENTURYLINK COMMUNICATIONS FOR DEDICATED SCADA UTILIZATION. CONTRACTOR TO MOVE DEMARC LOCATION FROM EXISTING RESERVOIR RTU TO NEW PUMP STATION. PROVIDE CONDUIT SIZE REQUIRED BY CENTURYLINK, (2" PVC MINIMUM WITH PULL STRING.)
7. RTU BASED ON SIEMENS ET200S FORM FACTOR PLC AND I/O EQUIPMENT. SPACE PROVIDED IN RACK FOR 20% EXPANSION.
8. FIELD SENSORS ARE INCLUDED IN THE SCOPE OF WORK UNLESS LABELED WITH A 'B' FOR "EQUIPMENT NOT INCLUDED IN SECTION 17000 SCOPE". EQUIPMENT MARKED FUTURE IS NOT INCLUDED IN SCOPE OF DELIVERY OR PRICING.
9. PUMPS START AND STOP BASED ON RESERVOIR LEVEL AND SPEED CONTROLLED TO MAINTAIN SUCTION AND DISCHARGE PRESSURES WITHIN OPERATOR SELECTED BANDWIDTH. CONTROL REVERTS TO PRESSURE CONTROL AT TIME OF LOSS OF COMMUNICATION WITH MASTER SCADA SYSTEM.
10. RTU SENSED AIR TEMPERATURE USED FOR OCCUPIED / UNOCCUPIED CONTROL OF HEATING UNITS. TEMPERATURE SETPOINTS FOR OCCUPIED / UNOCCUPIED ARE PROVIDED FOR OPERATOR ENTRY VIA TOUCH PANEL. UNOCCUPIED TEMPERATURE SETPOINT ADJUSTED FOR FREEZE PROTECTION, INITIALLY SET FOR 40degF. OCCUPIED TIME PERIOD DEFINED BY INTRUSION SYSTEM IN DISARMED STATUS. RTU LOGIC ALLOWS FOR OPERATOR TO REQUEST OCCUPIED TEMPERATURE SETPOINT FROM MASTER TELEMETRY UNIT TO BRING STATION UP TO TEMPERATURE PRIOR TO THE OPERATOR ARRIVING. RTU RETURNS TO UNOCCUPIED TEMPERATURE SETPOINT ONE HOUR AFTER RECEIVING COMMAND OR FOLLOWING TRANSITION COMMAND FROM INTRUSION STATUS. RTU PROVIDES HIGH AND LOW ROOM TEMPERATURE ALARMS TO MTU FOR OPERATOR RESPONSE.
11. STATION LOUVERS OPEN UPON RISING TEMPERATURE WHEN PUMP IS RUNNING. LOUVERS ALSO OPEN WHEN INTERIOR TEMPERATURE RISES ABOVE SETTING AND CLOSE WHEN TEMPERATURE BELOW CLOSE SETPOINT.
12. STATION EXHAUST FAN STARTS ON RISING TEMPERATURE AND STOPS ON LOW TEMPERATURE OR AFTER MINIMUM RUNTIME AFTER PUMP STOPS AND TEMPERATURE BELOW START SETPOINT. LOUVERS ARE OPEN WHEN EXHAUST FAN IS IN OPERATION. EXHAUST FAN CONTACTOR IN RTU IS RATED FOR 1/2HP LOAD.

REGISTERED PROFESSIONAL ENGINEER 14,157 OREGON JULY 26, 1994 RANDALL T. STEAD
RENEWAL DATE: 6/30/14

PROJECT SHEET:
IC – 2

REUSE OF DOCUMENT
This document contains information, ideas and designs proprietary to S&B Inc. This may not be reproduced in any form without written consent of S&B Inc.
Copyright 2013 S&B Inc.

FILE: 12023-012-02
LAST MODIFIED: 12/08/13 1:20 PM

REV.	REVISION DESCRIPTION					APP	DATE
DRWN	RTS	1-24-13	ASMB		ENGR	RTS	11-14-13

SCALE NONE

S&B System Specialists
13200 S.E. 30th St.
Bellevue, Washington 98005
S&B Inc. (425)644-1700 Fax: (425)746-9312

PROJECT
CITY OF WEST LINN, OR
BLAND CIRCLE BOOSTER STATION

TITLE
BLOCK DIAGRAM
ANCILLARY SYSTEMS

DRAWING NUMBER

SIZE	JOB NUMBER	KEY	SHEET	REV
D	12023	012	2 OF 7	

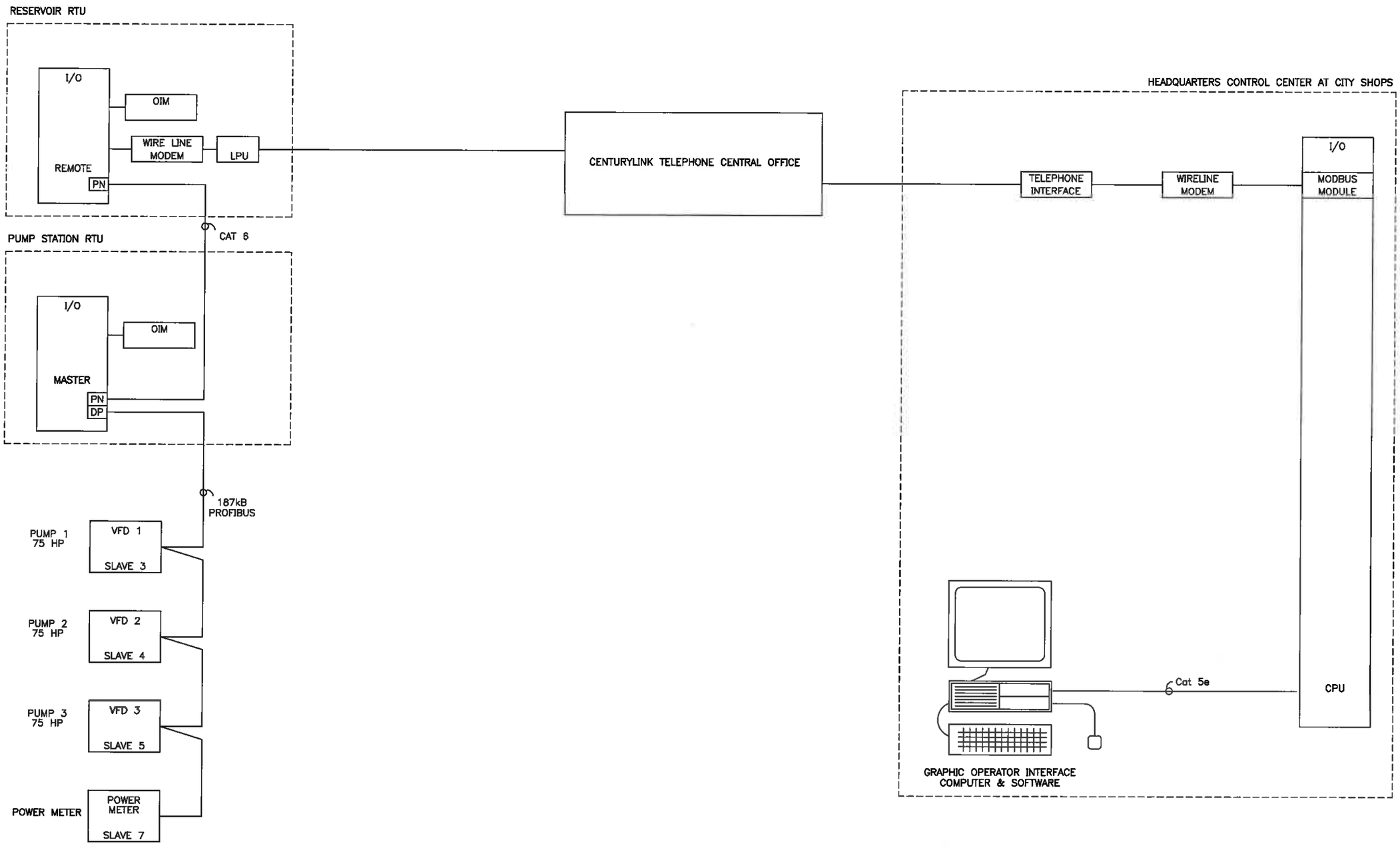

REGISTERED PROFESSIONAL ENGINEER
rstead
RANDALL T. STEAD
OREGON
JULY 26, 1994
RENEWAL DATE: 6/30/14

PROJECT SHEET:
IC – 3

REUSE OF DOCUMENT	REV.	REVISION DESCRIPTION					APP	DATE
This document contains information, ideas and designs proprietary to S&B Inc. This may not be reproduced in any form without written consent of S&B Inc. Copyright 2013 S&B Inc.	DRWN	RTS	1-24-13	ASMB		ENGR		SCALE NONE
FILE: 12023-012-03	S&B System Specialists, S&B Inc. 13200 S.E. 30th St. Bellevue, Washington 98005 (425)644-1700 Fax: (425)746-9312					PROJECT: CITY OF WEST LINN, OR BLAND CIRCLE BOOSTER STATION		
LAST MODIFIED: 12/08/13 1:25 PM	TITLE: NETWORK DIAGRAM LOCAL AND WIDE AREA CONNECTIONS					DRAWING NUMBER		
						D	12023	012	3 OF 7
						SIZE	JOB NUMBER	KEY	SHEET	REV

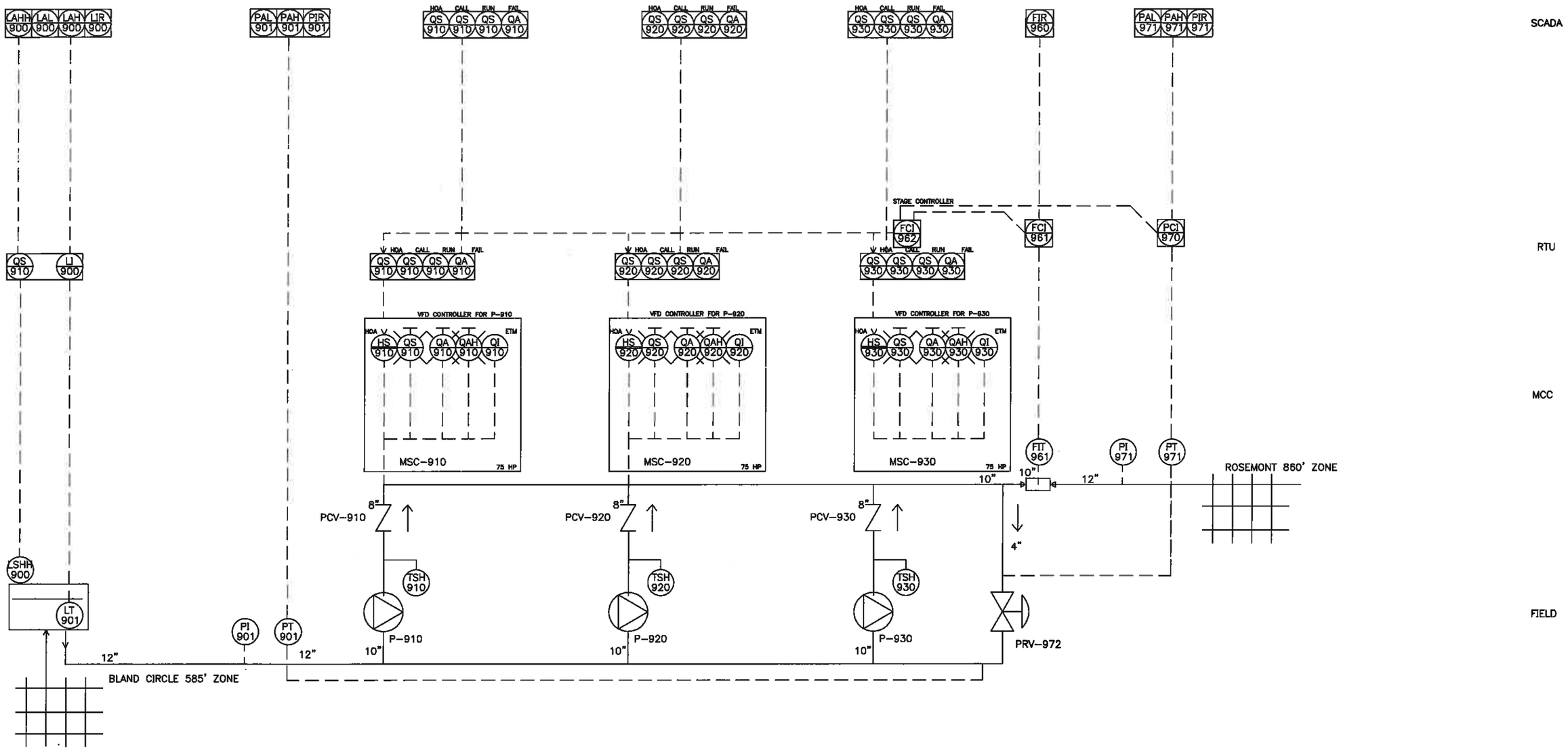

ASH	ALARM SWITCH HIGH
ASHH	ALARM SWITCH HIGH HIGH
HS	HAND SWITCH
LAHH	LEVEL ALARM HIGH HIGH
LCR	LEVEL CONTROL RECORDER
LIC	LEVEL INDICATOR CONTROLLER
LIR	LEVEL INDICATOR RECORDER
LSHH	LEVEL SWITCH HIGH HIGH
LT	LEVEL TRANSMITTER
MSC	MOTOR STARTER CONTROL
PAL	PRESSURE ALARM LOW
PAH	PRESSURE ALARM HIGH
PI	PRESSURE INDICATION
QA	QUANTITY AMP
QAH	QUANTITY ALARM
QI	QUANITY INDICATOR
QS	QUANTITY STATUS
SV	SOLENOID SWITCH
TSH	TEMPERATURE SWITCH HIGH
ZS	POSITION SWITCH

IN COMPUTER

AUXILLARY PANEL

LIGHT

FRONT OF PANEL

REGISTERED PROFESSIONAL ENGINEER 14 187 OREGON JULY 28, 1983 RANDALL T. STEAD
RENEWAL DATE: 6/30/14

PROJECT SHEET:
IC – 4

REUSE OF DOCUMENT
This document contains information, ideas and designs proprietary to S&B Inc. This may not be reproduced in any form without written consent of S&B Inc.
Copyright 2013 S&B Inc.

FILE: 12023-12-04
LAST MODIFIED: 11/14/13 9:50 AM

REV.	REVISION DESCRIPTION					APP	DATE
DRWN	RTS	10-5-11	ASMB		ENGR	RTS	11-14-13

SCALE NONE

S&B System Specialists
13200 S.E. 30th St.
Bellevue, Washington 98005
S&B Inc. (425)644-1700 Fax: (425)746-9312

PROJECT
CITY OF WEST LINN, OR
BLAND CIRCLE BOOSTER STATION

TITLE
P&ID
PROCESS CONTROLS

DRAWING NUMBER

SIZE	JOB NUMBER	KEY	SHEET	REV
D	12023	012	4 OF 7	

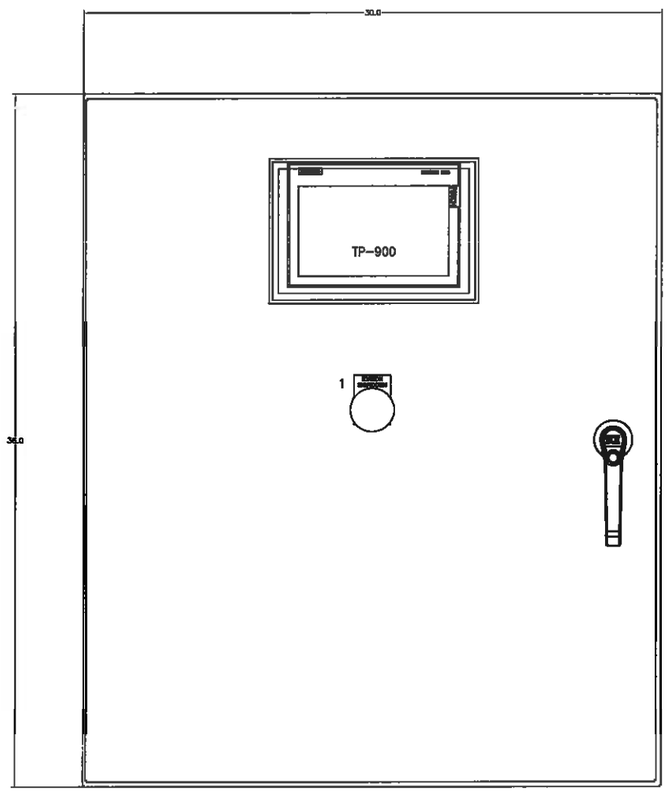

SAGINAW SBA3-36EL3010LP TYPE 12 ENCLOSURE
(INCLUDES 3 PT LATCH KIT AND HANDLE)
SAGINAW SCE-36P30 BACK PANEL

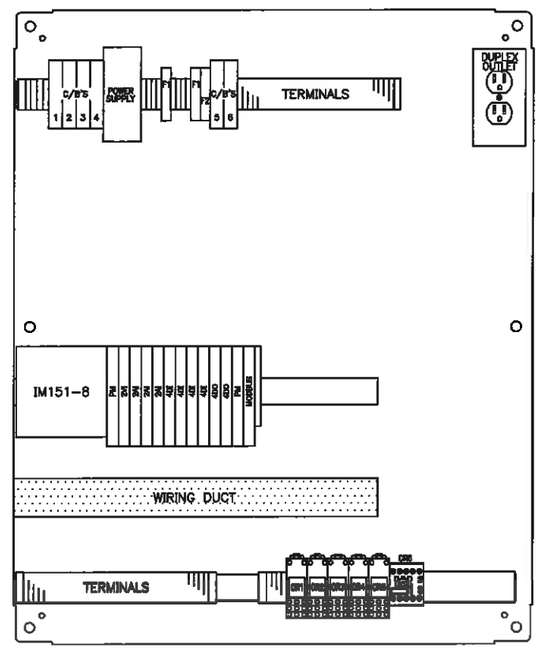

BACK PANEL LAYOUT

NAMEPLATE

1 STATION SHUTDOWN

REGISTERED PROFESSIONAL ENGINEER 14,157 OREGON JULY 28, 1995 RANDALL T. STEAD
rstead
RENEWAL DATE: 6/30/14

PROJECT SHEET:
IC – 5

REUSE OF DOCUMENT
This document contains information, ideas and designs proprietary to S&B inc. This may not be reproduced in any form without written consent of S&B inc.
Copyright 2013 S&B inc.

FILE: 12023-012-05
LAST MODIFIED: 12/08/13 1:28 PM

REV.	REVISION DESCRIPTION					APP	DATE
DRWN	RTS	1-24-13	ASMB		ENGR		SCALE NONE

S&B System Specialists
13200 S.E. 30th St.
Bellevue, Washington 98005
S&B inc. (425)644-1700 Fax: (425)746-9312

PROJECT
CITY OF WEST LINN, OR
BLAND CIRCLE BOOSTER STATION

TITLE
PRESENTATION
REMOTE TELEMETRY UNIT

DRAWING NUMBER				
D	12023	012	5 OF 7	
SIZE	JOB NUMBER	KEY	SHEET	REV

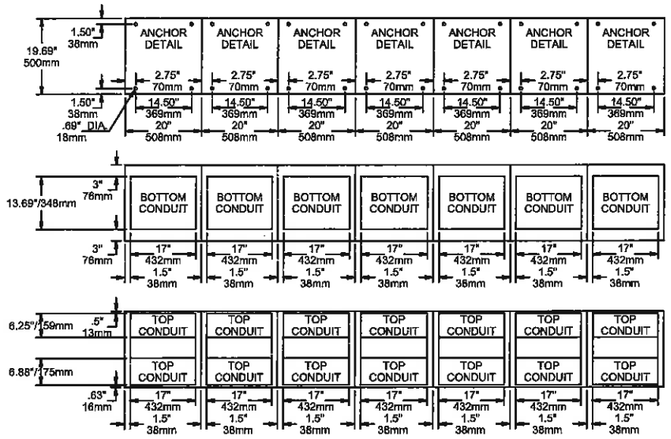

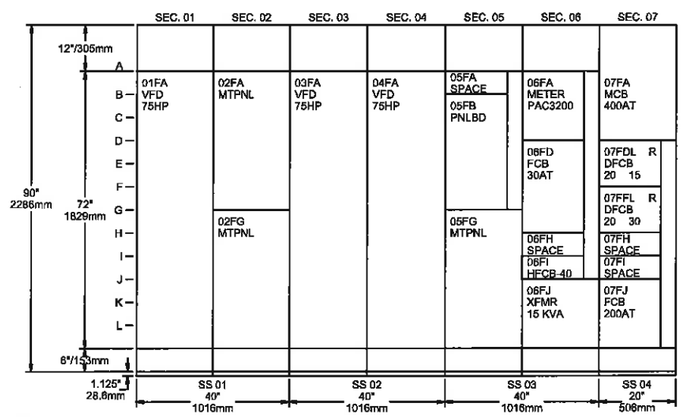

	SEC. 01	SEC. 02	SEC. 03	SEC. 04	SEC. 05	SEC. 06	SEC. 07
CUSTOMER SECT. ID							
DEPTH (in/mm)	20/508	20/508	20/508	20/508	20/508	20/508	20/508
WIDTH (in/mm)	20/508	20/508	20/508	20/508	20/508	20/508	20/508
HORIZONTAL BUS	YES	YES	YES	YES	YES	YES	YES
VERTICAL BUS TYPE	NONE	NONE	NONE	NONE	300A FRONT	300A FRONT	600A FRONT
VB BARRIERS	-	-	-	-	ISOLATED	ISOLATED	ISOLATED
VB SHUTTERS	-	-	-	-	-	-	-
THERMOSTAT	NO	YES	NO	YES	NO	YES	YES
DOUBLE DEEP BUS-THRU	-	-	-	-	-	-	-
THERMOSTAT	-	YES	-	YES	-	YES	YES

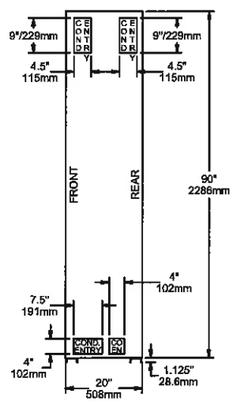

LIGHTING PANEL IN MCC SECTION 05FB

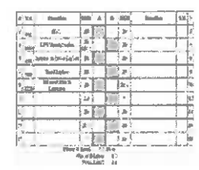

GENERAL	
SERVICE	480Y/277 3Ø4W AC
SYSTEM GROUNDING	SOLIDLY GROUNDED
FREQUENCY	60 HZ
AVAIL FAULT CURR	42K AIC SYM
SERVICE ENTRANCE	YES
MCC TYPE	TIASTAR
LABELS	
UL	ALL UNITS/SECTIONS
CSA	WAIVED
REGIONAL CODES	-
ALTITUDE RATINGS	UP TO 3000FT / 915M
CUST INSPECT REQD	NONE
CERTIFIED TEST RPTS	-
GENERAL NOTES	-
	-
	-
	P6
	-
SHOP NOTES	-
	-
	-
	-
	-

BUS	
BRACING	42K AIC SYM
BUS RATING	-
HORIZONTAL BUS	-
RATING	800A (3/16 X 2)
MATERIAL	COPPER
TEMP RATING	65 DEGREES C
PLATING	TIN
BARRIERS	STANDARD LEXAN
INSULATION	-
VERTICAL BUS	
RATING	SEE SECTION DETAILS
MATERIAL	COPPER
PLATING	TIN
STAB PLATING	TIN
NEUTRAL BUS	
RATING	600A
MATERIAL	COPPER
PLATING	TIN
LOCATION	INCOMING SECTION ONLY
LUGS	(2) 4-350 KCMIL
HORIZONTAL GROUND BUS	
RATING	300A (1/4 X 1)
MATERIAL	COPPER
PLATING	UNPLATED
LOCATION	FRONT BOTTOM
LUGS	(1) 6-300 KCMIL
LUG PAD	-
VERTICAL GROUND BUS	
RATING	-
MATERIAL	-
PLATING	-
MOTOR GND TERMINALS	-

STRUCTURE	
NEMA TYPE	1A
EXTERNAL	-
HEIGHT	91.125" / 2315MM
DEPTH	20" / 508M/M FRT ONLY
PAINT	GRAY ANSI 61
GENERAL OPTIONS	-
FISH-TAPE BARRIERS	-
REMOV BOT PLATES	-
BASE CHANNELS	-
SEISMIC	IBC LEVEL 4
TWO-PC BACKPLATE	-
FUNGUS PROOFING	-
SPACE HEATERS	
SIZE	120V 150W
POWER SOURCE	EXTERNAL
BARRIER	-
THERMOSTAT	SEE SECTION DETAILS
SPECIAL DIAGRAMS	-
INTERCONNECTION	-
COMMUNICATION	-
SPACE HEATER	-
LIGHT/SWITCH/RECEP	-
VENTILATION	-
MISC 1	-
MISC 2	-
MISC 3	-

UNITS	
MIN WITHSTAND RATINGS	
CB COMBINATION	42K AIC SYM
CB FEEDER	42K AIC SYM
FUSIBLE COMBINATION	-
FUSIBLE FEEDER	-
WIRING CLASS	I
TYPE	BD (CTRL TERM BLKS)
CTRL TERM BLOCKS	PULL-APART
EXTRA UNUSED PTS	-
POWER TERM BLOCKS	NOT APPLICABLE
CONTROL WIRE	16 AWG MTW
POWER WIRE	STANDARD
CONTROL TERMINALS	-
POWER TERMINALS	-
WIRE MARKERS	CONTROL ONLY
TYPE	HEAT SHRINK
GENERAL OPTIONS	NONE
UNIT DIAG ON DOOR	-
HEATER TBLS ON DOOR	-
UNIT SIDE BARRIER	-

NAMEPLATES	
UNIT	STANDARD
COLOR (FACE/TEXT)	BLACK/WHITE
TEXT SIZE	3/16
TEXT	SEE NAMEPLATE INFO
ATTACHMENT	STAINLESS SCREWS
COMPONENT	-
MASTER	
COLOR (FACE/TEXT)	-
TEXT SIZE	-
SECTION	
COLOR (FACE/TEXT)	-
TEXT SIZE	-
TEXT	-

INCOMING	
MAIN ENTRY TYPE	CABLE ENTRY UNIT
LOCATION	TOP
SECTION	07
UNIT	07FA
INCOMING CABLES	(2)500 KCMIL
-	-
-	-

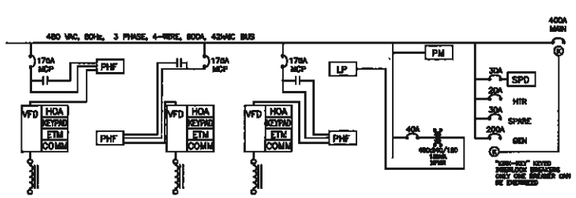

480VAC 3 phase	HP Load	kVA Load	FLA	locked rotor	Breaker	conductor size
PUMP 1	75 HP		96	600	175	#1 SYM. SHIELDED
PUMP 2	75 HP		96	600	175	#1 SYM. SHIELDED
PUMP 3	75 HP		96	600	175	#1 SYM. SHIELDED
Low Volt Panel		15.0 kVA	19		40	8
Heater		7.5 kVA	9		15	12
			330		400	600 MCM
Max Load:		274 kVA				
Demand Load:		294 kVA	354 AMP			

240/120 VAC	kVA
RTU	0.50
120Vac Receptacles	1.08
Interior & Door Lights	0.48
Yard Lights	0.50
Exhaust Fan and louvers	1.23
Design kVA Load	3.8

REGISTERED PROFESSIONAL ENGINEER 14,157 OREGON JULY 28, 1998 RANDALL T. STEAD

RENEWAL DATE: 6/30/14

PROJECT SHEET: IC – 6

REUSE OF DOCUMENT
This document contains information, ideas and designs proprietary to S&B Inc. This may not be reproduced in any form without written consent of S&B Inc.
Copyright 2013 S&B Inc.

FILE: 12023-12-06
LAST MODIFIED: 11/14/13 2:42 PM

REV.	REVISION DESCRIPTION				APP	DATE
DRWN	RTS	1-24-13	ASMB	ENGR RTS	11-14-13	SCALE NONE

S&B System Specialists
S&B Inc.
13200 S.E. 30th St.
Bellevue, Washington 98005
(425)644-1700 Fax: (425)746-9312

PROJECT: CITY OF WEST LINN, OR
BLAND CIRCLE BOOSTER STATION

TITLE: MOTOR CONTROL CENTER PRESENTATION AND ONE LINE REPRESENTATION

DRAWING NUMBER				
SIZE	JOB NUMBER	KEY	SHEET	REV
D	12023	012	6 OF 7	

ELEMENTARY DIAGRAM – VFD PUMP UNIT

DOOR MOUNTED DEVICES

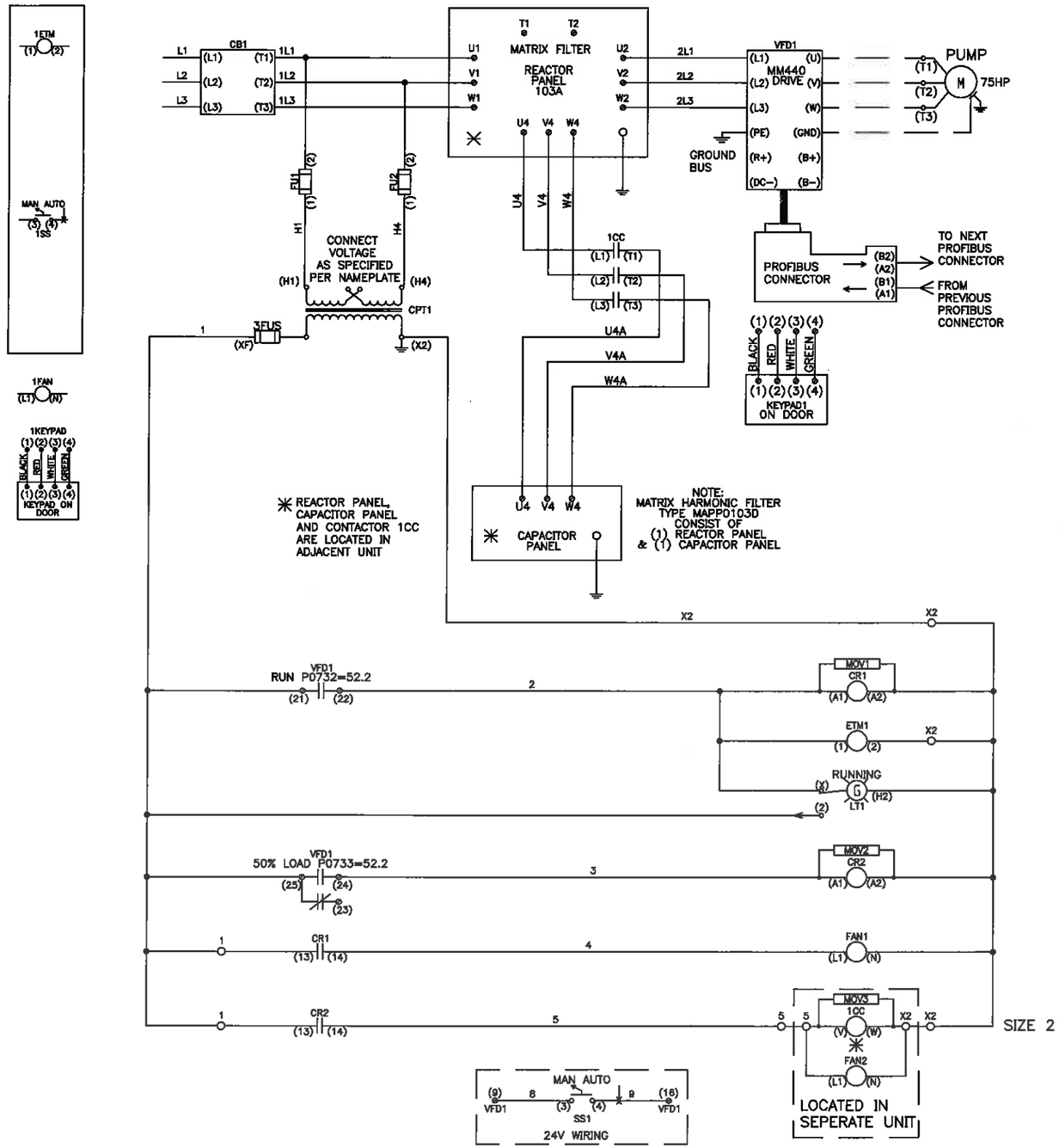

PROJECT SHEET:
IC – 7

REUSE OF DOCUMENT	REV.	REVISION DESCRIPTION			APP	DATE
This document contains information, ideas and designs proprietary to S&B inc. This may not be reproduced in any form without written consent of S&B inc. Copyright 2013 S&B Inc.	DRWN	RTS 2-11-13 ASMB	ENGR	RTS 11-14-13	SCALE	NONE
FILE: 12023-12-07	S&B System Specialists, S&B inc. 13200 S.E. 30th St. Bellevue, Washington 98005 (425)644-1700 Fax: (425)746-9312	PROJECT: CITY OF WEST LINN, OR BLAND CIRCLE BOOSTER STATION				
LAST MODIFIED: 11/14/13 2:43 PM	TITLE: WIRING DIAGRAM MOTOR CONTROL LOGIC	DRAWING NUMBER				
		SIZE: D	JOB NUMBER: 12023	KEY: 012	SHEET: 7 OF 7	REV

REGISTERED PROFESSIONAL ENGINEER 14,157 OREGON JULY 24 1985 RANDALL T. STEAD
RENEWAL DATE: 6/30/14