6TH AVENUE PARTITION

CITY FILE MAP MP 14-03

GENERAL NOTES:

1. ALL WORK AND MATERIALS TO BE IN ACCORDANCE WITH THE CITY OF WEST LINN EXISTING STANDARDS, THE APWA (OREGON CHAPTER) STANDARD SPECIFICATION AND DRAWINGS (1990, WITH 1992 & 1996 AMENDMENTS), THE STATE OF OREGON PLUMBING CODE, THE OREGON DEPARTMENT OF ENVIRONMENTAL QUALITY (DEQ), THE OREGON DEPARTMENT OF HUMAN RESOURCES, AND AS APPROVED AND NOTED ON THESE DRAWINGS.
2. CONTRACTOR TO OBTAIN ALL REQUIRED PERMITS AND LICENSES BEFORE STARTING CONSTRUCTION.
3. CONTRACTOR TO VERIFY ALL UTILITY LOCATIONS PRIOR TO CONSTRUCTION AND SHALL ARRANGE FOR THE RELOCATION OF ANY IN CONFLICT WITH THE PROPOSED CONSTRUCTION.
4. EXISTING UTILITY LOCATIONS SHOWN ARE APPROXIMATE ONLY AND MUST BE VERIFIED BY THE CONTRACTOR, ADDITIONAL UNDERGROUND UTILITIES MAY EXIST.
5. ANY DISCREPANCIES BETWEEN THE CONSTRUCTION DRAWINGS AND THE ACTUAL SITE CONDITIONS SHALL BE REPORTED TO THE ENGINEER AS SOON AS THEY BECOME APPARENT.
6. CONTRACTOR SHALL BE RESPONSIBLE FOR RESTORATION OF ALL DAMAGE OR DESTRUCTION OF PROPERTY, MONUMENTATION OR CONSTRUCTION STAKES.
7. THE ENGINEER HAS NOT BEEN RETAINED OR COMPENSATED TO PROVIDE DESIGN AND CONSTRUCTION REVIEW SERVICES RELATING TO THE CONTRACTOR'S SAFETY PRECAUTIONS OR TO MEANS, METHODS, TECHNIQUES, SEQUENCES FOR PROCEDURES REQUIRED FOR THE CONTRACTOR TO PERFORM HIS/HER WORK.
8. ALL UTILITY TRENCHES WITHIN EXISTING OR PROPOSED RIGHT-OF-WAY'S SHALL BE BACKFILLED WITH 3/4"-0" GRANULAR BACKFILL PER CITY OF WEST LINN STANDARD SPECIFICATIONS SECTION 204.02.06 AND COMPACTED PER SECTION 204.03.13.
9. CONTRACTOR SHALL PREPARE AND SUBMIT A TRAFFIC CONTROL PLAN AND RECEIVE APPROVAL PRIOR TO WORKING WITHIN THE PUBLIC RIGHT-OF-WAY.
10. EROSION CONTROL MEASURES SHALL BE INSTALLED IN ACCORDANCE WITH THE CLACKAMAS COUNTY EROSION MANUAL.

STREET CONSTRUCTION AND PAVING:

1. ALL WORK AND MATERIALS SHALL CONFORM WITH EXISTING CITY OF WEST LINN STANDARDS.
2. CONTRACTOR SHALL REMOVE AND DISPOSE OF TREE, STUMPS, ROOTS, BRUSH, AND OTHER ORGANIC MATERIAL IN THE WORK AREA AND WHERE INDICTED ON THE PLANS. THESE MATERIALS SHALL BE DISPOSED OF OFF SITE IN SUCH A MANNER AS TO MEET LOCAL REGULATIONS.
3. CONTRACTOR SHALL PROVIDE THE NECESSARY EROSION PROTECTION, TO INCLUDE GRADING, DITCHING, STRAW OR HAY BALES, AND SILT FENCING TO MINIMIZE EROSION ONTO ADJACENT PROPERTIES.
4. THE STREET SECTION SHALL BE GRADED TO THE ELEVATIONS SHOWN ON THE DRAWINGS WITH THE NECESSARY ADJUSTMENTS TO ACCOMMODATE THE FINISH PAVEMENT AS SPECIFIED.
5. MATERIAL IN SOFT SPOTS WITHIN THE PAVED AREAS SHALL BE REMOVED TO THE DEPTH REQUIRED TO PROVIDE A FIRM FOUNDATION AND SHALL BE REPLACED WITH PIT RUN CRUSHED ROCK (6" MAXIMUM) OVER FABRIC. THE SUB-GRADE SHALL BE "PROOF ROLLED", WITNESSED BY THE ENGINEER AND THE CITY PRIOR TO PLACEMENT OF THE BASE ROCK. COMPACTION TESTING SHALL CONFORM TO THE CITY OF WEST LINN STANDARD SPECIFICATIONS, SECTION 501.03.08. ASPHALT SHALL HAVE A MINIMUM DENSITY OF 92%. TESTING WILL BE BY AN INDEPENDENT LABORATORY WITH RESULTS TO THE CITY AND DESIGN ENGINEER. FINISH BASE ROCK SHALL BE "PROOF ROLLED" WITNESSED BY THE ENGINEER AND CITY PRIOR TO PLACEMENT OF THE ASPHALT.
6. THE CONTRACTOR TO NOTIFY CITY OF WEST LINN AND ENGINEER, 24-HOURS PRIOR TO STARRING CONSTRUCTION OR WORK TO BE ACCEPTED BY THE CITY.
7. ASPHALT CONCRETE PAVEMENT TO BE FROM A MIX DESIGN APPROVED BY THE OREGON DEPARTMENT OF TRANSPORTATION. CONTRACTOR TO PROVIDE DENSITY TESTING RESULTS FOR ASPHALTIC CONCRETE PLACED IN PUBIC STREETS. SMOOTHNESS TESTING IS REQUIRED PER THE CITY OF WEST LINN STANDARD SPECIFICATION SECTION 209.03.04D.
8. CONSTRUCT CURB AND GUTTER USING 3300 PSI CONCRETE MEETING THE SPECIFICATIONS OF W.L.S.C.S. DIVISION 205 (AFTER 28DAYS) WITH A MAXIMUM 1½" AGGREGATE SIZE. A PROOF ROLL OF THE CURB LINES IS REQUIRED PRIOR TO PLACING CURBS. PLACE CONTRACTION JOINTS AT 15' MAXIMUM ON CENTERS. CONTACTOR SHALL STAMP LOCATION OF SEWER, STORM AND WATER CROSSINGS WITH AN (S), (ST), OR (W).

STORM SEWER:

1. ALL WORK AND MATERIALS USED FOR PUBLIC IMPROVEMENT TO CONFORM TO THE REQUIREMENTS OF THE CITY OF WEST LINN PUBLIC WORKS STANDARDS.
2. ALL WORK AND MATERIALS FOR PRIVATE STORM DRAINS TO MEET REQUIREMENTS OF THE STATE OF OREGON PLUMBING CODE.
3. MATERIALS
   - A. POLYVINYCHLORIDE PIPE (PVC) SHALL CONFORM TO THE REQUIREMENTS OF ASTM D 3034 SDR 35 (6 INCHES OR LESS)
   - B. RIBBED PVC PIPE TO CONFORM WITH ASTM F-794
   - C. DUCTILE IRON PIPE (DI) SHALL BE CLASS 150, CEMENT-MORTAR LINED PUSH-ON JOINT PIPE MEETING THE LATEST REVISIONS TO ANSI SPECIFICATIONS A 21.4/AWWA C-104.
4. PIPE BEDDING AND TRENCH BACKFILL WITHIN PAVED AREAS TO BE ¾"-0" CRUSHED ROCK, PIPE BEDDING AND BACKFILL TO EXTEND A MINIMUM OF 6" BELOW PIPE AND 9" ALONG SIDES AND 12" ABOVE.
5. ALL MANHOLES OUTSIDE THE STREET RIGHT-OF-WAY SHALL HAVE TAMPER PROOF LIDS AND SHALL BE 12": ABOVE THE FINISHED GRADE IF NOT IN PAVED AREA.
6. ALL STORM LINES SHALL BE MANDREL TESTED AND VIDEO ACCEPTANCE INSPECTION TO BE COMPLETED BY THE CONTRACTOR.
7. ALL PIPE SHALL HAVE RUBBER GASKET JOINTS PER ASTM F477.
8. ALL CONNECTIONS TO MANHOLES AND CATCH BASIN/INLETS SHALL BE PRECAST OR CORE DRILLED HOLES.
9. INSTALL CONTINUOUS INSULATED COPPER TRACER WIRE AS REQUIRED BY THE UPC AND CITY STANDARDS.

SANITARY SEWER:

1. ALL WORK AND MATERIALS TO CONFORM WITH THE CITY OF WEST LINN STANDARDS (1990-APWA OEGON CHAPTER STANDARD SPECIFICATIONS AND DRAWINGS WITH 1992 AND 1996 AMENDMENTS) AND THE DEQ FOR ALL PUBLIC SEWER LINES.
2. ALL PRIVATE SERVICE CONNECTIONS SHALL BE A MINIMUM OF 4-INCH PVC AND INSTALLED AT A MINIMUM SLOPE OF 2 % UNLESS OTHERWISE NOTED.
3. CONTRACTOR TO "POT HOLE" EXISTING SEWER A CONNECTION POINTS PRIOR TO ACTUAL CONSTRUCTION TO VERIFY INVERT ELEVATIONS.
4. ALL PVC SANITARY SEWER PIPE SHALL CONFORM TO ASTM D-3034, SDR 35, AND SHALL BE GREEN IN COLOR, UNLESS SHOWN OTHERWISE ON THE DRAWINGS. PVC SEWER PIPE SHALL BE INSTALLED IN ACCORDANCE WITH THE MANUFACTURE'S RECOMMENDED INSTALLATION PROCEDURES. PVC SEWER PIPE SHALL BE DEFLECTION TESTED NO LESS THAN 30-DAYS AFTER THE TRENCH BACKFILL AND COMPACTION HAS BEEN COMPLETED. THE TEST SHALL BE CONDUCTED BY PULLING AN APPROVED SOLID POINTED MANDREL (95% OF INSIDE DIAMETER) THROUGH THE COMPLETED PIPE LINE.
5. CONTACTOR SHALL CONDUCT A VIDEO INSPECTION UPON COMPLETION OF ALL SEWER CONSTRUCTION AND SUBMIT TO THE CITY OF WEST LINN.
6. PIPE BEDDING AND BACKFILL SHALL CONFORM TO THE CITY OF WES LINN STANDARD DETAILS AND AS NOTED ON THE PLANS.
7. TRENCHES WITHIN THE ROADWAY OR DRIVEWAYS SHALL BE BACKFILLED WITH GRANULAR MATERIALS, COMPACTION SHALL BE SUFFICIENT TO PREVENT SETTLEMENT. CONTRACTOR TO DETERMINE TYPE OF EQUIPMENT, METHOD, AND EFFORT REQUIRED TO ACHIEVE REQUIRED COMPACTION. SUBSEQUENT SETTLEMENT OF THE FINISH SURFACE WITHIN THE WARRANTY PERIOD SHALL BE CONSIDERED THE RESULT OF IMPROPER COMPACTION AND SHALL BE PROMPTLY REPAIRED BY THE CONTRACTOR AT NO EXPENSE TO THE OWNER. COMPACTION TESTING IS REQUIRED AND SHALL BE PER CITY OF WEST LINN STANDARD SPECIFICATIONS SECTION 204.03.13.
8. ALL MANHOLES SHALL BE VACUUM TESTED AND ALL OUTSIDE THE STREET RIGHT-OF-WAY MANHOLES SHALL HAVE TAMPER PROOF LIDS, WITH RIMS 12 INCHES ABOVE FINISH GRADE IN UNPAVED AREAS.
9. CONTRACTOR SHALL MAINTAIN AS-CONSTRUCTED DATA, INCLUDING STATION, LENGTH, AND DEPT OF SERVICE CONNECTION, AND ANY CHANGES MADE DURING CONSTRUCTION. THAT DATA SHALL BE SUBMITTED TO THE ENGINEER UPON COMPLETION OF CONSTRUCTION.
10. INSTALL CONTINUOUS INSULATED COPPER TRACER WIRE AS REQUIRED BY THE UPC AND CITY STANDARDS

WATER SYSTEM:

1. ALL WORK AND MATERIALS SHALL COMPLY WITH THE CITY OF WEST LINN STANDARDS AND SPECIFICATIONS AND THE OREGON STATE HEALTH DIVISION ADMINISTRATIVE RULES, CHAPTER 333.
2. ALL PIPE TO HAVE A MINIMUM COVER OF 36-INCHES BELOW FINISH GRADES.
3. WATER SERVICES SHALL BE COPPER TUBING TYPE "K" 1-INCH DIAMETER FOR ALL SERVICES
4. WATER IMPROVEMENTS SHALL CONSIST OF THE INSTALLATION OF THREE (3) 1" SERVICES. CONTRACTOR SHALL PROVIDE THE EXCAVATION, AND BACKFILLING. THE CITY WILL PROVIDE THE TAPPING AND INSTALL THE SERVICES.

EROSION CONTROL:

1. ALL AREAS DISTURBED DURING CONSTRUCTION TO BE GRADED TO DRAIN AND COMPACTED TO A MINIM OF REQUIRED STANDARDS IMMEDIATELY AFTER INSTALLATION OF UTILITIES OR GRADING.
2. SURFACE RESTORATION SHALL BE PER THE CITY OF WEST LINN STANDARD SPECIFICATIONS SECTION 206.
3. RECOMMENDED SEED MIX: HOBBS AND HOPKINS COMPANION MIX, WITH APPLICATION RATE OF 100 POUNDS PER ACRE. ANNUAL RYEGRASS RECOMMENDED WHEN RAPID GERMINATION IS REQUIRED.
4. FERTILIZER SHALL BE 12-16-8 WITH 50% OF THE NITROGEN DERIVED FROM UREA-FORMALDEHYDE , AND APPLIED AT A RATE OF 400 POUNDS PER ACRE.
5. SEED AND MULCH AT A RATE OF 2000 LB/ACRE/ WITH HEAVY BONDING AGENT OR NETTING AND ANCHORS. MULCH SHALL BE WOOD CELLULOSE FIVER OR OTHER MATERIALS SUITABLE FOR HYDRO-MULCHING
6. TEMPORARY/PERMANENT HYDRO-SEEDING OR ACCEPTABLE SEEDING AND MULCHING MUST BE PROVIDED WHEREVER PERENNIAL COVER CANNOT BE ESTABLISHED ON SITES WHICH WILL BE EXPOSED FOR 60-DAYS OF MORE.
7. INLET PROTECTION, INSPECTION AND MAINTENANCE
   A. BIO -FILTER BAGS OR SILT SACKS SHALL BE INSTALLED IN DOWNSTREAM CATCH BASINS
   B. INLET PROTECTION WILL ALLOW FOR OVERFLOW IN SEVERE STORM EVENTS.
   C. INSPECT ONCE PER WEEK ON ACTIVE SITES AND CLEAN AFTER EACH SIGNIFICANT STORM EVENT

CONDITIONS OF APPROVAL:

1. SITE PLANS: THE IMPROVEMENTS SHALL CONFORM TO THE THREE LOT PARTITION TENTATIVE PLAN (SHEET 1/3) ON PAGE 71 OF EXHIBIT PD-4, DATED APRIL 2013 (STAMPED RECEIVED JUNE 17, 2013), EXCEPT AS MODIFIED BY THESE CONDITIONS OF APPROVAL.
2. DRIVEWAY WIDTH. THE SHARED DRIVEWAY SHALL BE AT LEAST 14 FEET WIDE IN THE SECTIONS SERVING MORE THAN ONE PARCEL, AND AT LEAST 12 FEET WIDE IN THE SECTION SERVING ONLY PARCEL 3.
3. DEMOLITION OF HOUSE. THE EXISTING HOUSE SHALL BE DEMOLISHED BEFORE THE PLAT IS RECORDED. (THIS WILL REQUIRE A DEMOLITION PERMIT FROM THE BUILDING DIVISION.)
4. DRIVEWAY GRADES. THE APPLICANT SHALL GRADE AS NECESSARY TO ENSURE THE WEST END OF THE SHARED DRIVEWAY HAS NO SECTION WHERE THE GRADE EXCEEDS 15%. THE APPLICANT SHALL ALSO GRADE AS NECESSARY TO ENSURE THAT ALL AREAS OF PARCEL 3'S DRIVEWAY HAVE A GRADE OF 12% OR LESS. ALL GRADING SHALL COMPLY WITH THE STANDARDS OF SECTIONS 85.200(E), LOT GRADING.
5. UTILITY EASEMENTS.

   A) THE APPLICANT SHALL PROVIDE EASEMENTS AS NECESSARY ACROSS PARCEL 3 TO CONNECT WATER LATERALS FROM THE PROPOSED WATER METERS TO PARCELS 1 AND 2.

   B) THE APPLICANT SHALL PROVIDE EASEMENTS AS NECESSARY ACROSS PARCEL 3 TO CONNECT SANITARY SEWER LATERALS FROM PARCEL 1 AND 2 TO THE PROPOSED THREE LATERALS STUBS AT THE SOUTH END OF PARCEL 3

   C) THE APPLICANT SHALL DEDICATE AN 8-FOOTWIDE PUBLIC UTILITY EASEMENT FOR FRANCHISE UTILITIES ALONG ROSEMONT ROAD FRONTAGE.
6. CLEAR VISION AREAS.

   A) THE APPLICANT SHALL REMOVE GRADING AND VEGETATION AS NECESSARY TO ACHIEVE THE REQUIRED CLEAR VISION AREA FOR THE INTERSECTION OF SANTA ANITA DRIVE AND ROSEMONT ROAD CONSISTENT WITH SECTION 42.040. THE TRIANGLE SHALL BE MEASURED FROM THE GENERAL TRAJECTORY OF BOTH STREET RIGHT OF WAYS AS THEY ALIGN THE SITE, REGARDLESS OF THE CURVE OF THE RIGHT OF WAY ALONG THE INTERSECTION ITSELF.

   B) GRADING SHALL OCCUR SOUTH OF THE ACCESSWAY INGRESS/EGRESS FROM SANTA ANITA DRIVE, RESULTING IN NO RETAINING WALL BEING OVER THREE FEET IN HEIGHT WITHIN THE CLEAR VISION AREA DIMENSION THAT ARE PROVIDED BY SECTION 42.050. ALSO WITHIN THIS REQUIRED CLEAR VISION TRIANGLE, VEGETATION SHALL BE REMOVED AND TRIMMED AS NECESSARY TO ELIMINATE ANY VISUAL OBSTRUCTION TO CLEAR VISION BETWEEN THREE AND EIGHT FEET OFF THE GROUND.
7. EMERGENCY RESPONSE.

   A) THE APPLICANT SHALL INSTALL A MONUMENT LISTING ALL THREE PROPOSED LOTS' HOUSE NUMBERS, NEAR THE INTERSECTION OF THE SHARED DRIVEWAY WITH SANTA ANITA DRIVE, COMPLYING WITH CLEAR VISION TRIANGLE REQUIREMENTS OF SECTION 42.050. THE NUMBERS SHALL BE VISIBLE FROM SANTA ANITA DRIVE.
8. STREET TREES. THE APPLICANT SHALL PLANT STREET TREES ALONG BOTH STREET FRONTAGES CONSISTENT WITH WEST LINN MUNICIPAL CODE SUBSECTION 8.720, STREET TREES, AND THE TREE TECHNICAL MANUAL, AS APPROVED BY THE CITY ARBORIST.
9. TREES AND HEDGES ALONG NORTH EDGE. WITH THE EXCEPTION OF ANY AT THE WEST END OF THE PARCEL THAT REQUIRE REMOVAL DUE TO CLEAR VISION AREA COMPLIANCE PER CONDITION OF APPROVAL 6 ABOVE, THE APPLICANT SHALL PRESERVE THE HEDGES AND TREES ALONG THE NORTH EDGE OF THE SITE THAT PROVIDE SCREENING TO PROPERTIES TO THE NORTH.

This Plan has been Reviewed & Complies w/

	By	Date
Building:	DWD	10-22-14
Planning:	[illegible]	10-22-14
Engineering:	Khoi Q.L.	10/20/14
Parks:		

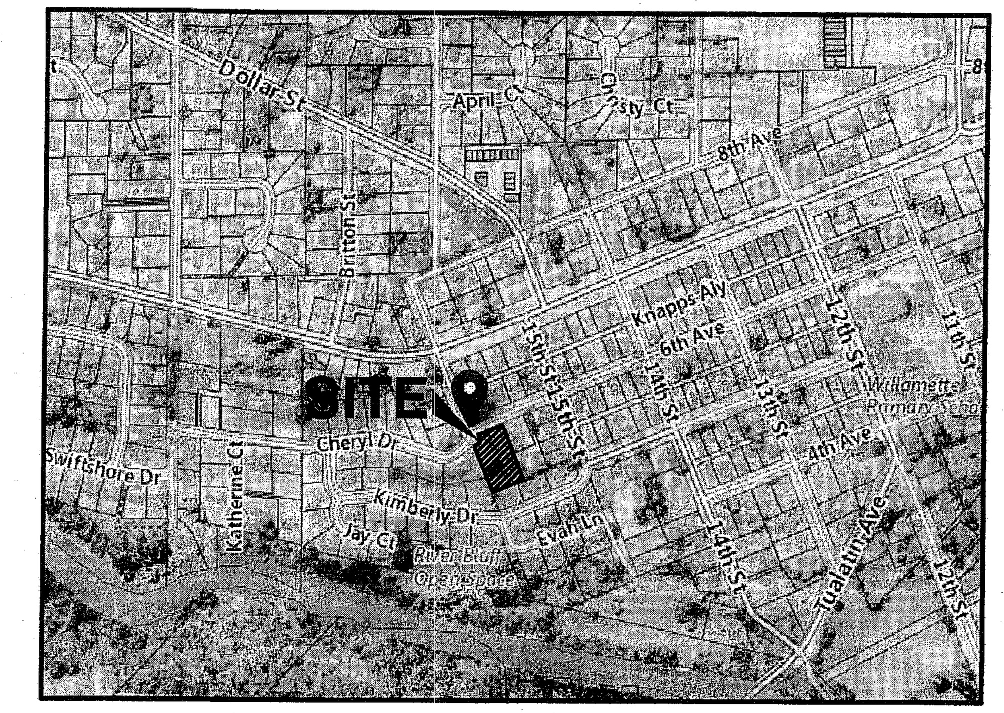

VICINITY MAP
SCALE: NTS

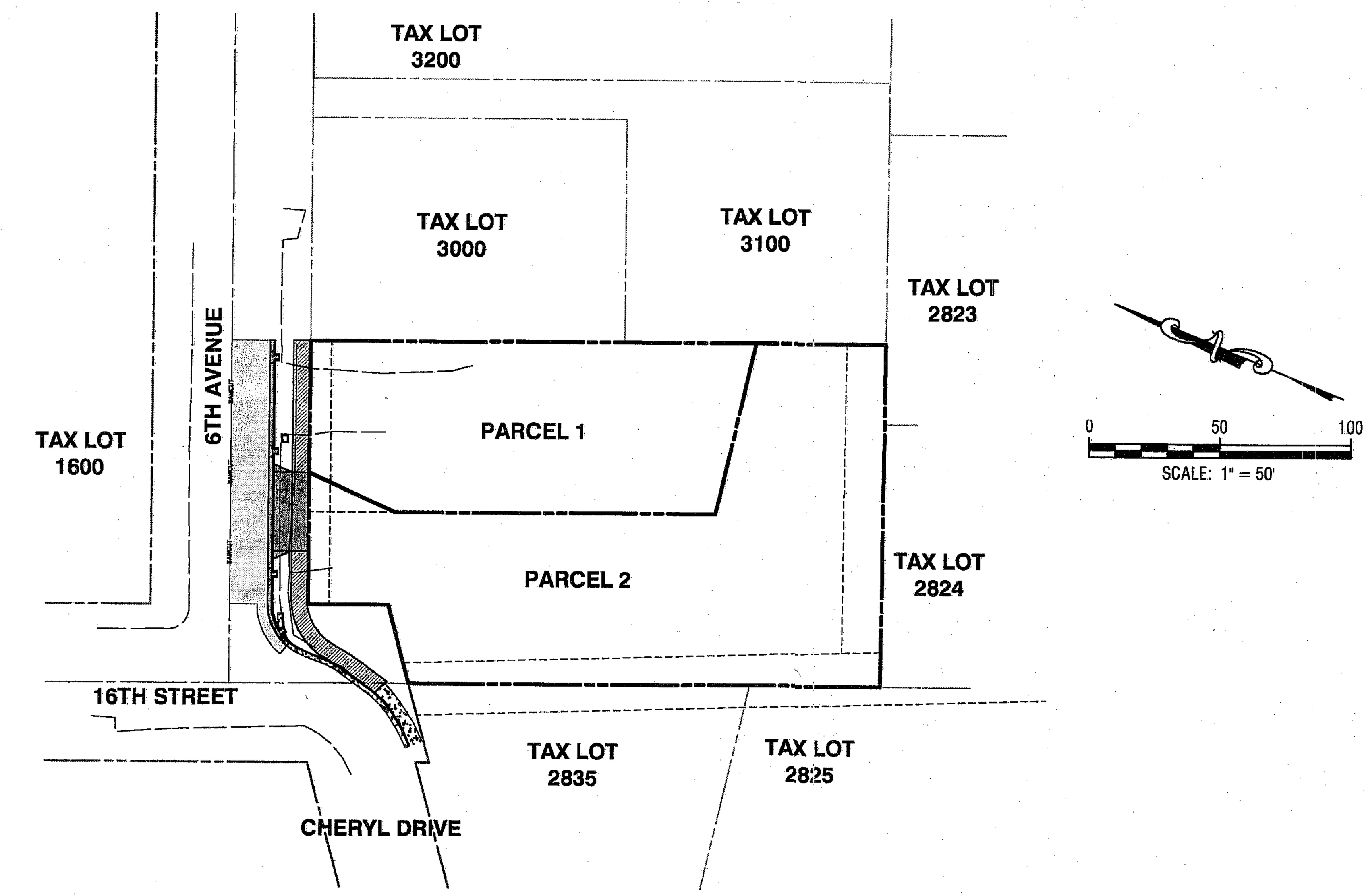

APPLICANT
Icon Construction & Development, LLC.
1980 Willamette Falls Drive, Suite 200
West Linn, OR 97068
Ph: (503) 657-0406

OWNER
David Arnold & Deborah Helper
1519 6th Avenue
West Linn, OR 97068
Ph: (503) 650-0087

SURVEYOR
Centerline Concepts, Inc.
700 Molalla Ave.
Oregon City, OR 97045
Ph: (503) 650-0188

ENGINEER
Theta, LLC
P.O. Box 1345
Lake Oswego, Oregon 97035
Ph: (503) 481-8822

PLANNER
Richard E. Givens, Planning Consultant
18680 Sunblaze Dr.
Oregon City, OR 97045
PH: (503) 479-0097

Legal: 3-1E-02BC TL 2900
Zoning: R-10

DATUM:
Geodic Survey Benchmark @ junction of Highway 205 and Highway 99E
Brass Disk. Elevation 62.48 (NAVD 28)

LEGEND

Symbol	Line type
EXISTING DECIDUOUS TREE	EXISTING PROPERTY BOUNDARY
EXISTING CONIFEROUS TREE	EXISTING PROPERTY LINE
EXISTING LIGHT POLE	EXISTING RIGHT-OF-WAY
EXISTING STREET LIGHT	EXISTING CENTERLINE
EXISTING ELECTRICAL METER	EXISTING FENCE
EXISTING MAILBOX	EXISTING EDGE OF PAVEMENT
EXISTING SIGN	SAN — EXISTING SANITARY LINE
EXISTING GAS METER	W — EXISTING WATER LINE
EXISTING SANITARY MANHOLE	OP — EXISTING OVERHEAD POWER
EXISTING SANITARY CLEANOUT	G — EXISTING GAS
EXISTING WATER VALVE	T — EXISTING TELEPHONE
EXISTING FIRE HYDRANT	NEW PROPERTY LINE
EXISTING WATER METER	NEW EASEMENT
NEW WATER METER	NEW SANITARY LINE
	NEW WATER LINE
	EXISTING CONCRETE
	NEW CONCRETE
	NEW AC PAVEMENT

SHEET INDEX

1 COVER
2 EXISTING CONDITIONS
3 STREET AND UTILITIES PLAN AND PROFILE
4 GRADING AND EROSION CONTROL PLAN
5 STANDARD DETAILS

APPROVED FOR CONSTRUCTION BY
CITY OF WEST LINN
This approval is only for general conformance with the design concept and general compliance with applicable codes and requirements and shall not be construed as relieving the Design Engineer of full responsibility for accuracy and completeness of the drawings. This plan review approval does not prevent the City from requiring further code corrections in the field.
DATE: 10/20/14 BY: Khoi Q.L.

REGISTERED PROFESSIONAL ENGINEER 7123 OREGON July 16, 1971 BRUCE D. GOLDSON
EXPIRES: 06/30/2015
SIGNATURE DATE: 07/24/2014

MP 14-03
STREET AND UTILITY PLAN

2014-129B

		DATE	NO.	REVISION
DESIGNED:	BDG			
DRAWN:	BJS			
SCALE:	1" = 10'			
DATE:	June, 2014			
FILE:	6th Street Civil1			

Theta, llc
ENGINEERING - SURVEYING - PLANNING
PO Box 1345
Lake Oswego, Oregon 97035
503/481-8822
email: thetaeng@comcast.net

Icon Construction & Development, LLC.
1980 Willamette Falls Drive, Suite 200
West Linn, OR 97068
Ph: (503) 657-0406

1519 6th Avenue
West Linn, Oregon 97068
T.3S., R.1E., Section 02BC
Clackamas County, Oregon

SHEET: 1/5

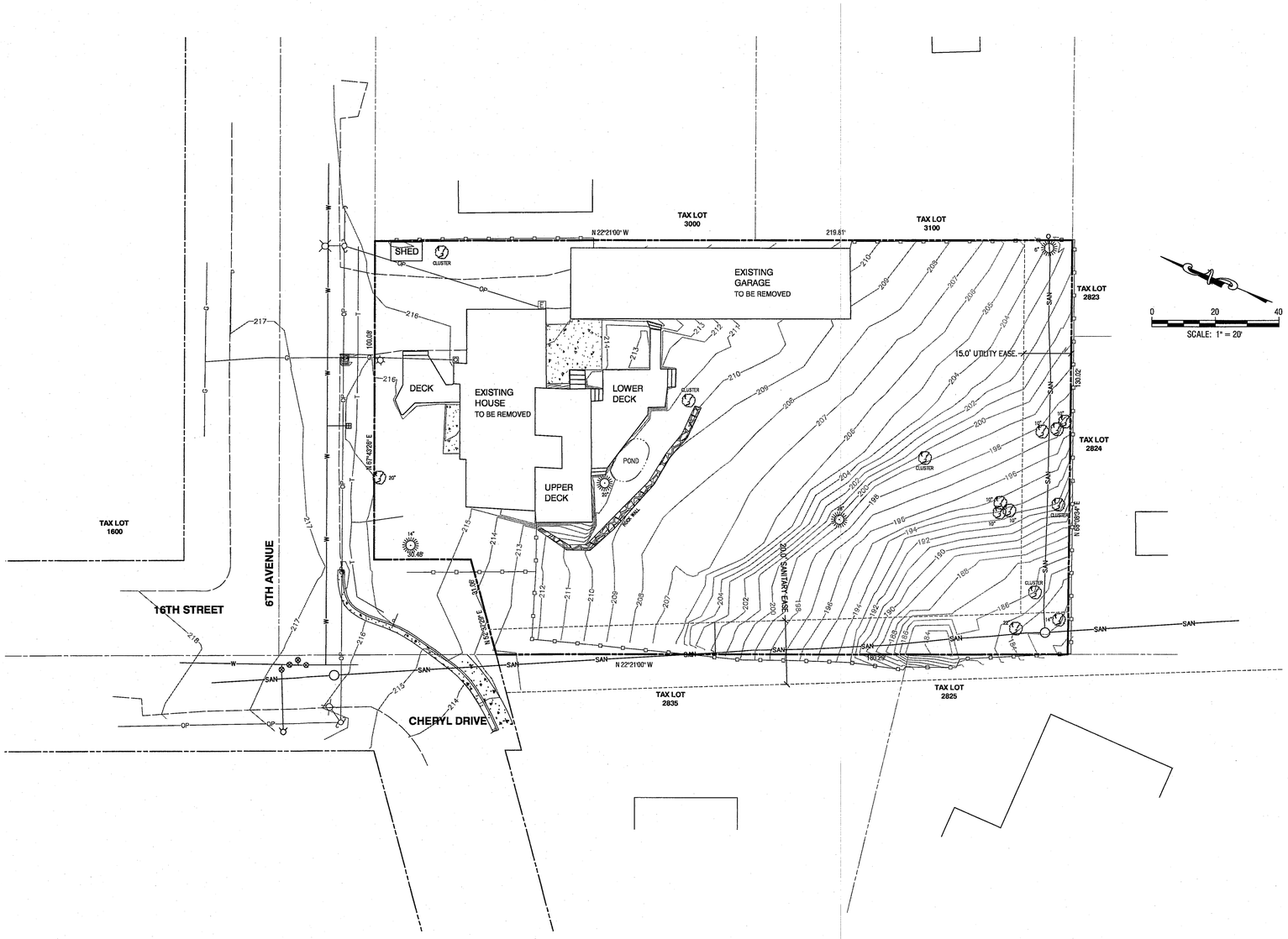

APPROVED FOR CONSTRUCTION BY
CITY OF WEST LINN
This approval is only for general conformance with the design concept and general compliance with applicable codes and requirements and shall not be construed as relieving the Design Engineer of full responsibility for accuracy and completeness of the drawings. This plan review approval does not prevent the City from requiring further code corrections in the field.
DATE: 10/30/14 BY: Kevin Cole

REGISTERED PROFESSIONAL ENGINEER 7120 OREGON July 16, 1971 BRUCE D. GOLDSON

EXPIRES: 06/30/2015
SIGNATURE DATE: 07/24/2014

MP 14-03
EXISTING CONDITIONS

2014-129B

DESIGNED:	BDG			
DRAWN:	BJS			
SCALE:	1" = 10'			
DATE:	June, 2014			
FILE:	6th Street Civil1	DATE	NO.	REVISION

Theta, llc
ENGINEERING - SURVEYING - PLANNING
PO Box 1345
Lake Oswego, Oregon 97035
503/481-8822
email: thetaeng@comcast.net

Icon Construction & Development, LLC.
1980 Willamette Falls Drive, Suite 200
West Linn, OR 97068
Ph: (503) 657-0406

1519 6th Avenue
West Linn, Oregon 97068
T.3S., R.1E., Section 02BC
Clackamas County, Oregon

SHEET: 2/5

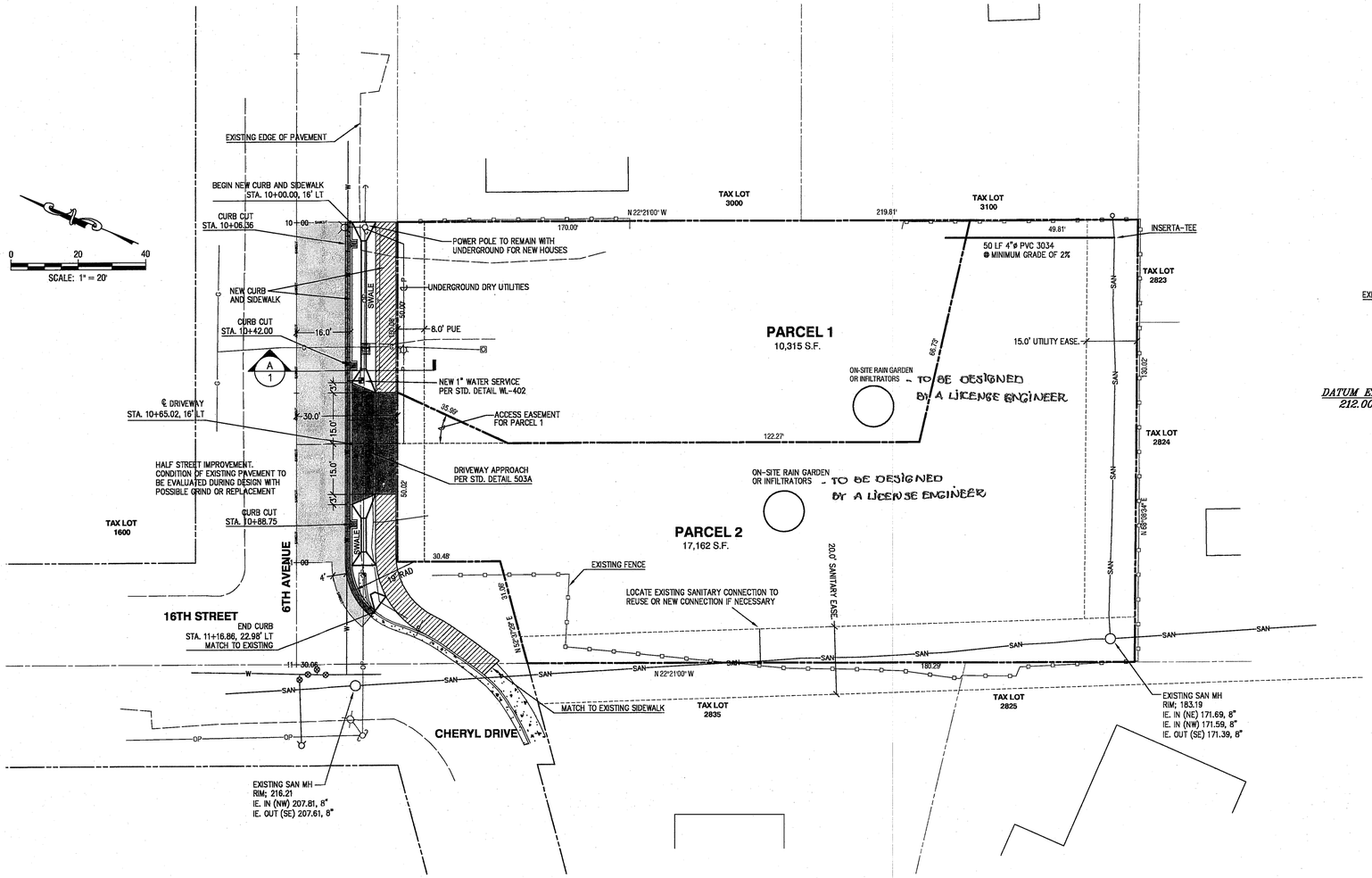

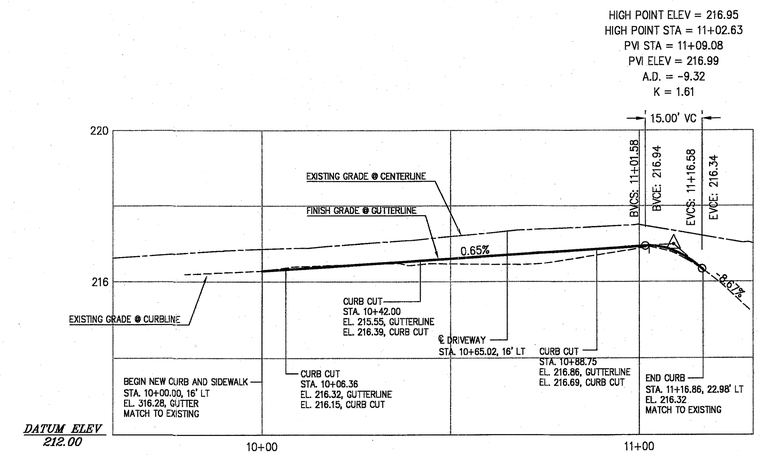

6TH AVENUE GUTTERLINE PROFILE (1/3)

SCALE: 1" = 20' HORIZONTAL
1" = 2' VERTICAL

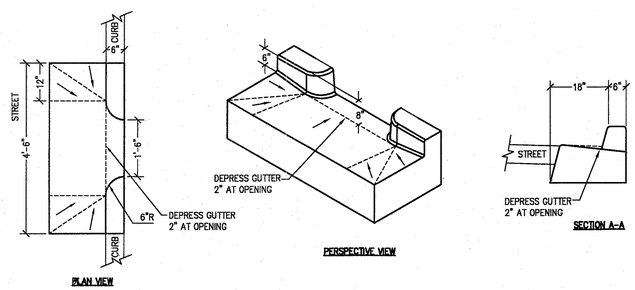

CONCRETE INLET (B/1)

SCALE: NTS

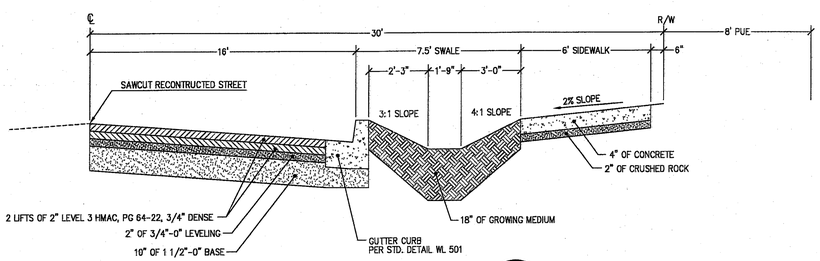

6TH AVENUE SECTION (A/1)

SCALE: NTS

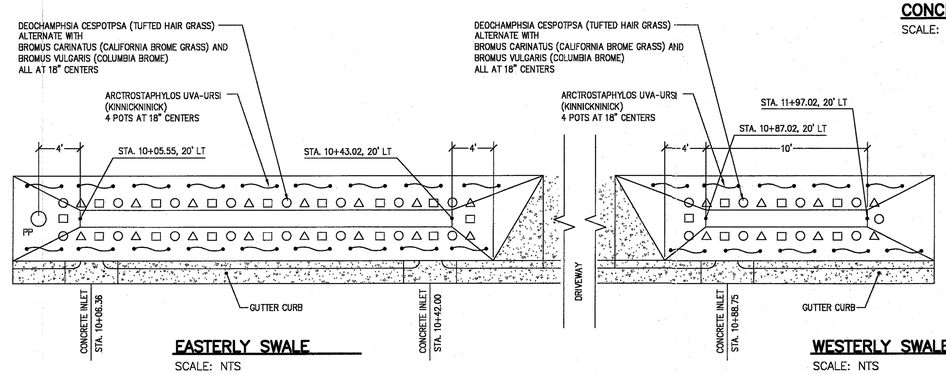

EASTERLY SWALE

SCALE: NTS

WESTERLY SWALE

SCALE: NTS

APPROVED FOR CONSTRUCTION BY CITY OF WEST LINN

This approval is only for general conformance with the design concept and general compliance with applicable codes and requirements and shall not be construed as relieving the Design Engineer of full responsibility for accuracy and completeness of the drawings. This plan review approval does not prevent the City from requiring further code corrections in the field.

DATE: 10/20/14 BY: Khoi Le

REGISTERED PROFESSIONAL ENGINEER 7120 OREGON JULY 16, 1971 BRUCE D. GOLDSON

EXPIRES: 06/30/2015
SIGNATURE DATE: 07/31/2014

MP 14-03

STREET AND UTILITIES PLAN AND PROFILE

2014-129B

DESIGNED:	BDG			
DRAWN:	BJS			
SCALE:	1" = 10'			
DATE:	June, 2014			
FILE:	6th Street Civil1	DATE	NO.	REVISION

Theta, llc
ENGINEERING - SURVEYING - PLANNING
PO Box 1345
Lake Oswego, Oregon 97035
503/481-8822
email: thetaeng@comcast.net

Icon Construction & Development, LLC.
1980 Willamette Falls Drive, Suite 200
West Linn, OR 97068
Ph: (503) 657-0406

1519 6th Avenue
West Linn, Oregon 97068
T.3S., R.1E., Section 02BC
Clackamas County, Oregon

SHEET: 3/5

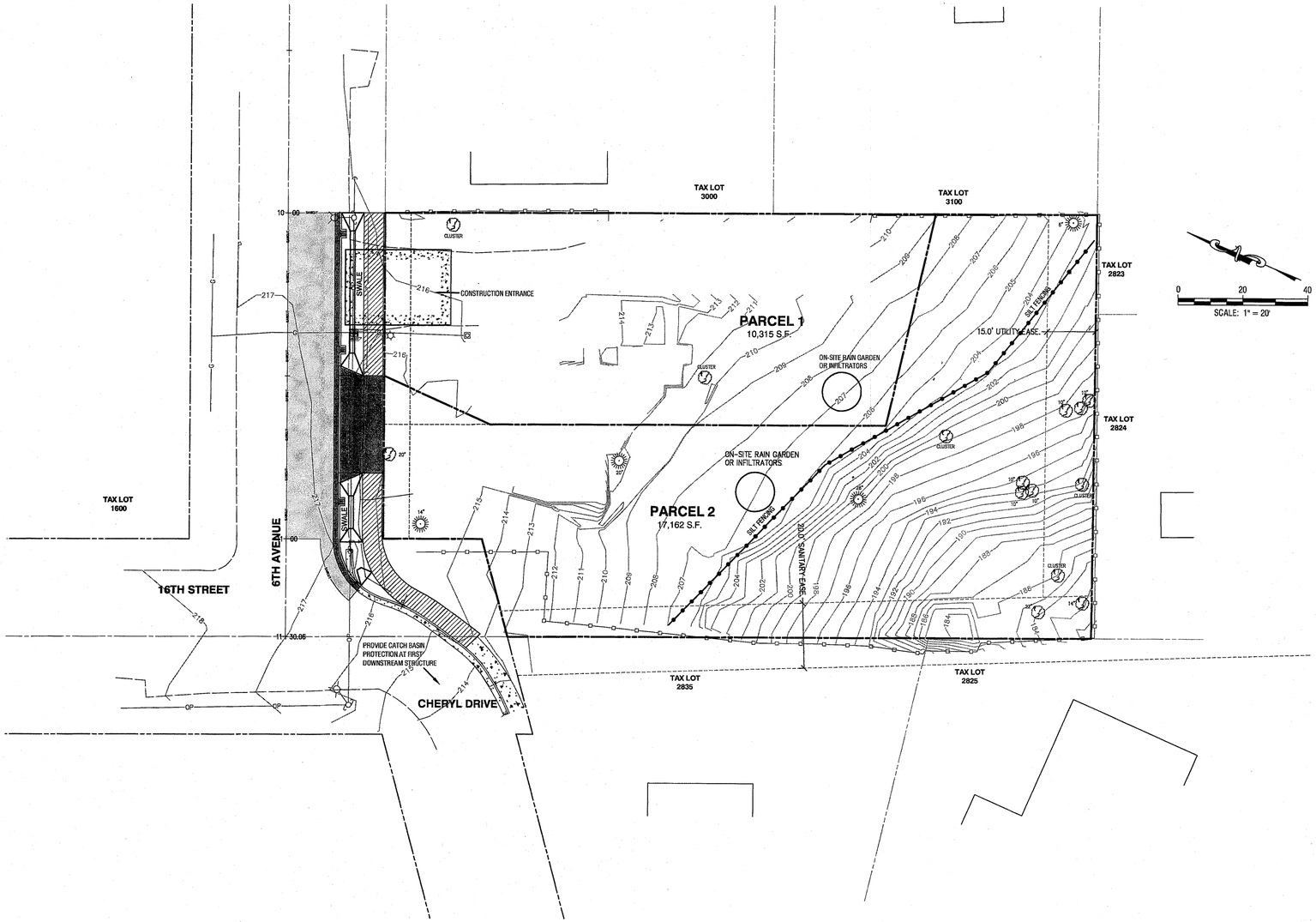

APPROVED FOR CONSTRUCTION BY
CITY OF WEST LINN
This approval is only for general conformance with the design concept and general compliance with applicable codes and requirements and shall not be construed as relieving the Design Engineer of full responsibility for accuracy and completeness of the drawings. This plan review approval does not prevent the City from requiring further code corrections during field
DATE: 10/20/14 BY:

REGISTERED PROFESSIONAL ENGINEER 7120 OREGON July 16, 1971 BRUCE D. GOLDSON

EXPIRES: 06/30/2015
SIGNATURE DATE: 07/30/2014

2014-129B

MP 14-03
EROSION CONTROL PLAN

DESIGNED:	BDG			
DRAWN:	BJS			
SCALE:	1" = 10'			
DATE:	June, 2014			
FILE:	6th Street Civil1	DATE	NO.	REVISION

Theta, llc
ENGINEERING - SURVEYING - PLANNING
PO Box 1345
Lake Oswego, Oregon 97035
503/481-8822
email: thetaeng@comcast.net

Icon Construction & Development, LLC.
1980 Willamette Falls Drive, Suite 200
West Linn, OR 97068
Ph: (503) 657-0406

1519 6th Avenue
West Linn, Oregon 97068
T.3S., R.1E., Section 02BC
Clackamas County, Oregon

SHEET:
4/5

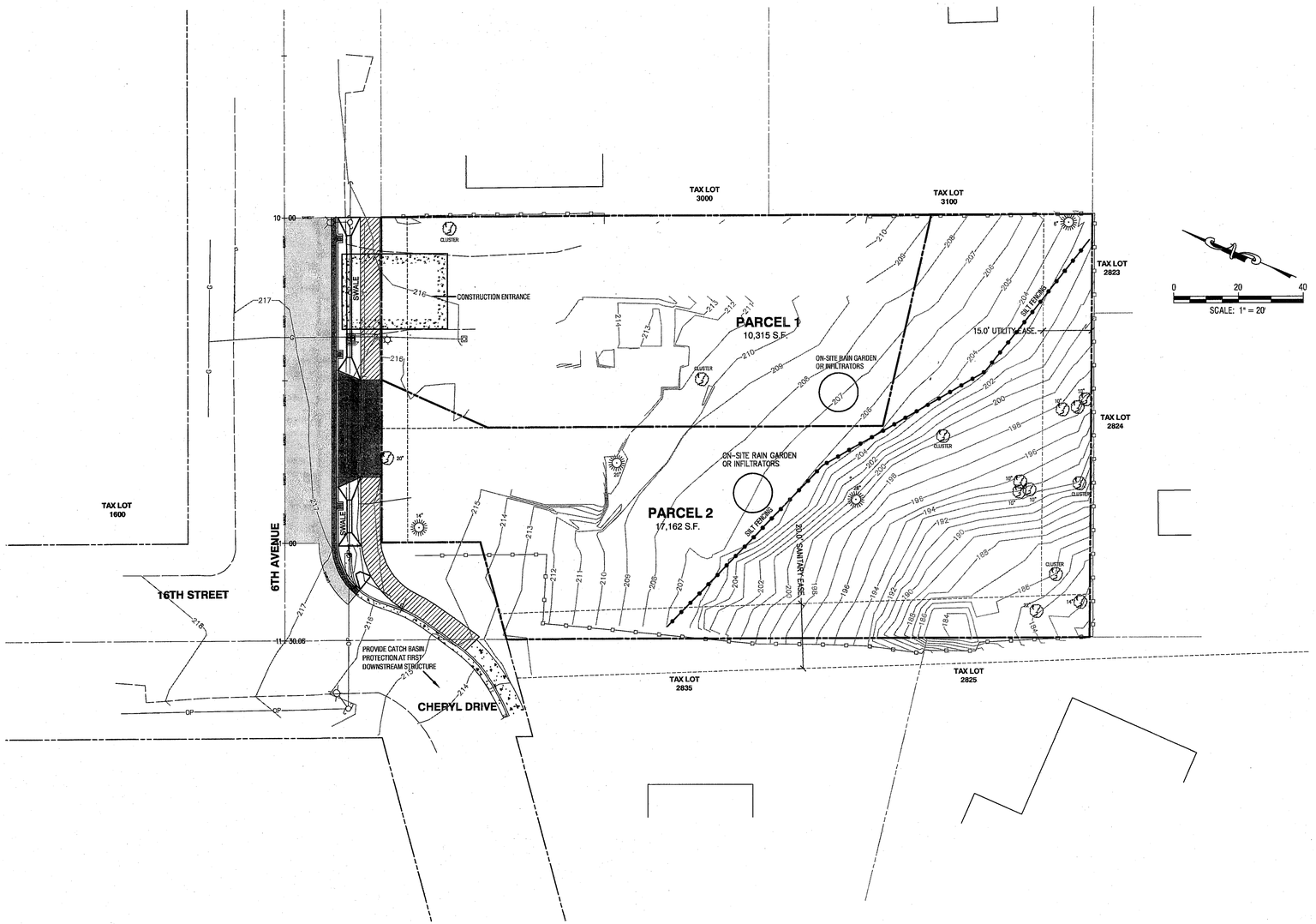

APPROVED FOR CONSTRUCTION BY
CITY OF WEST LINN
This approval is only for general conformance with the design concept and general compliance with applicable codes and requirements and shall not be construed as relieving the Design Engineer of full responsibility for accuracy and completeness of the drawings. This plan review approval does not prevent the City from requiring further code corrections during the field.
DATE: 10/20/14 BY:

REGISTERED PROFESSIONAL ENGINEER
7120
OREGON
July 16, 1971
BRUCE D. GOLDSON

EXPIRES: 06/30/2015
SIGNATURE DATE: 07/30/2014

MP 14-03
EROSION CONTROL PLAN

2014-129B

DESIGNED:	BDG			
DRAWN:	BJS			
SCALE:	1" = 10'			
DATE:	June, 2014			
FILE:	6th Street Civil1	DATE	NO.	REVISION

Theta, llc
ENGINEERING - SURVEYING - PLANNING
PO Box 1345
Lake Oswego, Oregon 97035
503/481-8822
email: thetaeng@comcast.net

Icon Construction & Development, LLC.
1980 Willamette Falls Drive, Suite 200
West Linn, OR 97068
Ph: (503) 657-0406

1519 6th Avenue
West Linn, Oregon 97068
T.3S., R.1E., Section 02BC
Clackamas County, Oregon

SHEET:
4/5

THIS DETAIL DRAWING SHALL NOT BE ALTERED OR CHANGED IN ANY MANNER EXCEPT BY THE CITY ENGINEER. IT IS THE RESPONSIBILITY OF THE USER TO ACQUIRE THE MOST CURRENT VERSION OF THE DETAIL.

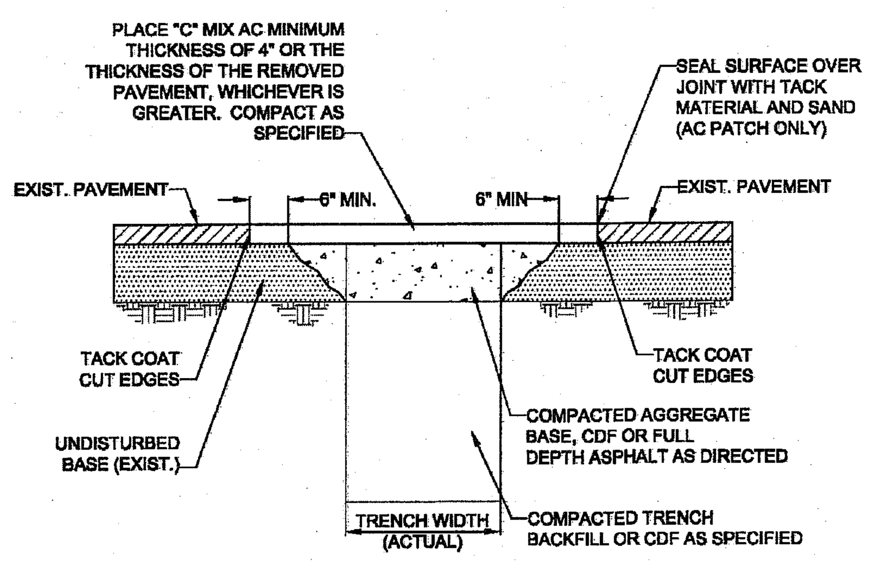

NOTE:

1. ALL EXISTING AC OR PCC PAVEMENT SHALL BE SAWCUT TO NEAT, STRAIGHT LINES PRIOR TO REPAVING.
2. CONCRETE PAVEMENT SHALL BE REPLACED WITH CONCRETE TO A MINIMUM THICKNESS OF REMOVED PAVEMENT, WHICHEVER IS GREATER.
3. IF EXISTING BASE MATERIAL IS CTB OR ATB, THEN REPLACEMENT BASE MATERIAL SHALL MATCH EXISTING.
4. ALL UTILITIES SHALL HAVE A MINIMUM COVER OF 36".
5. ALL TRENCH BACKFILL SHALL BE COMPACTED TO 95% OF MAXIMUM DENSITY PER AASHTO T-180 OR AS SPECIFIED IN THE CONTRACT DOCUMENTS.
6. ALL TRENCH BACKFILL AND PATCHING SHALL CONFORM TO THE STANDARDS AND SPECIFICATIONS OF THE CITY OF WEST LINN.
7. APPROVED CDF SHALL BE USED OR 3/4 - 0" GRAVEL BACKFILL SHALL BE PLACED AND COMPACTED IN 12" MAXIMUM LIFTS. IF 3/4-0" GRAVEL BACKFILL IS USED, COMPACTION TESTING BY A CERTIFIED TESTING COMPANY IS REQUIRED AT DEPTH INTERVALS AS SPECIFIED BY THE CITY ENGINEER.
8. T-CUT MAY BE ENLARGED AT THE DISCRETION OF THE CITY ENGINEER OR CITY INSPECTOR DUE TO SITE CONDITIONS OR PROJECT REQUIREMENTS.
9. ALL CUT EDGES SHALL BE SAND SEALED.
10. COMPACTED BACKFILL OR CDF MUST EXTEND 2 FEET OUTSIDE OF PAVEMENT SURFACE.

STREET T-CUT

City of West Linn | DATE: 2010 | DRAWING NO. WL-203 | FILE NO.

THIS DETAIL DRAWING SHALL NOT BE ALTERED OR CHANGED IN ANY MANNER EXCEPT BY THE CITY ENGINEER. IT IS THE RESPONSIBILITY OF THE USER TO ACQUIRE THE MOST CURRENT VERSION OF THE DETAIL.

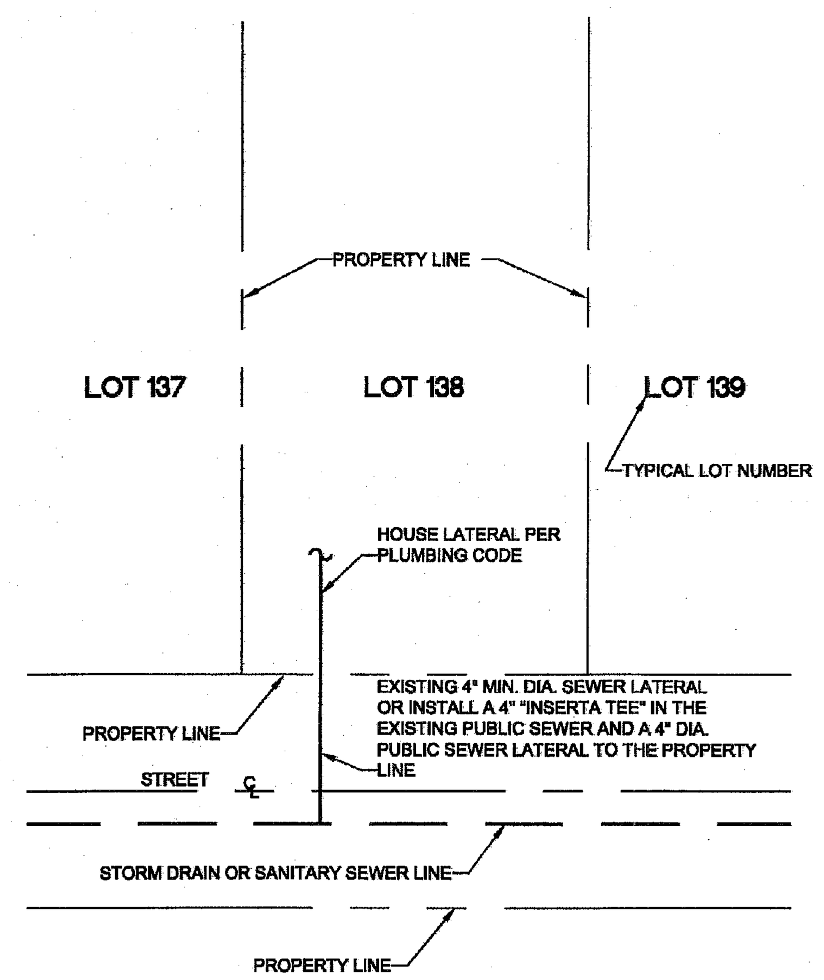

TYPICAL CONNECTION FOR SINGLE FAMILY RESIDENCE.

SEWER CONNECTION SINGLE FAMILY EXISTING LOT

City of West Linn | DATE: 2010 | DRAWING NO. WL-216 | FILE NO.

THIS DETAIL DRAWING SHALL NOT BE ALTERED OR CHANGED IN ANY MANNER EXCEPT BY THE CITY ENGINEER. IT IS THE RESPONSIBILITY OF THE USER TO ACQUIRE THE MOST CURRENT VERSION OF THE DETAIL.

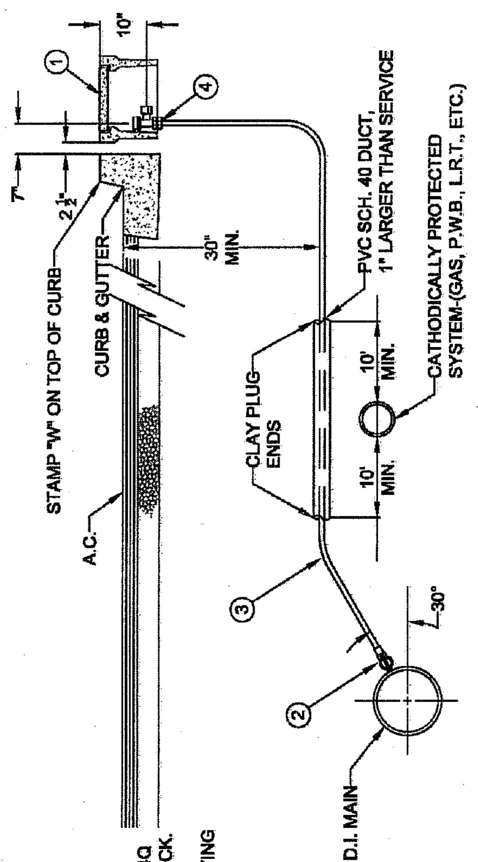

MATERIAL:

1. BROOKS METER BOX, BODY NO. 37, LID AND COVER NO.37-S.
2. MUELLER CORP. STOP NO. H-15008 OR FORD F1000-4Q CORP. STOP WITH OPERATING NUT AT 3 OR 9 O'CLOCK.
3. 1" SOFT TEMPER, TYPE "K" COPPER TUBING COMPLYING WITH ASTM B-88.
4. MUELLER ANGLE METER STOP NO. H-14258 (FORD NO. KV43-444W-Q).

NOTE:

1. MACHINE DRILLED AND TAPPED ONLY. NO HAND DRILLING IS ALLOWED.
2. SUBSTITUTES FOR ANY MATERIALS SHOWN SHALL BE APPROVED BY THE CITY ENGINEER.
3. ALL PIPE AND STRUCTURE ZONE SHALL BE BACKFILLED USING 3/4" MINUS CRUSHED AGG. AND COMPACTED TO 95% MAX DENSITY AS DETERMINED BY AASHTO T-180.
4. WHEN AN ACTIVE CATHODIC PROTECTED SYSTEM IS ENCOUNTERED, SCH. 40 PVC SHALL BE INSTALLED AS SHOWN ABOVE WITH CLAY PLUG.
5. METER BOX SHALL BE CENTERED OVER THE COMPLETED METER ASSEMBLY.
6. TAPS INTO MAIN TO HAVE 18" SEPARATION ON CENTER MINIMUM.
7. ANGLE METER STOPS TO BE 18" FROM PROPERTY LINE AND NOT IN DRIVEWAY APPROACH.
8. METER BOXES IN CURB TIGHT SIDEWALK AND THOSE SUBJECT TO INCIDENTAL AUTO TRAFFIC MUST HAVE METAL LIDS AND BE TRAFFIC RATED.

STANDARD 1" WATER SERVICE

City of West Linn | DATE: 2010 | DRAWING NO. WL-402 | FILE NO.

THIS DETAIL DRAWING SHALL NOT BE ALTERED OR CHANGED IN ANY MANNER EXCEPT BY THE CITY ENGINEER. IT IS THE RESPONSIBILITY OF THE USER TO ACQUIRE THE MOST CURRENT VERSION OF THE DETAIL.

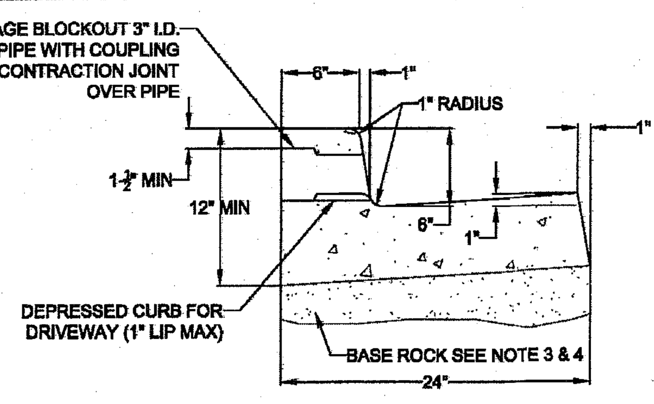

FLUSH, DEPRESSED CURB FOR WHEELCHAIR RAMP 2% MAX SLOPE

TYPICAL CURB AND GUTTER

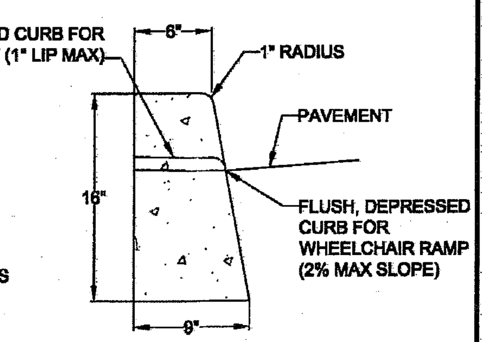

TYPICAL STRAIGHT CURB

NOTE:

1. CONCRETE SHALL HAVE A BREAKING STRENGTH OF 3300 PSI AFTER 28 DAYS
2. CONTRACTION JOINTS:
   A) TO BE PROVIDED:
      -AT EACH POINT OF TANGENCY
      -AT EACH COLD JOINT
      -AT EACH SIDE OF INLET STRUCTURES
      -AT BOTH SIDES OF AN APPROACH
   B) SPACING TO BE NOT MORE THAN 15 FEET
   C) THE DEPTH OF THE JOINT SHALL BE AT LEAST 1/3 OF THE THICKNESS OF CONCRETE
   D) EXPANSION JOINTS SHALL NOT BE USED
3. BASE ROCK - 1-1/2"-0", 95% COMPACTION PER AASHTO T-180 ROCK SHALL BE TO SUBGRADE OF THE STREET SECTION OR 4" IN DEPTH, WHICHEVER IS GREATER
4. FULL DEPTH PREPARED ROCK SECTION SHALL EXTEND 1' HORIZONTALLY BEYOND BOTH SIDES OF CURB AND GUTTER
5. DRAINAGE BLOCK - 3" DIA. PLASTIC PIPE
   A) DRAINAGE ACCESS THROUGH EXISTING CURBS SHALL BE DONE BY:
      -CORE DRILLING
      -VERTICAL SAWCUT OF CURB 24" EACH SIDE OF DRAIN AND RE-POURED TO FULL DEPTH OF CURB
6. STAMP TOP OF CURB WITH "W" AT WATER SERVICE CROSSING AND "S" AT SANITARY LATERAL CROSSING

TYPICAL CURBS

City of West Linn | DATE: 2010 | DRAWING NO. WL-501 | FILE NO.

THIS DETAIL DRAWING SHALL NOT BE ALTERED OR CHANGED IN ANY MANNER EXCEPT BY THE CITY ENGINEER. IT IS THE RESPONSIBILITY OF THE USER TO ACQUIRE THE MOST CURRENT VERSION OF THE DETAIL.

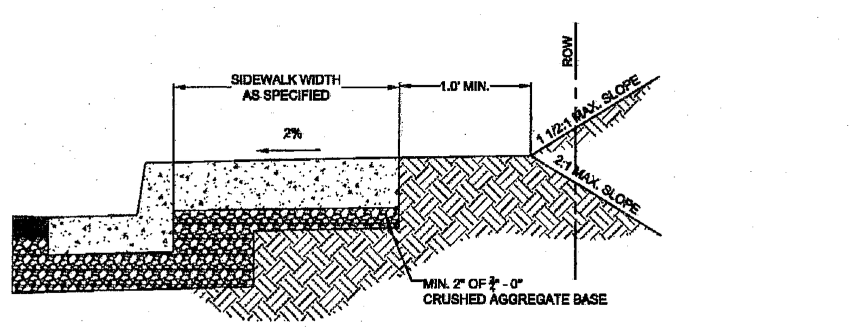

TYPICAL CURB TIGHT SIDEWALK

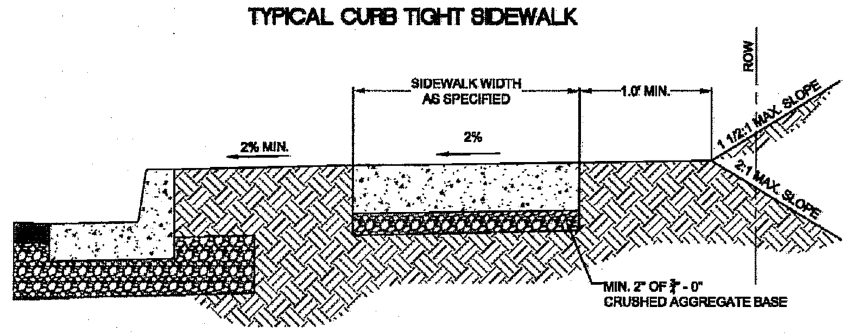

SIDEWALK AWAY FROM CURB

NOTE:

1. CONCRETE SHALL BE 3300 PSI AT 28 DAYS.
2. PANEL LENGTHS SHALL BE EQUAL TO THE SIDEWALK WIDTH, BUT MAY BE ADJUSTED WITH THE CITY ENGINEER'S APPROVAL.
3. CONTRACTION JOINTS (1/3RD OF THE THICKNESS OF CONCRETE) SHALL BE PLACED EVERY THIRD PANEL, WITH A MAX. SPACING OF 15 FEET. JOINTS SHALL ALSO BE PLACED AT THE SIDES OF DRIVEWAY APPROACHES, UTILITY VAULTS, AND WHEELCHAIR RAMPS.
4. A CURING COMPOUND SHALL BE USED. WHITE REFLECTIVE SHEETING SHALL BE USED IN CASE OF RAIN.
5. FOR SIDEWALKS ADJACENT TO THE CURB AND POURED AT THE SAME TIME AS THE CURB, THE JOINT BETWEEN THEM SHALL BE A TROWELED JOINT WITH A MIN. 1/2" RADIUS.
6. THE SIDEWALK SHALL HAVE A MIN. THICKNESS OF 6" IF THE SIDEWALK IS INTENDED AS A PORTION OF THE THE DRIVEWAY. OTHERWISE, THE SIDEWALK SHALL HAVE A MIN. THICKNESS OF 4".
7. DRAIN BLOCKOUTS IN THE CURB SHALL BE EXTENDED TO THE BACK OF THE SIDEWALK WITH A 3" DIAMETER PLASTIC PIPE AT A 2% SLOPE. A CONTRACTION JOINT SHALL BE PLACED OVER THE PIPE.

CONCRETE SIDEWALK CROSS SECTION

City of West Linn | DATE: 2010 | DRAWING NO. WL-508 | FILE NO.

THIS DETAIL DRAWING SHALL NOT BE ALTERED OR CHANGED IN ANY MANNER EXCEPT BY THE CITY ENGINEER. IT IS THE RESPONSIBILITY OF THE USER TO ACQUIRE THE MOST CURRENT VERSION OF THE DETAIL.

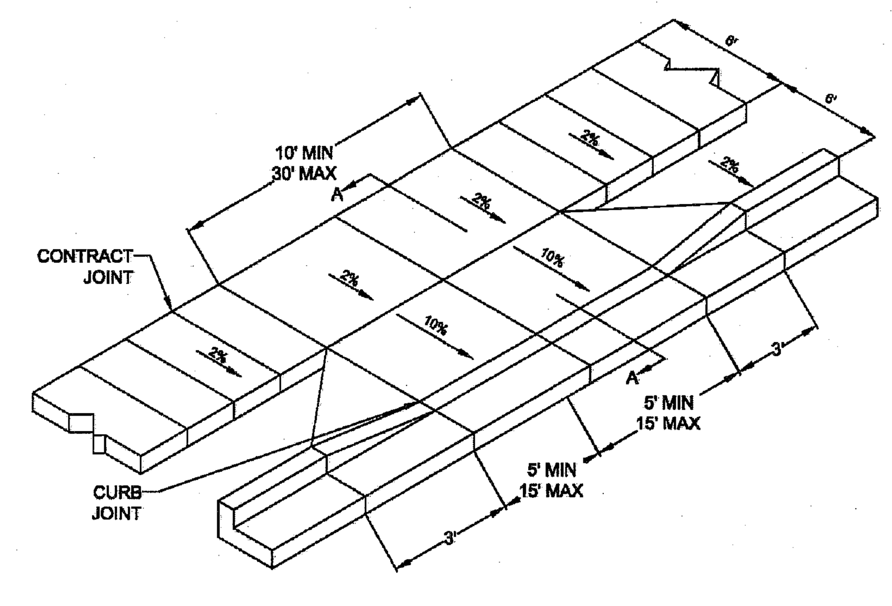

SIDEWALK AWAY FROM CURB

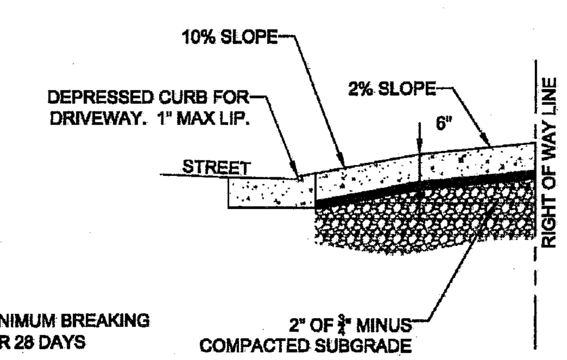

SECTION A-A

NOTE:

1. CONCRETE SHALL HAVE A MINIMUM BREAKING STRENGTH OF 3300 PSI AFTER 28 DAYS 6 SACK MIX
2. CURB SHALL BE TROWELED JOINT WITH MIN. 1/2" RADIUS ALONG BACK OF CURB
3. DRIVEWAY SHALL BE A MINIMUM 6" THICK
4. DRIVEWAY CURB CUT SHALL COMPLY WITH THE CONDITIONS OF 5.0070, "WIDTH AND LOCATION OF CURB CUTS"
5. FOR REPLACEMENT OF EXISITNG APPROACH:
   A. MUST MEET CURRENT ADA REQUIREMENTS TO GREATEST DEGREE POSSIBLE.
   B. DAMAGED ROADWAY MUST BE SAWCUT AND REPAVED WITH CLASS C HOT MIX ASPHALT

RESIDENTIAL DRIVEWAY WITH SIDEWALK AWAY FROM CURB

City of West Linn | DATE: 2010 | DRAWING NO. WL-503A | FILE NO.

APPROVED FOR CONSTRUCTION BY
CITY OF WEST LINN
This approval is only for general conformance with the design concept and general compliance with applicable codes and requirements and shall not be construed as relieving the Design Engineer of full responsibility for accuracy and completeness of the drawings. This plan review approval does not prevent the City from requiring further code corrections in the field.
DATE: 10/20/14 BY: Kevin Cole

STANDARD DETAILS

2014-129B

DESIGNED:	BDG			
DRAWN:	BJS			
SCALE:	NTS			
DATE:	June, 2014			
FILE:	6th Street Details	DATE	NO.	REVISION

Theta, llc
ENGINEERING - SURVEYING - PLANNING
PO Box 1345
Lake Oswego, Oregon 97035
503/481-8822
email: thetaeng@comcast.net

Icon Construction & Development, LLC.
1980 Willamette Falls Drive, Suite 200
West Linn, OR 97068
Ph: (503) 657-0406

1519 6th Avenue
West Linn, Oregon 97068
T.3S., R.1E., Section 02BC
Clackamas County, Oregon