Lake Oswego · Tigard Water Partnership
sharing water · connecting communities

APPROVED FOR CONSTRUCTION BY
CITY OF WEST LINN
This approval is only for general conformance with the design concept and general compliance with applicable codes and requirements and shall not be construed as relieving the Design Engineer of full responsibility for accuracy and completeness of the drawings. This plan review approval does not prevent the City from requiring further code corrections in the field.
DATE: 5/14/14 BY: Khoi Q. Le

Lake Oswego - Tigard Water Partnership

WORK ORDER 205 & 207

RAW & FINISHED WATER PIPELINES PROJECT
SCHEDULE 3 - MAPLETON

This City of West Linn Public Improvement Permit set of drawings reflects West Linn as constructed 8-inch waterline on Mapleton Drive.
This is based on information provided by City of West Linn through conforming and an additional change shown on Drawing 3-C-28M.

APRIL 2014
CONFORMED TO BID DOCUMENTS
VOLUME 5 OF 5

This Plan has been Reviewed & Complies w/

	By	Date
Building:	DWP	5-22-14
Planning:	Tayr Pelz, AICP	5/19/14
Engineering:	Khoi Q. Le	5/14/14
Parks:	MP	6-2-14

CONFORMED TO BID DOCUMENTS - USER ACKNOWLEDGES THAT THE BID SET OF DOCUMENTS AND THE ORIGINAL ADDENDA SHALL GOVERN SHOULD THERE BE ANY DISCREPANCY BETWEEN THESE DOCUMENTS AND THE BID SET OF DOCUMENTS AND ANY ADDENDA ISSUED PRIOR TO THE BID.

ATTENTION: OREGON LAW REQUIRES YOU TO FOLLOW RULES ADOPTED BY THE OREGON UTILITY NOTIFICATION CENTER. THOSE RULES ARE SET FORTH IN OAR 925-001-0010 THROUGH CAR 925-001-0090. YOU MAY OBTAIN COPIES OF THE RULES BY CALLING THE CENTER. (NOTE: THE TELEPHONE NUMBER FOR THE OREGON UTILITY NOTIFICATION CENTER IS (503) 232-1987).

Kennedy/Jenks Consultants
200 SW MARKET, SUITE 500, PORTLAND OREGON 97201

THIS DRAWING WAS ORIGINALLY SEALED BY FREDERICK C. NEAL, A REGISTERED PROFESSIONAL ENGINEER IN THE STATE OF OREGON, No. 85267

PLOT DATE: April 17, 2014 - 4:40PM USER: Cornerc
FILE: N:\2011\1910102\2_Mar\Dwgs_3\Work\1910102-3-G-01M.dwg

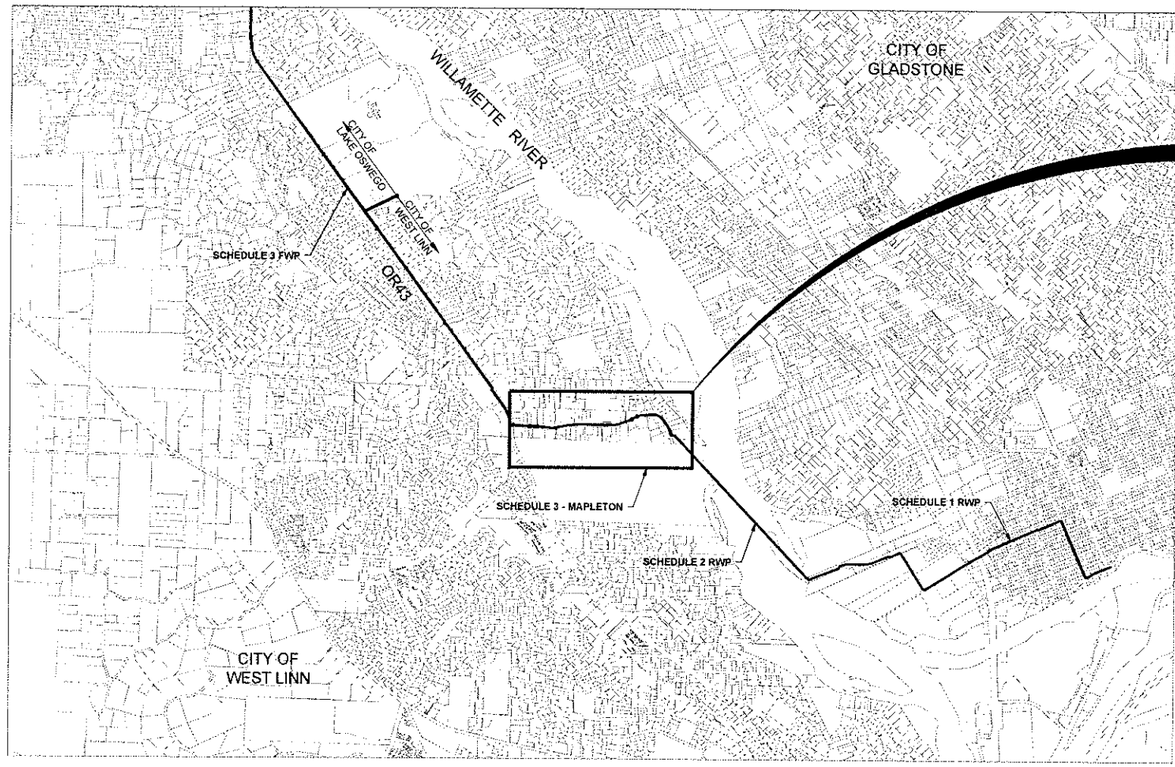

0 1500 3000
1"=1500'

LOCATION MAP

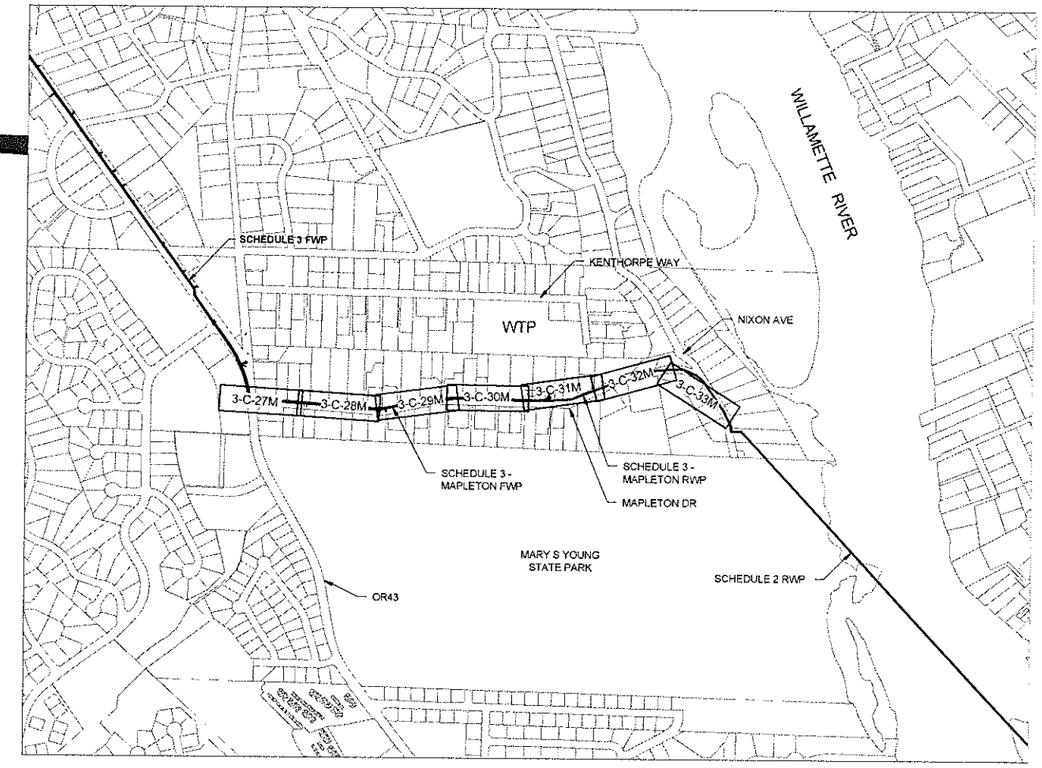

0 500 1000
1"=500'

VICINITY MAP / PIPELINE SHEET INDEX

APPROVED FOR CONSTRUCTION BY
CITY OF WEST LINN
This approval is only for general conformance with the design concept and general compliance with applicable codes and requirements and shall not be construed as relieving the Design Engineer of full responsibility for accuracy and completeness of the drawings. This plan review approval does not prevent the City from requiring further code corrections in the field.
DATE: 5/14/14 BY: Khoi Q. Le

Kennedy/Jenks Consultants
200 SW MARKET, SUITE 500, PORTLAND OREGON 97201

LINE IS 2 INCHES AT FULL SIZE (IF NOT 2" - SCALE ACCORDINGLY)

DESIGNED: SG
DRAWN: DOM
CHECKED: TRM
CHECKED: BM
APPROVED: FN

REVISIONS

REV.	DESCRIPTION	BY	DATE	APP.

THIS DRAWING WAS ORIGINALLY SEALED BY FREDERICK C. NEAL, A REGISTERED PROFESSIONAL ENGINEER IN THE STATE OF OREGON, No. 85267

CONFORMED TO BID DOCUMENTS

Lake Oswego · Tigard Water Partnership
sharing water · connecting communities

SCHEDULE 3 - MAPLETON
GENERAL
LOCATION AND VICINITY MAP AND PIPELINE SHEET INDEX

FILENAME 119101620-3-G-02M
KENNEDY/JENKS PROJECT NUMBER 1191016.20
SCALE AS SHOWN
DRAWING FIGURE NUMBER 3-G-02M

PLOT DATE: April 15, 2014 - 4:15PM USER: DomM
FILE: R:\2011\1191016.20_LakeOswego_Fwm\119101620-3-G-02M.dwg

APPROVED FOR CONSTRUCTION BY
CITY OF WEST LINN
This approval is only for general conformance with the design concept and general compliance with applicable codes and requirements and shall not be construed as relieving the Design Engineer of full responsibility for accuracy and completeness of the drawings. This plan review approval does not prevent the City from requiring further code corrections in the field.
DATE: 5/14/14 BY: Khoi Q. Le

MAPLETON - FWP AND RWP DRAWINGS

DWG No.	SHT No.	TITLE
		GENERAL
3-G-01M	1	TITLE SHEET
3-G-02M	2	LOCATION AND VICINITY MAP AND PIPELINE SHEET INDEX
3-G-03M	3	PIPELINE DRAWING LIST AND HYDRAULIC PROFILE
3-G-04M	4	LEGEND AND SYMBOL SHEET
3-G-05M	5	ABBREVIATIONS
3-G-06M	6	POTHOLE DATA TABLE UTILITY CONTACT LIST AND LINE AND CURVE TABLE
3-G-07M	7	GENERAL NOTES AND STAGING AREA
		CIVIL
3-C-27M	8	FINISHED WATER PLAN AND PROFILE STA 435+95 TO 438+60
3-C-28M	9	FINISHED WATER PLAN AND PROFILE STA 438+60 TO 443+80
3-C-29M	10	FINISHED WATER PLAN AND PROFILE STA 443+80 TO 449+40
3-C-30M	11	FINISHED WATER PLAN AND PROFILE STA 449+40 TO 455+46
3-C-31M	12	RAW WATER PLAN AND PROFILE STA 10+32 TO 15+00
3-C-32M	13	RAW WATER PLAN AND PROFILE STA 15+00 TO 20+00
3-C-33M	14	RAW WATER PLAN AND PROFILE STA 20+00 TO 25+18 △1
3-C-51M	15	CONNECTION DETAILS
3-C-53M	16	CAV PLANS
3-C-58M	17	RAW WATER PIPELINE ABANDONMENT
3-C-60M	18	STANDARD DETAILS LAKE OSWEGO
3-C-61M	19	STANDARD DETAILS WEST LINN
3-C-70M	20	APPURTENANCE DETAILS 1
3-C-71M	21	APPURTENANCE DETAILS 2
3-C-72M	22	MISCELLANEOUS DETAILS
3-C-73M	23	WSP DETAILS
3-C-74M	24	TRENCH SECTIONS
		UTILITY RELOCATION
3-R-01M	25	PLAN AND PROFILE SANITARY SEWER RELOCATION
		CATHODIC PROTECTION
3-CP-02M	26	CATHODIC PROTECTION TEST STATIONS
3-CP-03M	27	CATHODIC PROTECTION DETAILS
		LANDSCAPING
3-L-02M	28	PLANTING PLANS
3-L-03M	29	LANDSCAPE RESTORATION FOR MAPLETON DRIVE EASEMENT
3-L-04M	30	PLANTING DETAILS
		TRAFFIC CONTROL
3-T-01M	31	DRAWING INDEX
3-T-02M	32	DETOUR PLAN - MAPLETON DR BETWEEN OR43 AND NIXON AVE
3-T-03M	33	NIXON AVE/MAPLETON DR INTERSECTION
3-T-04M	34	TYPICAL SINGLE LANE CLOSURE WITH FLAGGERS - MAPLETON DR SOUTH OF NIXON AVE
3-T-05M	35	TYPICAL TRAFFIC CONTROL DETAILS - DETOURS

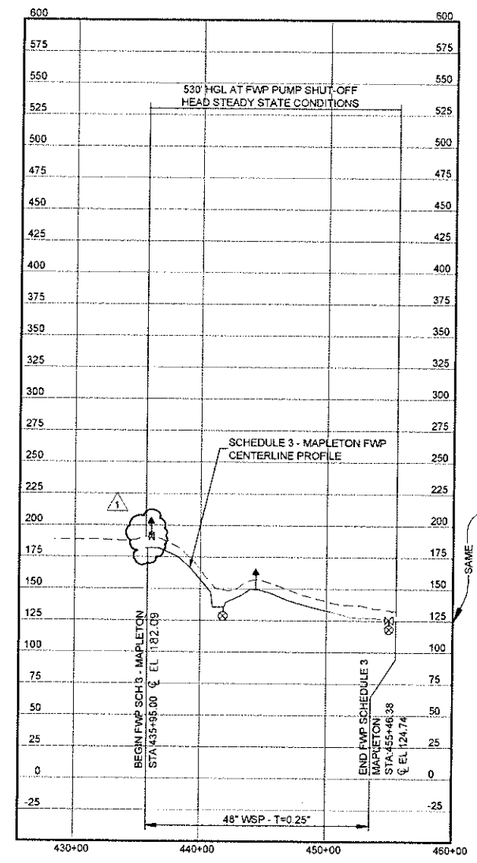

FINISHED WATER

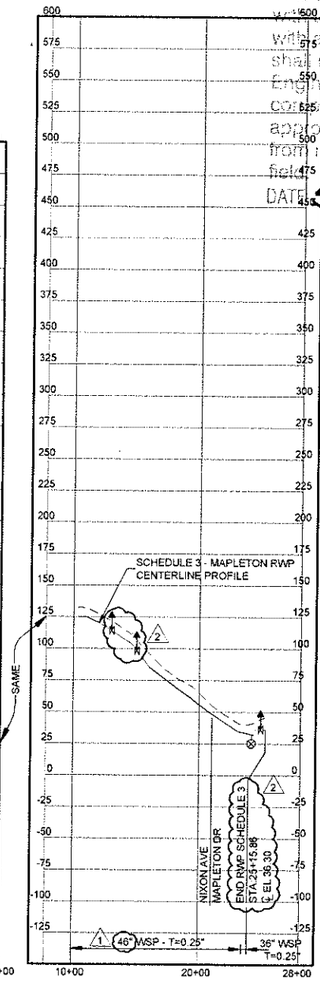

RAW WATER

SCHEDULE 3 - MAPLETON
HYDRAULIC PROFILE

0 600 1200
HORIZ 1"=600'
0 30 60
VERT 1"=60'

Kennedy/Jenks Consultants
200 SW MARKET, SUITE 500, PORTLAND OREGON 97201

LINE IS 2 INCHES AT FULL SIZE (IF NOT 2" - SCALE ACCORDINGLY)

DESIGNED: SG
DRAWN: DDM
CHECKED: TRM
CHECKED: BM
APPROVED: FN

REVISIONS

REV.	DESCRIPTION	BY	DATE	APP.
2	ADDENDUM 9-33	FN	03/10/14	
1	ADDENDUM 4-15	SG	02/14/14	FN

THIS DRAWING WAS ORIGINALLY SEALED BY FREDERICK C. NEAL, A REGISTERED PROFESSIONAL ENGINEER IN THE STATE OF OREGON, No. 85267

CONFORMED TO BID DOCUMENTS

Lake Oswego · Tigard Water Partnership
sharing water · connecting communities

SCHEDULE 3 - MAPLETON
GENERAL
PIPELINE DRAWING LIST AND HYDRAULIC PROFILE

FILENAME 119101620-3-G-03M
KENNEDY/JENKS PROJECT NUMBER 1191016.20
SCALE AS SHOWN
DRAWING/FIGURE NUMBER 3-G-03M

PLOT DATE: April 17, 2014 - 4:40PM USER: ConnorC
FILE: N:\2011\1191016.20_LakeOswego_FW\M\119101620-3-G-03M.dwg

SECTION IDENTIFICATION

(1) SECTION CUT ON DRAWING 3-D-01:

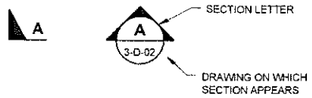

(2) ON DRAWING 3-D-02 THIS SECTION IS IDENTIFIED AS:

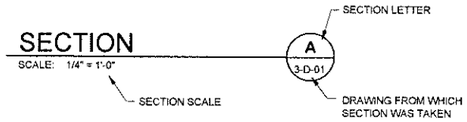

DETAIL IDENTIFICATION

(1) DETAIL CALLOUT ON DRAWING 3-C-01:

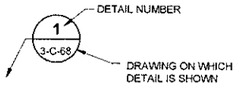

(2) ON DRAWING 3-C-68 THIS DETAIL IS IDENTIFIED AS:

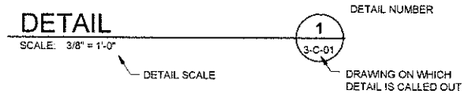

CIVIL SYMBOLS

- EXISTING GRASS
- EXISTING ASPHALT SURFACE
- EXISTING GRAVEL SURFACE
- EXISTING CONCRETE SURFACE
- EXISTING BRICK SURFACE
- EXISTING WETLANDS
- EXISTING SENSITIVE AREA
- PLAN AND PROFILE SHADING REPRESENTS PCC PANELS; OVERLAY PLAN SHADING REPRESENTS AC OVERLAY
- WL — EXISTING WETLAND DITCH FLOWLINE
- CTV — EXISTING CABLE TELEVISION
- W — 10" W — EXISTING WATER
- E — EXISTING ELECTRICAL
- E(OH) — EXISTING OVERHEAD ELECTRICAL
- G — EXISTING GAS
- SD — 18" SD — EXISTING STORM DRAIN
- SS — 8" SS — EXISTING SANITARY SEWER
- SL — EXISTING SEWER LATERAL
- AS — EXISTING SANITARY SEWER ABANDONED BY OTHERS
- AW — EXISTING WATER ABANDONED BY OTHERS
- FO — 4" FO — EXISTING FIBER OPTIC
- T — EXISTING TELEPHONE
- EXISTING RAILROAD TRACKS
- WA — WORK AREA BOUNDARY
- SEDIMENT FENCE
- ORANGE CONSTRUCTION FENCE
- PE — PERMANENT EASEMENT
- TCE — TEMPORARY CONSTRUCTION EASEMENT
- OTHER PERMANENT EASEMENTS
- LIMIT OF GRADING OR EXISTING GRADE LINE
- PROPERTY LINE OR RIGHT-OF-WAY
- ABANDONMENT SYMBOL
- WATER PIPELINE TO BE TRANSFERRED FOR USE BY OTHERS
- STAGING AREA BOUNDARY
- CURB AND GUTTER
- ROAD CENTER STRIP
- STREET LIGHTING

- R — RECTIFIER
- PB — NEW PULL BOX
- P54 — POTHOLE LOCATION
- BORING LOCATION
- UTILITY POLE
- BENCH MARK
- ø — ROUND OR DIAMETER
- SQUARE
- @ — AT
- ∠ — ANGLE
- CL OR ℄ — CENTER LINE
- GROUNDWATER ELEVATION
- (E) FIRE HYDRANT
- TS- — NEW CATHODIC TEST STATIONS
  - TS-T = STANDARD
  - TS-ISO = ISOLATION
  - TS-W = WATER
  - TS-G = GAS
  - TS-GW = GAS AND WATER
  - TS-C = CASING

- ℄ — CENTERLINE
- NEW STRUCTURE OR FACILITY
- EXISTING STRUCTURE OR FACILITY
- FUTURE STRUCTURE OR FACILITY
- X — NEW FENCE (CHAIN LINK)
- EXISTING FENCE
- CMU — NEW WALL (CMU)
- TEMPORARY FENCE
- 115 — EXISTING GRADE CONTOUR
- 100 — FINISH CONTOUR
- ⊗ 30.2 — 30.2 — FINISHED ELEVATION
- × 30.2 — EXISTING ELEVATION
- CUT SLOPE
- FILL SLOPE
- NEW AC PAVING
- FLOW DIRECTION
- DITCH CENTERLINE WITH FLOW DIRECTION
- NEW PIPELINE SMALLER THAN 12" DIA
- NEW PIPELINE (CIVIL SHEETS) 12" DIA AND LARGER
- NEW DRAIN (PLAN, PROFILE)
- NEW COMBINATION AIR VALVE
- NEW BUTTERFLY VALVE (OR)
- NEW GATE VALVE
- NEW PLUG VALVE
- MH16 — NEW STORM DRAIN MANHOLE
- S — NEW SEWER MANHOLE
- SURVEYED EVERGREEN TREE
- SURVEYED DECIDUOUS TREE

APPROVED FOR CONSTRUCTION BY
CITY OF WEST LINN
This approval is only for general conformance with the design concept and general compliance with applicable codes and requirements and shall not be construed as relieving the Design Engineer of full responsibility for accuracy and completeness of the drawings. This plan review approval does not prevent the City from requiring further code corrections in the field.
DATE: 5/14/14 BY: Khoi Q. Le

Kennedy/Jenks Consultants
200 SW MARKET, SUITE 500, PORTLAND OREGON 97201

LINE IS 2 INCHES AT FULL SIZE (IF NOT 2" - SCALE ACCORDINGLY)

DESIGNED: SG
DRAWN: DDM
CHECKED: TRM
CHECKED: BM
APPROVED: FN

REVISIONS

REV.	DESCRIPTION	BY	DATE	APP.

THIS DRAWING WAS ORIGINALLY SEALED BY FREDERICK C. NEAL, A REGISTERED PROFESSIONAL ENGINEER IN THE STATE OF OREGON, No. 85267

CONFORMED TO BID DOCUMENTS

Lake Oswego · Tigard Water Partnership
sharing water · connecting communities

SCHEDULE 3 - MAPLETON
GENERAL
LEGEND AND SYMBOL SHEET

FILENAME 119101620-3-G-04M
KENNEDY/JENKS PROJECT NUMBER 1191016.20
SCALE AS SHOWN
DRAWING/FIGURE NUMBER 3-G-04M

PLOT DATE: April 16, 2014 - 4:16PM USER: DougM
FILE: N:\DEV\119101620_Mapleswap_Phase\119101620-3-G-04M.dwg

ABBREVIATIONS

&	AND
±	APPROXIMATELY
Δ	DEFLECTION
°	DEGREE
=	EQUALS
'	FOOT
>	GREATER THAN
"	INCH
<	LESS THAN
#	NUMBER
%	PERCENT
A	AREA
AB	ANCHOR BOLT(-S)
ABAN	ABANDON (-ED)
AC	ACRE, ASPHALTIC CONCRETE
A.C.	ASBESTOS CEMENT
A/C	ASPHALT CONCRETE
AGG	AGGREGATE
ALT	ALTERNAT(-E,-IVE)
ANSI	AMERICAN NATIONAL STANDARD INSTITUTE
APPROX	APPROXIMAT(-E,-LY)
ASPH	ASPHALT
ASTM	AMERICAN SOCIETY FOR TESTING AND MATERIALS
ATM	ATMOSPHERE (14.7 LB/IN SQ)
AWWA	AMERICAN WATER WORKS ASSOCIATION
AVE	AVENUE
BC	BEGINNING OF HORIZONTAL CURVE
BF, B.F.	BLIND FLANGE; BUTTERFLY
BFP	BACKFLOW PREVENTER
BFV	BUTTERFLY VALVE
BHP	BRAKE HORSEPOWER
BITUM	BITUMINOUS
BLDG	BUILDING
BLK	BLOCK(-S)
BM	BEAM, BENCHMARK
B.M.	BENCH MARK
BO	BLOWOFF
BRG	BEARING
BTWN	BETWEEN
°C	DEGREES CELSIUS (CENTIGRADE)
C	CONDUIT
CAV	COMBINATION AIR VALVE
CB	CATCH BASIN
CC	CENTER TO CENTER
CDF	CONTROLLED DENSITY FILL
CEM	CEMENT
CF	CUBIC FEET
CHAN	CHANNEL
CHKR	CHECKERED
CHL	CHAINLINK
CI	CAST IRON
CIP	CAST IRON PIPE
CIRC	CIRCULA(-R,-TION)
CIRCUM	CIRCUMFERENCE
CISP	CAST IRON SOIL PIPE
CJ	CONSTRUCTION JOINT
CL	PIPE CLASS
CLR	CLEAR (-ANCE)
CMC	CEMENT MORTAR COATED
CML	CEMENT MORTAR LINED
CML&C	CEMENT MORTAR LINED & COATED
CMP	CORRUGATED METAL PIPE
CMU	CONCRETE MASONRY UNIT(-S)
CO	CLEANOUT
CONC	CONCRETE
CONN	CONNECT (-S,-ION)
CONST	CONSTRUCT (-ION)
CONST JT,CJ	CONSTRUCTION JOINT
CONT	CONTINU (-ED,-OUS,-ATION)
CONTR	CONTRACTOR
COORD	COORDINATE
COR	CORNER
CORR	CORRUGATED
COUP.,CPLG	COUPLING
CPP	CORRUGATED PLASTIC PIPE
CTR	CENTER
CTS	CATHODIC TEST STATION
CU	COPPER
CV	CHECK VALVE
CWT	ONE HUNDRED POUNDS
CY	CUBIC YARD
D, DR	DRAIN
DBL	DOUBLE
DEG	DEGREE(-S)
DEMO, (D)	DEMOLISH
DET, DTL	DETAIL(-S)
DI	DUCTILE IRON
DIA	DIAMETER
DIAG	DIAGONAL(-S)
DIM.	DIMENSION(-S)
D.I.P., DIP	DUCTILE IRON PIPE
DN	DOWN
DWG(S)	DRAWING(-S)
E	ELECTRIC, EAST
EA	EACH
EC	END OF HORIZONTAL CURVE
ECC	ECCENTRIC
EF	EACH FACE; EXHAUST FAN
e.g.	FOR EXAMPLE
EGL	ENERGY GRADE LINE
EL, ELEV.	ELEVATION
ELB, ELL	ELBOW
EL&C	EPOXY LINED & COATED
ELEC	ELECTRIC (-AL)
EMERG	EMERGENCY
ENCL	ENCLOSURE
ENGR	ENGINEER
EP	EDGE OF PAVEMENT
EQ	EQUAL (-LY)
EQUAL , EQ.	EQUALIZATION
EQUIP	EQUIPMENT
EST	ESTIMATE (-D)
EXC	EXCAVATE
EXIST., (E)	EXISTING
EXP	EXPANSION
EXP JT	EXPANSION JOINT
EXT	EXTERIOR, EXTENSION
EVC	END OF VERTICAL CURVE
EW	EACH WAY
EWEF	EACH WAY EACH FACE
°F	DEGREE FAHRENHEIT
FT	FEET, FOOT
FAB	FABRICATE(-D)
FC	FLEXIBLE COUPLING
FCA	FLANGED COUPLING ADAPTER
FDN	FOUNDATION
FE	FIRE EXTINGUISHER
FF	FAR FACE, FINISH FLOOR
FG	FLAP GATE
FH	FIRE HYDRANT, FLAT HEAD
FIG.	FIGURE
FIN.	FINISH(-ED)
FIN. GD	FINISH GRADE
FL	FLOW LINE
FLEX	FLEXIBLE
FLG, FL	FLANGE(-D)
FLR	FLOOR
FM	FLOW METER, FORCE MAIN
FOB	FLAT ON BOTTOM
FOT	FLAT ON TOP
FRC	FLEXIBLE RUBBER COUPLING
FT	FEET
FT 3	CUBIC FEET
FT 2	SQUARE FEET
FTG	FOOTING
FWD	FORWARD
FWP	FINISHED WATER PIPELINE
G	GAS
GA	GAUGE
GAL	GALLON (-S)
GALV	GALVANIZE(-D)
GDL	GROUND LEVEL
GEN	GENERATOR
GENL	GENERAL
GLV	GLOBE VALVE
GND	GROUND
GR	GRADE, GROUND, GRAM
GS	GALVANIZED STEEL
GV	GATE VALVE
H	HIGH
HB	HOSEBIBB
HCR	HANDICAP CURB RAMP
HDPE	HIGH DENSITY POLYETHYLENE
HGL	HYDRAULIC GRADE LINE
HGT, HT	HEIGHT
HORIZ	HORIZONTAL
HPT, H.P.	HIGH POINT
HR	HOUR
HT	HEIGHT
HWY	HIGHWAY
ID	INSIDE DIAMETER
IE	INVERT ELEVATION
I.F.	INSIDE FACE
IMB	IRON MOUNTAIN BOULEVARD
IN 3	CUBIC INCHES
IN 2	SQUARE INCHES
IN	INCH (-ES)
INSTR	INSTRUMENT
INSUL	INSULAT(-E,-ION)
INV	INVERT
IPS	INTERNATIONAL PIPE STANDARD
JB, J-BOX	JUNCTION BOX
JT	JOINT
KIP	ONE THOUSAND POUNDS
L	LENGTH; LITER
LAT	LATERAL
LB	POUND(-S)
LF	LINEAR FEET
LG	LONG
LH	LEFT HAND
LOC	LOCATION
LONG.	LONGITUDINAL
LP	LOW POINT
LT	LEFT
LW	LOW WATER
LWL	LOW WATER LEVEL
(M)	MODIF (-Y, -IED)
MAX	MAXIMUM
MECH	MECHANICAL
MFR	MANUFACTURER
MH	MANHOLE
MIN	MINIMUM; MINUTE
MISC	MISCELLANEOUS
MJ	MECHANICAL JOINT
MODIF	MODIFICATION(-S)
MON	MONUMENT
MPH	MILES PER HOUR
MTG	MANUFACTURER
N	NORTH
(N)	NEW
N/A	NOT APPLICABLE
N.C., NC	NORMALLY CLOSED
NE	NORTHEAST
NGVD	NATIONAL GEODETIC VERTICAL DATUM
NIC, N.I.C.	NOT IN CONTRACT
NO.	NUMBER
NORM	NORMAL
NTS	NOT TO SCALE
NW	NORTHWEST
OA	OVERALL
OC	ON CENTER
OD	OUTSIDE DIAMETER
ODOT	OREGON DEPARTMENT OF TRANSPORTATION
OF , OF	OVERFLOW
OH	OVERHEAD POWER
OPNG	OPENING
OPER	OPERATOR
OPP	OPPOSITE
OPRD	OREGON PARKS AND RECREATION DEPARTMENT
OR43	OREGON ROUTE 43
ORIG	ORIGINAL
OS&Y	OUTSIDE SCREW & YOKE (RISING STEM-VALVE)
OZ	OUNCE(-S)
P	PIPE
P.C.	POINT OF HORIZONTAL CURVE
PCC	POINT OF COMPOUND CURVE
PCF	POUNDS PER CUBIC FEET
PE	PLAIN END
POLY	POLYETHYLENE
PERIM	PERIMETER
PF	PROFILE
P.I.	POINT OF HORIZONTAL INTERSECTION
P/L	PROPERTY LINE
PL, P	PLATE
P.O.C.	POINT OF CONNECTION
P.O.T	POINT OF TANGENCY
PP	POWER POLE
PR	PAIR
PRESS.	PRESSURE
PRFV	PRESSURE RELIEF VALVE
PRV	PRESSURE REDUCING VALVE
PS	PUMP STATION, PIPE SUPPORT
PROP.	PROPERTY
PSF	POUNDS PER SQUARE FEET
PSI	POUNDS PER SQUARE INCH
P.SL.	PIPE SLEEVE
P.STA.	PUMP STATION
PT	POINT
PV	PLUG VALVE
P.V.C.	POINT OF VERTICAL CURVE
PVC	POLYVINYL CHLORIDE
PVI	POINT OF VERTICAL INTERSECTION
PVT	POINT OF VERTICAL TANGENCY
PVMT	PAVEMENT
PWR	POWER
R	RISER
R, RAD	RADIUS
RC	REINFORCED CONCRETE
RCP	REINFORCED CONCRETE PIPE
RD	ROAD
REF	REFERENCE
REINF	REINFORC(-E, -ED, -ING, -MENT)
REQD	REQUIRED
REQT	REQUIREMENT
REV	REVISION
RH	RIGHT HAND
R/W	RIGHT-OF-WAY
RTE	ROUTE
RT	RIGHT
RR	RAILROAD
RND	ROUND
S	SEWER, SOUTH, SLOPE
SCHED, SCH	SCHEDULE
SD	STORM DRAIN
SE	SOUTHEAST
SEC	SECOND(-S, -ARTY)
SECT	SECTION(-S)
SHT, SH	SHEET
SI	SIDEWALK INLET
SIG	SIGNAL
SIM	SIMILAR
SPCD	SPACED
SPCNG	SPACING
SPCS	SPACES
SPEC	SPECIFICATIONS
SQ	SQUARE
SQ FT, SF	SQUARE FEET
SQ IN	SQUARE INCHES
SS	SANITARY SEWER
SSMH	SANITARY SEWER MANHOLE
SS 304	STAINLESS STEEL TYPE 304
SS 316	STAINLESS STEEL TYPE 316
ST	STREET
STA	STATION
STD	STANDARD
STL	STEEL
STORM, SD	STORM DRAIN
STRUCT	STRUCTUR(-E, -AL)
SUBM	SUBMISSION (SUBMIT)
SUPP	SUPPORT(-S)
SURF.	SURFACE
SW	SOUTHWEST; SWITCH
S/W	SIDEWALK
SYM	SYMMETRICAL
T	TIMER, TIME, THERMOSTAT
T/	TOP OF
TAN.	TANGENT(-IAL)
TB	THRUST BLOCK
TBM	TEMPORARY BENCH MARK
T & B	TOP & BOTTOM
TC	TOP OF CURB
TBM	TEMPORARY BENCH MARK
TEMP	TEMPERATURE, TEMPORARY
TERM.	TERMINAL; TERMINATION
TEL	TELEPHONE
TOC	TOP OF CONCRETE
TOS	TOP OF STEEL
T.O.P.	TOP OF PAVEMENT
TOPO	TOPOGRAPHY
TOS	TOP OF STEEL; TOP OF SLAB
T.O.W.	TOP OF WALL
TYP	TYPICAL
TP	TELEPHONE POLE
UG	UNDERGROUND
UGE	UNDERGROUND ELECTRIC
UNO	UNLESS NOTED OTHERWISE
UPR	UPPER
V	VOLT
VAR	VARIABLE; VARIES
VC	VERTICAL CURVE
VCP	VITRIFIED CLAY PIPE
VERT	VERTICAL
VPI	VERTICAL POINT OF INTERSECTION
W	WIDTH; WIDE; WEST
W/	WITH
WA	WORK AREA
WM, W.M.	WATER METER
WO	WITHOUT
WR	WATER RESOURCE / SIGNIFICANT RIPARIAN CORRIDOR
WS	WELDED STEEL, WATER SURFACE
WT	WEIGHT
WTP	WATER TREATMENT PLANT
WTR	WATER
YD 3	CUBIC YARD
YD 2	SQUARE YARD

NOTE:
THIS IS A GENERALIZED ABBREVIATION SHEET. THIS CONTRACT MAY NOT USE ALL INFORMATION SHOWN.

APPROVED FOR CONSTRUCTION BY
CITY OF WEST LINN
This approval is only for general conformance with the design concept and general compliance with applicable codes and requirements and shall not be construed as relieving the Design Engineer of full responsibility for accuracy and completeness of the drawings. This plan review approval does not prevent the City from requiring further code corrections in the field.
DATE: 5/14/14 BY: Khoi Q. Le

Kennedy/Jenks Consultants
200 SW MARKET, SUITE 500, PORTLAND OREGON 97201

LINE IS 2 INCHES AT FULL SIZE (IF NOT 2" - SCALE ACCORDINGLY)

DESIGNED: SG
DRAWN: DDM
CHECKED: TRM
CHECKED: BM
APPROVED: FN

REVISIONS

REV.	DESCRIPTION	BY	DATE	APP.

THIS DRAWING WAS ORIGINALLY SEALED BY FREDERICK C. NEAL, A REGISTERED PROFESSIONAL ENGINEER IN THE STATE OF OREGON, No. 85267

CONFORMED TO BID DOCUMENTS

Lake Oswego · Tigard Water Partnership
sharing water · connecting communities

SCHEDULE 3 - MAPLETON
GENERAL
ABBREVIATIONS

FILENAME 119101620-3-G-05M
KENNEDY/JENKS PROJECT NUMBER 1191016.20
SCALE AS SHOWN
DRAWING/FIGURE NUMBER 3-G-05M

PLOT DATE: April 16, 2014 - 4:16PM USER: DougM
FILE: N:\2011\1191016.20_LakeOswego_PWR\119101620-3-G-05M.dwg

UTILITY CONTACT LIST

UTILITY AGENCY	CONTACT PERSON	ADDRESS	PHONE NUMBER
Century Link Qwest Communications	Scott Miller	8021 SW Capital Hill Road Portland, OR 97219	(503) 242-0304
City of West Linn	Khoi Le	22500 Salamo Road West Linn, OR 97068	(503) 656-4261
Clearwire Property Services	Site Leasing	6391 Sprint Parkway Overland Park, KS 66251-8000	(855) 342-9679
Comcast #2	Ivan Chandler	11308 SW 68th Parkway Tigard, OR 97223	(503) 596-3754
Crown Castle	Dana Diaconu	8547 154th Avenue Redmond, WA 98052	(425) 202-2764
Integra Telecom	Bob Davidson	1201 NE Lloyd boulevard, Suite 500 Portland, OR 97232	(503) 453-8247
Northwest Natural (West side of Willamette)	Ryan van Gordon	220 NW 2nd Avenue Portland, OR 97209	(503) 226-4211
PGE (Portland General Electric)	Milo Starr	9480 SW Boeckman Road Wilsonville, OR 97070	(503) 570-4414
Sprint Long Distance	Michael Conley	78696 Bryson Sears Road Cottage Grove, OR 97424	(541) 942-7410
Sprint Wireless Erickson Contractor	Jim Crowther	1530 East Roeser Road Phoenix, AZ 85040	(623) 806-8896
Verizon Business Service	Mike Mueller	2550 NW Aloclek Drive Hillsboro, OR 97124	(503) 707-3453

SCHEDULE 3 POTHOLE TABLE

Pothole Number	Drawing Number	Size (IN)	Type	Depth Below Ground Surface to Top of Utility (IN)
P131	3-C-27M	4.5	Gas	54
P134	3-C-31M	4	Sewer Lateral	96
P136	3-C-33M	27	Water	58
P142	3-C-33M	27	Water	54
P143	3-C-33M	27	Water	65

SCH 3 FWP - LINE AND CURVE DATA TABLE
MAPLETON DRIVE

BEGIN STATION	END STATION	RADIUS	LENGTH	DELTA	START	END
435+95.00	443+20.87		725.87		N: 633570.82 E: 7652616.63	N: 633522.68 E: 7653341.10
443+20.87	443+33.94		13.07		N: 633522.68 E: 7653341.10	N: 633516.89 E: 7653352.81
443+33.94	443+99.06		65.13		N: 633516.89 E: 7653352.81	N: 633512.57 E: 7653417.80
443+99.06	446+90.87		291.81		N: 633512.57 E: 7653417.80	N: 633568.61 E: 7653704.17
446+90.87	448+96.33		205.46		N: 633568.61 E: 7653704.17	N: 633587.38 E: 7653908.77
448+96.33	450+29.45		133.13		N: 633587.38 E: 7653908.77	N: 633589.22 E: 7654041.88
450+29.45	453+86.44		356.98		N: 633589.22 E: 7654041.88	N: 633577.94 E: 7654398.69
453+86.44	454+66.81		80.37		N: 633577.94 E: 7654398.69	N: 633578.23 E: 7654479.06
454+66.81	455+27.11		60.30		N: 633578.23 E: 7654479.06	N: 633582.66 E: 7654539.19
455+27.11	455+46.38		19.27		N: 633582.66 E: 7654539.19	N: 633601.93 E: 7654539.44

SCH 3 RWP - LINE AND CURVE DATA TABLE
MAPLETON DRIVE

	BEGIN STATION	END STATION	RADIUS	LENGTH	DELTA	START	END
	10+32.26	10+57.30		25.04		N: 633601.68 E: 7654551.27	N: 633576.62 E: 7654550.94
	10+57.30	12+01.74		144.44		N: 633576.62 E: 7654550.94	N: 633588.70 E: 7654694.87
	12+01.74	14+56.89		255.15		N: 633588.70 E: 7654694.87	N: 633679.27 E: 7654933.41
	14+56.89	15+96.71		139.82		N: 633679.27 E: 7654933.41	N: 633750.30 E: 7655053.64
	15+96.71	16+74.57		77.86		N: 633750.30 E: 7655053.84	N: 633773.16 E: 7655128.26
	16+74.57	19+70.08		295.51		N: 633773.16 E: 7655128.26	N: 633792.14 E: 7655423.16
	19+70.08	20+70.74		100.66		N: 633792.14 E: 7655423.16	N: 633752.32 E: 7655515.62
1	20+70.74	21+17.82		47.08		N: 633752.32 E: 7655515.62	N: 633723.61 E: 7655552.93
	21+17.82	23+65.26		247.44		N: 633723.61 E: 7655552.93	N: 633520.91 E: 7655694.84
	23+65.26	24+60.50		95.23		N: 633520.91 E: 7655694.84	N: 633434.46 E: 7655734.79
2	24+60.50	25+02.24		41.74		N: 633434.46 E: 7655734.79	N: 633393.36 E: 7655742.08
2	25+02.24	25+13.02		10.79		N: 633393.36 E: 7655742.08	N: 633385.46 E: 7655749.42
2	25+13.02	25+15.86		2.84		N: 633385.46 E: 7655749.42	N: 633385.35 E: 7655752.26

APPROVED FOR CONSTRUCTION BY
CITY OF WEST LINN
This approval is only for general conformance with the design concept and general compliance with applicable codes and requirements and shall not be construed as relieving the Design Engineer of full responsibility for accuracy and completeness of the drawings. This plan review approval does not prevent the City from requiring further code corrections in the field.
DATE: 5/14/14 BY: Khoi Q. Le

Kennedy/Jenks Consultants
200 SW MARKET, SUITE 500, PORTLAND OREGON 97201

LINE IS 2 INCHES AT FULL SIZE (IF NOT 2" - SCALE ACCORDINGLY)

DESIGNED: SG
DRAWN: DDM
CHECKED: TRM
CHECKED: BM
APPROVED: FN

REVISIONS

REV.	DESCRIPTION	BY	DATE	APP.
2	ADDENDUM 6-52	FN	02/14/14	
1	ADDENDUM 4-26	SG	02/04/14	FN

THIS DRAWING WAS ORIGINALLY SEALED BY FREDERICK C. NEAL, A REGISTERED PROFESSIONAL ENGINEER IN THE STATE OF OREGON, No. 85267

CONFORMED TO BID DOCUMENTS

Lake Oswego · Tigard Water Partnership
sharing water · connecting communities

SCHEDULE 3 - MAPLETON
GENERAL
POTHOLE DATA TABLE
UTILITY CONTACT LIST AND
LINE AND CURVE TABLE

FILENAME 119101620-3-G-06M
KENNEDY/JENKS PROJECT NUMBER 1191016.20
SCALE AS SHOWN
DRAWING FIGURE NUMBER 3-G-06M

PLOT DATE: April 17, 2014 - 4:46PM USER: CoreinC
FILE: N:\2011\1191016.20_LMO\dwgs_FWM\119101620-3-G-06M.dwg

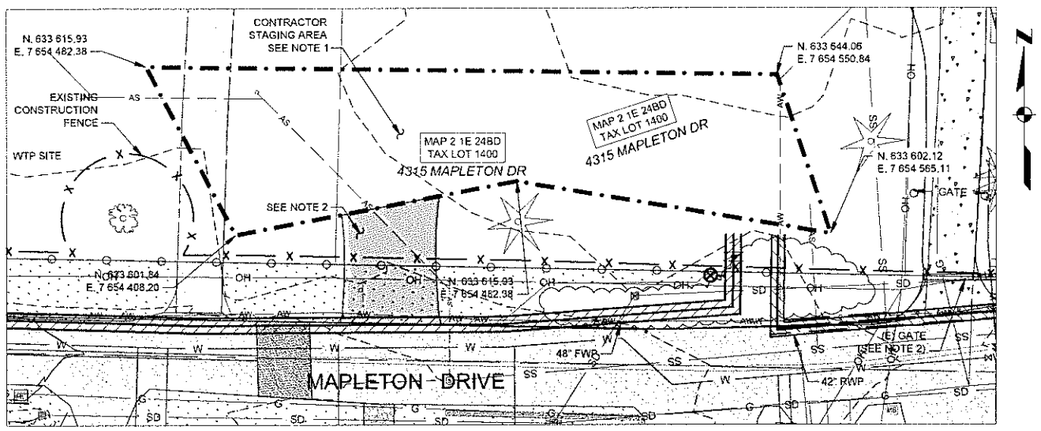

WTP TURNAROUND,STAGING AND STORAGE AREA

0 10 20 30
1"=20'

1
3-C-30M
3-C-31M

NOTES:

1. THIS AREA LOCATED WITHIN THE OWNERS WTP SITE IS AVAILABLE FOR THE STAGING AND STORAGE OF CONSTRUCTION MATERIAL. SEE SECTION 01015 FOR STORAGE AREA ACCESS AND USE CONSTRAINTS.
2. CONTRACTOR SHALL CONSTRUCT NEW FENCE AND GATE AND TEMPORARY DRIVEWAY TO ALLOW FOR CONTRACTOR ACCESS TO THE STAGING AREA. GATE SHALL BE CONSTRUCTED TO MATCH (E) GATE. DESIGN WITH 6' TALL CHAIN LINK FENCING AND PRIVACY FABRIC. OBTAIN A TEMPORARY DRIVEWAY PERMIT FROM THE CITY OF WEST LINN. 1

GENERAL NOTES:

1. UTILITY NOTIFICATION - SEE TITLE SHEET.
2. EXISTING UNDERGROUND FACILITIES: SEE GENERAL CONDITIONS ARTICLE 4.04.
3. PROPERTY AND RIGHT-OF-WAY LINES ARE SHOWN AS AN AID TO DESIGN ONLY. THEY DO NOT IMPLY LEGAL OWNERSHIP BOUNDARIES AND THERE IS NO GUARANTEE, EXPRESSED OR IMPLIED, WITH RESPECT TO THEIR ACCURACY.
4. TRAFFIC CONTROL IN THE RIGHT-OF-WAY SHALL BE IN ACCORDANCE WITH TRAFFIC CONTROL PLANS INCLUDED WITH THESE DRAWINGS AND THE CURRENT EDITIONS OF " MANUAL ON UNIFORM TRAFFIC CONTROL DEVICES" AND OREGON DEPARTMENT OF TRANSPORTATION (ODOT) "MANUAL ON TRAFFIC PRACTICES HANDBOOK FOR LOCAL ROADS AND STREETS IN OREGON".
5. ALL EARTHWORK SHALL BE PERFORMED IN ACCORDANCE WITH APPLICABLE; LAW, INCLUDING OR-OSHA REQUIREMENTS AND LOCAL ORDINANCES.
6. MAINTENANCE OF THE WORK AREA AND APPROACH ROADS IS THE RESPONSIBILITY OF THE CONTRACTOR. THE WORK AREA AND APPROACH ROADS SHALL BE MAINTAINED IN A CLEAN CONDITION, FREE FROM OBSTRUCTIONS AND HAZARDS.
7. EXISTING OVERHEAD POWER AND COMMUNICATION FACILITIES ARE IN THE WORK AREA.
8. EFFECTIVE EROSION CONTROL, DUST CONTROL AND DRAINAGE CONTROL IS REQUIRED AT ALL TIMES. THE CONTRACTOR IS SOLELY RESPONSIBLE FOR PROTECTION OF ALL WORK ADJACENT PROPERTIES AND DOWNSTREAM FACILITIES FROM EROSION AND SILTATION DURING THE COURSE OF THE WORK. ANY DAMAGE RESULTING FROM SUCH EROSION AND SILTATION SHALL BE CORRECTED AT THE SOLE EXPENSE OF THE CONTRACTOR.
9. THE CONTRACTOR SHALL INSTALL AND MAINTAIN ALL EROSION CONTROL MEASURES IN ACCORDANCE WITH THE EROSION AND SEDIMENT CONTROL PLANS INCLUDED IN THE CONTRACT DOCUMENTS.
10. THE IMPLEMENTATION OF THE EROSION AND SEDIMENT CONTROL PLAN AND THE CONSTRUCTION, MAINTENANCE, REPLACEMENT, AND UPGRADING OF EROSION AND SEDIMENT CONTROL FACILITIES IS THE RESPONSIBLY OF THE CONTRACTOR UNTIL ALL CONSTRUCTION IS COMPLETED AND APPROVED AND VEGETATION/LANDSCAPE IS ESTABLISHED.
11. DURING THE CONSTRUCTION PERIOD, NO DISTURBANCE BEYOND THE WORK AREA BOUNDARY SHALL BE PERMITTED (EXCEPT PIPELINE APPURTENANCES SHOWN BEYOND THESE LIMITS AND FOR TEMPORARY TRAFFIC CONTROL FACILITIES). IF A WORK AREA BOUNDARY IS NOT SHOWN, THEN THE WORK AREA BOUNDARY SHALL BE TO THE EDGE OF THE EXISTING PAVEMENT OR NO FURTHER THAN 8 FEET FROM THE CENTERLINE OF THE PIPELINE UNDER CONSTRUCTION, WHICHEVER IS FURTHER. EXISTING LANDSCAPING AND OTHER IMPROVEMENTS, IF DISTURBED, SHALL BE RESTORED TO EXISTING CONDITIONS. UNDER NO CIRCUMSTANCES SHALL DISTURBANCE EXTEND BEYOND THE PUBLIC RIGHT-OF-WAY OR EASEMENT BOUNDARY.
12. CONTRACTOR SHALL INSTALL TEMPORARY SITE SECURITY FENCING ADJACENT TO ACTIVE WORK ZONES TO PROVIDE BOTH SITE SECURITY AND PUBLIC SAFETY FUNCTIONS FOR ALL WORK PERFORMED ON MAPLETON DR.
13. ALL PIPE JOINTS (INCLUDING VALVES AND FITTINGS) SHALL BE RESTRAINED.
14. SEE DWG 3-C-74M FOR TRENCH SECTIONS.
15. FWP AND RWP PROFILES SHOWN ARE SCHEMATIC – PIPE SHALL SLOPE CONTINUOUSLY UP TO CAV ASSEMBLIES AND CONTINUOUSLY DOWN TO DRAIN ASSEMBLIES.
16. NOT USED
17. EXISTING UTILITIES DESIGNATED WITH AN ASTERISK (*) IN THE PROFILE: THE DEPTHS OF THESE UTILITIES (SERVICE LATERALS) HAVE NOT BEEN MEASURED; THE DEPTHS SHOWN ARE APPROXIMATE ONLY.
18. CONTRACTOR SHALL PROTECT EXISTING TREES PER SECTION 02231 - TREE PROTECTION AND TRIMMING AND ARBORIST FIGURES FOUND IN APPENDIX D OF THE CONTRACT DOCUMENT.
19. MAILBOXES LOCATED WITHIN THE WORK AREA SHALL BE TEMPORARILY RELOCATED PRIOR TO CONSTRUCTION AND REINSTALLED IN ORIGINAL LOCATION ONCE CONSTRUCTION THROUGH THE EFFECTED PROPERTY IS COMPLETE.

SURVEY CONTROL NOTES

1. COORDINATES, BEARINGS AND DISTANCES ARE BASED ON THE OREGON STATE PLANE COORDINATE SYSTEM, NORTH ZONE 3601. CONTROL NETWORK ESTABLISHED BY STATIC GPS SESSIONS, HOLDING THE PUBLISHED VALVE FOR NGS STATION "SYLVAN RESET".
2. THE FOLLOWING TABLE LISTS THE NAD83 GEOID 2003 INTERNATIONAL FEET, NGVD 1929 DATAM BENCHMARKS THAT WERE USED AS THE PRIMARY CONTROL FOR BASIS OF ELEVATION FOR THE SCHEDULE 3 PIPELINE DESIGN. CONTRACTOR SHALL HOLD TO THE PRIMARY CONTROL POINTS INCLUDED IN THE TABLE BELOW IN THE CASE OF ANY DISCREPANCY.

PRIMARY CONTROL POINT	NORTHING	EASTING	ELEVATION (FT)	DESCRIPTION
3	638351.09	7649324.25	191.10	FOUND BRASS DISK
4	635741.68	7651177.87	178.83	FOUND BRASS DISK
7	639797.91	7648194.25	199.33	SET MAG NAIL
11	634827.88	7651851.77	180.31	SET BRASS SCREW
12	635296.07	7651503.13	179.43	SET BRASS SCREW
16	639133.86	7648617.43	193.35	SET BRASS SCREW
17	641591.54	7647397.02	185.22	SET IRON ROD W/ RED CAP

3. PIPE ALIGNMENT DATA IS FOR PIPE CENTERLINE

APPROVED FOR CONSTRUCTION BY
CITY OF WEST LINN
This approval is only for general conformance with the design concept and general compliance with applicable codes and requirements and shall not be construed as relieving the Design Engineer of full responsibility for accuracy and completeness of the drawings. This plan review approval does not prevent the City from requiring further code corrections in the field.
DATE: 5/14/14 BY: Khoi Q. Le

Kennedy/Jenks Consultants
200 SW MARKET, SUITE 500, PORTLAND OREGON 97201

LINE IS 2 INCHES AT FULL SIZE (IF NOT 2" - SCALE ACCORDINGLY)
DESIGNED: SG
DRAWN: DDM
CHECKED: TRM
CHECKED: BM
APPROVED: FN

REVISIONS

REV.	DESCRIPTION	BY	DATE	APP.
1	ADDENDUM NO 4-27	FN	02/04/14	

THIS DRAWING WAS ORIGINALLY SEALED BY FREDERICK C. NEAL, A REGISTERED PROFESSIONAL ENGINEER IN THE STATE OF OREGON, No. 85267

CONFORMED TO BID DOCUMENTS

Lake Oswego · Tigard Water Partnership
sharing water · connecting communities

SCHEDULE 3 - MAPLETON
GENERAL
GENERAL NOTES AND STAGING AREA

FILENAME 119101620-3-G-07M
KENNEDY/JENKS PROJECT NUMBER 1191016.20
SCALE AS SHOWN
DRAWING/FIGURE NUMBER 3-G-07M

PLOT DATE: April 17, 2014 - 4:48PM USER: CorrenC
FILE: N:\2011\1191016.20_LakeOswego_FWM\119101620-3-G-07M.dwg

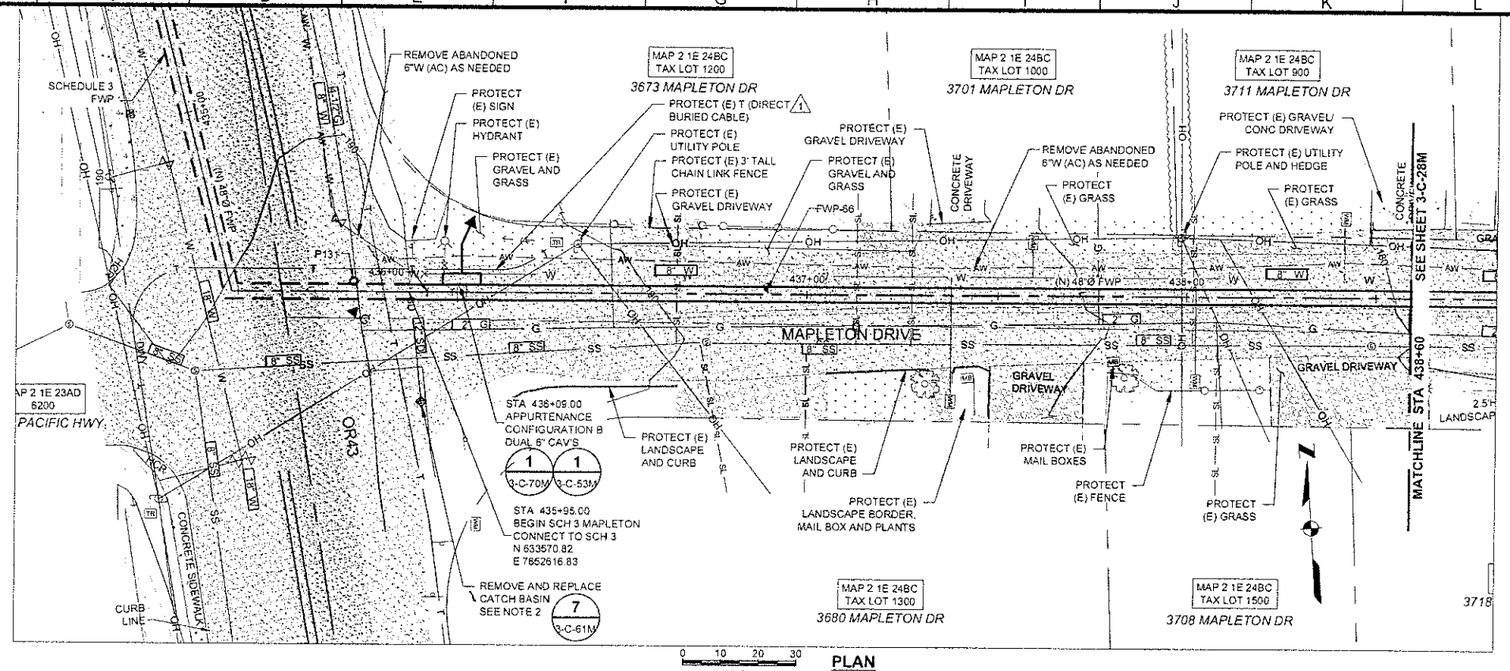

PLAN

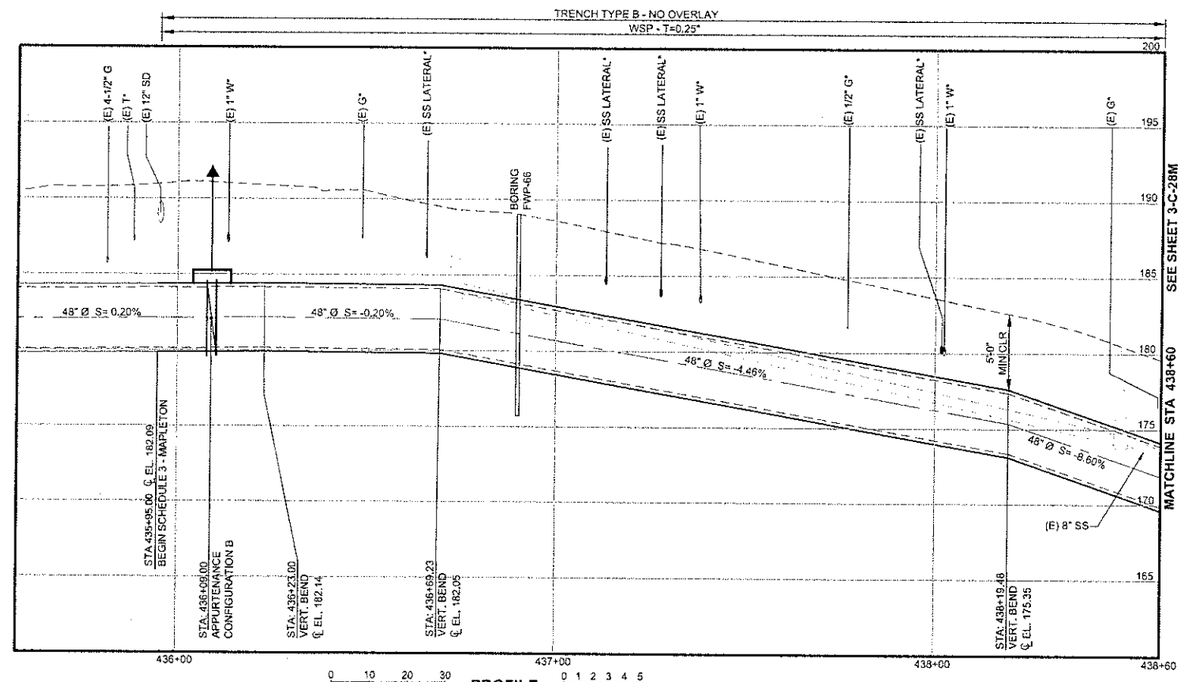

PROFILE

NOTES:

1. THE CITY OF WEST LINN INTENDS TO CONSTRUCT THE 8" W (SHOWN) AND ABANDON THE 6" W (SHOWN AS "ABANDONED" OR "AW") PRIOR TO FWP CONSTRUCTION. THE CITY ALSO INTENDS TO CONSTRUCT NEW WATER LATERALS (SHOWN) AND ABANDON EXISTING LATERALS (NOT SHOWN). NEW LATERALS ARE 1" DIA COPPER; PORTIONS OF NEW LATERALS (THAT WILL BE CROSSED BY THE FWP) WILL BE INSTALLED IN A 2" DIA PVC SLEEVE. CONTRACTOR SHALL PROTECT NEW 8" W AND LATERALS. ABANDONED 6"W AND LATERALS MAY BE DEMOLISHED. SEE SPECIFICATION SECTION 02050 FOR REMOVAL REQUIREMENTS. (1)
2. INSTALL (N) CATCH BASIN WITH THE RIM HIGHER THAN (E) CATCH BASIN TO MINIMIZE THE PAVEMENT DEPRESSION CURRENTLY SURROUNDING (E) CATCH BASIN, AS DIRECTED BY THE ENGINEER; RESTORE PAVEMENT. NOTE THAT A BURIED CONCRETE VALVE VAULT (ABANDONED AND BACKFILLED) IS REPORTEDLY IMMEDIATELY WEST OF THE CATCH BASIN.

APPROVED FOR CONSTRUCTION BY
CITY OF WEST LINN
This approval is only for general conformance with the design concept and general compliance with applicable codes and requirements and shall not be construed as relieving the Design Engineer of full responsibility for accuracy and completeness of the drawings. This plan review approval does not prevent the City from requiring further code corrections in the field.
DATE 5/14/14 BY: Khoi Q. Le

Kennedy/Jenks Consultants
200 SW MARKET, SUITE 500, PORTLAND OREGON 97201

LINE IS 2 INCHES AT FULL SIZE (IF NOT 2" - SCALE ACCORDINGLY)

DESIGNED: SG
DRAWN: DDM
CHECKED: TRM
CHECKED: BM
APPROVED: FN

REVISIONS

REV.	DESCRIPTION	BY	DATE	APP.
2	ADDENDUM NO 6-53 ENTIRE DRAWING	SG	02/14/14	FN
1	ADDENDUM NO 4-28 ENTIRE DRAWING	SG	02/03/14	FN

THIS DRAWING WAS ORIGINALLY SEALED BY FREDERICK C. NEAL, A REGISTERED PROFESSIONAL ENGINEER IN THE STATE OF OREGON, No. 85267 (2)

CONFORMED TO BID DOCUMENTS

Lake Oswego · Tigard Water Partnership
sharing water · connecting communities

SCHEDULE 3 - MAPLETON
CIVIL
FINISHED WATER PLAN AND PROFILE
STA 435+95 TO 438+60
MAPLETON DRIVE

FILENAME 1191016 20-3-C-27M
KENNEDY/JENKS PROJECT NUMBER 1191016.20
SCALE AS SHOWN
DRAWING/FIGURE NUMBER 3-C-27M

PLOT DATE April 16, 2014 - 4:26PM TRSH DwgM
FILE N:\2011\1191016.20_LakeOswego_FwWs\1191016.20-3-C-27M.dwg

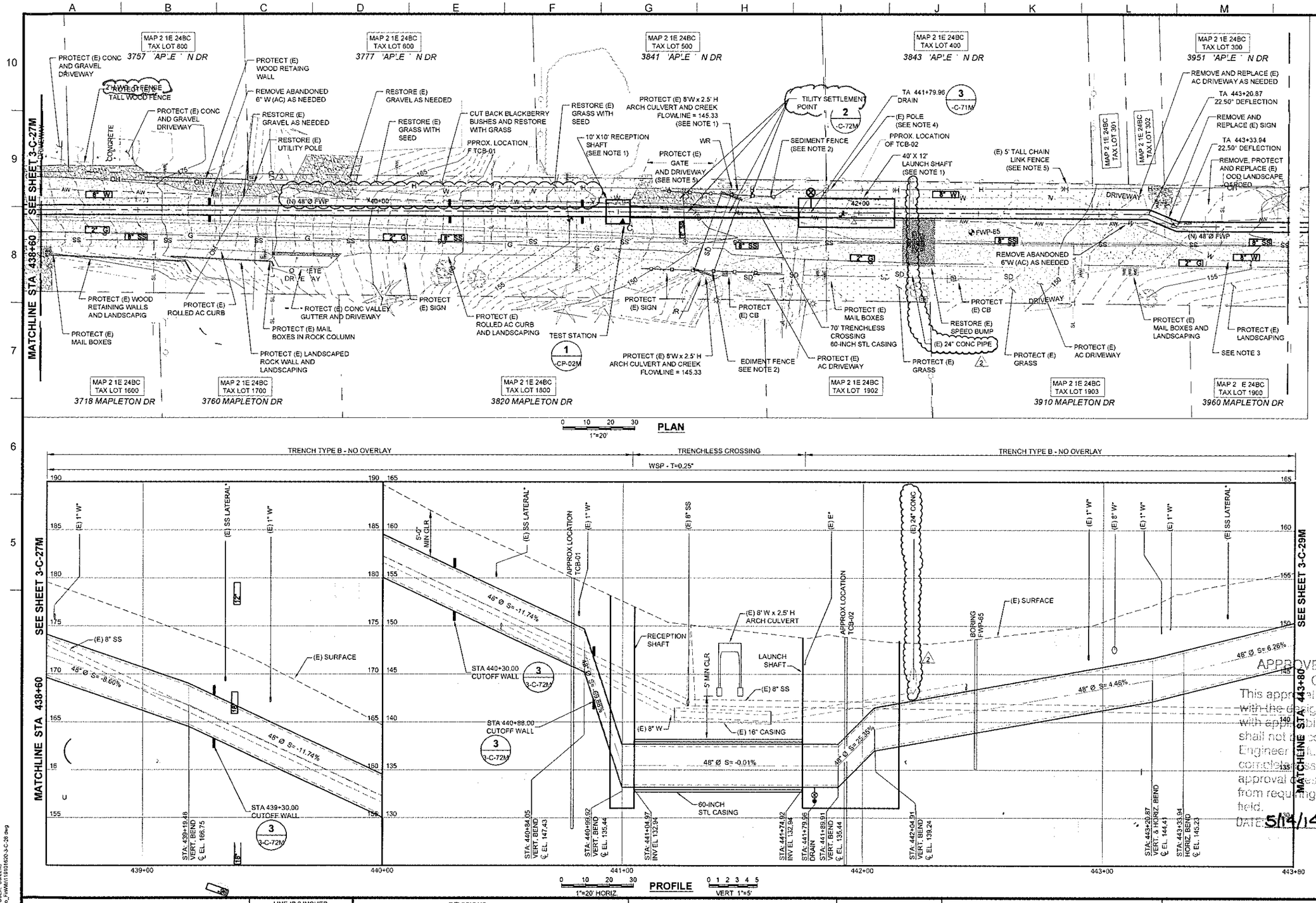

NOTES:

1. CONTRACTOR TO DETERMINE DIMENSION OF THE SHAFTS, WITHIN THE APPROXIMATE LIMITS SHOWN.
2. FOR SEDIMENT FENCE DETAIL SEE DRAWING 3-EC-01 FOUND IN THE EROSION AND SEDIMENT CONTROL PLANS AS APPENDIX C.2 OF THE CONTRACT DOCUMENTS.
3. THE CITY OF WEST LINN INTENDS TO CONSTRUCT THE 8" W (SHOWN) AND ABANDON THE 6" W (SHOWN AS "ABANDONED" OR "AW") PRIOR TO FWP CONSTRUCTION. THE CITY ALSO INTENDS TO CONSTRUCT NEW WATER LATERALS (SHOWN) AND ABANDON EXISTING LATERALS (NOT SHOWN). NEW LATERALS ARE 1" DIA COPPER; PORTIONS OF NEW LATERALS (THAT WILL BE CROSSED BY THE FWP) WILL BE INSTALLED IN A 2" DIA PVC SLEEVE. CONTRACTOR SHALL PROTECT NEW 8" W AND LATERALS. ABANDONED 6" W AND LATERALS MAY BE DEMOLISHED. SEE SPECIFICATION SECTION 02050 FOR REMOVAL REQUIREMENTS. 1
4. CONTRACTOR SHALL COORDINATE WITH PGE TO PROTECT/ RELOCATE THE EXISTING UTILITY POLE, OVERHEAD LINES AND UNDERGROUND ELECTRICAL LINES FOR TRENCHLESS CONSTRUCTION ACTIVITIES.
5. THE WORK AREA BOUNDARY LOCATED BETWEEN THE EDGE OF PAVEMENT AND THE EXISTING FENCE FROM APPROXIMATE STATION 439+91 TO STATION 442+97 IS AVAILABLE FOR CONTRACTOR USE; HOWEVER THE EXISTING DRIVEWAY SHALL NOT BE USED FOR STORAGE OR STAGING AND THE EXISTING CREEK SHALL BE PROTECTED AT ALL TIMES. CONTRACTOR SHALL PROTECT THE EXISTING FENCE AND DRIVEWAY, AND RESTORE THE EXISTING GRASS AREAS WITH SEED.

APPROVED FOR CONSTRUCTION BY
CITY OF WEST LINN
This approval is only for general conformance with the design concept and general compliance with applicable codes and requirements and shall not be construed as relieving the Design Engineer of full responsibility for accuracy and completeness of the drawings. This plan review approval does not prevent the City from requiring further code corrections in the field.
DATE: 5/14/14 BY: Khri Q. K

Kennedy/Jenks Consultants
200 SW MARKET, SUITE 500, PORTLAND OREGON 97201

LINE IS 2 INCHES AT FULL SIZE (IF NOT 2" - SCALE ACCORDINGLY)

DESIGNED: SG
DRAWN: DDM
CHECKED: TRM
CHECKED: BM
APPROVED: FN

REVISIONS

REV.	DESCRIPTION	BY	DATE	APP.
3	WEST LINN AS-BUILT MODIFICATION	FN	04/22/14	FN
2	ADDENDUM 4-30	FN	02/04/14	
1	ADDENDUM 4-29	FN	02/04/14	FN

THIS DRAWING WAS ORIGINALLY SEALED BY FREDERICK C. NEAL, A REGISTERED PROFESSIONAL ENGINEER IN THE STATE OF OREGON, No. 85267

CONFORMED TO BID DOCUMENTS

Lake Oswego · Tigard Water Partnership
sharing water · connecting communities

SCHEDULE 3 - MAPLETON
CIVIL
FINISHED WATER PLAN AND PROFILE
STA 438+60 TO 443+80
MAPLETON DRIVE

FILENAME 119101620-3-C-28
KENNEDY/JENKS PROJECT NUMBER 1191016.20
SCALE AS SHOWN
DRAWING FIGURE NUMBER 3-C-28M

PLOT DATE: April 23, 2014 - 4:54PM USER: CoreinC
FILE: N:\0011\119101620_LakeOswego_PWB\119101620-3-C-28.dwg

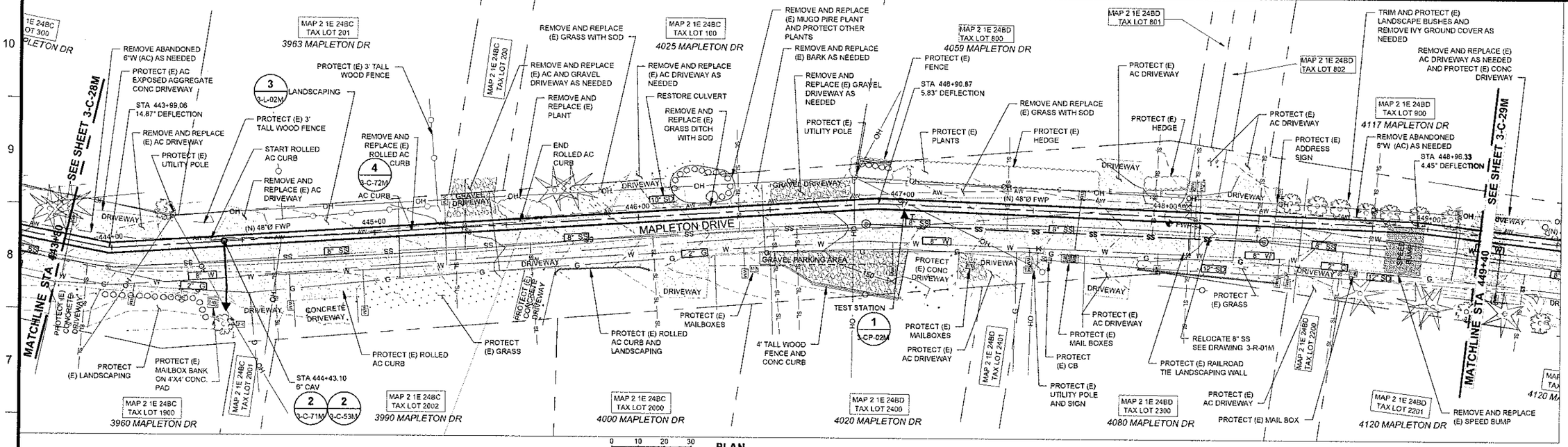

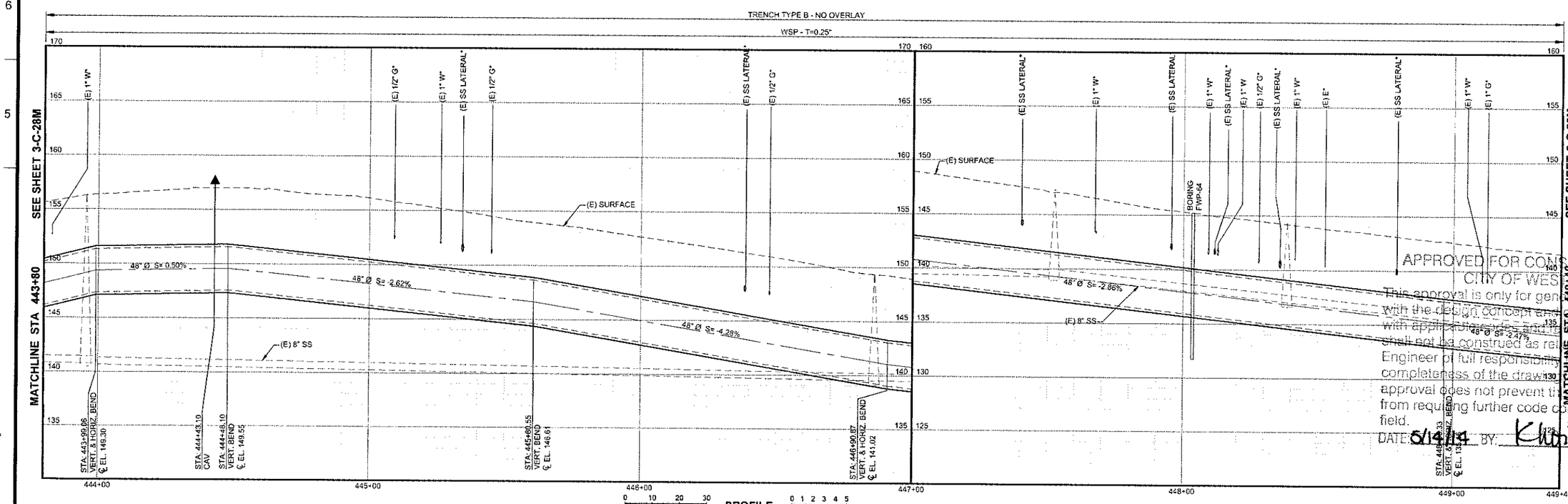

NOTES:

1. THE CITY OF WEST LINN INTENDS TO CONSTRUCT THE 8" W (SHOWN) AND ABANDON THE 6" W (SHOWN AS "ABANDONED" OR "AW") PRIOR TO FWP CONSTRUCTION. THE CITY ALSO INTENDS TO CONSTRUCT NEW WATER LATERALS (SHOWN) AND ABANDON EXISTING LATERALS (NOT SHOWN). NEW LATERALS ARE 1" DIA COPPER; PORTIONS OF NEW LATERALS (THAT WILL BE CROSSED BY THE FWP) WILL BE INSTALLED IN A 2" DIA PVC SLEEVE. CONTRACTOR SHALL PROTECT NEW 8" W AND LATERALS. ABANDONED 6"W AND LATERALS MAY BE DEMOLISHED. SEE SPECIFICATION SECTION 02050 FOR REMOVAL REQUIREMENTS. 1

APPROVED FOR CONSTRUCTION BY CITY OF WEST LINN
This approval is only for general conformance with the design concept and general compliance with applicable codes and requirements and shall not be construed as relieving the Design Engineer of full responsibility for accuracy and completeness of the drawings. This plan review approval does not prevent the City from requiring further code corrections in the field.
DATE: 5/14/14 BY: Kim C. K

Kennedy/Jenks Consultants
200 SW MARKET, SUITE 500, PORTLAND OREGON 97201

LINE IS 2 INCHES AT FULL SIZE (IF NOT 2" - SCALE ACCORDINGLY)

DESIGNED: SG
DRAWN: DDM
CHECKED: TRM
CHECKED: BM
APPROVED: FN

REVISIONS

REV.	DESCRIPTION	BY	DATE	APP.
1	ADDENDUM NO 4-31	FN	02/04/14	

THIS DRAWING WAS ORIGINALLY SEALED BY FREDERICK C. NEAL, A REGISTERED PROFESSIONAL ENGINEER IN THE STATE OF OREGON, No. 85267

CONFORMED TO BID DOCUMENTS

Lake Oswego · Tigard Water Partnership
sharing water · connecting communities

SCHEDULE 3 - MAPLETON
CIVIL
FINISHED WATER PLAN AND PROFILE
STA 443+80 TO 449+40
MAPLETON DRIVE

FILENAME 119101620-3-C-29
KENNEDY/JENKS PROJECT NUMBER 1191016.20
SCALE AS SHOWN
DRAWING/FIGURE NUMBER 3-C-29M

PLOT DATE: April 15, 2014 - 4:39PM USER: DougM
FILE: N:\2011\1191016.20_LakeOswego_FwWs\119101620-3-C-29.dwg

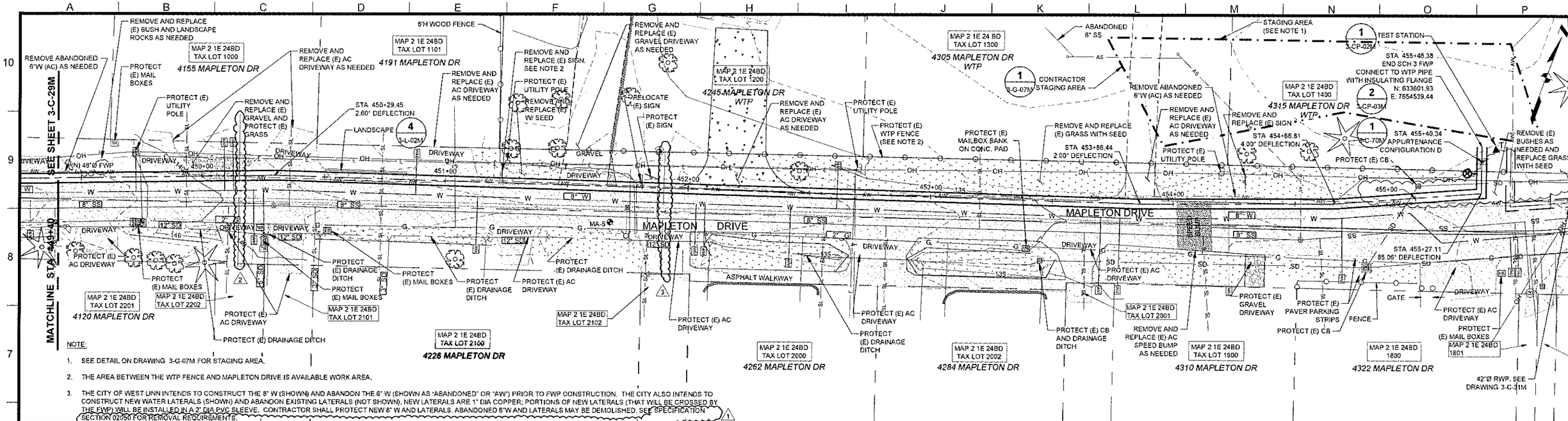

NOTE:

1. SEE DETAIL ON DRAWING 3-G-07M FOR STAGING AREA.
2. THE AREA BETWEEN THE WTP FENCE AND MAPLETON DRIVE IS AVAILABLE WORK AREA.
3. THE CITY OF WEST LINN INTENDS TO CONSTRUCT THE 8" W (SHOWN) AND ABANDON THE 6" W (SHOWN AS "ABANDONED" OR "AW") PRIOR TO FWP CONSTRUCTION. THE CITY ALSO INTENDS TO CONSTRUCT NEW WATER LATERALS (SHOWN) AND ABANDON EXISTING LATERALS (NOT SHOWN). NEW LATERALS ARE 1" DIA COPPER; PORTIONS OF NEW LATERALS (THAT WILL BE CROSSED BY THE FWP) WILL BE INSTALLED IN A 2" DIA PVC SLEEVE. CONTRACTOR SHALL PROTECT NEW 8" W AND LATERALS. ABANDONED 6"W AND LATERALS MAY BE DEMOLISHED. SEE SPECIFICATION SECTION 02050 FOR REMOVAL REQUIREMENTS. 1

0 10 20 30
1"=20'
PLAN

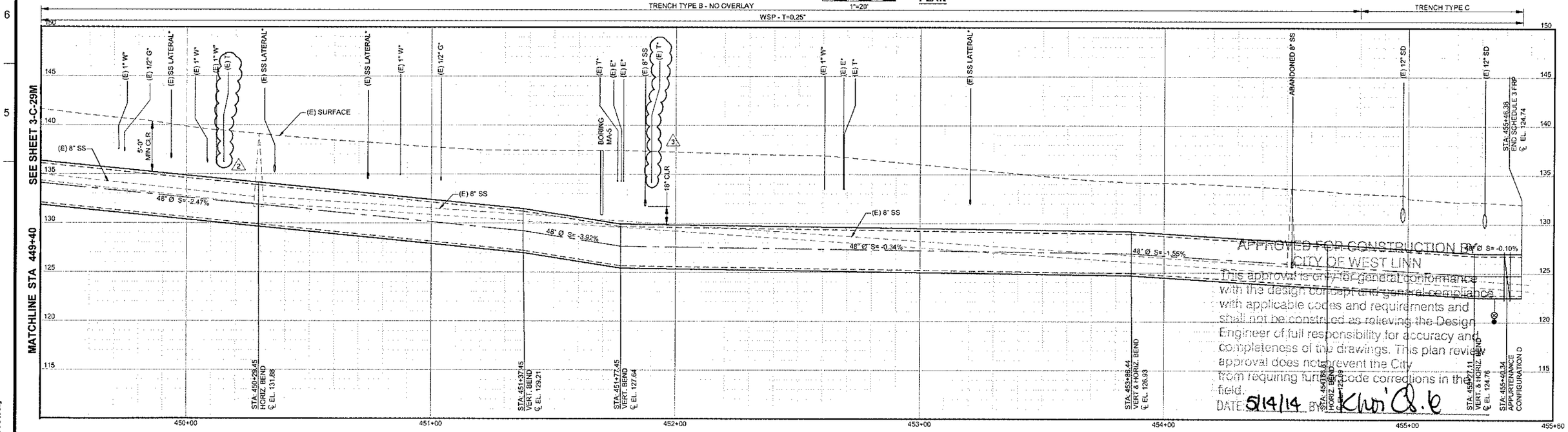

APPROVED FOR CONSTRUCTION BY
CITY OF WEST LINN
This approval is only for general conformance with the design concept and general compliance with applicable codes and requirements and shall not be construed as relieving the Design Engineer of full responsibility for accuracy and completeness of the drawings. This plan review approval does not prevent the City from requiring further code corrections in the field.
DATE: 5/14/14 BY: Khri Q.E

0 10 20 30
1"=20' HORIZ.
PROFILE
0 1 2 3 4 5
VERT 1"=5'

LINE IS 2 INCHES AT FULL SIZE (IF NOT 2" - SCALE ACCORDINGLY)	
DESIGNED:	SG
DRAWN:	CDM
CHECKED:	TRM
CHECKED:	BM
APPROVED:	FN

REVISIONS

REV.	DESCRIPTION	BY	DATE	APP.
3	ADDENDUM 4-34	FN	02/04/14	
2	ADDENDUM 4-33	FN	02/04/14	
1	ADDENDUM 4-32	FN	02/04/14	FN

Kennedy/Jenks Consultants
200 SW MARKET, SUITE 500, PORTLAND OREGON 97201

THIS DRAWING WAS ORIGINALLY SEALED BY FREDERICK C. NEAL, A REGISTERED PROFESSIONAL ENGINEER IN THE STATE OF OREGON, No. 85267

CONFORMED TO BID DOCUMENTS

Lake Oswego · Tigard Water Partnership
sharing water · connecting communities

SCHEDULE 3 - MAPLETON
CIVIL
FINISHED WATER PLAN AND PROFILE
STA 449+40 TO 455+46
MAPLETON DRIVE

FILENAME 11910162O-3-C-30
KENNEDY/JENKS PROJECT NUMBER 1191016.20
SCALE AS SHOWN
DRAWING/FIGURE NUMBER 3-C-30M
11 OF 35

PLOT DATE: April 18, 2014 - 9:46AM USER: CraigC
FILE: N:\30\1191016.20_LakeOswego_pWWT\11910162O-3-C-30.dwg

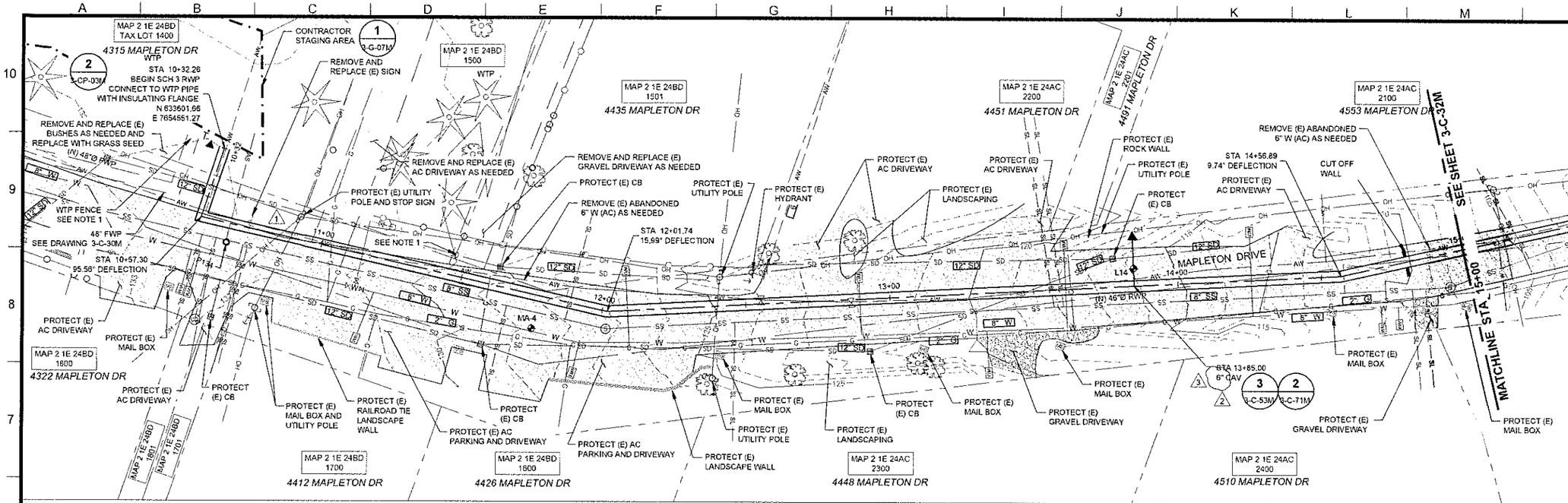

PLAN

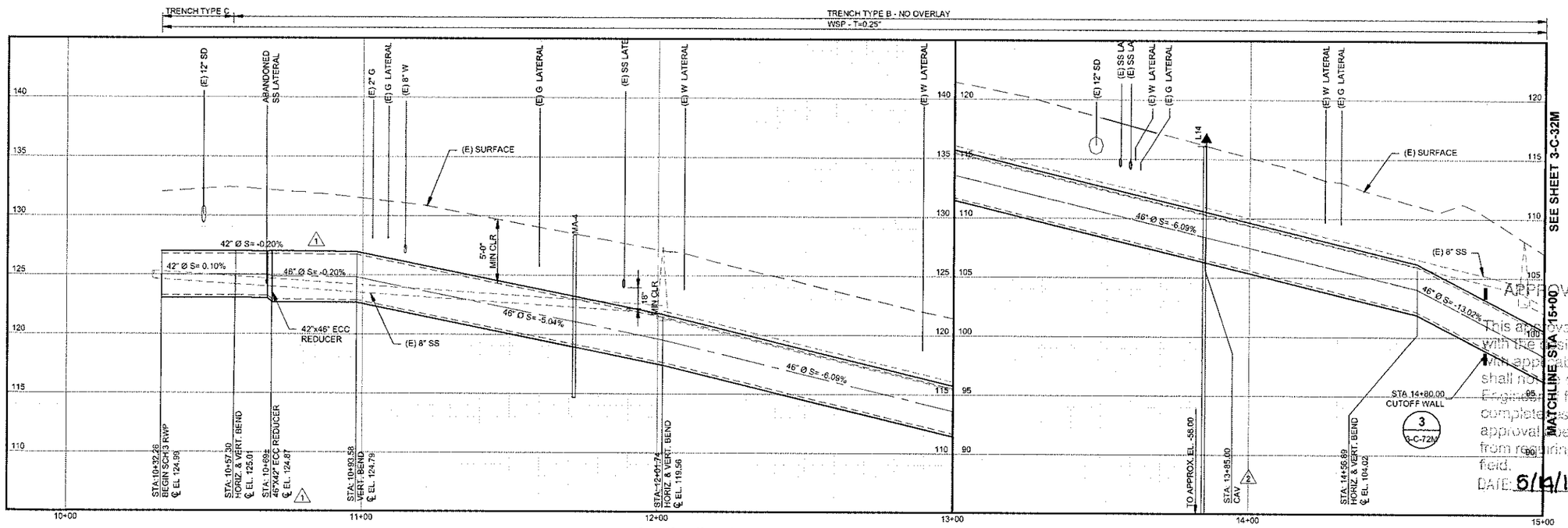

PROFILE

NOTES:

1. THE AREA BETWEEN THE WTP FENCE AND MAPLETON DRIVE IS AVAILABLE WORK AREA.
2. THE CITY OF WEST LINN INTENDS TO CONSTRUCT THE 8" W (SHOWN) AND ABANDON THE 6" W (SHOWN AS "ABANDONED OR "AW") PRIOR TO RWP CONSTRUCTION. THE CITY ALSO INTENDS TO CONSTRUCT NEW WATER LATERALS (SHOWN) AND ABANDON EXISTING LATERALS (NOT SHOWN). NEW LATERALS ARE 1" DIA COPPER. PORTIONS OF NEW LATERALS (THAT WILL BE CROSSED BY THE RWP) WILL BE INSTALLED IN A 2" DIA PVC SLEEVE. CONTRACTOR SHALL PROTECT NEW 8" W AND LATERALS. ABANDONED 6"W AND LATERALS MAY BE DEMOLISHED. SEE SPECIFICATION 02050 FOR REMOVAL REQUIREMENTS. (1)

APPROVED FOR CONSTRUCTION BY CITY OF WEST LINN
This approval is only for general conformance with the design concept and general compliance with applicable codes and requirements and shall not be construed as relieving the Design Engineer of full responsibility for accuracy and completeness of the drawings. This plan review approval does not prevent the City from requiring further code corrections in the field.
DATE: 5/14/14 BY: Khoi Q. Le

Kennedy/Jenks Consultants
200 SW MARKET, SUITE 500, PORTLAND OREGON 97201

LINE IS 2 INCHES AT FULL SIZE (IF NOT 2" - SCALE ACCORDINGLY)
DESIGNED: SG
DRAWN: ODM
CHECKED: TRM
CHECKED: BM
APPROVED: FN

REVISIONS

REV.	DESCRIPTION	BY	DATE	APP.
3	ADDENDUM NO 9-34	FN	02/14/14	
2	ADDENDUM NO 6-54 ENTIRE DRAWING	SG	02/14/14	FN
1	ADDENDUM NO 4-35 ENTIRE DRAWING	SG	02/03/14	FN

THIS DRAWING WAS ORIGINALLY SEALED BY FREDERICK C. NEAL, A REGISTERED PROFESSIONAL ENGINEER IN THE STATE OF OREGON, No. 85267

CONFORMED TO BID DOCUMENTS

Lake Oswego · Tigard Water Partnership
sharing water · connecting communities

SCHEDULE 3 - MAPLETON
CIVIL
RAW WATER PLAN AND PROFILE
STA 10+32 TO 15+00
MAPLETON DRIVE

FILENAME 119101620-3-C-31M
KENNEDY/JENKS PROJECT NUMBER 1191015.20
SCALE AS SHOWN
DRAWING/FIGURE NUMBER 3-C-31M

PLOT DATE: April 16, 2014 - 4:43PM USER: DoughM
FILE: N:\2011\1191016\20_LakeOswego_FirWs\119101620-3-C-31M.dwg

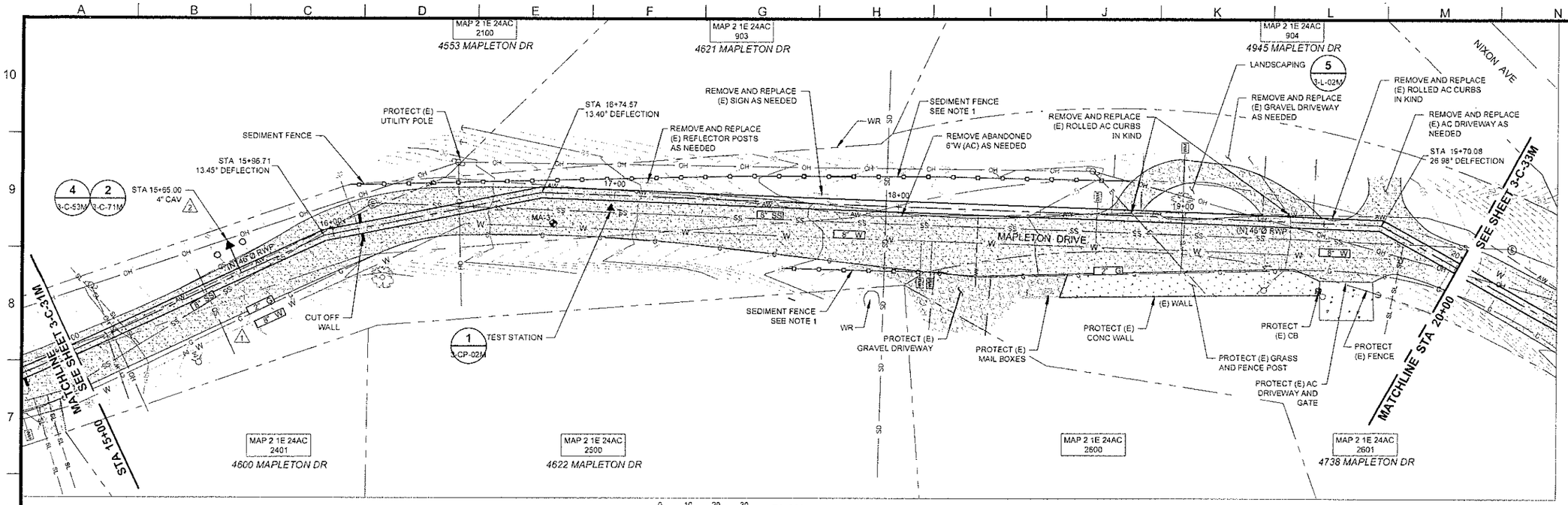

0 10 20 30
1"=20'

PLAN

NOTES:

1. FOR SEDIMENT FENCE DETAIL SEE DRAWING 3-EC-01 FOUND IN THE EROSION AND SEDIMENT CONTROL PLANS AS APPENDIX C.2 OF THE CONTRACT DOCUMENTS.
2. THE CITY OF WEST LINN INTENDS TO CONSTRUCT THE 8" W (SHOWN) AND ABANDON THE 6" W (SHOWN AS "ABANDONED" OR "AW") PRIOR TO RWP CONSTRUCTION. THE CITY ALSO INTENDS TO CONSTRUCT NEW WATER LATERALS (SHOWN) AND ABANDON EXISTING LATERALS (NOT SHOWN). NEW LATERALS ARE 1" DIA COPPER; PORTIONS OF NEW LATERALS (THAT WILL BE CROSSED BY THE RWP) WILL BE INSTALLED IN A 2" DIA PVC SLEEVE. CONTRACTOR SHALL PROTECT NEW 8" W AND LATERALS. ABANDONED 6"W AND LATERALS MAY BE DEMOLISHED. SEE SPECIFICATION SECTION 02050 FOR REMOVAL REQUIREMENTS. (1)

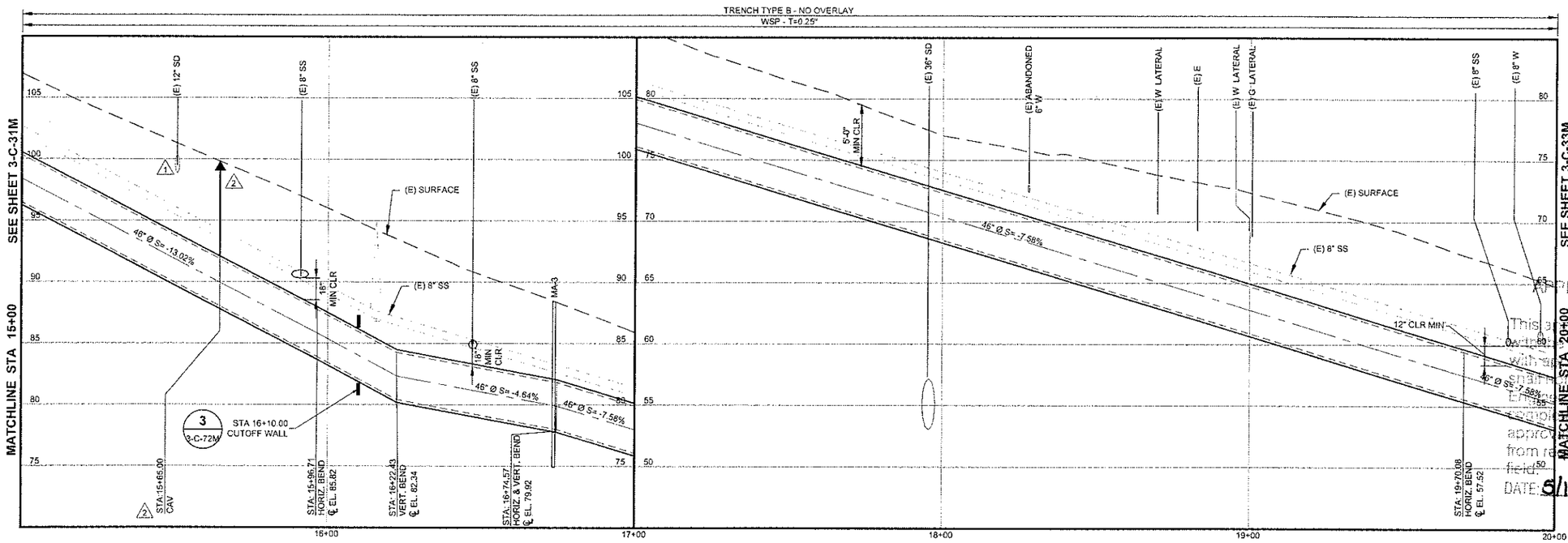

0 10 20 30
1"=20' HORIZ.

PROFILE

0 1 2 3 4 5
VERT 1"=5'

APPROVED FOR CONSTRUCTION BY CITY OF WEST LINN
This approval is only for general conformance with the design concept and general compliance with applicable codes and requirements and shall not be construed as relieving the Design Engineer of full responsibility for accuracy and completeness of the drawings. This plan review approval does not prevent the City from requiring further code corrections in the field.
DATE: 5/14/14 BY: Khoi Q. Le

Kennedy/Jenks Consultants
200 SW MARKET, SUITE 500, PORTLAND OREGON 97201

LINE IS 2 INCHES AT FULL SIZE (IF NOT 2" - SCALE ACCORDINGLY)

DESIGNED: SG
DRAWN: DDM
CHECKED: TRM
CHECKED: BM
APPROVED: FN

REVISIONS

REV.	DESCRIPTION	BY	DATE	APP.
2	ADDENDUM NO 5-55 ENTIRE DRAWING	SG	02/14/14	FN
1	ADDENDUM NO 4-36 ENTIRE DRAWING	SG	02/03/14	FN

THIS DRAWING WAS ORIGINALLY SEALED BY FREDERICK C. NEAL, A REGISTERED PROFESSIONAL ENGINEER IN THE STATE OF OREGON, No. 85267

CONFORMED TO BID DOCUMENTS

Lake Oswego · Tigard Water Partnership
sharing water · connecting communities

SCHEDULE 3 - MAPLETON
CIVIL
RAW WATER PLAN AND PROFILE STA 15+00 TO 20+00
MAPLETON DRIVE

FILENAME 119101610-3-C-32
KENNEDY/JENKS PROJECT NUMBER 1191016.20
SCALE AS SHOWN
DRAWING/FIGURE NUMBER 3-C-32M

PLOT DATE: April 16, 2014 - 4:42PM USER: DougM
FILE: H:\2011\1191016.20_LakeOswego_Fe\Wk1\119101610-3-C-32.dwg

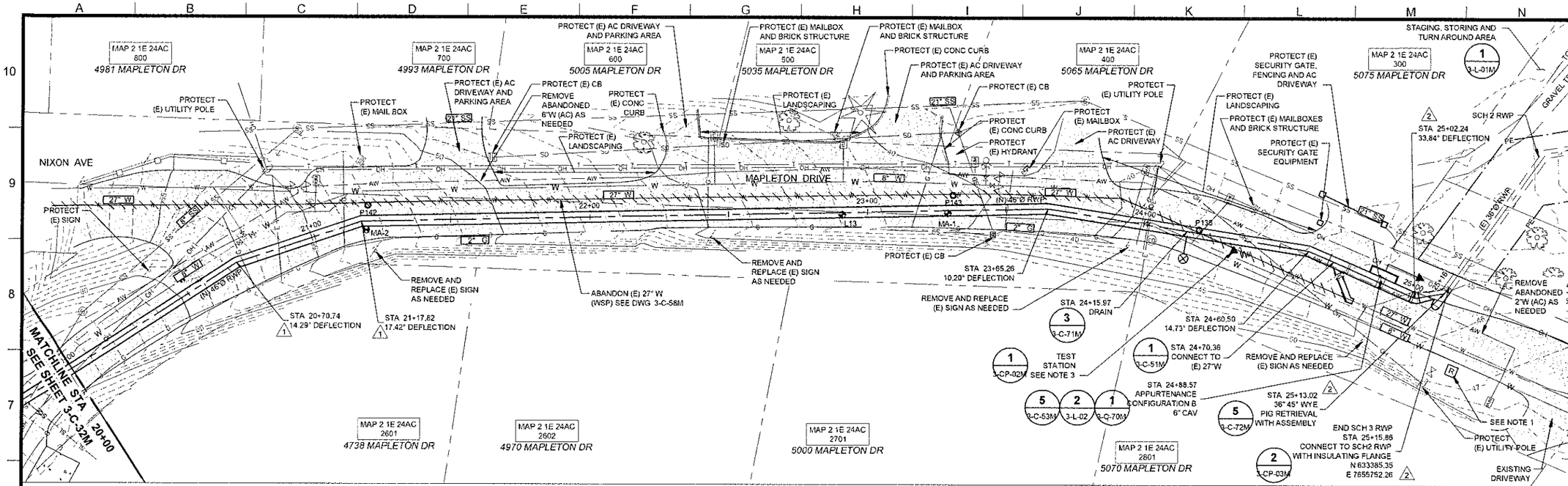

PLAN

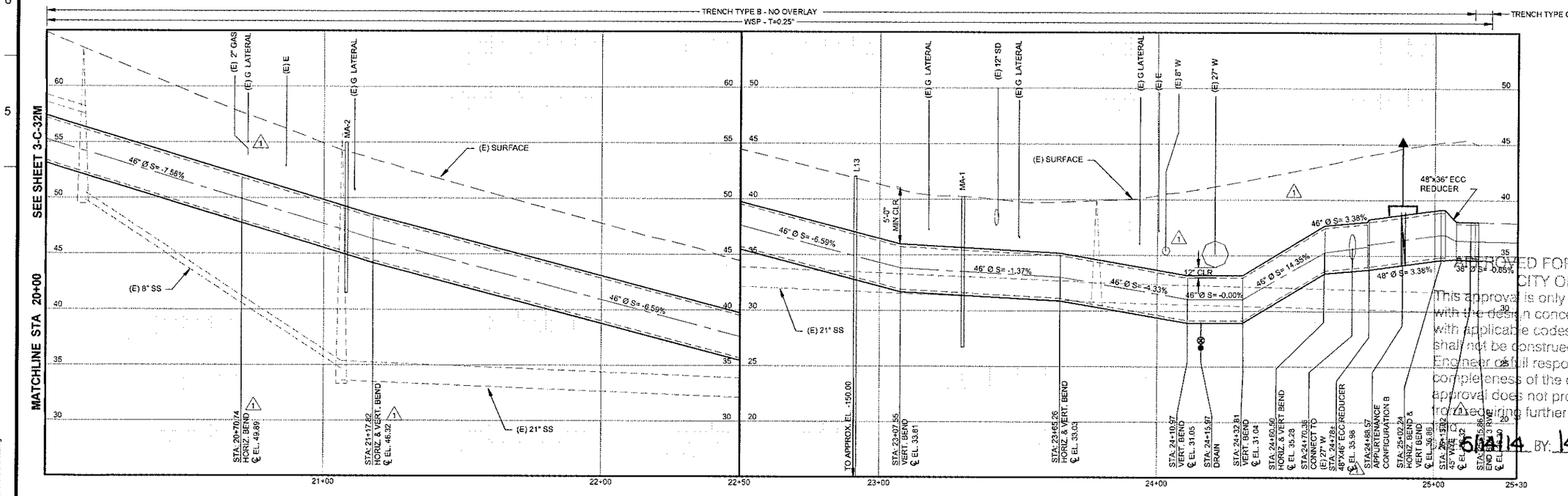

NOTES:

1. REMOVE AND REPLACE (E) RECTIFIER WITH (N) RECTIFIER; RECONNECT WIRING TO (E) JUNCTION BOX. DISCONNECT WIRING FROM (E) JUNCTION BOX TO (E) 27" WATER; CONNECT TO (N) RWP. SEE DWG 3-CP-03M, DETAIL 8 FOR (E) RECTIFIER STATION.
2. THE CITY OF WEST LINN INTENDS TO CONSTRUCT THE 8" W (SHOWN) AND ABANDON THE 6" W AND 2" W (SHOWN AS "ABANDONED" OR "AW") PRIOR TO RWP CONSTRUCTION. THE CITY ALSO INTENDS TO CONSTRUCT NEW WATER LATERALS (SHOWN) AND ABANDON EXISTING LATERALS (NOT SHOWN). NEW LATERALS ARE 1" DIA COPPER; PORTIONS OF NEW LATERALS (THAT WILL BE CROSSED BY THE RWP) WILL BE INSTALLED IN A 2" DIA PVC SLEEVE. CONTRACTOR SHALL PROTECT NEW 8" W AND LATERALS. ABANDONED 6" W, 2" W AND LATERALS MAY BE DEMOLISHED. SEE SPECIFICATION 02050 FOR REMOVAL REQUIREMENTS.
3. TEST STATION AT APPROX. STA. 24+40 CONNECTS TO THE 8" DIA WATER LINE.

APPROVED FOR CONSTRUCTION BY CITY OF WEST LINN
This approval is only for general conformance with the design concept and general compliance with applicable codes and requirements and shall not be construed as relieving the Design Engineer of full responsibility for accuracy and completeness of the drawings. This plan review approval does not prevent the City from requiring further code corrections in the field.
5/14/14 BY: Khoi Q. Le

Kennedy/Jenks Consultants
200 SW MARKET, SUITE 500, PORTLAND OREGON 97201

LINE IS 2 INCHES AT FULL SIZE (IF NOT 2" - SCALE ACCORDINGLY)
DESIGNED: SG
DRAWN: CDM
CHECKED: TRM
CHECKED: BM
APPROVED: FN

REVISIONS

REV.	DESCRIPTION	BY	DATE	APP.
3	ADDENDUM NO 9-35	SG	03/10/14	FN
2	ADDENDUM NO 6-58 ENTIRE DRAWING	SG	02/14/14	FN
1	ADDENDUM NO 4-37 ENTIRE DRAWING	SG	02/03/14	FN

THIS DRAWING WAS ORIGINALLY SEALED BY FREDERICK C. NEAL, A REGISTERED PROFESSIONAL ENGINEER IN THE STATE OF OREGON, No. 85267

CONFORMED TO BID DOCUMENTS

Lake Oswego · Tigard Water Partnership
sharing water · connecting communities

SCHEDULE 3 - MAPLETON
CIVIL
RAW WATER PLAN AND PROFILE STA 20+00 TO 25+15
MAPLETON DRIVE

FILENAME 119101610-3-C-33
KENNEDY/JENKS PROJECT NUMBER 1191016.20
SCALE AS SHOWN
DRAWING/FIGURE NUMBER 3-C-33M
14 OF 35

PLOT DATE: April 16, 2014 - 4:43PM USER: DeptH
FILE: N:\2011\1191016\20_Lake\Oswego_Fin\Wk\119101610-3-C-33.dwg

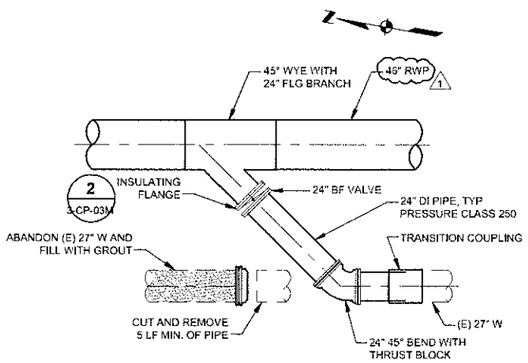

NOTES:

1. EXPOSE AND MEASURE (E) 27" W PRIOR TO MANUFACTURING PIPE AND SPECIALS.
2. SEE CONNECTION NOTES.

MAPLETON DR STA 24+70.36 (1) **1** 3-C-33M
SCALE: 3/16" = 1'-0"

APPROVED FOR CONSTRUCTION BY
CITY OF WEST LINN
This approval is only for general conformance with the design concept and general compliance with applicable codes and requirements and shall not be construed as relieving the Design Engineer of full responsibility for accuracy and completeness of the drawings. This plan review approval does not prevent the City from requiring further code corrections in the field.
DATE: 5/19/14 BY: Khoi Q. Le

CONNECTION NOTES:

1. CONNECTION PIPE AND FITTINGS: ALL JOINTS SHALL BE RESTRAINED - SEE SPECIFICATIONS. UNLESS SHOWN OTHERWISE, DI PIPE SHALL BE MINIMUM THICKNESS CLASS 52.
2. SEE DRAWING 3-C-60M, DETAIL 2 FOR VALVE BOX.
3. PROVIDE VERTICAL BENDS (NOT SHOWN) AS NEEDED IN CONNECTION PIPING.
4. SEE DRAWING 3-C-59M FOR ABANDONMENT OF (E) 27" WATER LINE.

Kennedy/Jenks Consultants
200 SW MARKET, SUITE 500, PORTLAND OREGON 97201

LINE IS 2 INCHES AT FULL SIZE (IF NOT 2" - SCALE ACCORDINGLY)

DESIGNED: SG
DRAWN: DDM
CHECKED: TRM
CHECKED: BM
APPROVED: FN

REVISIONS

REV.	DESCRIPTION	BY	DATE	APP.
1	ADDENDUM NO 4-38	SG	02/04/14	FN

THIS DRAWING WAS ORIGINALLY SEALED BY FREDERICK C. NEAL, A REGISTERED PROFESSIONAL ENGINEER IN THE STATE OF OREGON, No. 85267

CONFORMED TO BID DOCUMENTS

Lake Oswego · Tigard Water Partnership
sharing water · connecting communities

SCHEDULE 3 - MAPLETON
CIVIL
CONNECTION DETAILS

FILENAME 119101520-3-C-51M
KENNEDY/JENKS PROJECT NUMBER 1191016.20
SCALE AS SHOWN
DRAWING/FIGURE NUMBER 3-C-51M

PLOT DATE: April 15, 2014 - 4:40PM USER: Dougal
FILE: K:\2011\1191016.20_LakeOswego_Sites\119101620-3-C-51M.dwg

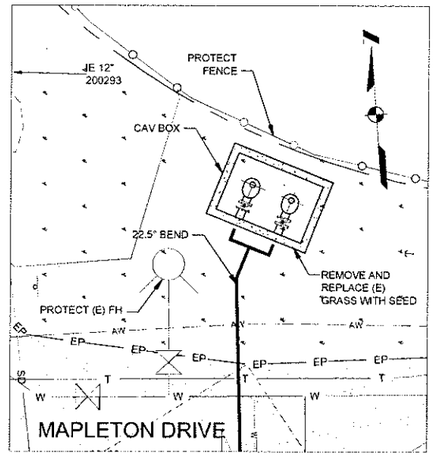

MAPLETON DR AT OR43 (1 / 3-C-27M)

0 5' 10'
1"=5'-0"

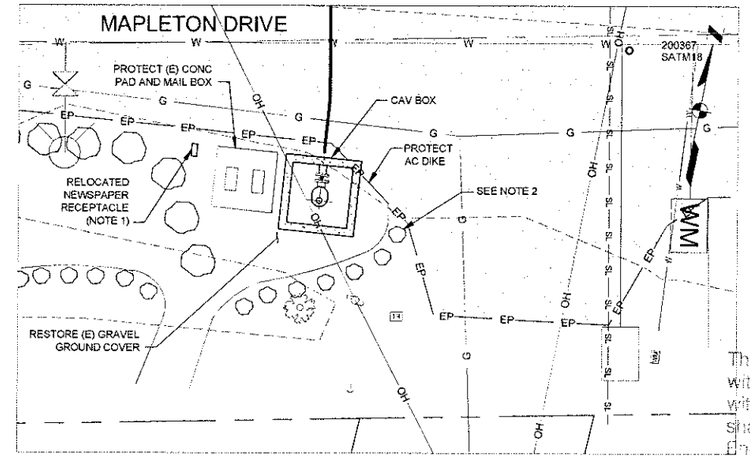

NEAR 3960 MAPLETON DR (2 / 3-C-29M)

0 5' 10'
1"=5'-0"

NOTES:
1. CONTRACTOR SHALL RELOCATE (E) NEWSPAPER RECEPTACLE FROM CAV LOCATION TO NEW LOCATION SHOWN ON THIS DETAIL.
2. REMOVE IVY AND RELOCATE LANDSCAPING ROCKS TO FORM CURVE AROUND THE CAV BOX THAT CONNECTS TO (E) IVY AND ROCK BOARDER.

APPROVED FOR CONSTRUCTION BY CITY OF WEST LINN

This approval is only for general conformance with the design concept and general compliance with applicable codes and requirements and shall not be construed as relieving the Design Engineer of full responsibility for accuracy and completeness of the drawings. This plan review approval does not prevent the City from requiring further code corrections in the field.

DATE: 5/14/14 BY: Khoi Q. Le

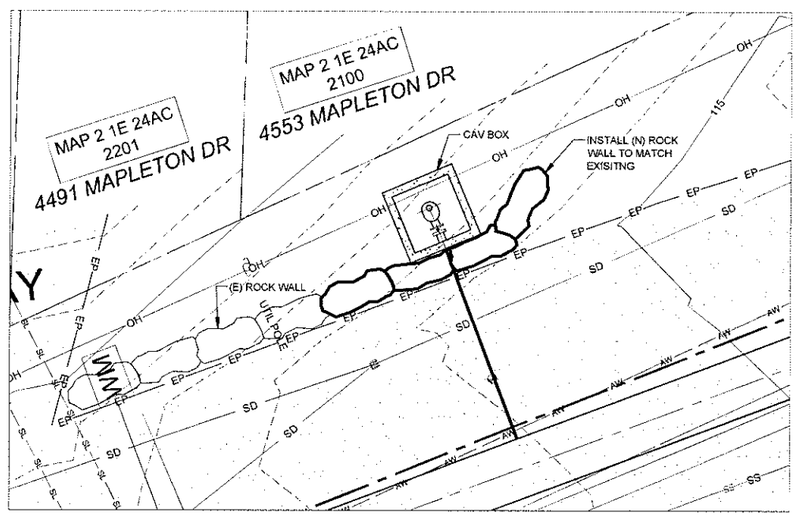

NEAR 4553 MAPLETON DRIVE (3 / 3-C-31M) 2

0 5' 10'
1"=5'-0"

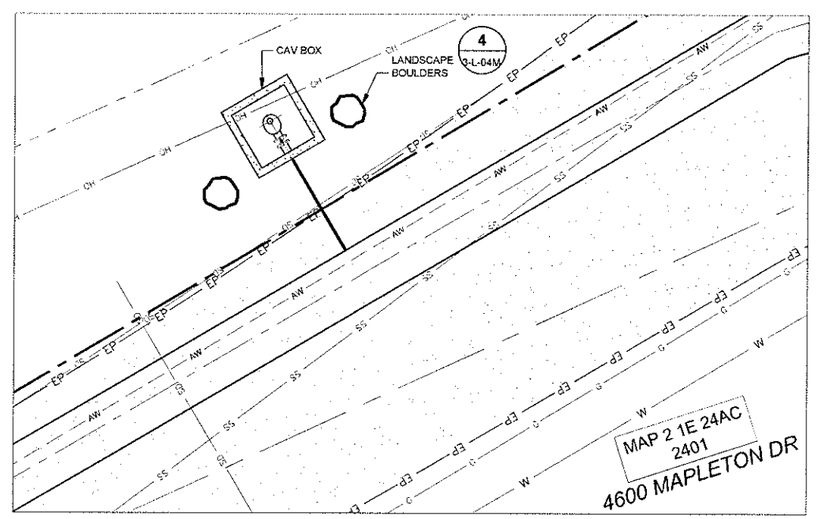

NEAR 4600 MAPLETON DRIVE (4 / 3-C-32M) 2

0 5' 10'
1"=5'-0"

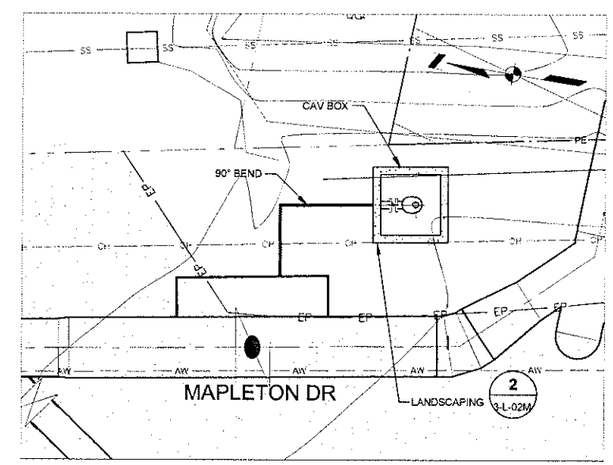

NEAR 5075 MAPLETON DR (5 / 3-C-33M)

0 5' 10'
1"=5'-0"

Kennedy/Jenks Consultants
200 SW MARKET, SUITE 500, PORTLAND OREGON 97201

LINE IS 2 INCHES AT FULL SIZE (IF NOT 2" - SCALE ACCORDINGLY)

DESIGNED: SG
DRAWN: DDM
CHECKED: TRM
CHECKED: BM
APPROVED: FN

REVISIONS

REV.	DESCRIPTION	BY	DATE	APP.
2	ADDENDUM NO 6-57 ENTIRE DRAWING	SG	02/14/14	FN
1	ADDENDUM NO 4-39	SG	02/04/14	FN

THIS DRAWING WAS ORIGINALLY SEALED BY FREDERICK C. NEAL, A REGISTERED PROFESSIONAL ENGINEER IN THE STATE OF OREGON, No. 85267

CONFORMED TO BID DOCUMENTS

Lake Oswego · Tigard Water Partnership
sharing water · connecting communities

SCHEDULE 3 - MAPLETON
CIVIL
CAV PLANS
STREET

FILENAME: 119101620-3-C-53M
KENNEDY/JENKS PROJECT NUMBER: 1191016.20
SCALE: AS SHOWN
DRAWING/FIGURE NUMBER: 3-C-53M

PLOT DATE: April 16, 2014 - 4:51PM USER: Gospel
FILE: N:\CIT\119101620_LakeOswego_Permit\119101620-3-C-53M.dwg

NOTES:

1. FILL ABANDONED PIPELINE (APPROXIMATELY 890 LF) WITH GROUT PER SPECIFICATION SECTION 02050.

Kennedy/Jenks Consultants
200 SW MARKET, SUITE 500, PORTLAND OREGON 97201

LINE IS 2 INCHES AT FULL SIZE (IF NOT 2" - SCALE ACCORDINGLY)

DESIGNED: SG
DRAWN: DDM
CHECKED: TRM
CHECKED: BM
APPROVED: FH

REVISIONS

REV.	DESCRIPTION	BY	DATE	APP.

THIS DRAWING WAS ORIGINALLY SEALED BY FREDERICK C. NEAL, A REGISTERED PROFESSIONAL ENGINEER IN THE STATE OF OREGON, No. 85267

CONFORMED TO BID DOCUMENTS

Lake Oswego · Tigard Water Partnership
sharing water · connecting communities

SCHEDULE 3 - MAPLETON
CIVIL
RAW WATER PIPELINE ABANDONMENT

FILENAME 119101620-3-C-58M
KENNEDY/JENKS PROJECT NUMBER 119101620
SCALE AS SHOWN
DRAWING/FIGURE NUMBER 3-C-58M

PLOT DATE: April 16, 2014 - 4:54PM USER: Dougd
FILE: H:\2011\119101620_Lakeoswego_Phase1\11101620-3-C-58M.dwg

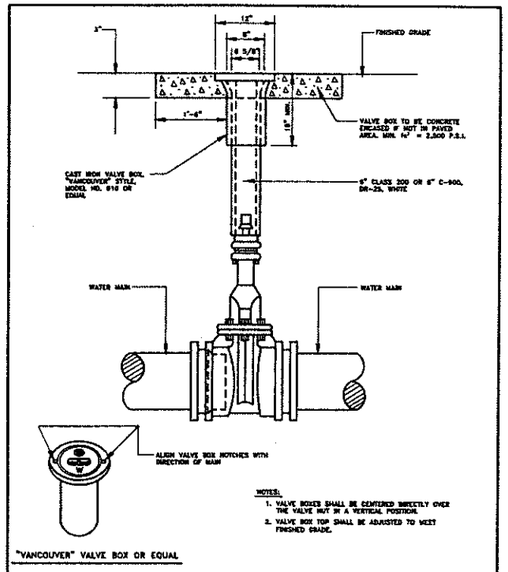

NOTES:

1. VALVE BOXES SHALL BE CENTERED DIRECTLY OVER THE VALVE NUT IN A VERTICAL POSITION.
2. VALVE BOX TOP SHALL BE ADJUSTED TO MEET FINISHED GRADE.

ENGINEERING DEPARTMENT CITY OF LAKE OSWEGO	TYPICAL VALVE BOX	DESIGN: MB / DRAWN: DB / CHECK: MB / SCALE: N.T.S. / DATE: 6-19-98 / SHEET 1 OF 1 / DRAWING NO. C-6.01

TYPICAL VALVE BOX (2)

NOT TO SCALE

3-C-60M

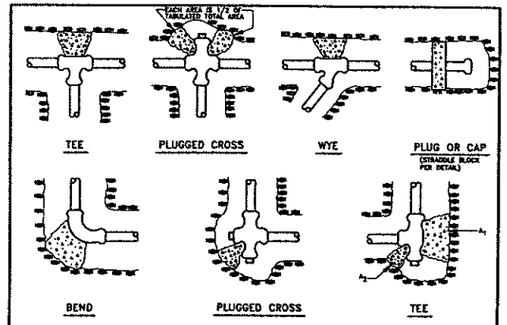

NOTES:

1. CONCRETE THRUST BLOCKING TO BE POURED AGAINST UNDISTURBED EARTH.
2. KEEP CONCRETE CLEAR OF JOINT AND ACCESSORIES.
3. IF NOT SHOWN ON PLANS, REQUIRED BEARING AREAS AT FITTING SHALL BE AS INDICATED BELOW, ADJUSTED IF NECESSARY, TO CONFORM TO THE TEST PROCEDURE (S) AND ALLOWABLE SOIL BEARING STRESS (ES) STATED THE SPECIAL SPECIFICATIONS.
4. BEARING AREAS AND SPECIAL BLOCKING DETAILS SHOWN ON PLANS TAKE PRECEDENCE OVER BEARING AREAS AND BLOCKING DETAILS SHOWN ON THIS STANDARD DETAIL.
5. BUILDING PAPER OR VISQUINE SHALL BE PLACED BETWEEN CONCRETE AND FITTINGS.
6. ALL POURED IN PLACE CONCRETE SHALL HAVE A (28) DAY STRENGTH OF 3,000 P.S.I. AND 2" TO 4" SLUMP.
7. BELOW BEARING AREAS BASED ON TEST PROCEDURE OF 150 P.S.I. AND AN ALLOWABLE SOIL BEARING STRESS OF 2,000 POUNDS PER SQUARE FOOT. TO COMPUTE BEARING AREAS FOR DIFFERENT TEST PRESSURES AND SOIL BEARING STRESSES, USE THE FOLLOWING EQUATION: BEARING AREA= (TEST PRESSURE/150) X (2,000/SOIL BEARING STRESS) X (TABLE VALUE). BEARING AREAS IN SQUARE FEET.

FITTING SIZE (IN.)	TEE, WYE, PLUG OR CAP	90° BEND PLUGGED CROSS	TEE PLUGGED ON RUN A_1	TEE PLUGGED ON RUN A_2	45° BEND	22 1/2° BEND	11 1/4° BEND
4	1.0	1.4	1.9	1.4	1.0	-	-
6	2.0	3.0	4.3	3.0	1.5	1.0	-
8	3.6	5.3	7.5	5.4	2.7	1.5	1.0
10	5.0	8.4	11.8	8.4	4.6	2.4	1.3
12	8.5	12.0	17.0	12.0	6.0	3.4	1.7
14	11.3	16.3	23.0	16.3	8.9	4.5	2.3
16	15.0	21.3	30.0	21.3	11.6	6.0	3.0
18	19.0	27.0	38.2	27.0	14.0	7.4	3.8
20	23.5	33.3	47.0	33.3	18.1	9.4	4.7
24	34.0	48.0	68.0	48.0	26.2	13.6	6.8

ENGINEERING DEPARTMENT CITY OF LAKE OSWEGO	THRUST BLOCKING DETAILS	DESIGN: MB / DRAWN: DB / CHECK: MB / SCALE: N.T.S. / DATE: 6-19-98 / SHEET 1 OF 1 / DRAWING NO. C-5.03

THRUST BLOCKING DETAIL (3)

NOT TO SCALE

3-C-60M

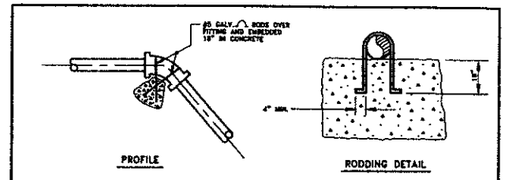

NOTES:

1. THE BELOW VOLUMES BASED ON TEST PRESSURE OF 150 P.S.I. AND THE WEIGHT OF CONCRETE= 4,050 LBS./CU. YD. TO COMPUTE VOLUMES FOR DIFFERENT TEST PRESSURES, USE THE FOLLOWING EQUATION: VOLUME= (TEST PRESSURE/ 150) X (TABLE VALUE).
2. KEEP CONCRETE CLEAR OF JOINT ACCESSORIES.
3. THE REQUIRED THRUST BLOCK VOLUMES FOR SPECIAL CONNECTIONS ARE SHOWN ENCIRCLED ON THE PLAN; (9) INDICATES 9 CUBIC YARDS OF CONCRETE ARE REQUIRED.
4. IF NOT SHOWN ON PLANS, REQUIRED VOLUMES AT FITTINGS SHALL BE AS INDICATED BELOW, ADJUSTED IF NECESSARY, TO CONFORM TO THE TEST PRESSURE (S) STATED IN THE SPECIAL SPECIFICATIONS.
5. VOLUMES AND SPECIAL BLOCKING DETAILS SHOWN ON PLANS TAKE PRECEDENCE OVER VOLUMES AND THE BLOCKING DETAIL SHOWN ON THIS STANDARD DETAIL.
6. ALL POURED IN PLACE CONCRETE SHALL HAVE A (28) DAY STRENGTH OF 3,000 P.S.I. AND 2" TO 4" SLUMP.

FITTING SIZE (IN.)	VOLUME OF THRUST BLOCK IN CU. YD.			
	90° BEND	45° BEND	22 1/2° BEND	11 1/4° BEND
4	- -	- -	- -	- -
6	1.3	- -	- -	- -
8	2.3	1.1	- -	- -
10	3.7	1.8	- -	- -
12	5.5	2.6	1.3	- -
14	7.5	3.8	1.7	- -
16	9.8	5.1	2.3	0.9

ENGINEERING DEPARTMENT CITY OF LAKE OSWEGO	GRAVITY THRUST BLOCK DETAIL	DESIGN: MB / DRAWN: DB / CHECK: MB / SCALE: N.T.S. / DATE: 6-19-98 / SHEET 1 OF 1 / DRAWING NO. C-5.04

GRAVITY THRUST BLOCK DETAIL (4)

NOT TO SCALE

3-C-60M

NOT USED (1)

NOT TO SCALE

3-C-60M

APPROVED FOR CONSTRUCTION BY
CITY OF WEST LINN
This approval is only for general conformance with the design concept and general compliance with applicable codes and requirements and shall not be construed as relieving the Design Engineer of full responsibility for accuracy and completeness of the drawings. This plan review approval does not prevent the City from requiring further code corrections in the field.
DATE: 5/14/14 BY: Khoi Q. Le

Kennedy/Jenks Consultants
200 SW MARKET, SUITE 500, PORTLAND OREGON 97201

LINE IS 2 INCHES AT FULL SIZE (IF NOT 2" - SCALE ACCORDINGLY)

DESIGNED: SG
DRAWN: DDM
CHECKED: TRM
CHECKED: BM
APPROVED: FN

REVISIONS

REV.	DESCRIPTION	BY	DATE	APP.

THIS DRAWING WAS ORIGINALLY SEALED BY FREDERICK C. NEAL, A REGISTERED PROFESSIONAL ENGINEER IN THE STATE OF OREGON, No. 85267

CONFORMED TO BID DOCUMENTS

Lake Oswego · Tigard Water Partnership
sharing water · connecting communities

SCHEDULE 3 - MAPLETON
CIVIL
STANDARD DETAILS
LAKE OSWEGO

FILENAME 119101620-3-C-60M
KENNEDY/JENKS PROJECT NUMBER 1191016.20
SCALE AS SHOWN
DRAWING/FIGURE NUMBER 3-C-60M

PLOT DATE: April 16, 2014 4:56PM USER: DougM
FILE: N:\2011\1191016.20_LakeOswego_Fnl\dwg\119101620-3-C-60M.dwg

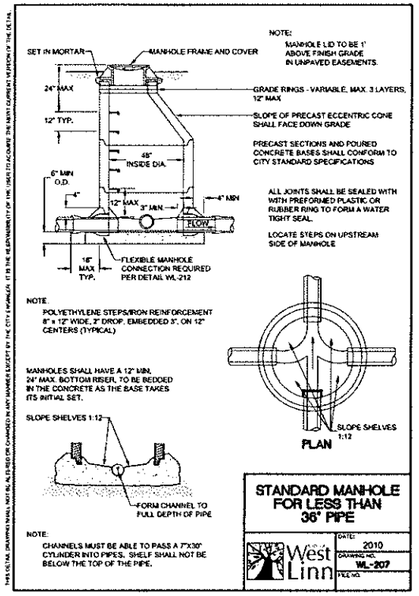

STANDARD MANHOLE FOR LESS THAN 36-INCH PIPE (1 / 3-C-61M)

NOT TO SCALE

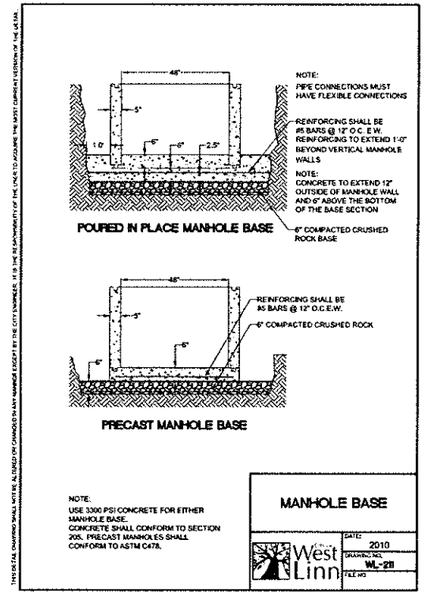

MANHOLE BASE (2 / 3-C-61M)

NOT TO SCALE

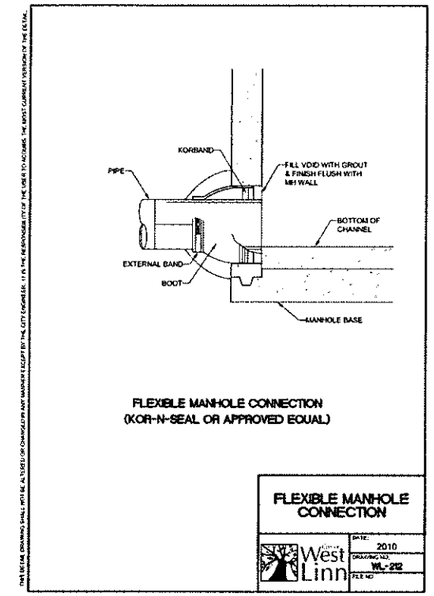

FLEXIBLE MANHOLE CONNECTION (3 / 3-C-61M)

NOT TO SCALE

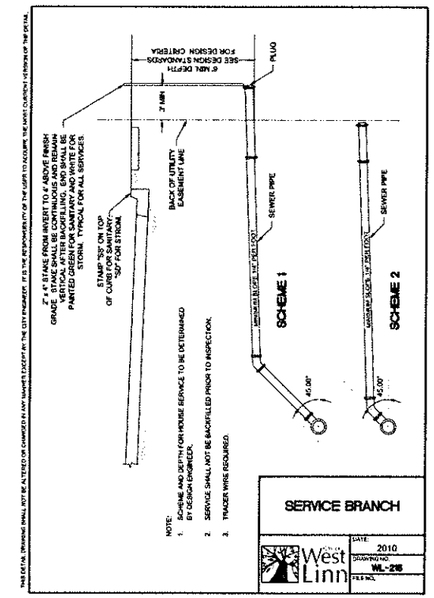

SERVICE BRANCH (4 / 3-C-61M)

NOT TO SCALE

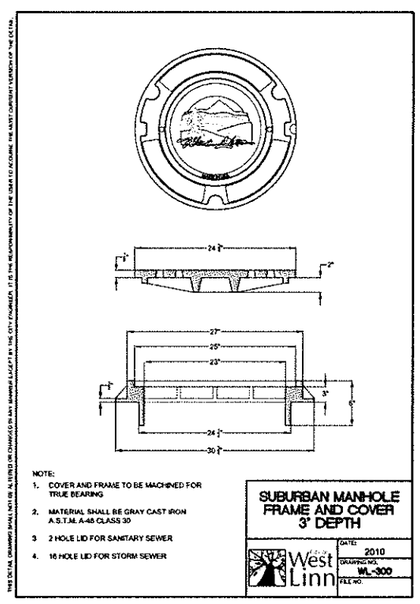

SUBURBAN MANHOLE FRAME AND COVER 3-INCH DEPTH (5 / 3-C-61M)

NOT TO SCALE

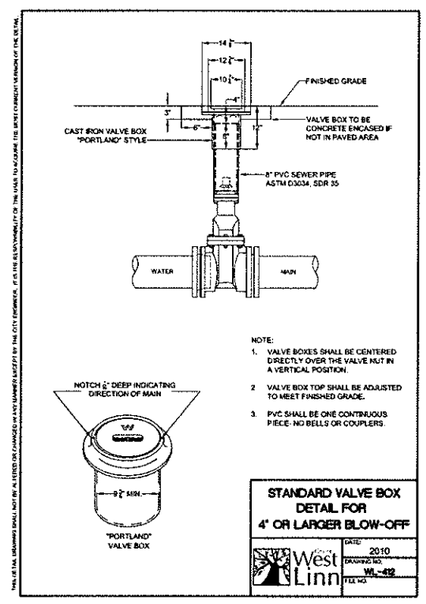

STANDARD VALVE BOX DETAIL FOR 4-INCH OR LARGER BLOW-OFF (6 / 3-C-61M)

NOT TO SCALE

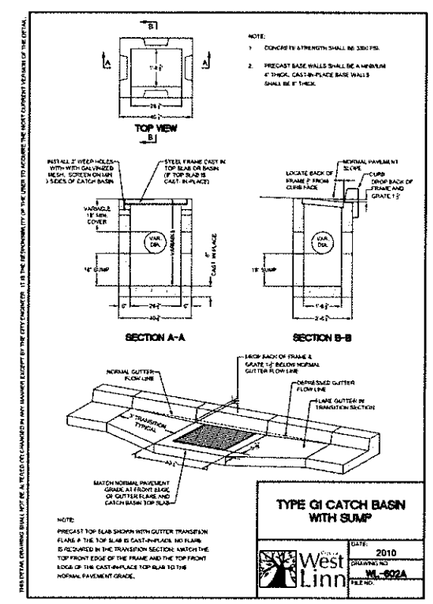

TYPE G1 CATCH BASIN WITH SUMP (7 / 3-C-27M) △1

NOT TO SCALE

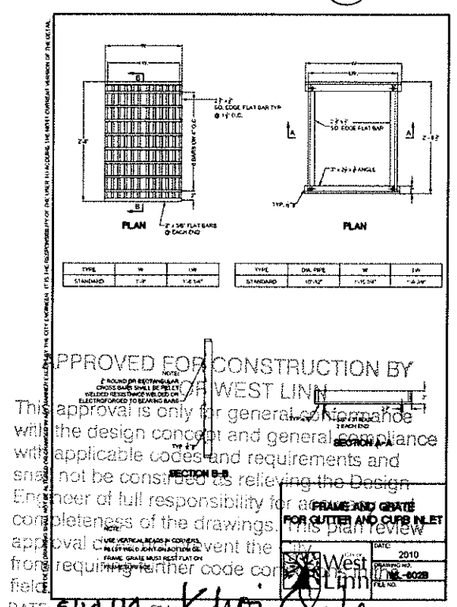

FRAME AND GRATE FOR GUTTER AND CURB INLET (8 / 3-C-61M)

NOT TO SCALE

Kennedy/Jenks Consultants 200 SW MARKET, SUITE 500, PORTLAND OREGON 97201	LINE IS 2 INCHES AT FULL SIZE (IF NOT 2" - SCALE ACCORDINGLY) DESIGNED: SG DRAWN: DDM CHECKED: TRM CHECKED: BM APPROVED: FN	REVISIONS REV. / DESCRIPTION / BY / DATE / APP. △1 ADDENDUM NO 9-36 / FN / 03/10/14	THIS DRAWING WAS ORIGINALLY SEALED BY FREDERICK C. NEAL, A REGISTERED PROFESSIONAL ENGINEER IN THE STATE OF OREGON, No. 85267

CONFORMED TO BID DOCUMENTS

Lake Oswego · Tigard Water Partnership
sharing water · connecting communities

SCHEDULE 3 - MAPLETON
CIVIL
STANDARD DETAILS
WEST LINN

FILENAME	1191016620-3-C-61M
KENNEDY/JENKS PROJECT NUMBER	1191016.20
SCALE	AS SHOWN
DRAWING/FIGURE NUMBER	3-C-61M

PLOT DATE: April 17, 2014, 4:58PM USER: CarsonC
FILE: N:\2011\1191016.20_LakeOswego_FirWW\1191016620-3-C-61M.dwg

APPURTENANCE CONFIGURATION A
(NOT USED)

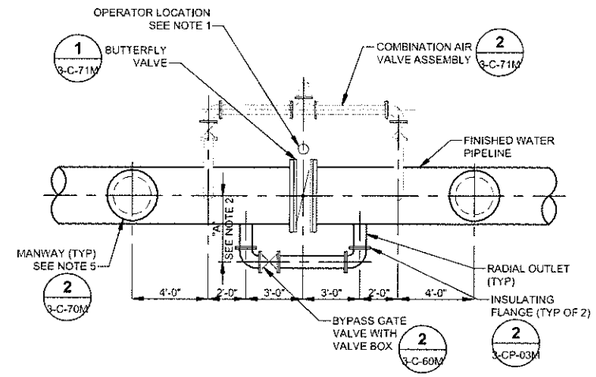

APPURTENANCE CONFIGURATION B

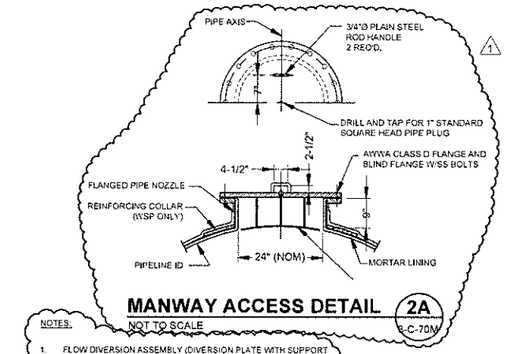

MANWAY ACCESS DETAIL 2A (3-C-70M)
NOT TO SCALE

NOTES:

1. FLOW DIVERSION ASSEMBLY (DIVERSION PLATE WITH SUPPORT PLATES) SHALL BE WELDED STEEL AND WELDED TO THE BLIND FLANGE. DESIGN AND FABRICATED BY THE CONTRACTOR IN ACCORDANCE WITH AWWA MANUAL M11. DIVERSION PLATE SHALL BE SIZED AND CURVED TO MATCH THE CYLINDER OF THE RWP OR FWP. WITH AN APPROXIMATE 1/2-INCH GAP BETWEEN THE DIVERSION PLATE AND THE RWP OR FWP. THE BOTTOM OF THE BLIND FLANGE AND FLOW DIVERSION ASSEMBLY SHALL BE FUSION EPOXY COATED. MINIMUM PLATE THICKNESS SHALL BE 0.375 INCHES.

APPURTENANCE CONFIGURATION C
(NOT USED)

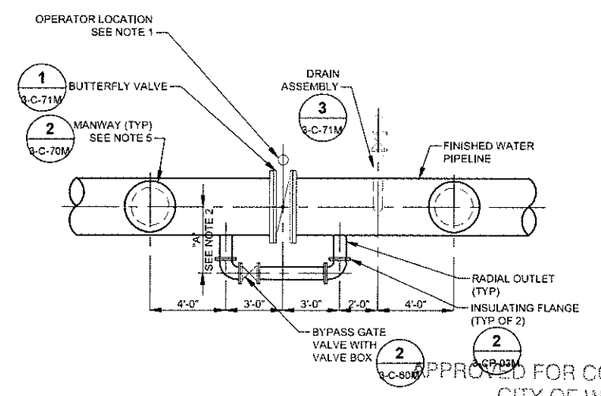

APPURTENANCE CONFIGURATION D

LINE VALVE SIZE	BYPASS VALVE SIZE	MINIMUM "A"
42"	8"	46"
48"	10"	50"

NOTES:

1. LOCATE BUTTERFLY VALVE OPERATOR ON OPPOSITE SIDE OF PIPELINE FROM BYPASS VALVE.
2. INCREASE DIMENSION "A" AS NECESSARY TO CLEAR EXISTING UTILITIES. SEE TABLE.
3. ALL JOINTS SHALL BE RESTRAINED.
4. CONTRACTOR HAS THE OPTION OF USING MECHANICAL JOINT (MJ) GATE VALVE AND FITTINGS.
5. SEE SHEET 3-C-73M FOR WSP DETAILS.
6. PROVIDE JOINT BONDING AT BUTTERFLY VALVE.

APPROVED FOR CONSTRUCTION BY
CITY OF WEST LINN
This approval is only for general conformance with the design concept and general compliance with applicable codes and requirements and shall not be construed as relieving the Design Engineer of full responsibility for accuracy and completeness of the drawings. This plan review approval does not prevent the City from requiring further code corrections in the field.
DATE 5/14/14 BY: Khoi Q. L

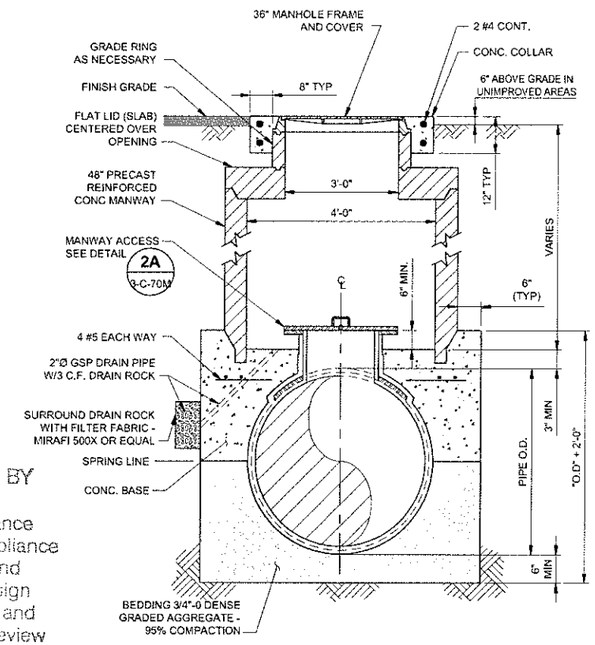

MANWAY DETAIL 2 (3-C-70M)
NOT TO SCALE

APPURTENANCE CONFIGURATION DETAILS 1 (3-C-70M)
NOT TO SCALE

Kennedy/Jenks Consultants
200 SW MARKET, SUITE 500, PORTLAND OREGON 97201

LINE IS 2 INCHES AT FULL SIZE (IF NOT 2" - SCALE ACCORDINGLY)

DESIGNED: SG
DRAWN: DDM
CHECKED: TRM
CHECKED: BM
APPROVED: FN

REVISIONS

REV.	DESCRIPTION	BY	DATE	APP.
2	ADDENDUM 9-37	FN	03/10/14	
1	ADDENDUM 7-13	FN	02/21/14	

THIS DRAWING WAS ORIGINALLY SEALED BY FREDERICK C. NEAL, A REGISTERED PROFESSIONAL ENGINEER IN THE STATE OF OREGON, No. 85267

CONFORMED TO BID DOCUMENTS

Lake Oswego · Tigard Water Partnership
sharing water · connecting communities

SCHEDULE 3 - MAPLETON
CIVIL
APPURTENANCE DETAILS 1

FILENAME 119101620-3-C-70M
KENNEDY/JENKS PROJECT NUMBER 1191016.20
SCALE AS SHOWN
DRAWING/FIGURE NUMBER 3-C-70M

PLOT DATE: April 18, 2014 - 10:04AM USER: CoremC
FILE: N:\2011\1191016\D_Mech\dwgs_PWA\11191620-3-C-70M.dwg

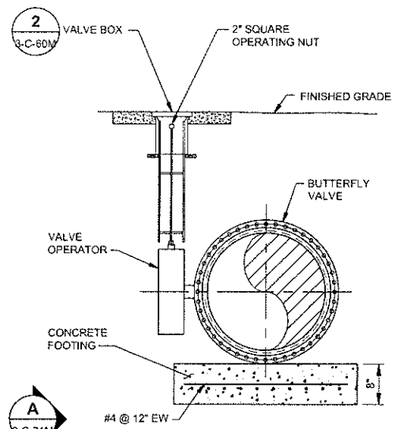

SECTION A

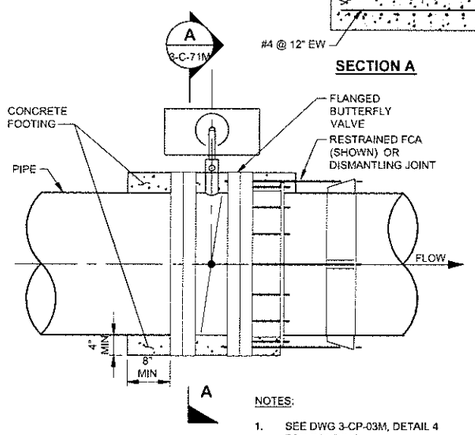

NOTES:

1. SEE DWG 3-CP-03M, DETAIL 4 FOR BONDING.

BUTTERFLY VALVE DETAIL (1, 3-C-71M)

NOT TO SCALE

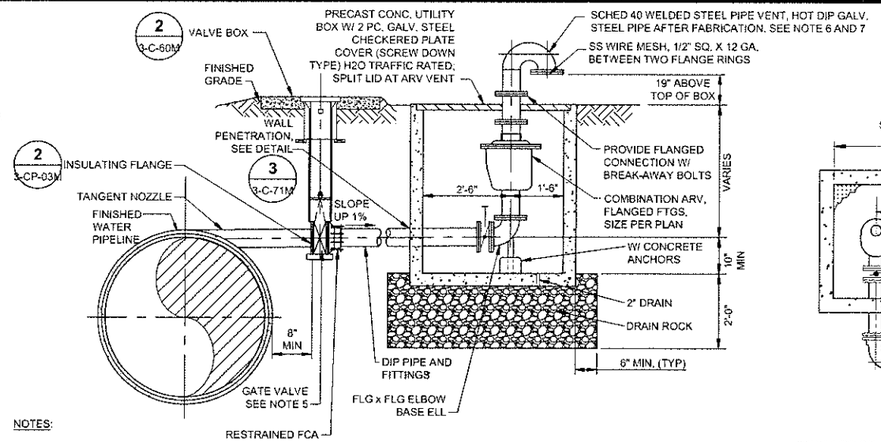

NOTES:

1. ALL JOINTS SHALL BE RESTRAINED.
2. CONTRACTOR HAS THE OPTION OF USING MECHANICAL JOINT (MJ) GATE VALVE AND FITTINGS.
3. DI PIPE SHALL BE MIN PRESSURE CLASS 150.
4. NOMINAL DIAMETER OF PIPE CONNECTION, VALVES, PIPE AND VENT TO EQUAL CAV SIZE (MIN). CONTRACTOR MAY OPT TO INCREASE SIZE OF THESE ITEMS FOR UNIFORMITY. SEE PLAN FOR CAV SIZE.
5. TWO FWP OR RWP CONNECTIONS (EACH WITH TANGENT NOZZLE, GATE VALVE , INSULATING FLANGE, FCA AND VALVE BOX) REQUIRED FOR APPURTENANCE CONFIGURATION B.
6. INTERIOR VENT SHOWN. SEE DETAIL 2A FOR EXTERIOR VENT. REFER TO VALVE, CAV AND DRAIN SCHEDULE FOR REQUIRED CAV VENT CONFIGURATION.
7. ABOVE GROUND VENT PIPES SHALL BE PAINTED WITH BROWN COLOR UNLESS OTHERWISE NOTED.

SECTION

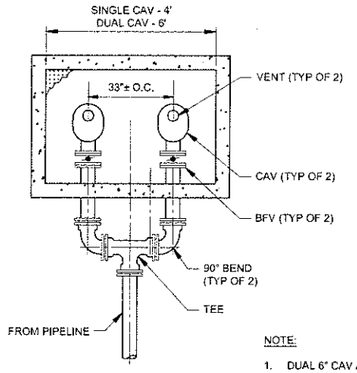

NOTE:

1. DUAL 6" CAV ASSEMBLY SHOWN, SINGLE CAV ASSEMBLY SIMILAR - CENTER CAV.

PLAN

COMBINATION AIR VALVE ASSEMBLY (2, VAR)

NOT TO SCALE

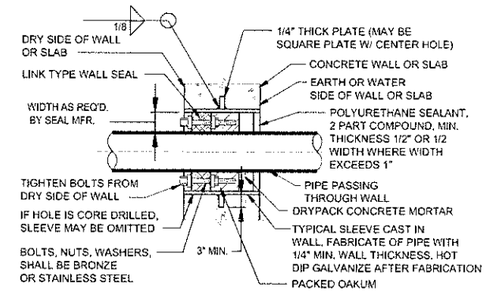

WALL PENETRATION (4, 3-C-71M)

NOT TO SCALE

VALVE, CAV AND DRAIN SCHEDULE

	STATION	APPURTENANCE CONFIGURATION	ITEM	SIZE (IN)	VENT LOCATION	NORTHING*	EASTING*	TAG NO.**
	FWP 436+09.00	B	BF VALVE	48				
			DUAL CAV	6	INTERIOR	633587.61	7652634.03	
	FWP 441+79.96	—	DRAIN	12		633540.30	7653201.06	
	FWP 444+43.10		CAV	6	INTERIOR	633497.32	7653465.01	
	FWP 455+40.34	D	BF VALVE	48				
			DRAIN	12		633590.93	7654533.34	
2	RWP 13+85.00		CAV	6 (3)	INTERIOR	633670.40	7654859.78	
	RWP 15+65.00		CAV	4	INTERIOR	633744.02	7655020.73	
1	RWP 24+15.97	—	DRAIN	12		633470.63	7655707.13	
	RWP 24+90.36	B	BFV	48 (3)				
			CAV	6	INTERIOR	633398.18	7655750.72	

* COORDINATES OF CENTER OF CAV UTILITY BOX OR DRAIN MANWAY
** TAG NUMBERS TO BE PROVIDED BY OWNER

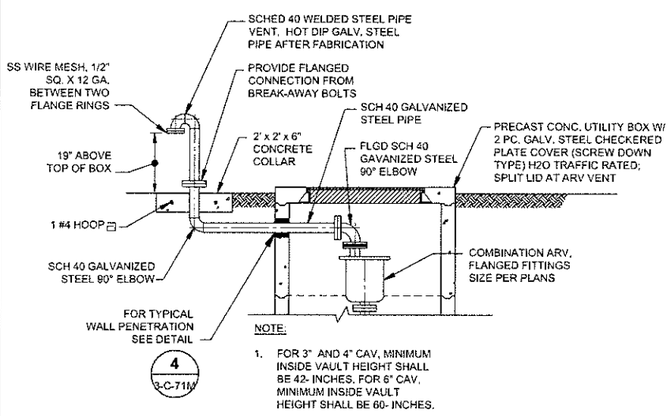

NOTE:

1. FOR 3" AND 4" CAV, MINIMUM INSIDE VAULT HEIGHT SHALL BE 42- INCHES. FOR 6" CAV, MINIMUM INSIDE VAULT HEIGHT SHALL BE 60- INCHES.

COMBINATION AIR VALVE EXTERIOR VENT DETAIL (2A, 3-C-71M)

NOT TO SCALE

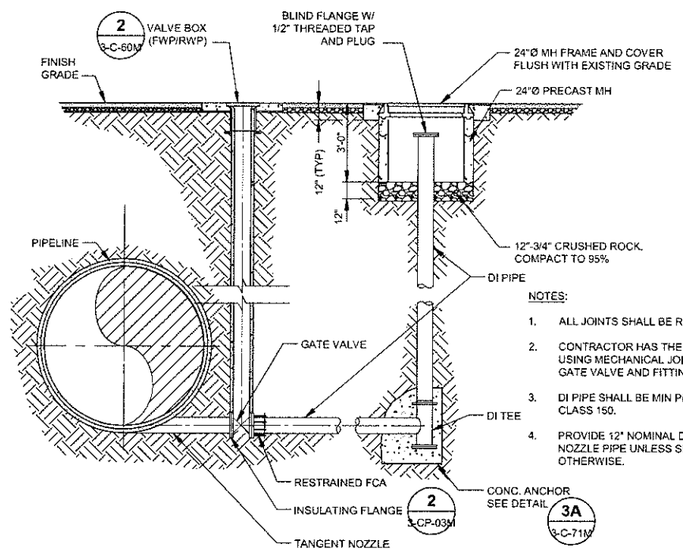

NOTES:

1. ALL JOINTS SHALL BE RESTRAINED.
2. CONTRACTOR HAS THE OPTION OF USING MECHANICAL JOINT (MJ) GATE VALVE AND FITTINGS.
3. DI PIPE SHALL BE MIN PRESSURE CLASS 150.
4. PROVIDE 12" NOMINAL DIAMETER NOZZLE PIPE UNLESS SHOWN OTHERWISE.

DRAIN ASSEMBLY (3, 3-C-71M)

NOT TO SCALE

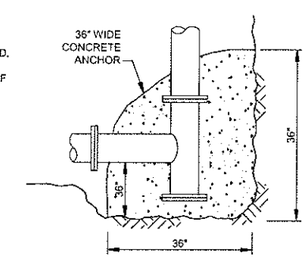

ELEVATION

CONCRETE ANCHOR DETAIL (3A, -)

NOT TO SCALE

APPROVED FOR CONSTRUCTION BY CITY OF WEST LINN

This approval is only for general conformance with the design concept and general compliance with applicable codes and requirements and shall not be construed as relieving the Design Engineer of full responsibility for accuracy and completeness of the drawings. This plan review approval does not prevent the City from requiring further code corrections in the field.

DATE: 5/14/14 BY: Khoi Q. Le

Kennedy/Jenks Consultants
200 SW MARKET, SUITE 500, PORTLAND OREGON 97201

LINE IS 2 INCHES AT FULL SIZE (IF NOT 2" - SCALE ACCORDINGLY)

DESIGNED: SG
DRAWN: DDM
CHECKED: TRM
CHECKED: BM
APPROVED: FN

REVISIONS

REV.	DESCRIPTION	BY	DATE	APP.
3	ADDENDUM NO 9-39	FN	03/10/14	FN
2	ADDENDUM NO 6-58	SG	02/14/14	FN
1	ADDENDUM NO 4-40	SG	02/04/14	FN

THIS DRAWING WAS ORIGINALLY SEALED BY DALE DOUGHTY, A REGISTERED PROFESSIONAL ENGINEER IN THE STATE OF OREGON, No. 85267

CONFORMED TO BID DOCUMENTS

Lake Oswego · Tigard Water Partnership
sharing water · connecting communities

SCHEDULE 3 - MAPLETON
CIVIL
APPURTENANCE DETAILS 2

FILENAME 119101620-3-C-71M
KENNEDY/JENKS PROJECT NUMBER 1191016.20
SCALE AS SHOWN
DRAWING/FIGURE NUMBER 3-C-71M

PLOT DATE: April 17, 2014 - 4:40PM USER: CorenC
FILE: N:\20111\191016.20_Lake\dwgs_Permit\119101620-3-C-71M.dwg

NOTE:
1. GROUT ANNULAR SPACE BETWEEN CASING AND CARRIER PIPE

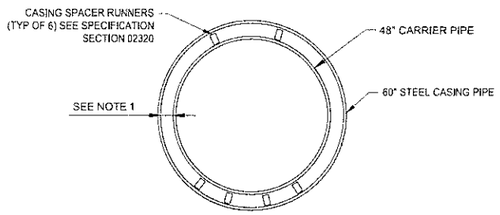

CASING PIPE TYPICAL SECTION (1 / 3-C-28M)
NOT TO SCALE

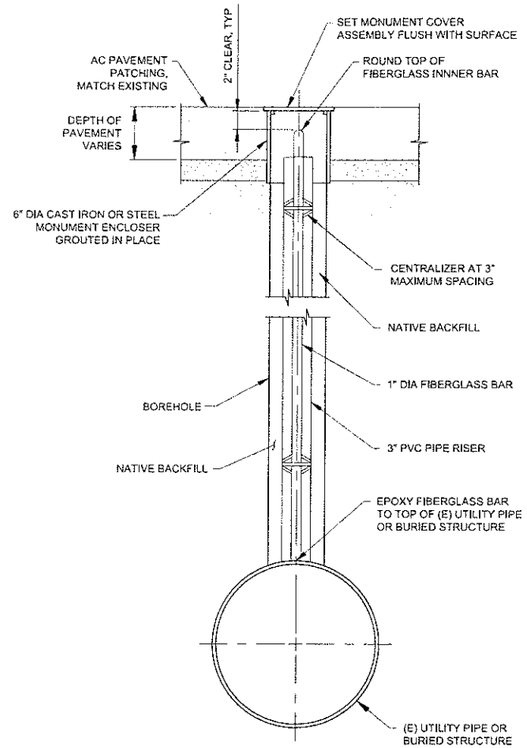

TYPICAL UTILITY SETTLEMENT POINT DETAIL (2 / 3-C-28M)
NOT TO SCALE

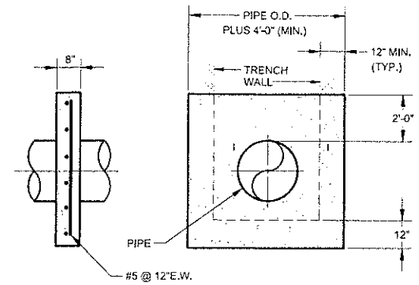

NOTES:
1. CUT OFF WALLS SHALL BE KEYED INTO UNDISTURBED SOIL 12" MIN. BEYOND TRENCH WALLS AND BOTTOM.
2. PROVIDE 1/2" THICK EXPANSION JOINT WRAP AROUND PIPE, PREFORMED SPONGE RUBBER PER ASTMD-1752-84 TYPE 1 SPONGE RUBBER.
3. CONTRACTOR SHALL SUBMIT INSTALLATION PLAN.

CUTOFF WALL DETAIL (3 / VAR)
NOT TO SCALE

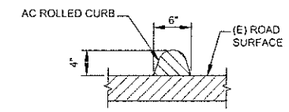

NOTES:
1. STANDARD DETAIL FOR ROLLED ASPHALT CONCRETE CURB FOR BASE BID PURPOSES. ACTUAL CURBS IN FIELD VARY AND SHALL BE REPLACED IN-KIND WHEN PROTECTION IN PLACE IS NOT FEASIBLE.

ROLLED ASPHALT CONCRETE CURB DETAIL (4 / VAR)
NOT TO SCALE

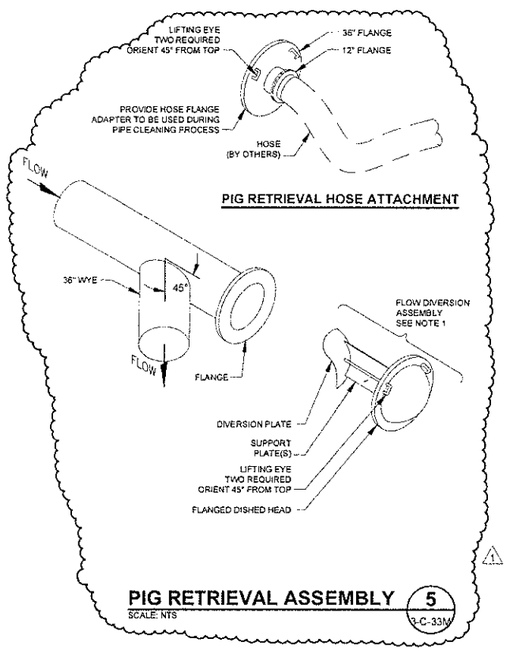

PIG RETRIEVAL ASSEMBLY (5 / 3-C-33M)
SCALE: NTS

NOTES:
1. FLOW DIVERSION ASSEMBLY SHALL BE FUSION EPOXY LINED AND COATED WELDED STEEL, DESIGNED AND FABRICATED BY THE CONTRACTOR IN ACCORDANCE WITH AWWA MANUAL M11. ASSEMBLY SHALL ATTACH TO THE FLANGE OF THE WYE USING FLANGE BOLTS, AND SHALL BE REMOVABLE. DIVERSION PLATE SHALL BE SIZED AND CURVED TO MATCH THE CYLINDER OF THE WYE RUN, WITH AN APPROXIMATE ¼-INCH GAP BETWEEN THE DIVERSION PLATE AND THE WYE. MINIMUM PLATE THICKNESS SHALL BE 0.375-INCHES. 2

APPROVED FOR CONSTRUCTION BY
CITY OF WEST LINN
This approval is only for general conformance with the design concept and general compliance with applicable codes and requirements and shall not be construed as relieving the Design Engineer of full responsibility for accuracy and completeness of the drawings. This plan review approval does not prevent the City from requiring further code corrections in the field.
DATE: 5/14/14 BY: Khui Q.L

Kennedy/Jenks Consultants
200 SW MARKET, SUITE 500, PORTLAND OREGON 97201

LINE IS 2 INCHES AT FULL SIZE (IF NOT 2" - SCALE ACCORDINGLY)
DESIGNED: SG
DRAWN: DDM
CHECKED: TRM
CHECKED: BM
APPROVED: FN

REVISIONS

REV.	DESCRIPTION	BY	DATE	APP.
2	ADDENDUM 9-38	FN	03/10/14	
1	ADDENDUM 7-14	FN	02/21/14	

THIS DRAWING WAS ORIGINALLY SEALED BY FREDERICK C. NEAL, A REGISTERED PROFESSIONAL ENGINEER IN THE STATE OF OREGON, No. 85267

CONFORMED TO BID DOCUMENTS

Lake Oswego · Tigard Water Partnership
sharing water · connecting communities

SCHEDULE 3 - MAPLETON
CIVIL
MISCELLANEOUS DETAILS

FILENAME 119101820-3-C-72M
KENNEDY/JENKS PROJECT NUMBER 1191016.20
SCALE AS SHOWN
DRAWING/FIGURE NUMBER 3-C-72M

PLOT DATE: April 17, 2014 - 5:29PM USER: DongH
FILE: N:\201\1191016.20_LakeOswego_Fwtr\119101820-3-C-72M.dwg

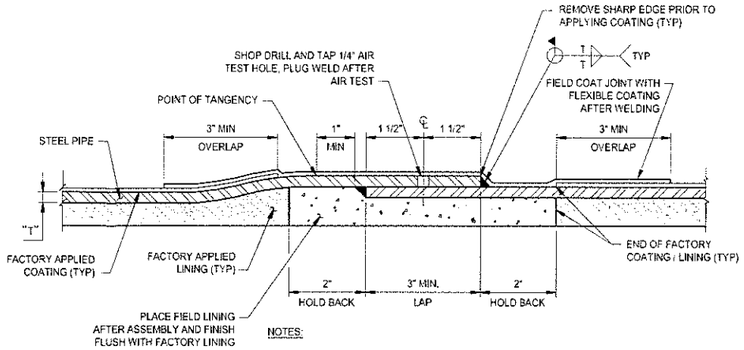

NOTES:

1. SPECIAL CLOSURE JOINTS SHALL HAVE A TWO INCH DEEPER BELL TO ALLOW FOR PIPE EXPANSION/SHRINKAGE BEFORE WELDING.

TYPICAL PIPE LAP WELD SLIP JOINT (1 / 3-C-73M)

SCALE: NOT TO SCALE

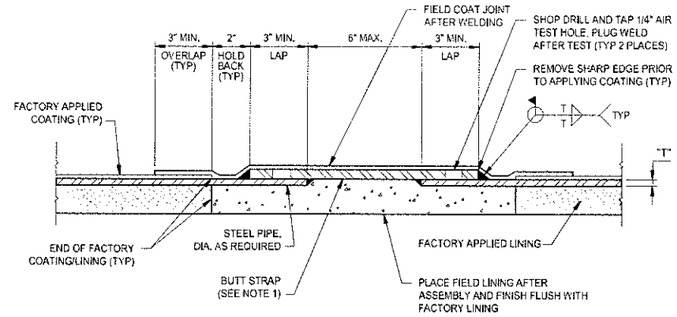

NOTE:

1. BUTT STRAP SEAM SHALL BE CLOSED WITH A FULL PENETRATION BUTT WELD.

BUTT STRAP JOINT FOR FIELD CLOSURE (2 / 3-C-73M)

SCALE: NOT TO SCALE

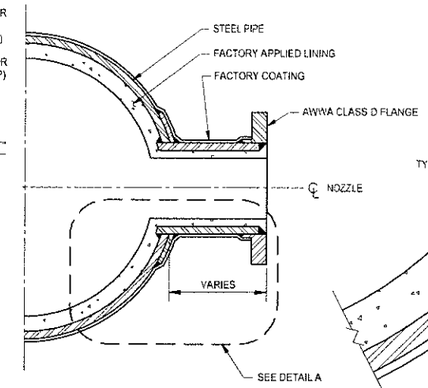

NOTES:

1. NOZZLE SHALL BE DESIGNED TO MEET THE REQUIREMENTS OF AWWA M-11

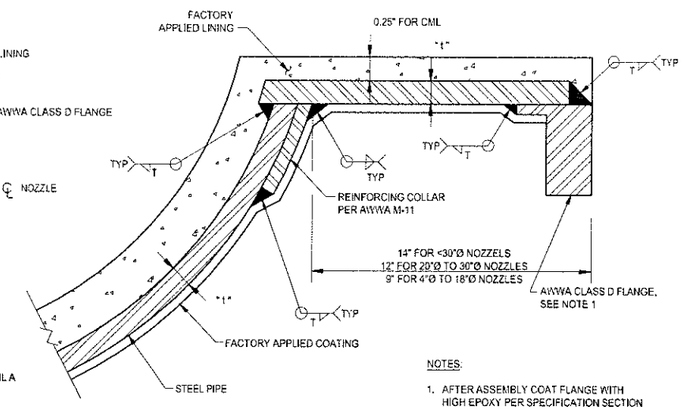

NOTES:

1. AFTER ASSEMBLY COAT FLANGE WITH HIGH EPOXY PER SPECIFICATION SECTION 15063. DO NOT COAT FACE OF FLANGE.

DETAIL A

STEEL PIPE RADIAL NOZZLE 4 INCH OR LARGER (3 / 3-C-73M)

SCALE: NOT TO SCALE

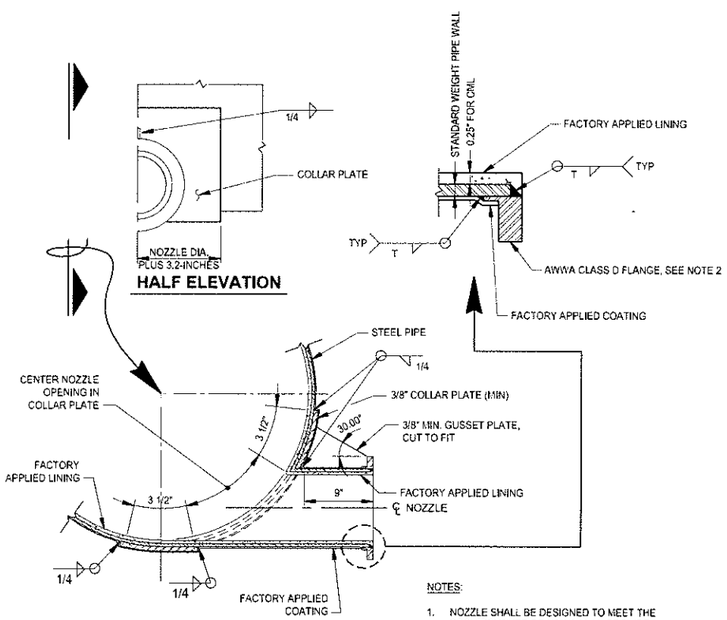

NOTES:

1. NOZZLE SHALL BE DESIGNED TO MEET THE REQUIREMENTS OF AWWA M-11, PROVIDE STANDARD WEIGHT WALL PIPE.
2. AFTER ASSEMBLY COAT FLANGE WITH HIGH EPOXY PER SPECIFICATION SECTION 15063. DO NOT COAT FACE OF FLANGE.

STEEL PIPE TANGENT NOZZEL (4 / 3-C-73M)

SCALE: NOT TO SCALE

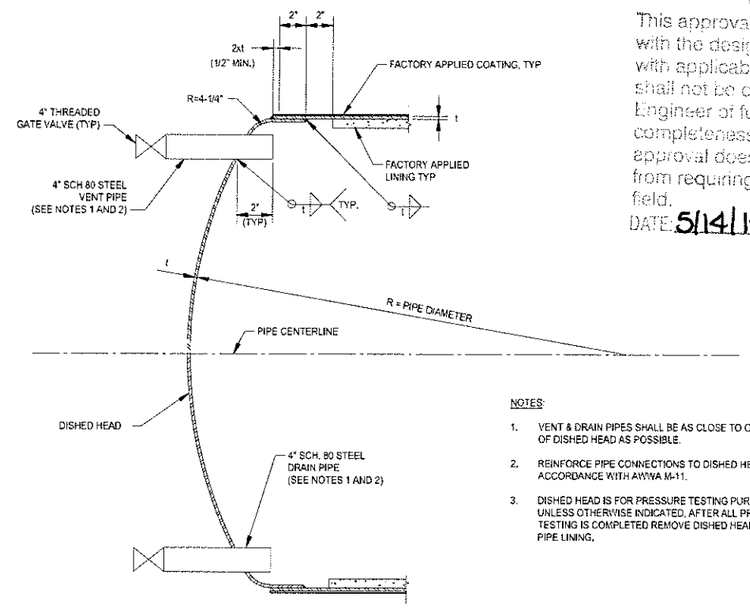

NOTES:

1. VENT & DRAIN PIPES SHALL BE AS CLOSE TO OUTER EDGE OF DISHED HEAD AS POSSIBLE.
2. REINFORCE PIPE CONNECTIONS TO DISHED HEAD IN ACCORDANCE WITH AWWA M-11.
3. DISHED HEAD IS FOR PRESSURE TESTING PURPOSES ONLY. UNLESS OTHERWISE INDICATED, AFTER ALL PRESSURE TESTING IS COMPLETED REMOVE DISHED HEAD AND REPAIR PIPE LINING.

DISHED HEAD (5 / 3-C-73M)

SCALE: NOT TO SCALE

APPROVED FOR CONSTRUCTION BY
CITY OF WEST LINN
This approval is only for general conformance with the design concept and general compliance with applicable codes and requirements and shall not be construed as relieving the Design Engineer of full responsibility for accuracy and completeness of the drawings. This plan review approval does not prevent the City from requiring further code corrections in the field.
DATE: 5/14/14 BY: Khoi Q. Le

Kennedy/Jenks Consultants
200 SW MARKET, SUITE 500, PORTLAND OREGON 97201

LINE IS 2 INCHES AT FULL SIZE (IF NOT 2" - SCALE ACCORDINGLY)

DESIGNED: SG
DRAWN: DDM
CHECKED: TRM
CHECKED: BM
APPROVED: FN

REVISIONS

REV.	DESCRIPTION	BY	DATE	APP.

THIS DRAWING WAS ORIGINALLY SEALED BY FREDERICK C. NEAL, A REGISTERED PROFESSIONAL ENGINEER IN THE STATE OF OREGON, No. 85267

CONFORMED TO BID DOCUMENTS

Lake Oswego · Tigard Water Partnership
sharing water · connecting communities

SCHEDULE 3 - MAPLETON
CIVIL
WSP DETAILS

FILENAME: 119101620-3-C-73M
KENNEDY/JENKS PROJECT NUMBER: 1191016.20
SCALE: AS SHOWN
DRAWING/FIGURE NUMBER: 3-C-73M

PLOT DATE: April 16, 2014 - 4:57PM USER: DougM
FILE: N:\2011\1191016.20_LakeOswego_Partn\119101620-3-C-73M.dwg

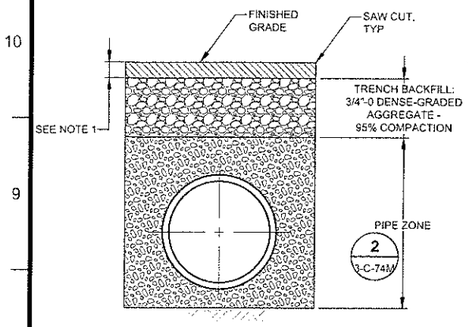

NOTES:

1. PROVIDE 3" MIN. LEVEL 2 AC. SEE SPECIFICATION SECTION 02701. 1

TRENCH TYPE B

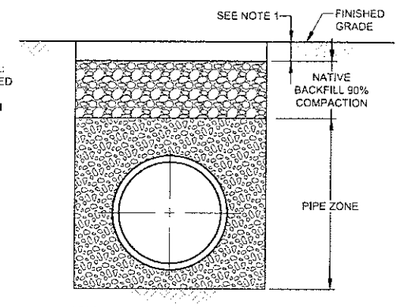

NOTES:

1. MATCH EXISTING SURFACE MATERIAL AND DEPTH UNLESS SHOWN OTHERWISE IN PLAN.

TRENCH TYPE C

TRENCH SECTIONS (1 / 3-C-74M)

NOT TO SCALE

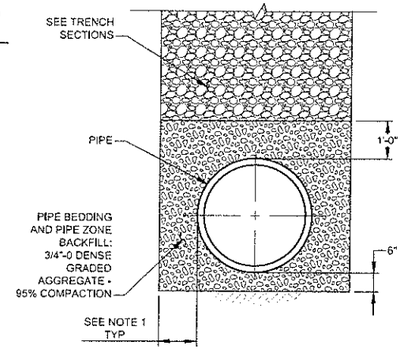

NOTES:

1. FWP AND RWP: 1'-0" MIN, 1'-6" MAX; ALL OTHER PIPES: 9" MIN, 1'-0" MAX

PIPE ZONE DETAIL (2 / 3-C-74M)

NOT TO SCALE

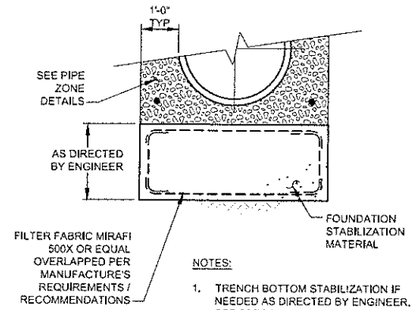

NOTES:

1. TRENCH BOTTOM STABILIZATION IF NEEDED AS DIRECTED BY ENGINEER. SEE SPECIFICATION 02302, PARAGRAPH 3.5.A.1.

TRENCH BOTTOM STABILIZATION (3 / 3-C-74M)

NOT TO SCALE

Lake Oswego - Tigard FWP and RWP
Schdule 3 - Mapleton Drive Pavement Depth

District	Street, Pipeline Stationing	Boring or Pothole #	DWG	Existing Measured AC Thickness (in)
West Linn	Mapleton Drive	FWP-66	3-C-27M	4
		TCB-01	3-C-28M	6
		TCB-02	3-C-28M	6
		FWP-65	3-C-28M	5
		FWP-64	3-C-29M	6.5
		MA-5	3-C-30M	6
		P134	3-C-31M	6
		MA-2	3-C-33M	4
		L13	3-C-33M	5
		MA-1	3-C-33M	3.5
		P136	3-C-33M	6
		P142	3-C-33M	3
		P143	3-C-33M	3

NOTE:

TABLE IS PROVIDED FOR CONTRACTOR'S INFORMATION ONLY.

APPROVED FOR CONSTRUCTION BY
CITY OF WEST LINN
This approval is only for general conformance with the design concept and general compliance with applicable codes and requirements and shall not be construed as relieving the Design Engineer of full responsibility for accuracy and completeness of the drawings. This plan review approval does not prevent the City from requiring further code corrections in the field.
DATE 5/14/14 BY: Khoi Q. Le

Kennedy/Jenks Consultants
200 SW MARKET, SUITE 500, PORTLAND OREGON 97201

LINE IS 2 INCHES AT FULL SIZE (IF NOT 2" - SCALE ACCORDINGLY)

DESIGNED: SG
DRAWN: DDM
CHECKED: TRM
CHECKED: BM
APPROVED: FN

REVISIONS

REV.	DESCRIPTION	BY	DATE	APP.
1	ADDENDUM NO 6-60	FN	02/14/14	

THIS DRAWING WAS ORIGINALLY SEALED BY FREDERICK C. NEAL, A REGISTERED PROFESSIONAL ENGINEER IN THE STATE OF OREGON, No. 85267

CONFORMED TO BID DOCUMENTS

Lake Oswego · Tigard Water Partnership
sharing water connecting communities

SCHEDULE 3 - MAPLETON
CIVIL
TRENCH SECTIONS

FILENAME 119101820-3-C-74M
KENNEDY/JENKS PROJECT NUMBER 119101820
SCALE AS SHOWN
DRAWING/FIGURE NUMBER 3-C-74M

PLOT DATE: April 16, 2014 - 4:57PM USER: DocuM
FILE: N:\0011\119101820_LakeOswego_FwRw\119101820-3-C-74M.dwg

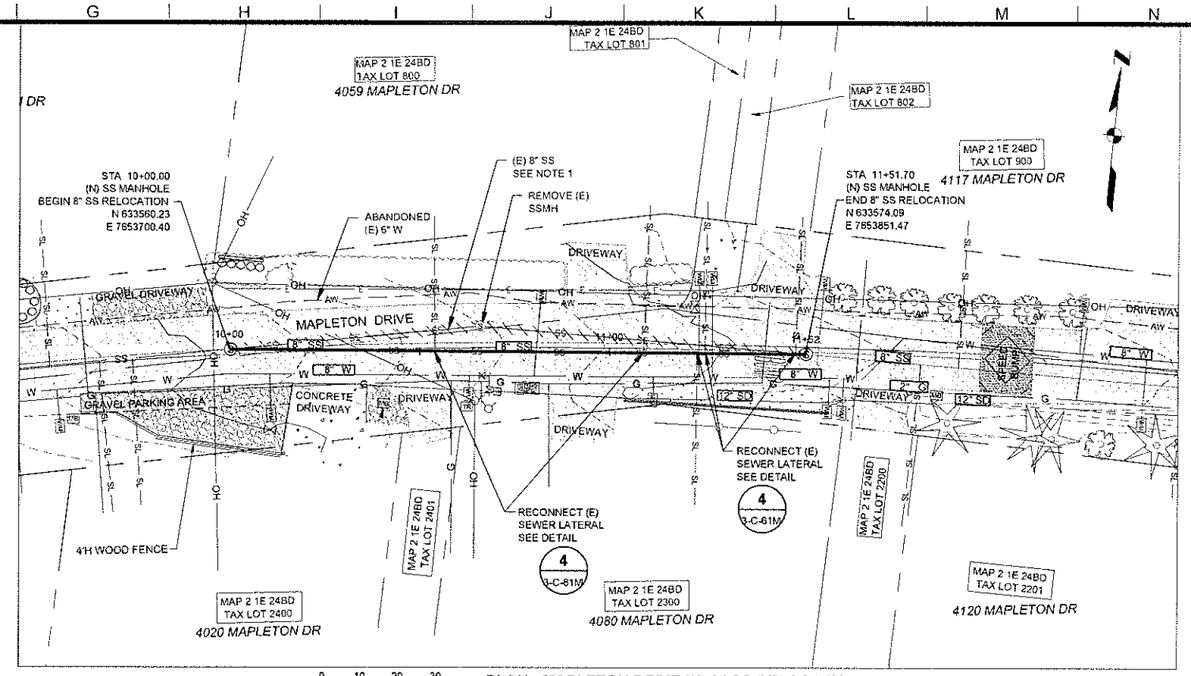

0 10 20 30
1"=20'

PLAN - MAPLETON DRIVE (N) 8" SS RELOCATION

NOTES:

1. REMOVE (E) SS AS NEEDED; ABANDON REMAINING (E) SS.
2. SEE DWG 3-C-29M FOR (N) 48" FWP PLAN
3. PROVIDE ASTM D3034 SDR 35 SANITARY SEWER PIPE.

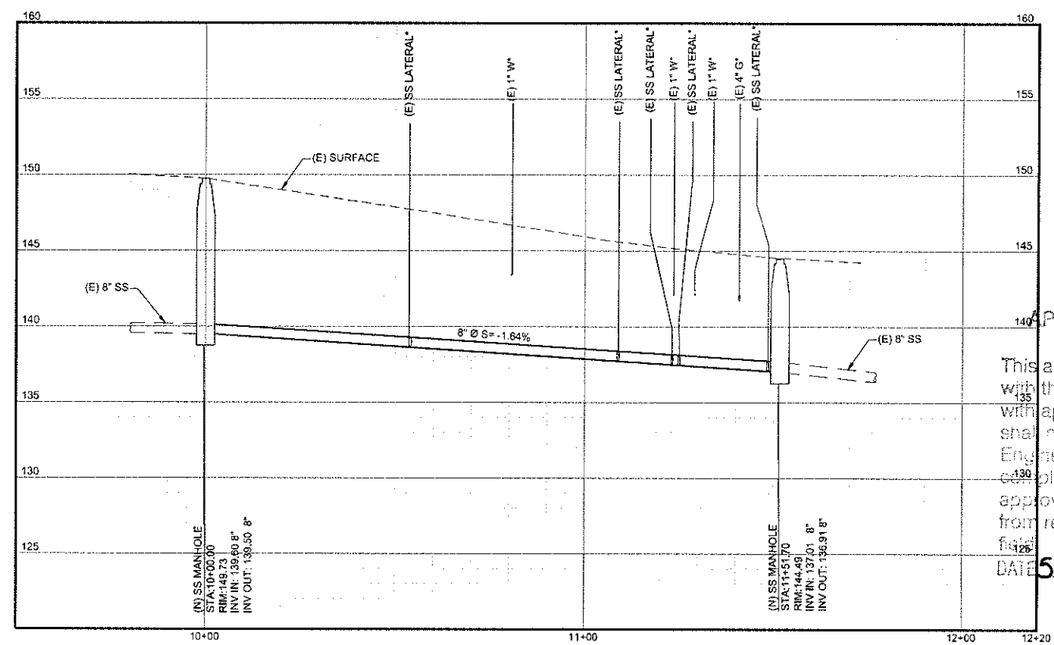

0 10 20 30
1"=20' HORIZ.

PROFILE

0 1 2 3 4 5
VERT 1"=5'

APPROVED FOR CONSTRUCTION BY
CITY OF WEST LINN
This approval is only for general conformance with the design concept and general compliance with applicable codes and requirements and shall not be construed as relieving the Design Engineer of full responsibility for accuracy and completeness of the drawings. This plan review approval does not prevent the City from requiring further code corrections in the field.
DATE 5/14/14 BY: Khoi Q. Le

Kennedy/Jenks Consultants
200 SW MARKET, SUITE 500, PORTLAND OREGON 97201

LINE IS 2 INCHES
AT FULL SIZE
(IF NOT 2" - SCALE ACCORDINGLY)

DESIGNED: SG
DRAWN: DDM
CHECKED: TRM
CHECKED: BM
APPROVED: FN

REVISIONS

REV.	DESCRIPTION	BY	DATE	APP.

THIS DRAWING WAS ORIGINALLY SEALED BY FREDERICK C. NEAL, A REGISTERED PROFESSIONAL ENGINEER IN THE STATE OF OREGON, No. 85267

CONFORMED TO BID DOCUMENTS

Lake Oswego · Tigard Water Partnership
sharing water · connecting communities

SCHEDULE 3 - MAPLETON
UTILITY RELOCATION
PLAN AND PROFILE
SANITARY SEWER
RELOCATION

FILENAME
119101820-3-R-01M
KENNEDY/JENKINS PROJECT NUMBER
119101620
SCALE
AS SHOWN
DRAWING/FIGURE NUMBER
3-R-01M

PLOT DATE: April 16, 2014 - 5:PM USER: DougM
FILE: N:\2011\119101820_LakeOswego_PWM\119101820-3-R-01M.dwg

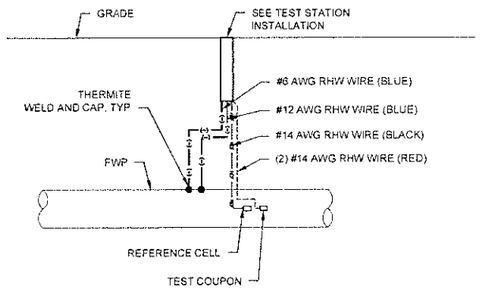

TS-T (STANDARD)

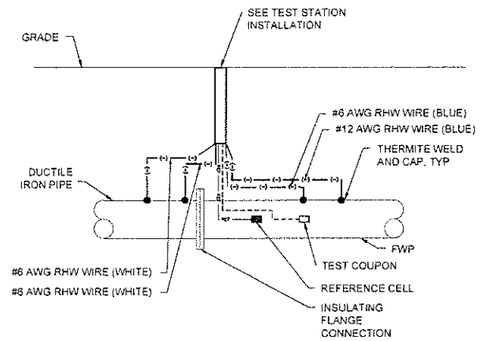

TS-ISO (ISOLATION JOINT)

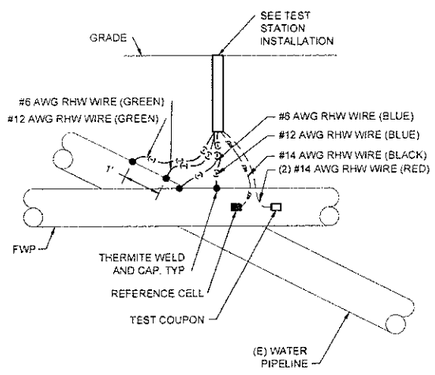

TS-W (WATER CROSSING)

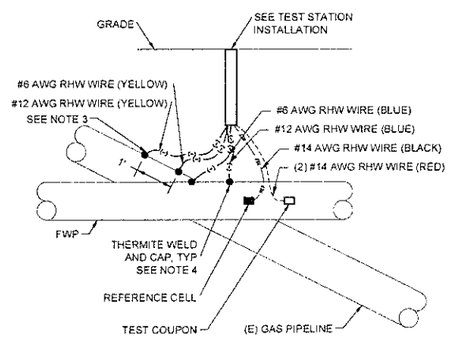

TS-G (GAS CROSSING)

NOTES:

1. TEST STATION SCHEMATICS ARE SIDE VIEWS.
2. LOCATE REFERENCE CELL AND TEST COUPON BETWEEN 2" AND 6" CLEAR OF FWP.
3. PROVIDE 12" SEPARATION BETWEEN REFERENCE CELL AND TEST COUPON
4. THERMITE WELDS TO GAS PIPELINES SHALL BE PERFORMED BY THE GAS UTILITY.
5. A SINGLE TEST STATION SHALL BE PROVIDED AT LOCATIONS WITH MORE THAN ONE CROSSING AND/OR ISOLATION, AS SHOWN IN THE PLAN AND PROFILE SHEETS. PROVIDE MULTIPLE PAIRS OF FOREIGN PIPE WIRES (WHITE, GREEN OR YELLOW AS APPROPRIATE) FROM A SINGLE TEST STATION.

TEST STATION SCHEMATICS (1 / VAR)

SCALE: NONE

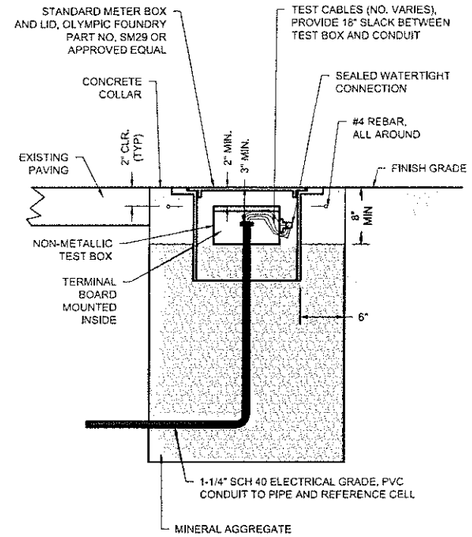

NOTE:

1. TEST STATION SHALL BE INSTALLED OUTSIDE OF TRAFFIC LANES AS DIRECTED BY THE ENGINEER.

TEST STATION INSTALLATION (2 / 3-CP-02M)

SCALE: NONE

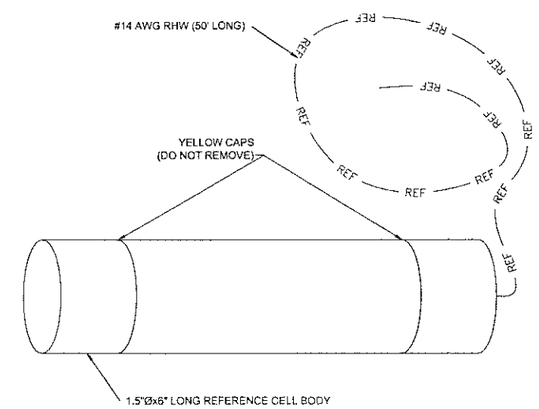

NOTES:

1.

REFERENCE CELL (3 / 3-CP-02M)

SCALE: NONE

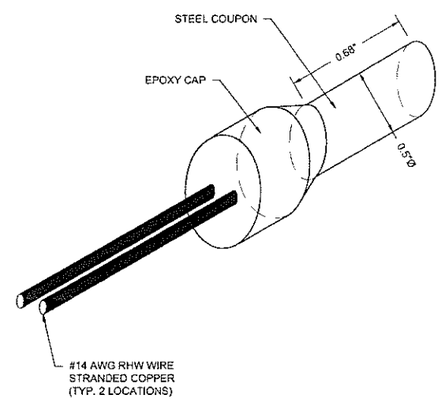

SURFACE AREA = 8.16 cm²

TEST COUPON (4 / 3-CP-02M)

SCALE: NONE

SCHEDULE OF CP TEST STATIONS	
LOCATION	TYPE
441+05	C
447+00	T
455+46	T
16+95	T
24+35	W

APPROVED FOR CONSTRUCTION BY CITY OF WEST LINN

This approval is only for general conformance with the design concept and general compliance with applicable codes and requirements and shall not be construed as relieving the Design Engineer of full responsibility for accuracy and completeness of the drawings. This plan review approval does not prevent the City from requiring further code corrections in the field.

DATE: 5/14/14 BY: Khoi Q. Le

Kennedy/Jenks Consultants
200 SW MARKET, SUITE 500, PORTLAND OREGON 97201

LINE IS 2 INCHES AT FULL SIZE (IF NOT 2" - SCALE ACCORDINGLY)

DESIGNED: SG
DRAWN: DDM
CHECKED: TRM
CHECKED: BM
APPROVED: FN

REVISIONS				
REV.	DESCRIPTION	BY	DATE	APP.

THIS DRAWING WAS ORIGINALLY SEALED BY DALE DOUGHTY, A REGISTERED PROFESSIONAL ENGINEER IN THE STATE OF OREGON, No. 12,283

CONFORMED TO BID DOCUMENTS

Lake Oswego · Tigard Water Partnership
sharing water · connecting communities

SCHEDULE 3 - MAPLETON
CATHODIC PROTECTION
CATHODIC PROTECTION TEST STATIONS

FILENAME: 119101620-3-CP-02M
KENNEDY/JENKS PROJECT NUMBER: 1191016.20
SCALE: AS SHOWN
DRAWING/FIGURE NUMBER: 3-CP-02M
26 OF 35

PLOT DATE: April 10, 2014 - 5:08PM USER: dougd1
FILE: N:\2011\191016.20_LakeOswego_PWW\119101620-3-CP-02M.dwg

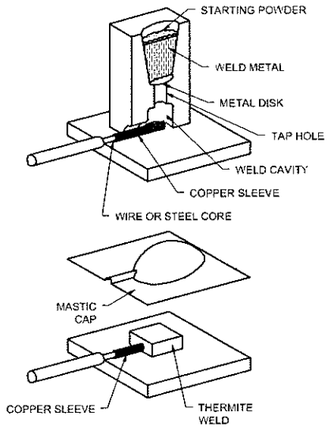

NOTES:

1. CLEAN WELD AREA TO BRIGHT METAL.
2. WELD CABLE TO PIPE USING 'CADWELD' OR APPROVED EQUAL EXOTHERMIC WELD.
3. ADAPTER SLEEVE REQUIRED FOR EXOTHERMIC WELDING OF #6 AWG WIRE OR SMALLER.
4. CLEAN SLAG FROM WELD AREA AND TEST FOR ADHESION.
5. INSULATE WELD WITH MASTIC CAP.
6. ALL CLEANED AREA NOT COVERED BY CAP SHALL BE COVERED WITH 125 MIL TAPE OR APPROVED EQUAL.

THERMITE WELD (1 / VAR)
SCALE: NONE

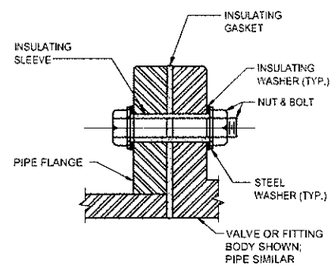

NOTE: PIPE COATING NOT SHOWN.

INSULATING FLANGE DETAIL (2 / VAR)
SCALE: NONE

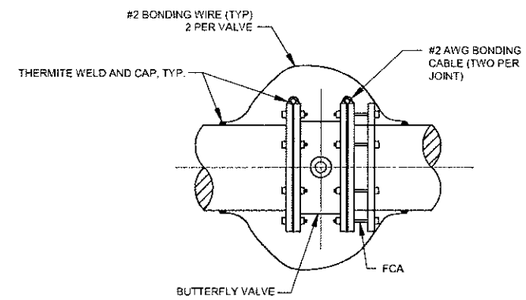

NOTE:

DETAIL APPLIES TO ALL FWP AND RWP BUTTERFLY VALVES

BUTTERFLY VALVE BONDING DETAIL (3 / 3-C-71M)
SCALE: NONE

APPROVED FOR CONSTRUCTION BY
CITY OF WEST LINN
This approval is only for general conformance with the design concept and general compliance with applicable codes and requirements and shall not be construed as relieving the Design Engineer of full responsibility for accuracy and completeness of the drawings. This plan review approval does not prevent the City from requiring further code corrections in the field.
DATE: 5/14/14 BY: Khoi Q. Le

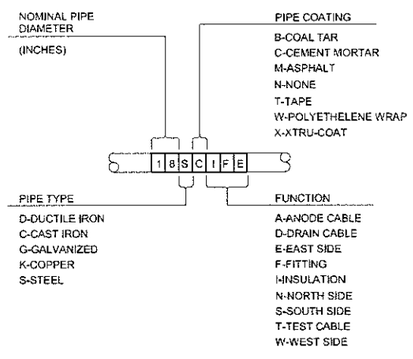

CABLE IDENTIFICATION DETAIL (4 / 3-CP-03M)
SCALE: NONE

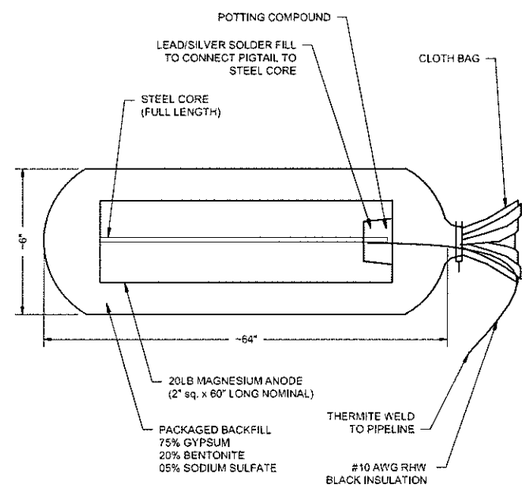

NOTE:
FOR OWNER-ORDERED USE ONLY

PREPACKAGED MAGNESIUM ANODE (5 / 3-CP-03M)
SCALE: NONE

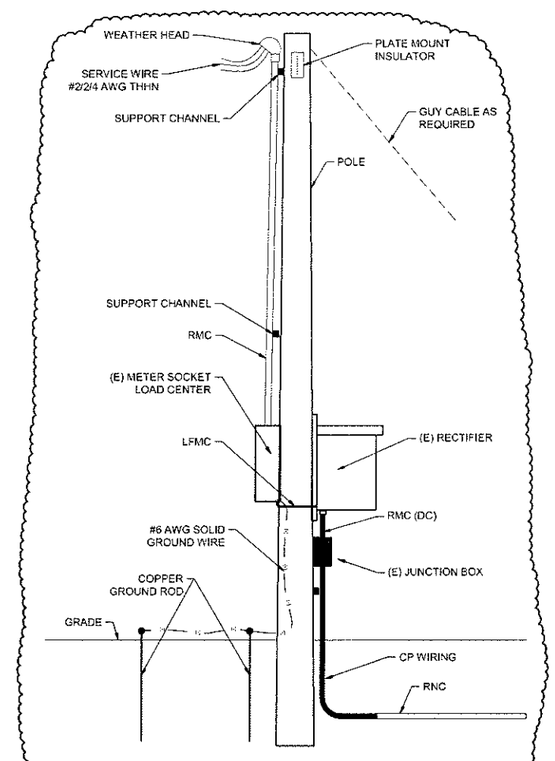

EXISTING RECTIFIER STATION (6 / 3-C-33M) △1
SCALE: NONE

Kennedy/Jenks Consultants 200 SW MARKET, SUITE 500, PORTLAND OREGON 97201	LINE IS 2 INCHES AT FULL SIZE (IF NOT 2" - SCALE ACCORDINGLY) DESIGNED: SG DRAWN: DDM CHECKED: TRM CHECKED: BM APPROVED: FN	REVISIONS REV. / DESCRIPTION / BY / DATE / APP. △1 ADDENDUM NO 2-09 / SG / 01/30/14 / FN	THIS DRAWING WAS ORIGINALLY SEALED BY DALE DOUGHTY, A REGISTERED PROFESSIONAL ENGINEER IN THE STATE OF OREGON, No. 12,283	CONFORMED TO BID DOCUMENTS	Lake Oswego · Tigard Water Partnership sharing water · connecting communities

SCHEDULE 3 - MAPLETON
CATHODIC PROTECTION
CATHODIC PROTECTION DETAILS

FILENAME: 119101620-3-CP-03M
KENNEDY/JENKS PROJECT NUMBER: 1191016.20
SCALE: AS SHOWN
DRAWING/FIGURE NUMBER: 3-CP-03M

PLOT DATE: April 16, 2014 - 5:09PM USER: DougM
FILE: N:\2011\1191016.20_LakeOswego_WWM\119101620-3-CP-03M.dwg

PLANTING LEGEND

SHRUBS / GROUNDCOVER (1-6 / 3-L-04M)

	QTY.	
		EXISTING SHRUB/TREE SEE PLAN NOTES FOR DIRECTIVE
	3	ESCALLONIA X EXONIENSIS 'FRADESII' PINK PRINCESS ESCALLONIA; SPACING AS SHOWN; 5 GAL. CONT.
	15	HELICTOTRICHON SEMPERVIRENS BLUE OAT GRASS; SPACING AS SHOWN; 1 GAL. CONT.
	60	FRAGARIA CHILOENSIS BEACH STRAWBERRY; 18" O.C.; 4" POTS
	17	JUNCUS PATENS 'ELK BLUE' CALIFORNIA GRAY RUSH; SPACING AS SHOWN; 1 GAL. CONT.
	30	MAHONIA AQUIFOLIUM 'COMPACTA' COMPACT OREGON GRAPE; SPACING AS SHOWN; 1 GAL. CONT.
	3	MAHONIA X MEDIA 'CHARITY' HYBRID MAHONIA; SPACING AS SHOWN; 3 GAL. CONT.
	3	NANDINA DOMESTICA HYBRID MAHONIA; SPACING AS SHOWN; 3 GAL. CONT.
	29	POLYSTICHUM MUNITUM WESTERN SWORD FERN; SPACING AS SHOWN; 1 GAL. CONT.
	3	CORNUS SERICEA RED-TWIG DOGWOOD; SPACING AS SHOWN; 3 GAL. CONT.
	3	VIBURNUM PLICATUM TOMENTOSUM DOUBLE-FILE VIBURNUM; SPACING AS SHOWN; 5 GAL. CONT.
		GRAVEL 1/2" MINUS - 4" DEPTH MINIMUM

GENERAL NOTES:

1. NEW PLANTINGS NOT UTILIZING A FULLY AUTOMATIC IRRIGATION SYSTEM SHALL BE HAND WATERED UNTIL ESTABLISHED.
2. PROTECT AND PRESERVE ALL EXISTING IRRIGATION SYSTEMS. INTEGRATE ALL NEW LANDSCAPING THAT FALLS WITHIN EXISTING IRRIGATION ZONES.
3. CONTRACTOR SHALL PROVIDE TOPSOIL, SOIL AMENDMENTS AND MULCH AS SPECIFIED.
4. ALL PLANTS SHALL BE INSTALLED IN ACCORDANCE WITH THE DETAILS AND SPECIFICATIONS PROVIDED AS PART OF THE CONSTRUCTION DOCUMENT PACKAGE.
5. QUANTITIES ARE LISTED FOR THE CONTRACTOR'S CONVENIENCE ONLY. ALL COUNTS MUST BE VERIFIED BY THE CONTRACTOR. IN THE CASE OF A DISCREPANCY BETWEEN THE LEGEND AND THE PLAN, PLANTS INDICATED ON THE PLAN SHALL SUPERCEDE QUANTITIES LISTED IN THE LEGEND.
6. TREE REMOVAL AND PROTECTION SHALL BE PER ARBORIST RECOMMENDATION. REFER TO TREE PROTECTION PLAN AND SPECIFICATIONS.

APPROVED FOR CONSTRUCTION BY
CITY OF WEST LINN
This approval is only for general conformance with the design concept and general compliance with applicable codes and requirements and shall not be construed as relieving the Design Engineer of full responsibility for accuracy and completeness of the drawings. This plan review approval does not prevent the City from requiring further code corrections in the field.
DATE: 5/14/14 BY: Chris S. U

NOT USED (1)

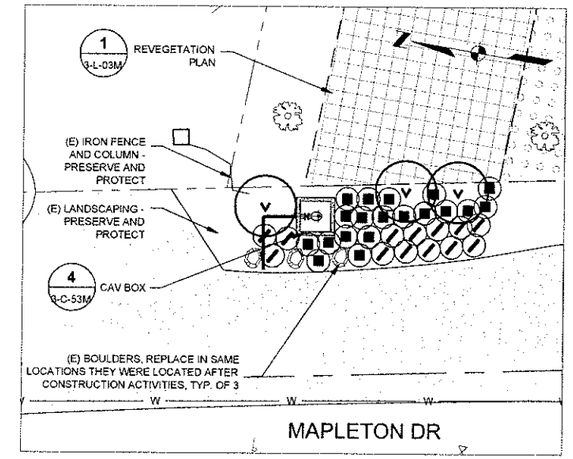

PLAN - NEAR 5075 MAPLETON DR (2 / 3-C-33)

0 10' 20' 1"=10'-0"

TRANSPLANTING NOTES:

1) TRANSPLANTING SHALL BE DONE BY OR UNDER THE SUPERVISION OF A LANDSCAPE INDUSTRY CERTIFIED HORTICULTURAL TECHNICIAN.
2) USE STANDARD HORTICULTURAL AND NURSERY INDUSTRY PRACTICES AND CARE WHILE TRANSPLANTING SHRUBS.
3) PLACE ROOTBALLS IN TEMPORARY STOCKPILE OF IMPORTED COMPOST - SEE PLANTING SPECIFICATIONS.
4) CONTRACTOR TO ASSUME SHRUBS WILL BE STORED IN COMPOST FOR A MAXIMUM OF ONE MONTH.
5) CONTRACTOR IS RESPONSIBLE FOR TEMPORARILY WATERING PLANTS DURING THE STORAGE PERIOD.
6) CONTRACTOR TO COORDINATE WITH OWNER'S REPRESENTATIVE FOR LOCATION OF TEMPORARY STOCKPILE AREA FOR PLANT STORAGE.

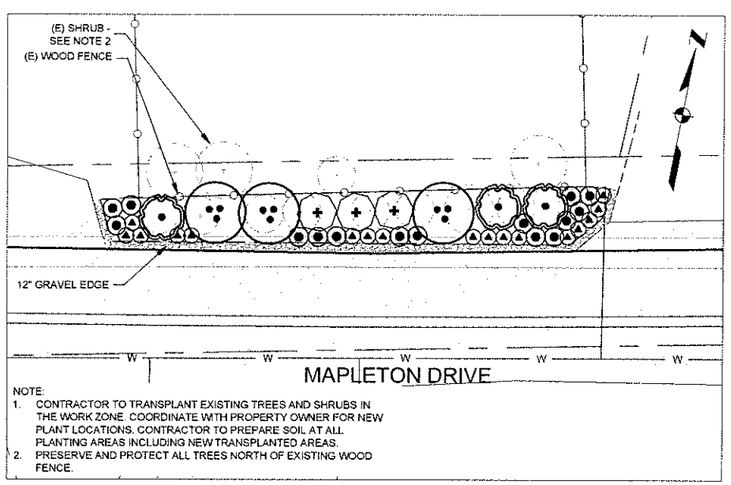

NOTE:
1. CONTRACTOR TO TRANSPLANT EXISTING TREES AND SHRUBS IN THE WORK ZONE. COORDINATE WITH PROPERTY OWNER FOR NEW PLANT LOCATIONS. CONTRACTOR TO PREPARE SOIL AT ALL PLANTING AREAS INCLUDING NEW TRANSPLANTED AREAS.
2. PRESERVE AND PROTECT ALL TREES NORTH OF EXISTING WOOD FENCE.

PLAN - LANDSCAPE IN FRONT OF 3963 MAPLETON DR (3 / 3-C-29)

0 10' 20' 1"=10'-0"

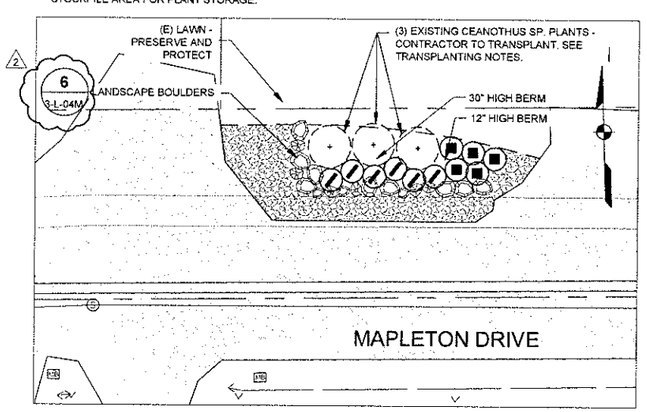

PLAN - LANDSCAPE IN FRONT OF 4191 MAPLETON DR (4 / 3-C-30)

0 10' 20' 1"=10'-0"

4

NOTE

1) EXISTING TREE 8 INCLUDED ON FIGURE 19 OF THE ARBORIST DRAWINGS IN APPENDIX D OF THE CONTRACT DOCUMENTS WILL BE REMOVED BY OTHERS. THE OTHER EXISTING TREES, ANY REMAINING TREE STUMPS AND OTHER EXISTING LANDSCAPING WITHIN THIS LANDSCAPE AREA SHALL BE REMOVED BY THE CONTRACTOR PRIOR TO INSTALLATION OF NEW LANDSCAPING SHOWN IN DETAIL.

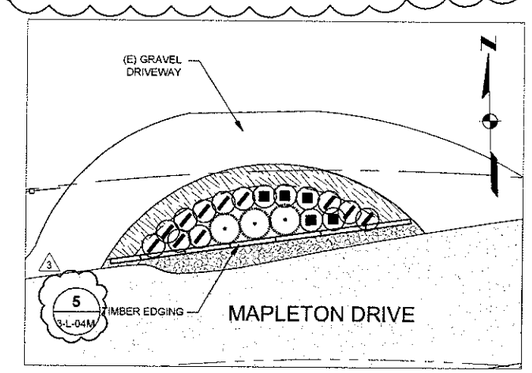

PLAN - LANDSCAPE IN FRONT OF 4945 MAPLETON DR (5 / 3-C-32)

0 10' 20' 1"=10'-0"

Kennedy/Jenks Consultants
200 SW MARKET, SUITE 500, PORTLAND OREGON 97201

GREENWORKS GreenWorks, P.C.
Landscape Architecture
Environmental Design

LINE IS 2 INCHES AT FULL SIZE (IF NOT 2" - SCALE ACCORDINGLY)

DESIGNED: BJ
DRAWN: WS
CHECKED: SK
CHECKED: MF
APPROVED: FN

REVISIONS

REV.	DESCRIPTION	BY	DATE	APP.
4	ADDENDUM 6-63	FN	2/14/14	
3	ADDENDUM 6-62	FN	2/14/14	
2	ADDENDUM 6-61	FN	2/14/14	
1	ADDENDUM NO 4-41	BJ	2/4/14	FN

THIS DRAWING WAS ORIGINALLY SEALED BY F. MICHAEL FAHA, A REGISTERED LANDSCAPE ARCHITECT IN THE STATE OF OREGON, No. 242

CONFORMED TO BID DOCUMENTS

Lake Oswego · Tigard Water Partnership
sharing water · connecting communities

SCHEDULE 3 - MAPLETON
LANDSCAPING
PLANTING PLANS

FILENAME 119101620-3-L-02M
KENNEDY/JENKS PROJECT NUMBER 1191016.20
SCALE AS SHOWN
DRAWING FIGURE NUMBER 3-L-02M

PLOT DATE: April 18, 2014 12:15PM USER: wws
FILE: G:\Projects\119172.0_LO_Rare_and_Fresh_Water\04_Drawings\01_CAD\02_Sch_3\02_Plot_Sheets\119101620-3-L-02M.dwg

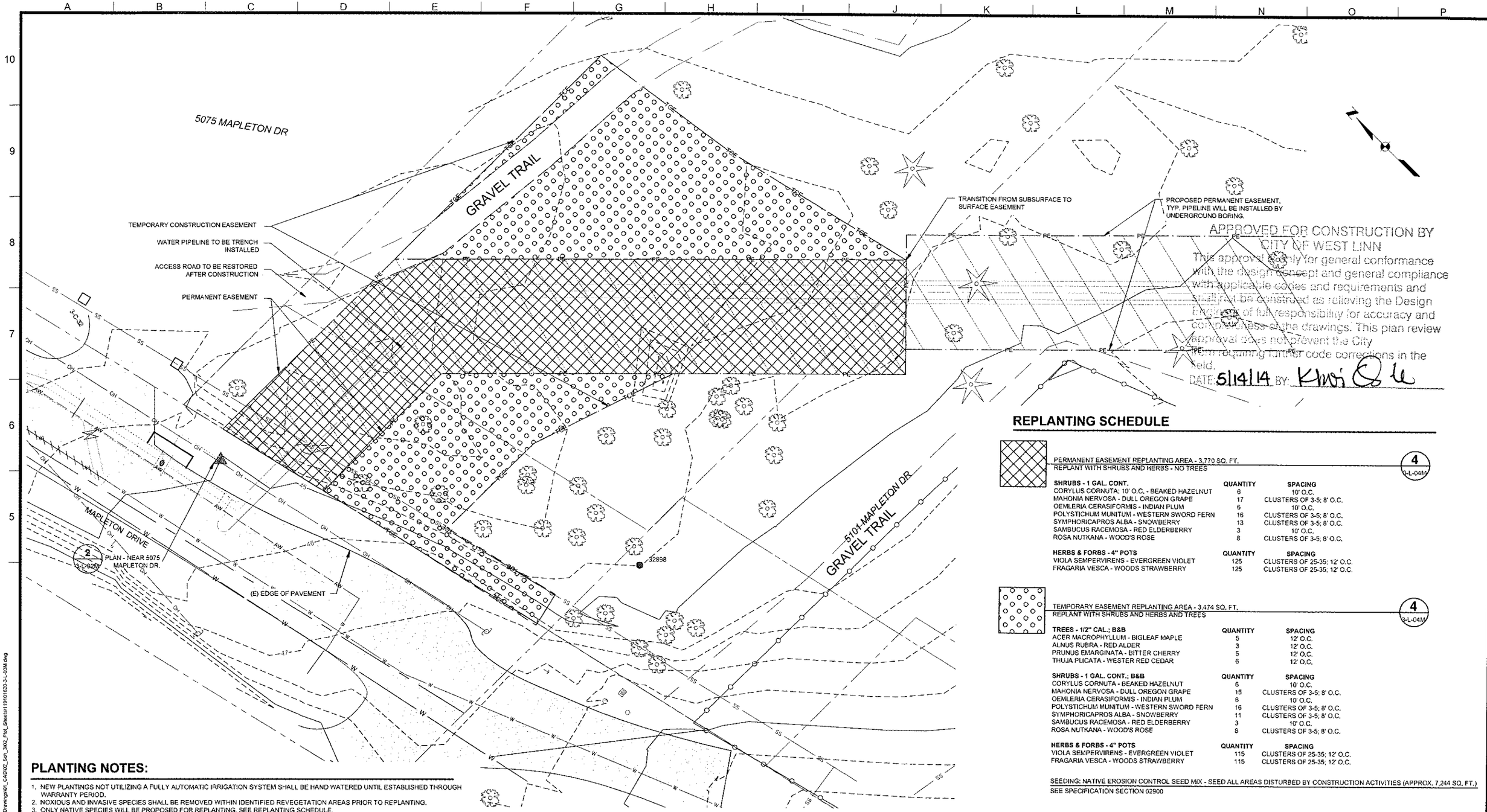

REVEGETATION PLAN

1
3-C-33M

0 10' 20'
1"=10'-0"

REPLANTING SCHEDULE

PERMANENT EASEMENT REPLANTING AREA - 3,770 SQ. FT.
REPLANT WITH SHRUBS AND HERBS - NO TREES

4
3-L-04M

SHRUBS - 1 GAL. CONT.	QUANTITY	SPACING
CORYLUS CORNUTA; 10' O.C. - BEAKED HAZELNUT	6	10' O.C.
MAHONIA NERVOSA - DULL OREGON GRAPE	17	CLUSTERS OF 3-5; 8' O.C.
OEMLERIA CERASIFORMIS - INDIAN PLUM	6	10' O.C.
POLYSTICHUM MUNITUM - WESTERN SWORD FERN	16	CLUSTERS OF 3-5; 8' O.C.
SYMPHORICAPROS ALBA - SNOWBERRY	13	CLUSTERS OF 3-5; 8' O.C.
SAMBUCUS RACEMOSA - RED ELDERBERRY	3	10' O.C.
ROSA NUTKANA - WOOD'S ROSE	8	CLUSTERS OF 3-5; 8' O.C.

HERBS & FORBS - 4" POTS	QUANTITY	SPACING
VIOLA SEMPERVIRENS - EVERGREEN VIOLET	125	CLUSTERS OF 25-35; 12' O.C.
FRAGARIA VESCA - WOODS STRAWBERRY	125	CLUSTERS OF 25-35; 12' O.C.

TEMPORARY EASEMENT REPLANTING AREA - 3,474 SQ. FT.
REPLANT WITH SHRUBS AND HERBS AND TREES

4
3-L-04M

TREES - 1/2" CAL.; B&B	QUANTITY	SPACING
ACER MACROPHYLLUM - BIGLEAF MAPLE	5	12' O.C.
ALNUS RUBRA - RED ALDER	3	12' O.C.
PRUNUS EMARGINATA - BITTER CHERRY	5	12' O.C.
THUJA PLICATA - WESTER RED CEDAR	6	12' O.C.

SHRUBS - 1 GAL. CONT.; B&B	QUANTITY	SPACING
CORYLUS CORNUTA - BEAKED HAZELNUT	6	10' O.C.
MAHONIA NERVOSA - DULL OREGON GRAPE	15	CLUSTERS OF 3-5; 8' O.C.
OEMLERIA CERASIFORMIS - INDIAN PLUM	6	10' O.C.
POLYSTICHUM MUNITUM - WESTERN SWORD FERN	16	CLUSTERS OF 3-5; 8' O.C.
SYMPHORICAPROS ALBA - SNOWBERRY	11	CLUSTERS OF 3-5; 8' O.C.
SAMBUCUS RACEMOSA - RED ELDERBERRY	3	10' O.C.
ROSA NUTKANA - WOOD'S ROSE	8	CLUSTERS OF 3-5; 8' O.C.

HERBS & FORBS - 4" POTS	QUANTITY	SPACING
VIOLA SEMPERVIRENS - EVERGREEN VIOLET	115	CLUSTERS OF 25-35; 12' O.C.
FRAGARIA VESCA - WOODS STRAWBERRY	115	CLUSTERS OF 25-35; 12' O.C.

SEEDING: NATIVE EROSION CONTROL SEED MIX - SEED ALL AREAS DISTURBED BY CONSTRUCTION ACTIVITIES (APPROX. 7,244 SQ. FT.)
SEE SPECIFICATION SECTION 02900

PLANTING NOTES:

1. NEW PLANTINGS NOT UTILIZING A FULLY AUTOMATIC IRRIGATION SYSTEM SHALL BE HAND WATERED UNTIL ESTABLISHED THROUGH WARRANTY PERIOD.
2. NOXIOUS AND INVASIVE SPECIES SHALL BE REMOVED WITHIN IDENTIFIED REVEGETATION AREAS PRIOR TO REPLANTING.
3. ONLY NATIVE SPECIES WILL BE PROPOSED FOR REPLANTING. SEE REPLANTING SCHEDULE.
4. ONLY SHRUBS AND HERBS SHALL BE PLANTED WITHIN THE TEMPORARY EASEMENT.
5. AVOID DAMAGE TO ROOTS OF EXISTING TREES WHEN PLANTING. AVOID PLACING NEW TREES WITHIN DRIPLINE OF EXISTING TREES.
6. SPACE ALL PLANTINGS PER SCHEDULE TO ACHIEVE UNIFORM COVERAGE.
7. TREE REMOVAL BY OTHERS.
8. ALL TREES TO BE WELL-BRANCHED

Kennedy/Jenks Consultants
200 SW MARKET, SUITE 500, PORTLAND OREGON 97201

GREENWORKS GreenWorks, P.C.
Landscape Architecture
Environmental Design

LINE IS 2 INCHES AT FULL SIZE (IF NOT 2" - SCALE ACCORDINGLY)

DESIGNED: BJ
DRAWN: WS
CHECKED: SK
CHECKED: MF
APPROVED: FN

REVISIONS				
REV.	DESCRIPTION	BY	DATE	APP.

THIS DRAWING WAS ORIGINALLY SEALED BY F. MICHAEL FAHA, A REGISTERED LANDSCAPE ARCHITECT IN THE STATE OF OREGON, No. 242

CONFORMED TO BID DOCUMENTS

Lake Oswego · Tigard Water Partnership
sharing water · connecting communities

SCHEDULE 3 - MAPLETON

LANDSCAPING

LANDSCAPE RESTORATION FOR MAPLETON EASEMENT MAPLETON DR

FILENAME 119101620-3-L-03M
KENNEDY/JENKS PROJECT NUMBER 1191016.20
SCALE AS SHOWN
DRAWING/FIGURE NUMBER 3-L-03M

PLOT DATE: April 18, 2014 - 12:56PM USER: wesa
FILE: G:\Projects\111170_Lo_Swc_and_Water\04_Drawings\01_CAD\02_Sch_3\02_Plot_Sheets\119101620-3-L-03M.dwg

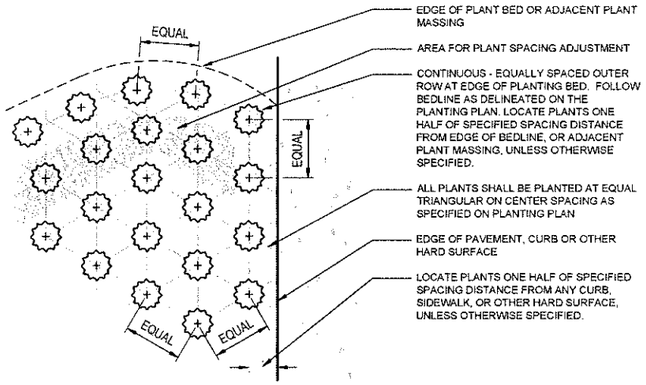

GROUNDCOVER PLANTING (1)
NOT TO SCALE

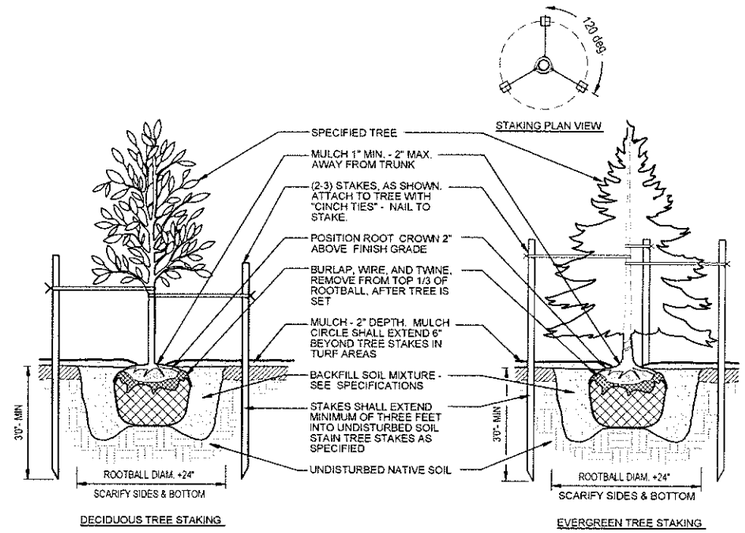

DECIDUOUS TREE PLANTING - STAKING (2)
NOT TO SCALE

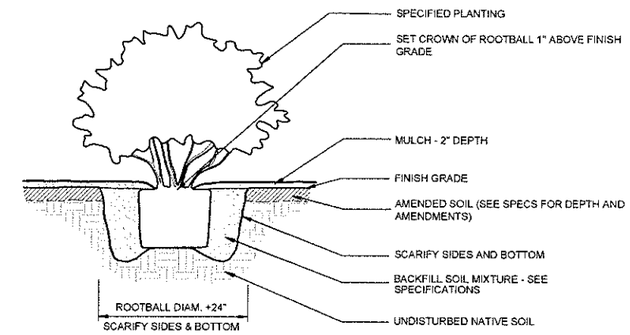

CONTAINER PLANTING (3)
NOT TO SCALE

NOTE:
1. QUANTITIES OF PLANTS VARY, SEE PLAN LEGEND. DO NOT OVER-PLANT ONE AREA OF REPLANTING ZONE WITH A PARTICULAR PLANT SPECIES OR CLUSTER GROUPING ONLY; DISTRIBUTE SHRUB AND TREES SPECIES QUANTITIES EVENLY THROUGHOUT REPLANTING ZONE AREA TO ACHIEVE UNIFORM COVERAGE WHILE MAINTAINING SPECIFIED SPACING/CLUSTERING AND RANDOM PLANTING AESTHETIC.

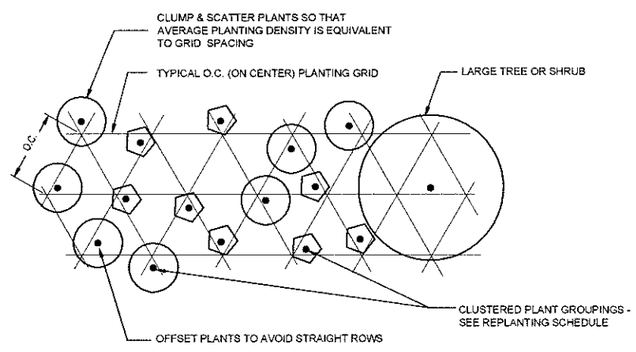

TYPICAL CLUSTERED PLANTING LAYOUT (4 / 3-L-03M)
NOT TO SCALE

NOTE:
1. INSERT AT A MINIMUM TWO REBAR PINS ON EACH END OF TIMBER MEMBERS THAT ARE NOT LONG ENOUGH FOR 4' REBAR SPACING.
2. PROVIDE 45° TAPER AT LAST TIMBER(S)

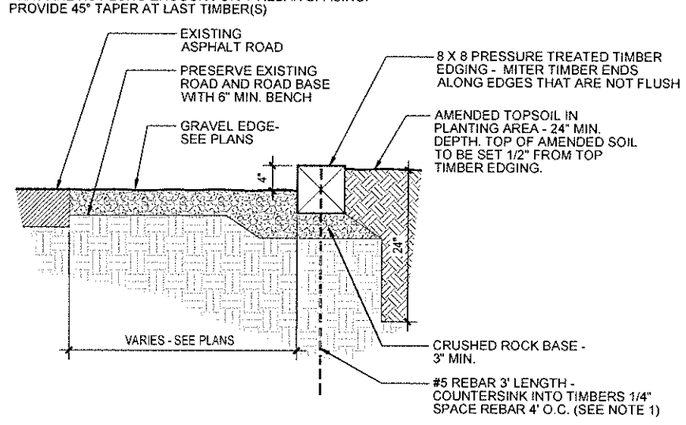

TIMBER EDGING (5 / 3-L-02M)
NOT TO SCALE

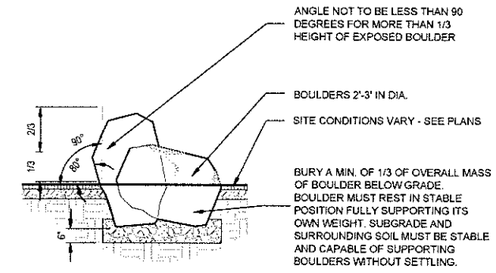

LANDSCAPE BOULDERS (6 / 3-L-02M)
NOT TO SCALE

APPROVED FOR CONSTRUCTION BY
CITY OF WEST LINN
This approval is only for general conformance with the design concept and general compliance with applicable codes and requirements and shall not be construed as relieving the Design Engineer of full responsibility for accuracy and completeness of the drawings. This plan review approval does not prevent the City from requiring further code corrections in the field.
DATE: 5/14/14 BY: Khoi Q. Le

Kennedy/Jenks Consultants
200 SW MARKET, SUITE 500, PORTLAND OREGON 97201

GREENWORKS — GreenWorks, P.C. Landscape Architecture Environmental Design

LINE IS 2 INCHES AT FULL SIZE (IF NOT 2" - SCALE ACCORDINGLY)
DESIGNED: BJ
DRAWN: WS
CHECKED: SK
CHECKED: MF
APPROVED: FN

REVISIONS

REV.	DESCRIPTION	BY	DATE	APP.

THIS DRAWING WAS ORIGINALLY SEALED BY F. MICHAEL FAHA, A REGISTERED LANDSCAPE ARCHITECT IN THE STATE OF OREGON, No. 242

CONFORMED TO BID DOCUMENTS

Lake Oswego · Tigard Water Partnership
sharing water · connecting communities

SCHEDULE 3
LANDSCAPING
PLANTING DETAILS

FILENAME 119101620-3-L-04M
KENNEDY/JENKS PROJECT NUMBER 1191016.20
SCALE NOT TO SCALE
DRAWING FIGURE NUMBER 3-L-04M

PLOT DATE: April 18, 2014 - 12:16PM USER: wess
FILE: G:\Projects\1119_O_Tigard_WTP\04_Drawings\Water\04_Drawings\01_CAD\02_Sch_3\02_Plot_Sheets\119101620-3-L-04M.dwg

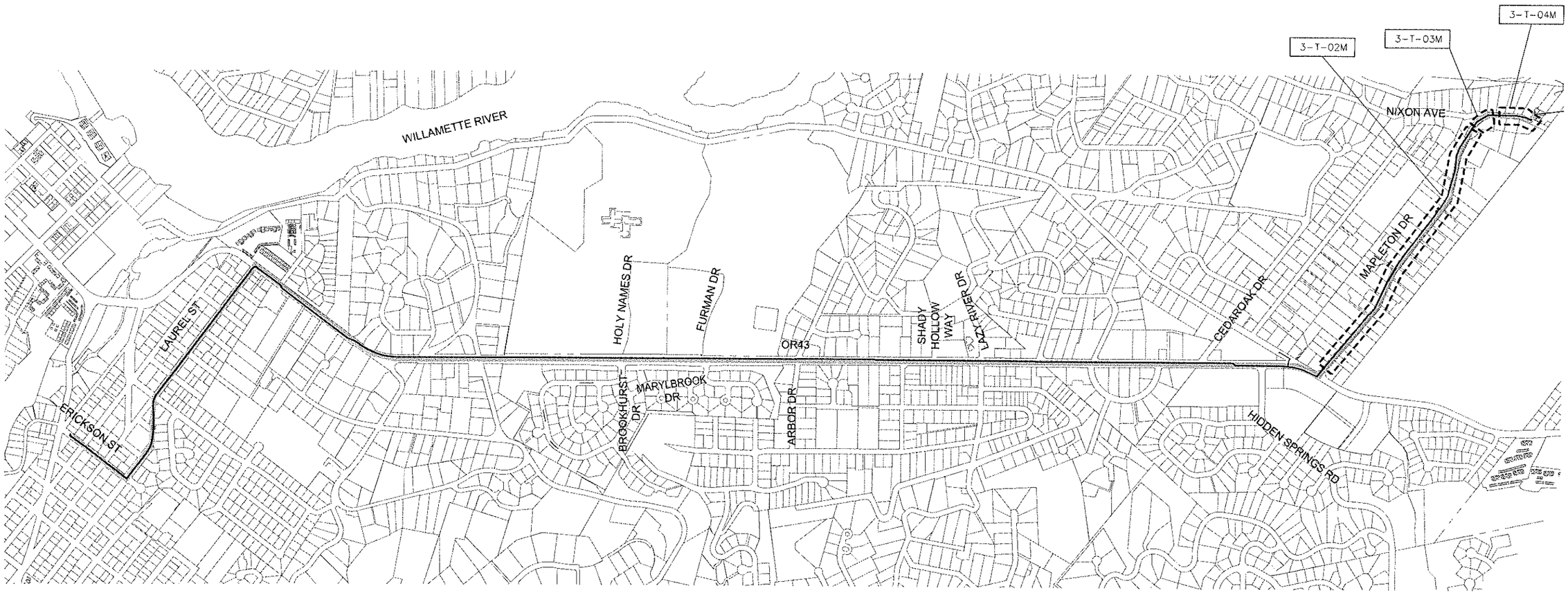

APPROVED FOR CONSTRUCTION BY
CITY OF WEST LINN
This approval is only for general conformance with the design concept and general compliance with applicable codes and requirements and shall not be construed as relieving the Design Engineer of full responsibility for accuracy and completeness of the drawings. This plan review approval does not prevent the City from requiring further code corrections in the field.
DATE: 5/14/14 BY: Khoi Le

NTS

GENERAL NOTES

1. SEE DRAWING 3-T-05M FOR TYPICAL TRAFFIC CONTROL DETAILS.

LEGEND

	SCHEDULE 3 WATER PIPE ALIGNMENT
3-T-(XX)	SEE SHEET 3-T-(XX) FOR TRAFFIC CONTROL PLANS
	TRAFFIC CONTROL SEGMENT

DKS
720 SW Washington Street, Suite 500
Portland, Oregon 97205
(503) 243-3500
www.dksassociates.com

LINE IS 2 INCHES AT FULL SIZE (IF NOT 2" - SCALE ACCORDINGLY)

DESIGNED: MTL
DRAWN: DKS CAD
CHECKED: MTL
CHECKED: MTL
APPROVED: BKC

REVISIONS

REV.	DESCRIPTION	BY		APP.

THIS DRAWING WAS ORIGINALLY SEALED BY BRIAN K. COPELAND, A REGISTERED PROFESSIONAL ENGINEER IN THE STATE OF OREGON, NO. 18503PE

CONFORMED TO BID DOCUMENTS

Lake Oswego · Tigard Water Partnership
sharing water · connecting communities

SCHEDULE 3-MAPLETON
TRAFFIC CONTROL
DRAWING INDEX

DKS PROJECT NUMBER 11130-000
SCALE AS SHOWN
DRAWING/FIGURE NUMBER 3-T-01M

PLOT DATE: April 21, 2014 - 4:56PM USER: rdi
FILE: K:\Projects\2011\11130-000 (Lake Oswego Water Pipeline Traffic Control Design)\ACAD\3-T-01M.dwg

APPROVED FOR CONSTRUCTION BY
CITY OF WEST LINN
This approval is only for general conformance with the design concept and general compliance with applicable codes and requirements and shall not be construed as relieving the Design Engineer of full responsibility for accuracy and completeness of the drawings. This plan review approval does not prevent the City from requiring further code corrections in the field.
DATE: 5/14/14 BY: Knoj Q.6

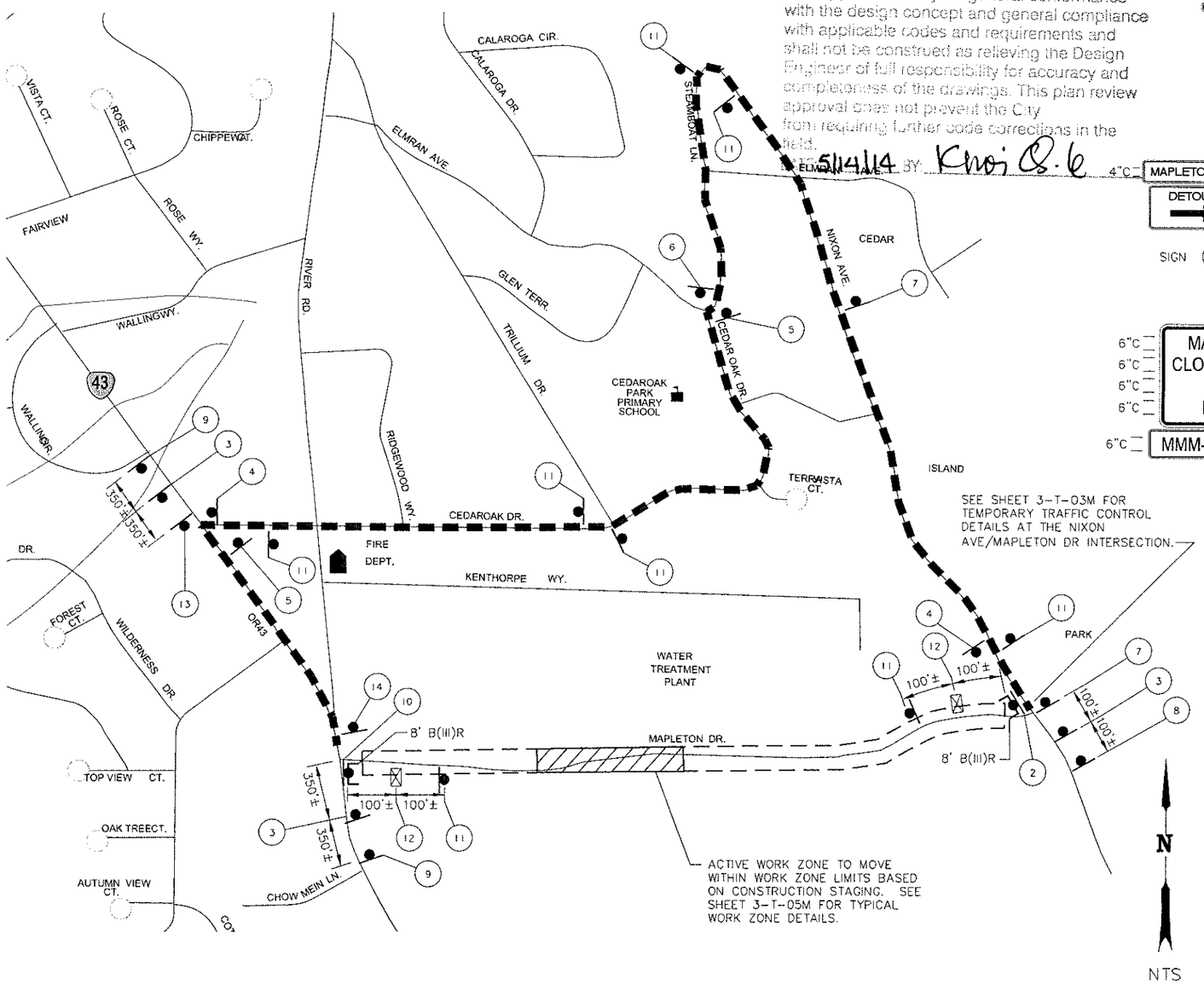

SEE SHEET 3-T-03M FOR TEMPORARY TRAFFIC CONTROL DETAILS AT THE NIXON AVE/MAPLETON DR INTERSECTION.

ACTIVE WORK ZONE TO MOVE WITHIN WORK ZONE LIMITS BASED ON CONSTRUCTION STAGING. SEE SHEET 3-T-05M FOR TYPICAL WORK ZONE DETAILS.

SIGN DETAILS (THIS SHEET ONLY)

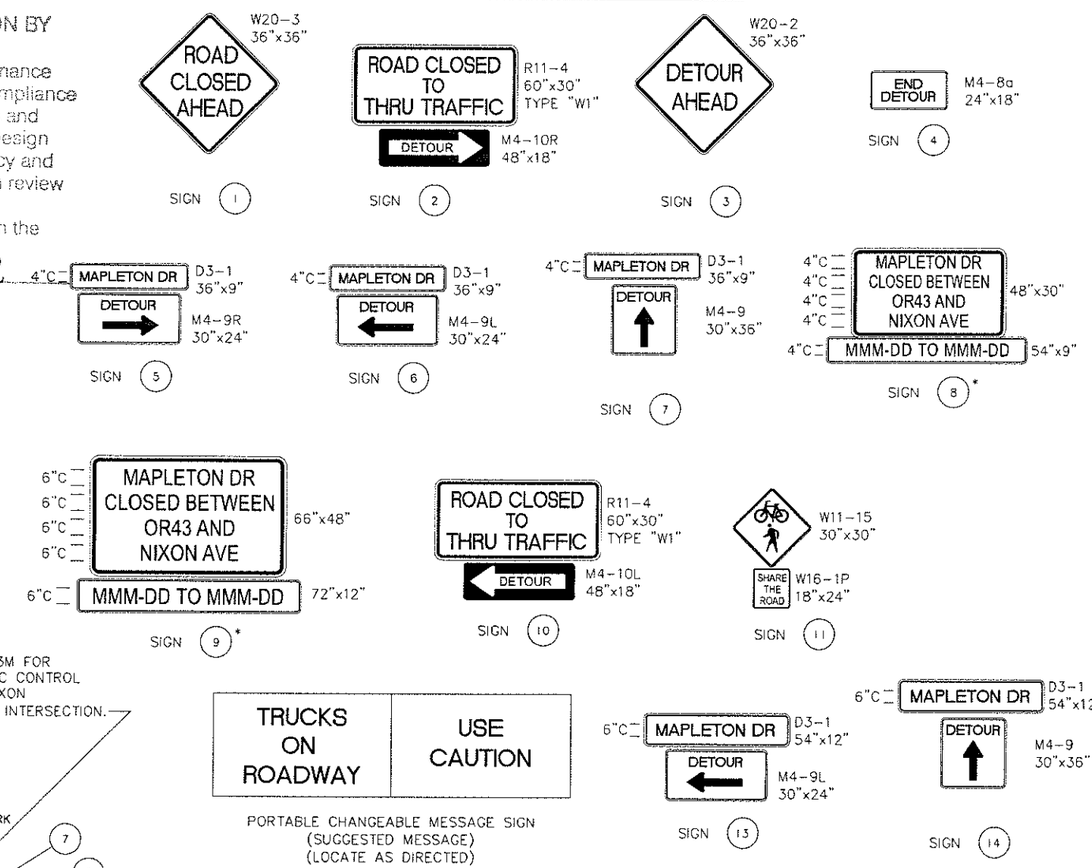

GENERAL NOTES:

1. SEE SPECIAL PROVISIONS FOR LANE CLOSURE RESTRICTIONS.
2. ALL SIGNS SHALL BE TYPE "04" UNLESS OTHERWISE NOTED.
3. SEE SHEET 3-T-05M FOR ADDITIONAL TYPICAL TRAFFIC CONTROL DETAILS.
4. SEE SPECIAL PROVISIONS AND OREGON STANDARD DRAWING TM844 FOR PEDESTRIAN ACCESS REQUIREMENTS DURING CONSTRUCTION.

* INSTALL SIGN TWO WEEKS IN ADVANCE OF CLOSURE. DATES TO BE FILLED OUT BASED ON CONSTRUCTION SCHEDULE.

LEGEND

- DETOUR ROUTE
- ACTIVE WORK ZONE
- WORK ZONE LIMITS
- TEMPORARY SIGN ON TEMPORARY SUPPORT
- TYPE III BARRICADE L, R, LR
- PORTABLE CHANGEABLE MESSAGE SIGN

DKS
720 SW Washington Street, Suite 500
Portland, Oregon 97205
(503) 243-3500
www.dksassociates.com

LINE IS 2 INCHES AT FULL SIZE (IF NOT 2" - SCALE ACCORDINGLY)

DESIGNED: MTL
DRAWN: DKS CAD
CHECKED: MTL
CHECKED: MTL
APPROVED: BKC

REVISIONS

REV.	DESCRIPTION	BY		APP.

THIS DRAWING WAS ORIGINALLY SEALED BY BRIAN K. COPELAND, A REGISTERED PROFESSIONAL ENGINEER IN THE STATE OF OREGON, NO. 18503PE

CONFORMED TO BID DOCUMENTS

Lake Oswego · Tigard Water Partnership
sharing water · connecting communities

SCHEDULE 3-MAPLETON
TRAFFIC CONTROL
DETOUR PLAN
MAPLETON DR BETWEEN OR43 AND NIXON AVE

DKS PROJECT NUMBER 11130-000
SCALE AS SHOWN
DRAWING/FIGURE NUMBER 3-T-02M
32 OF 35

PLOT DATE: April 21, 2014 - 4:50PM USER: reh
FILE: X:\Projects\2011\11130-000 Lake Oswego Water Pipeline Traffic Control Design\ACAD\3-T-02M.dwg

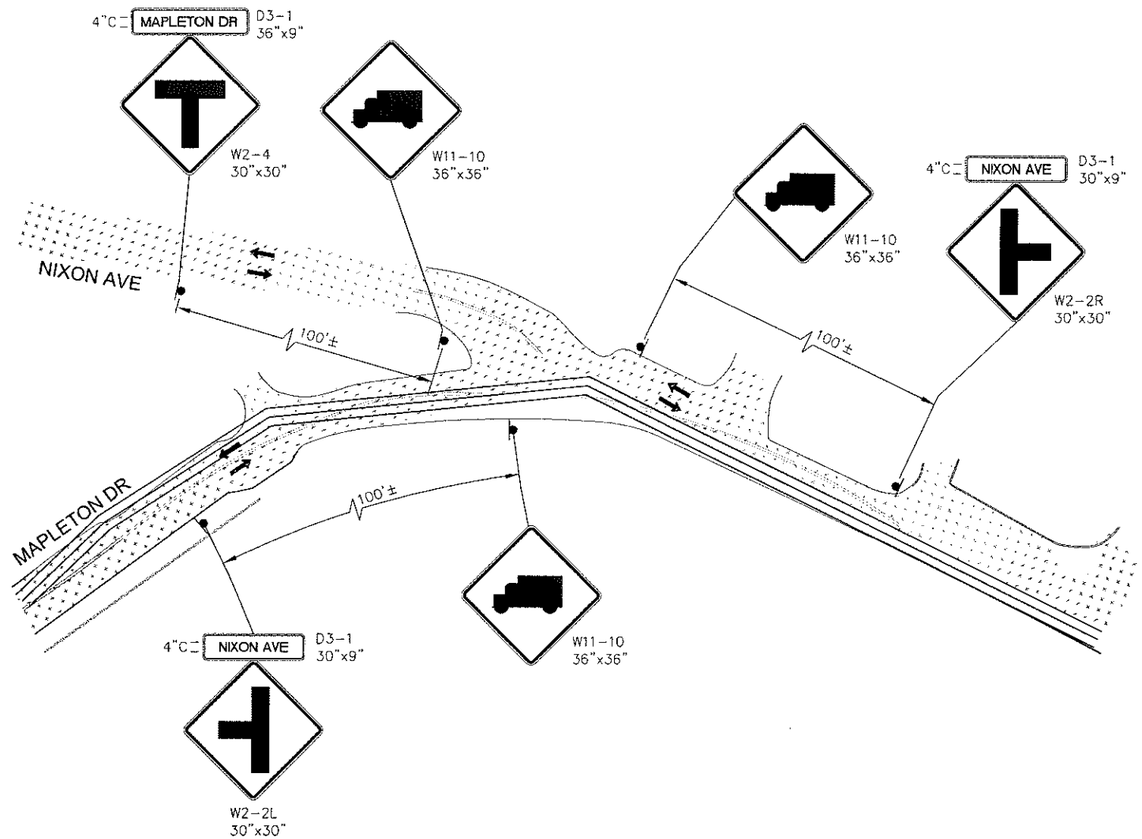

APPROVED FOR CONSTRUCTION BY
CITY OF WEST LINN
This approval is only for general conformance with the design concept and general compliance with applicable codes and requirements and shall not be construed as relieving the Design Engineer of full responsibility for accuracy and completeness of the drawings. This plan review approval does not prevent the City from requiring further code corrections in the field.
DATE: 5/14/14 BY: Khoi Q. Le

NOTES

1. ALL SIGNS SHALL BE TYPE "04" UNLESS OTHERWISE NOTED.

LEGEND

- UNDER TRAFFIC
- TEMPORARY SIGN ON TEMPORARY SUPPORT
- DIRECTION OF TRAFFIC
- WATER PIPE ALIGNMENT

N

GRAPHIC SCALE
30 0 30 60
1 inch = 30 ft.

DKS
720 SW Washington Street, Suite 500
Portland, Oregon 97205
(503) 243-3500
www.dksassociates.com

LINE IS 2 INCHES AT FULL SIZE (IF NOT 2" - SCALE ACCORDINGLY)

DESIGNED: MTL
DRAWN: DKS CAD
CHECKED: MTL
CHECKED: MTL
APPROVED: BKC

REVISIONS

REV.	DESCRIPTION	BY		APP.

THIS DRAWING WAS ORIGINALLY SEALED BY BRIAN K. COPELAND, A REGISTERED PROFESSIONAL ENGINEER IN THE STATE OF OREGON, NO. 18503PE

CONFORMED TO BID DOCUMENTS

Lake Oswego · Tigard Water Partnership
sharing water · connecting communities

SCHEDULE 3-MAPLETON
TRAFFIC CONTROL
NIXON AVE/MAPLETON DR INTERSECTION

DKS PROJECT NUMBER 11130-000
SCALE AS SHOWN
DRAWING/FIGURE NUMBER 3-T-03M

PLOT DATE: April 21, 2014 - 4:31PM USER: nh
FILE: X:\Projects\2011\11130-000 (Lake Oswego Water Pipeline Traffic Control Design)\ACAD\3-T-03M.dwg

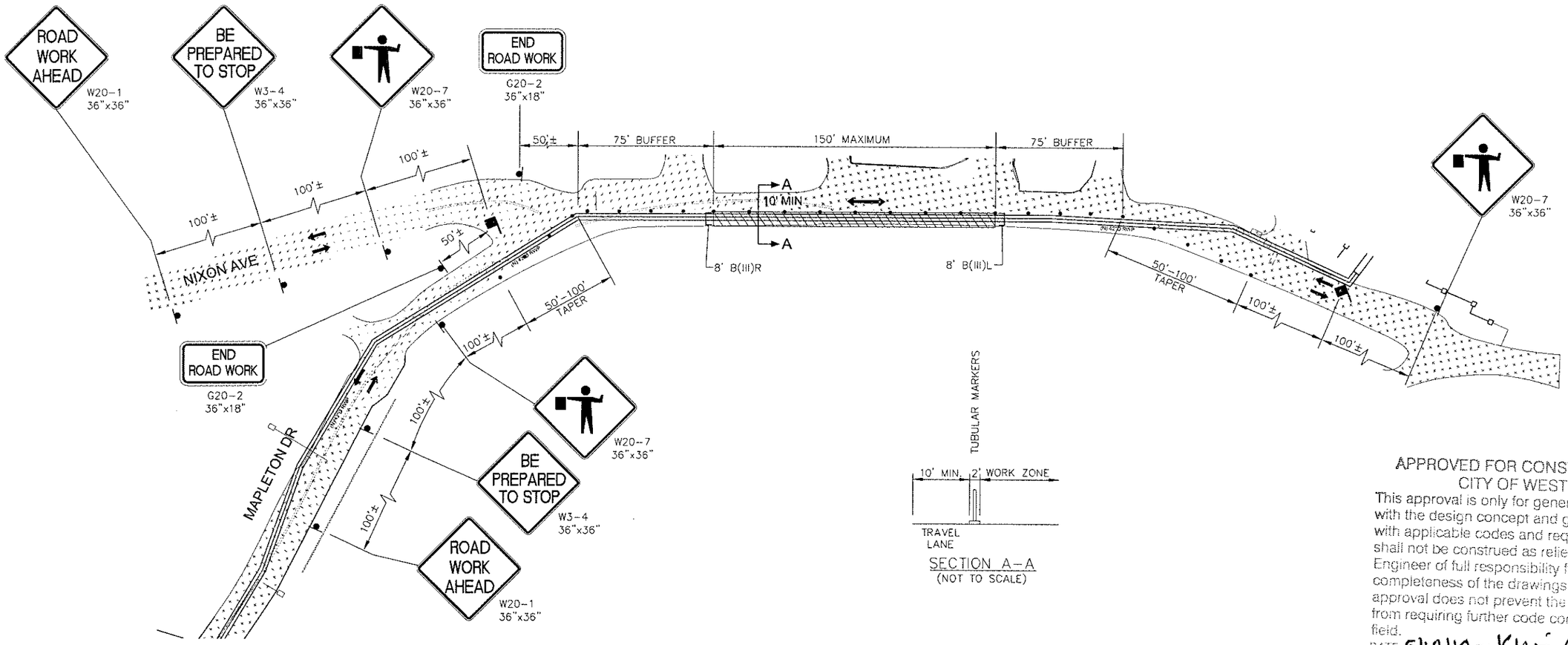

APPROVED FOR CONSTRUCTION BY
CITY OF WEST LINN
This approval is only for general conformance with the design concept and general compliance with applicable codes and requirements and shall not be construed as relieving the Design Engineer of full responsibility for accuracy and completeness of the drawings. This plan review approval does not prevent the City from requiring further code corrections in the field.
DATE: 5/14/19 BY: [illegible]

NOTES

1. SEE SPECIAL PROVISIONS FOR LANE CLOSURE RESTRICTIONS.
2. PROVIDE 12-FOOT WIDE EMERGENCY VEHICLE ACCESS AT ALL TIMES.
3. ALL SIGNS SHALL BE TYPE "04" UNLESS OTHERWISE NOTED.
4. SEE SPECIAL PROVISIONS AND OREGON STANDARD DRAWING TM844 FOR PEDESTRIAN ACCESS REQUIREMENTS DURING CONSTRUCTION.

LEGEND

- UNDER TRAFFIC
- UNDER CONSTRUCTION
- TEMPORARY SIGN ON TEMPORARY SUPPORT
- 28" TUBULAR MARKERS ON 20' MAX SPACING
- FLAGGER
- TYPE III BARRICADE L, R, LR
- DIRECTION OF TRAFFIC
- WATER PIPE ALIGNMENT

N

GRAPHIC SCALE
30 0 30 60
1 inch = 30 ft.

DKS
720 SW Washington Street, Suite 500
Portland, Oregon 97205
(503) 243-3500
www.dksassociates.com

LINE IS 2 INCHES AT FULL SIZE (IF NOT 2" - SCALE ACCORDINGLY)

DESIGNED: MTL
DRAWN: DKS CAD
CHECKED: MTL
CHECKED: MTL
APPROVED: BKC

REVISIONS

REV.	DESCRIPTION	BY		APP.

THIS DRAWING WAS ORIGINALLY SEALED BY BRIAN K. COPELAND, A REGISTERED PROFESSIONAL ENGINEER IN THE STATE OF OREGON, NO. 18503PE

CONFORMED TO BID DOCUMENTS

Lake Oswego · Tigard Water Partnership
sharing water · connecting communities

SCHEDULE 3-MAPLETON
TRAFFIC CONTROL
TYPICAL SINGLE LANE CLOSURE WITH FLAGGERS
MAPLETON DR SOUTH OF NIXON AVE

DKS PROJECT NUMBER 11130-000
SCALE AS SHOWN
DRAWING/FIGURE NUMBER 3-T-04M

PLOT DATE: April 21, 2014 - 4:31PM USER: rob
FILE: X:\Projects\2011\P11130-000 (Lake Oswego Water Pipeline, Traffic Control Design)\ACAD\3-T-04M.dwg

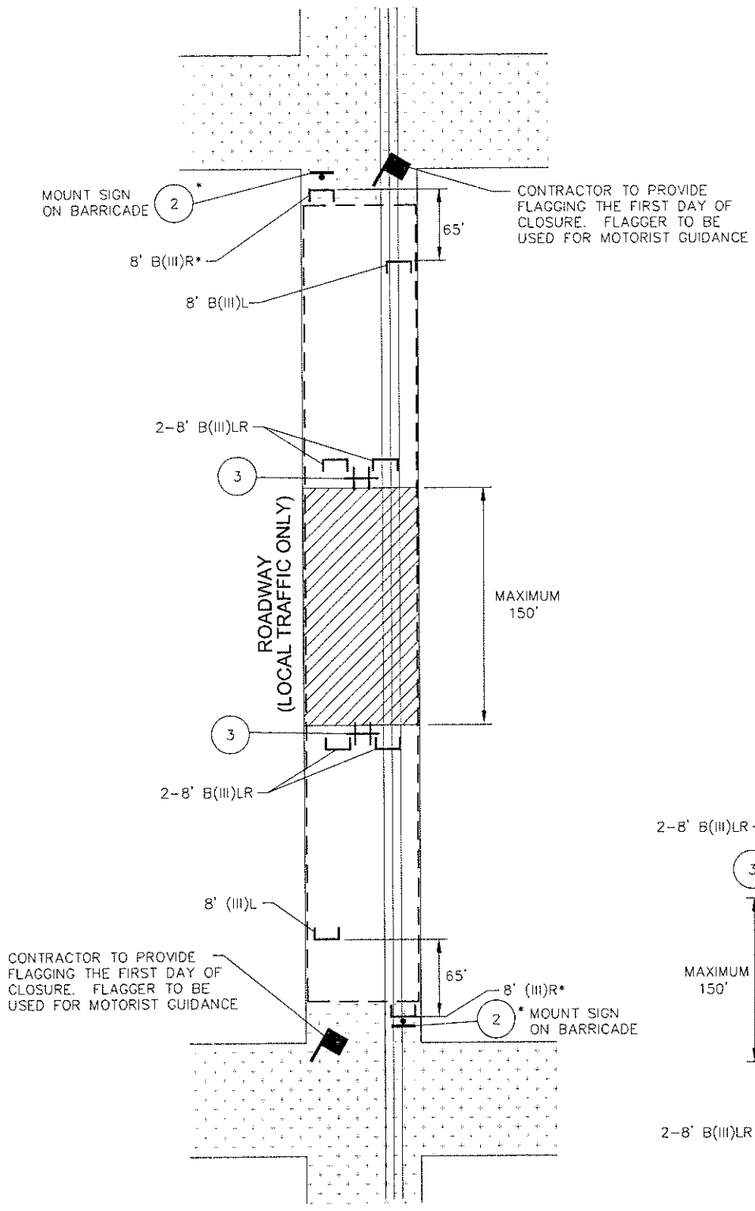

TYPICAL WORK ZONE DETAILS
(NTS)

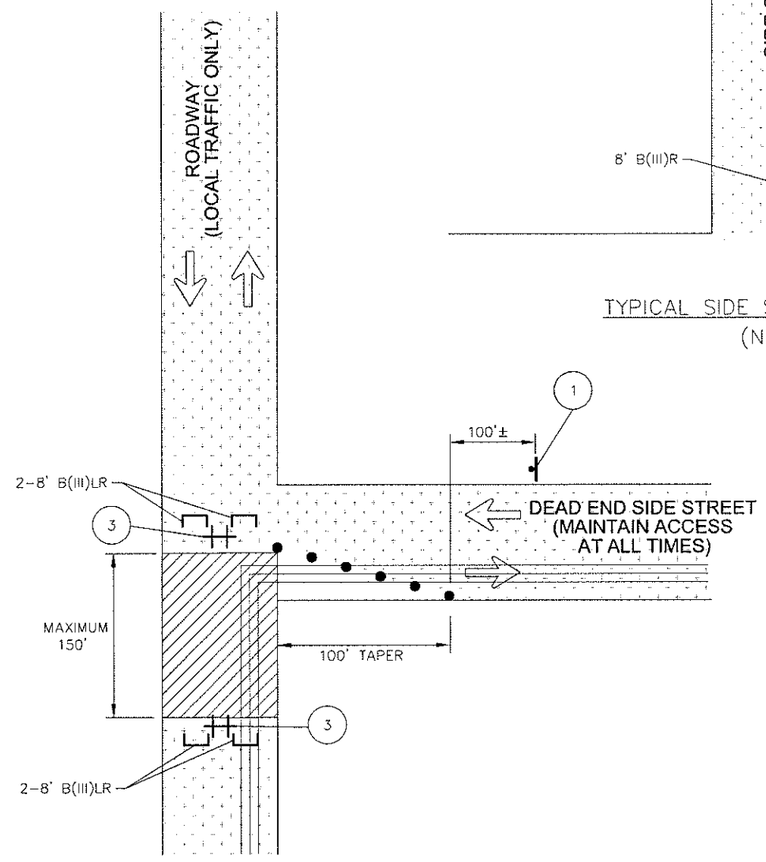

TYPICAL WORK ZONE WITH A DEAD END SIDE STREET
(NTS)

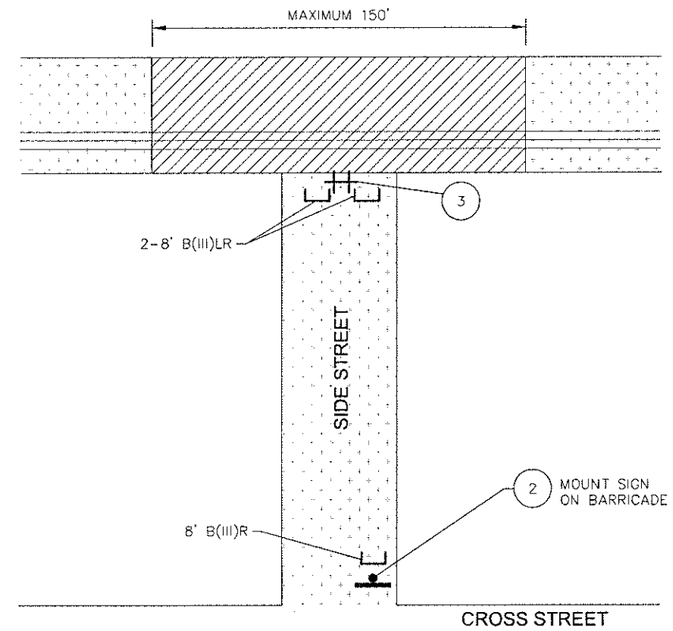

TYPICAL SIDE STREET CLOSURE
(NTS)

APPROVED FOR CONSTRUCTION BY
CITY OF WEST LINN
This approval is only for general conformance with the design concept and general compliance with applicable codes and requirements and shall not be construed as relieving the Design Engineer of full responsibility for accuracy and completeness of the drawings. This plan review approval does not prevent the City from requiring further code corrections in the field.
DATE: 5/14/14 BY: Khoi Q. Le

SIGN DETAILS (THIS SHEET ONLY)

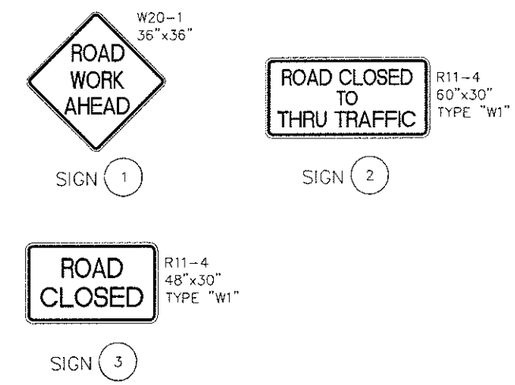

LEGEND

- UNDER TRAFFIC
- ACTIVE WORK ZONE
- WORK ZONE LIMITS
- 28" TUBULAR MARKERS AT 20' SPACING
- TEMPORARY SIGN ON TEMPORARY SUPPORT
- TEMPORARY SIGN SUPPORT (TSS)
- TYPE III BARRICADE L, R, LR
- FLAGGER
- WATER PIPE ALIGNMENT
- DIRECTION OF TRAFFIC

* SEE DETOUR PLANS FOR SIGN AND BARRICADE INSTALLATION DETAILS.

DKS
720 SW Washington Street, Suite 500
Portland, Oregon 97205
(503) 243-3500
www.dksassociates.com

LINE IS 2 INCHES AT FULL SIZE (IF NOT 2" - SCALE ACCORDINGLY)

DESIGNED: MTL
DRAWN: DKS CAD
CHECKED: MTL
CHECKED: MTL
APPROVED: BKC

REVISIONS

REV.	DESCRIPTION	BY		APP.

THIS DRAWING WAS ORIGINALLY SEALED BY BRIAN K. COPELAND, A REGISTERED PROFESSIONAL ENGINEER IN THE STATE OF OREGON, NO. 18503PE

CONFORMED TO BID DOCUMENTS

Lake Oswego · Tigard Water Partnership
sharing water · connecting communities

SCHEDULE 3-MAPLETON
TRAFFIC CONTROL

TYPICAL TRAFFIC CONTROL DETAILS
DETOURS

DKS PROJECT NUMBER 11130-000
SCALE AS SHOWN
DRAWING/FIGURE NUMBER 3-T-05M

PLOT DATE: April 21, 2014 - 4:23 PM USER: reh
FILE: X:\Projects\2011\11130-000 (Lake Oswego-Tigard Pipeline) Traffic Control Design\AC\AC3-1-T-05M.dwg