THIS DETAIL DRAWING SHALL NOT BE ALTERED OR CHANGED IN ANY MANNER EXCEPT BY THE CITY ENGINEER. IT IS THE RESPONSIBILITY OF THE USER TO ACQUIRE THE MOST CURRENT VERSION OF THE DETAIL.

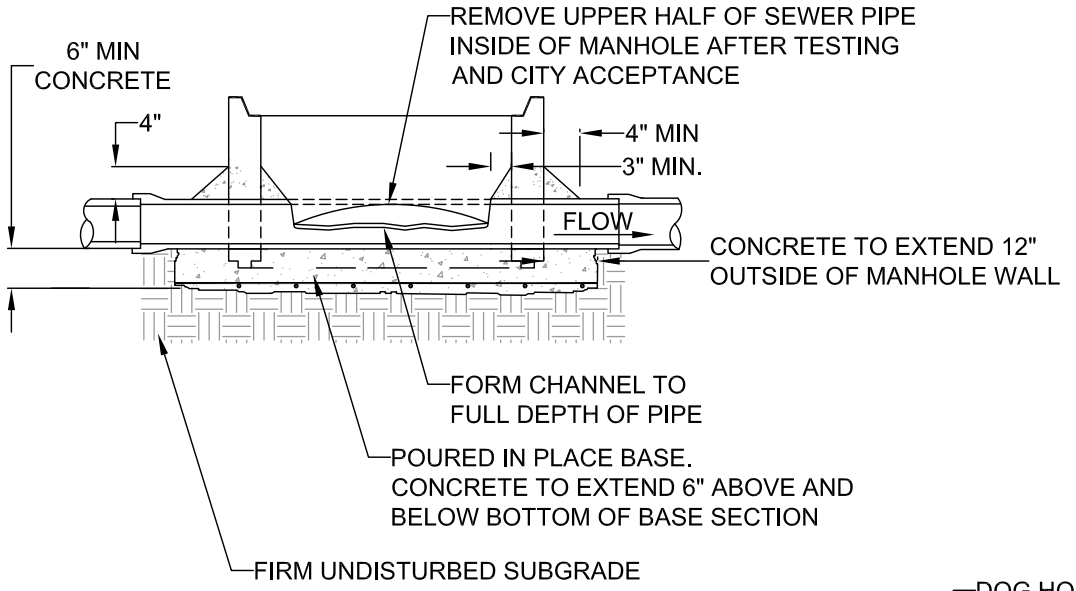

SECTION A-A

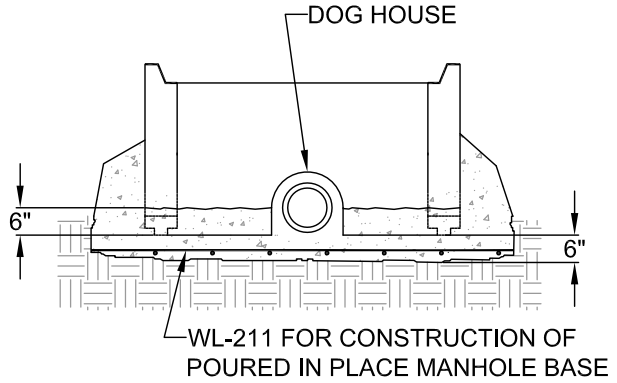

SECTION B-B

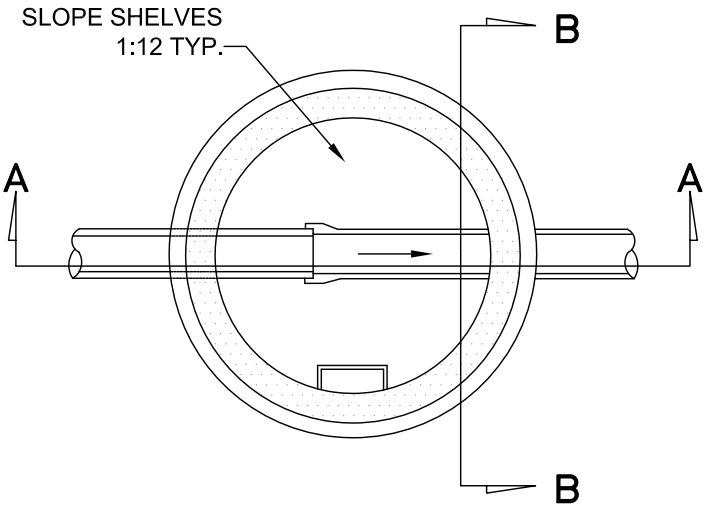

PLAN VIEW

NOTE:

1. BOTTOM RISER TO BE BEDDED IN THE CAST-IN-PLACE AS THE BASE TAKES IT'S INITIAL SET. SET FOR 24 HOUR MIN. OR UNTIL CONCRETE HAS CURED SUFFICIENTLY BEFORE ADDING ADDITIONAL RISERS.

2. 3" TO 6" CLEARANCE BETWEEN BOTTOM RISER SECTION AND TOP OF PIPE. RISER SECTION MUST BE CAST TO ACCOMODATE PIPE (DOG HOUSE) NO SAWING OR OR BREAKING OF RISER WILL BE ALLOWED.

3. REMOVE TOP OF PIPE ONLY AFTER TESTING AND ACCEPTED BY CITY.

NEW MANHOLE TO EXISTING PVC SEWER LINE CONNECTION

CITY OF West Linn

DATE:	2010
DRAWING NO.	WL-210A
FILE NO.	