THIS DETAIL DRAWING SHALL NOT BE ALTERED OR CHANGED IN ANY MANNER EXCEPT BY THE CITY ENGINEER. IT IS THE RESPONSIBILITY OF THE USER TO ACQUIRE THE MOST CURRENT VERSION OF THE DETAIL.

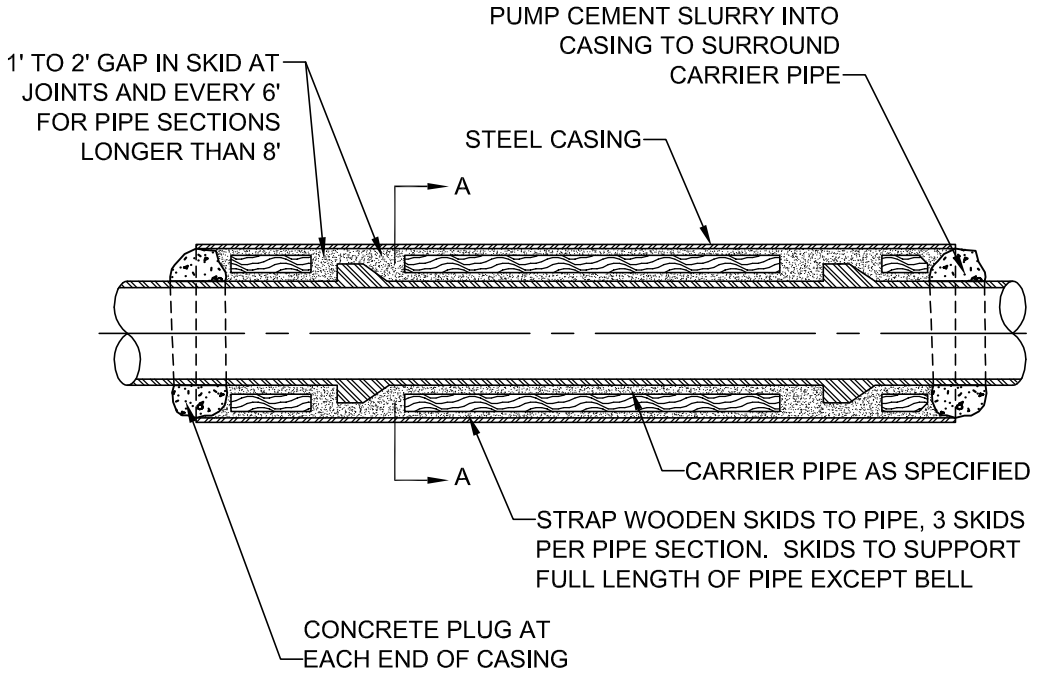

PLAN

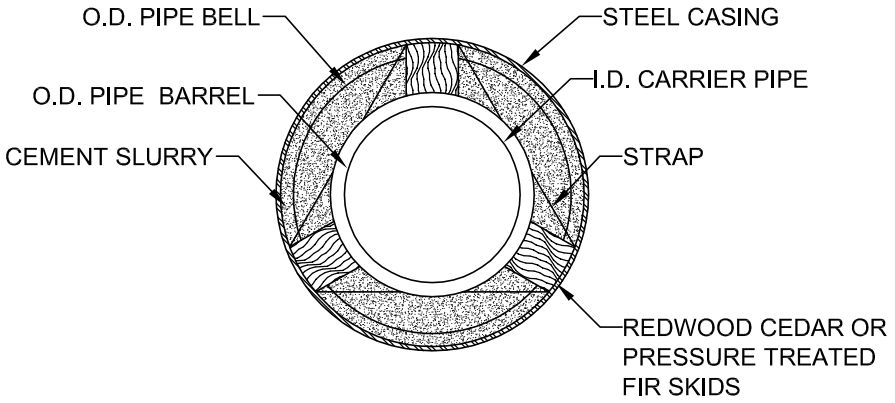

SECTION A-A

NOTE:

PLUG ENDS OF CASING WITH CONCRETE.

BORE CASING DETAIL

City of West Linn

DATE:	2010
DRAWING NO.	WL-204
FILE NO.	