THIS DETAIL DRAWING SHALL NOT BE ALTERED OR CHANGED IN ANY MANNER EXCEPT BY THE CITY ENGINEER. IT IS THE RESPONSIBILITY OF THE USER TO ACQUIRE THE MOST CURRENT VERSION OF THE DETAIL.

MATERIAL:

1. BROOKS METER BOX, BODY NO. 37, LID AND COVER NO.37-S.
2. MUELLER CORP. STOP NO. H-15008 OR FORD F1000-4Q CORP. STOP WITH OPERATING NUT AT 3 OR 9 O'CLOCK.
3. 1" SOFT TEMPER, TYPE "K" COPPER TUBING COMPLYING WITH ASTM B-88.
4. MUELLER ANGLE METER STOP NO. H-14258 (FORD NO. KV43-444W-Q).

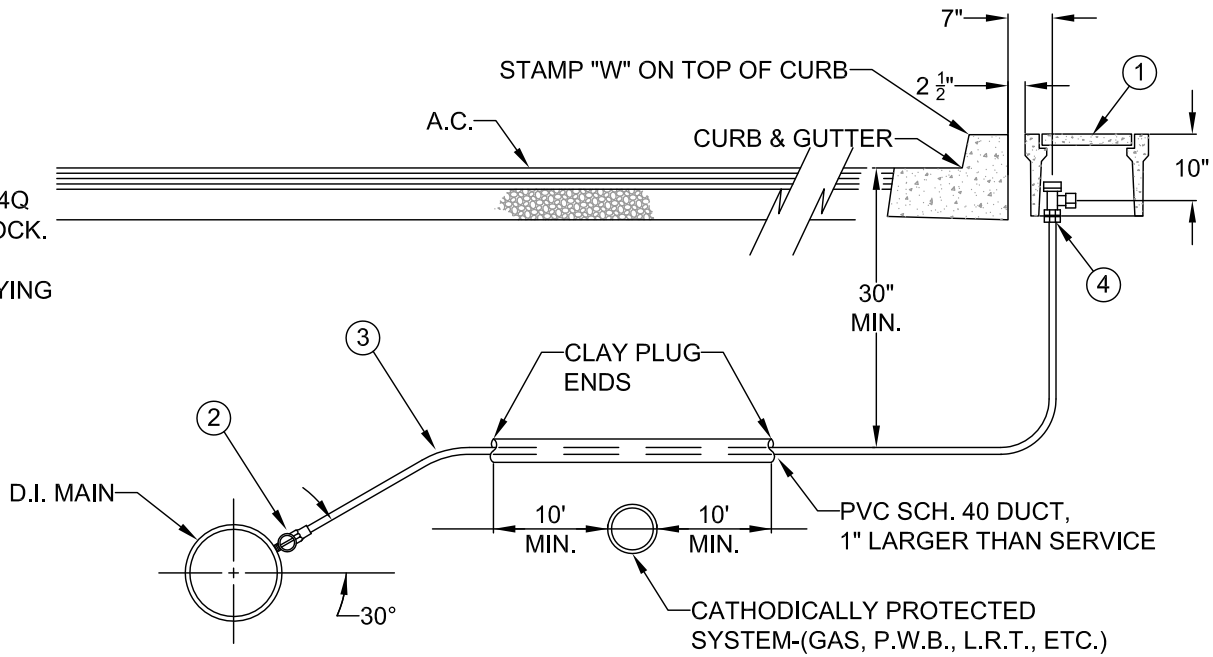

NOTE:

1. MACHINE DRILLED AND TAPPED ONLY. NO HAND DRILLING IS ALLOWED.
2. SUBSTITUTES FOR ANY MATERIALS SHOWN SHALL BE APPROVED BY THE CITY ENGINEER.
3. ALL PIPE AND STRUCTURE ZONE SHALL BE BACKFILLED USING 3/4" MINUS CRUSHED AGG. AND COMPACTED TO 95% MAX DENSITY AS DETERMINED BY AASHTO T-180.
4. WHEN AN ACTIVE CATHODIC PROTECTED SYSTEM IS ENCOUNTERED, SCH. 40 PVC SHALL BE INSTALLED AS SHOWN ABOVE WITH CLAY PLUG.
5. METER BOX SHALL BE CENTERED OVER THE COMPLETED METER ASSEMBLY.
6. TAPS INTO MAIN TO HAVE 18" SEPARATION ON CENTER MINIMUM.
7. ANGLE METER STOPS TO BE 18" FROM PROPERTY LINE AND NOT IN DRIVEWAY APPROACH.
8. METER BOXES IN CURB TIGHT SIDEWALK AND THOSE SUBJECT TO INCIDENTAL AUTO TRAFFIC MUST HAVE METAL LIDS AND BE TRAFFIC RATED.

CITY OF West Linn

STANDARD
1" WATER SERVICE

FILE NO.	DRAWING NO.	DATE:
	WL-402	2010