THIS DETAIL DRAWING SHALL NOT BE ALTERED OR CHANGED IN ANY MANNER EXCEPT BY THE CITY ENGINEER. IT IS THE RESPONSIBILITY OF THE USER TO ACQUIRE THE MOST CURRENT VERSION OF THE DETAIL.

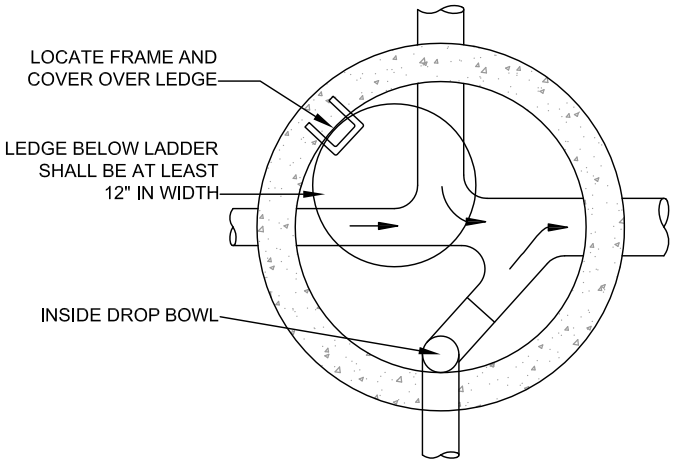

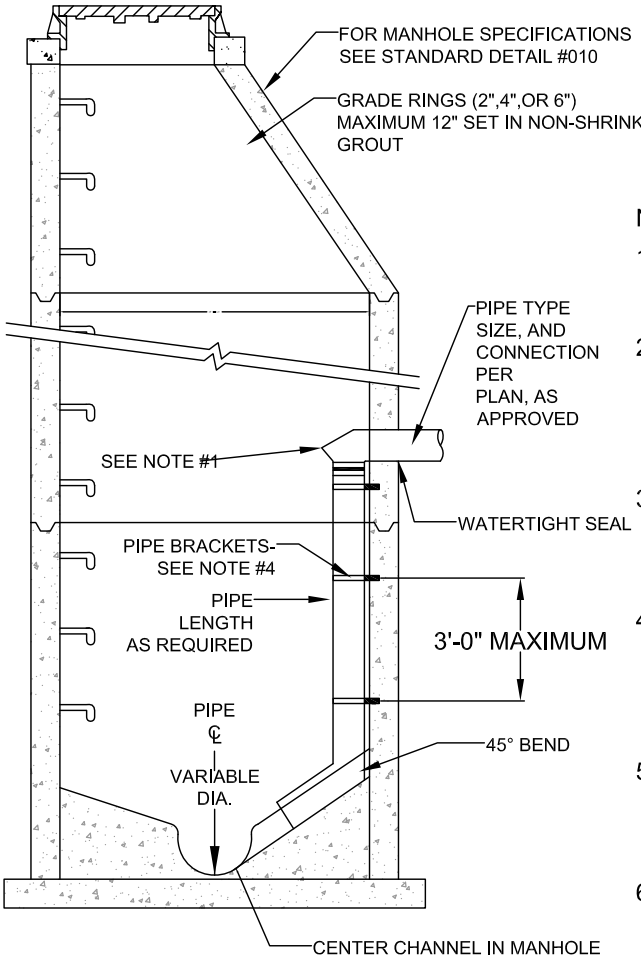

NOTE:

1. DROP BOWL AS MANUFACTURED BY RELINER-DURAN INC. OR APPROVED EQUAL.
2. DROP BOWL TO BE SIZED PER MANUFACTURER'S RECOMENDATIONS (INFORMATION AVAILABLE @ RELINER.COM) OR AS REQUIRED BY DISTRICT OR CITY.
3. PIPE AND FITTING FOR DROP ASSEMBLY SHALL BE: DUCTILE IRON, AWWA C-900 OR PVC ASTM 3034 SDR 35.
4. STAINLESS ADJUSTABLE PIPE BRACKETS AS MANUFACTURED BY RELINER-DURAN INC. OR APPROVED EQUAL. (INFORMATION AVAILABLE @ RELINER.COM).
5. NO MORE THAN ONE DROP BOWL PER MANHOLE WITHOUT WRITTEN APPROVAL BY DISTRICT OR CITY.
6. WRITTEN APPROVAL BY DISTRICT OR CITY IS REQUIRED FOR DROP BOWL INSTALATION ON PIPELINES WITH A SLOPE OF 5% OR GREATER.

INSIDE DROP MANHOLE CONNECTION FOR SANITARY SEWER PRIVATE SERVICE

CITY OF West Linn

DATE:	2010
DRAWING NO.	WL-302
FILE NO.	