THIS DETAIL DRAWING SHALL NOT BE ALTERED OR CHANGED IN ANY MANNER EXCEPT BY THE CITY ENGINEER. IT IS THE RESPONSIBILITY OF THE USER TO ACQUIRE THE MOST CURRENT VERSION OF THE DETAIL.

MATERIAL:

1. CAST IRON VALVE BOX AND LID (SEE STANDARD DETAIL WL-411).
2. PIPE O.D. x 2" TEE OR ROCKWELL NO. 317 SERVICE SADDLE WITH STRAPS.
3. 2" x 6" BRASS I.P.T. NIPPLE.
   6" LENGTH MAY BE REDUCED IF NEEDED TO ACCOMMODATE CERTAIN TAPPING MACHINES.
4. 2" I.P.T. x I.P.T. GATE VALVE WITH RESILIENT WEDGE.
5. 2" x 3" I.P.T. x MUELLER 110 COMP. COUPLING.
6. 2" ASTM B-88 TYPE "K" COPPER TUBING. SOFT TEMPER WITH FLARE FITTING WILL NOT BE APPROVED.
7. 2" 90° ELL, MUELLER 110 CTS COMPRESSION.
8. 1 1/2" - 2" ANGLE METER STOP, MUELLER NO. 14276 OR 14277, FORD NO. FV23-777W.
9. BROOKS METER BOX, BODY NO. 65 (2"), LID & COVER NO. 65-S (2").

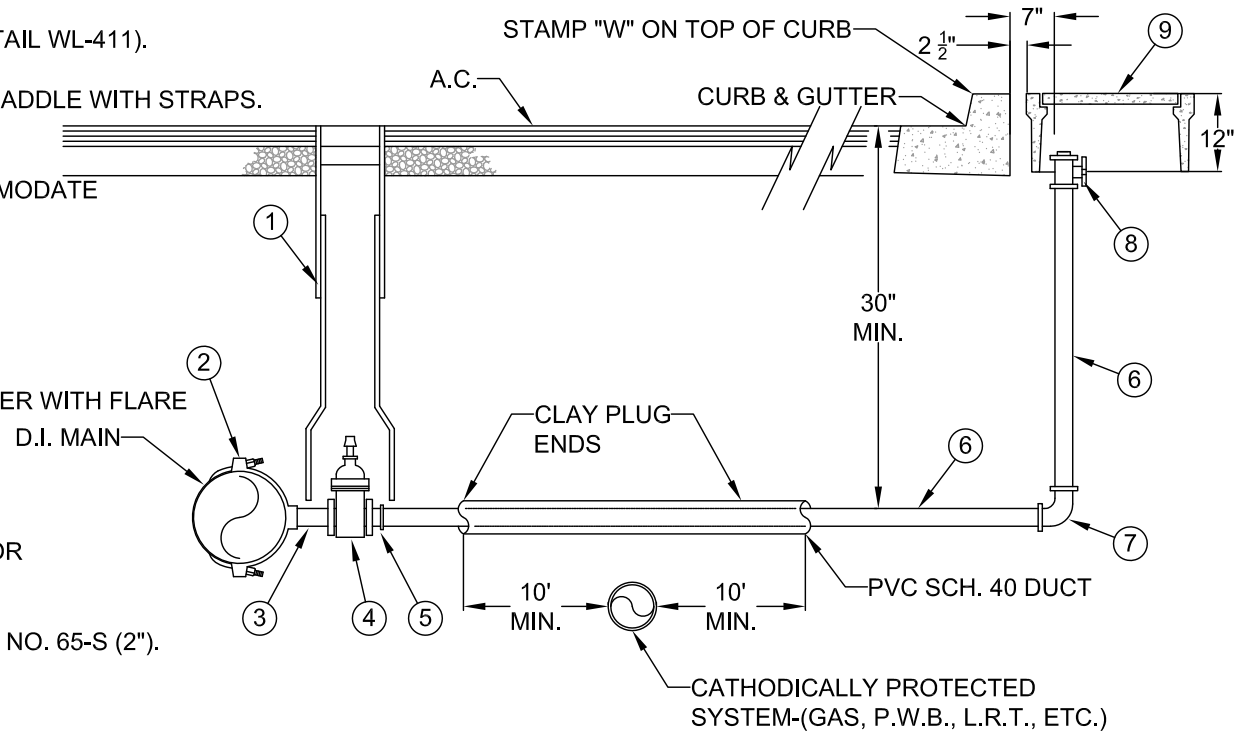

NOTE:

1. MACHINE DRILLED AND TAPPED ONLY. NO HAND DRILLING IS ALLOWED.
2. SUBSTITUTES FOR ANY MATERIALS SHOWN SHALL BE APPROVED BY THE CITY ENGINEER.
3. ALL PIPE AND STRUCTURE ZONE SHALL BE BACKFILLED USING 3/4" MINUS CRUSHED AGG. AND COMPACTED TO 95% MAX DENSITY AS DETERMINED BY AASHTO T-180.
4. WHEN AN ACTIVE CATHODIC PROTECTED SYSTEM IS ENCOUNTERED, SCH. 40 PVC SHALL BE INSTALLED AS SHOWN ABOVE WITH CLAY PLUG.
5. METER BOX SHALL BE CENTERED OVER THE COMPLETED METER AND FITTING ASSEMBLY.
6. CUSTOMER SHALL INSTALL AN APPROVED BACKFLOW PREVENTION DEVICE.
7. METER BOXES IN CURB TIGHT SIDEWALK AND THOSE SUBJECT TO INCIDENTAL AUTO TRAFFIC MUST HAVE METAL LIDS AND BE TRAFFIC RATED.

STANDARD 1 1/2" - 2" WATER SERVICE

CITY OF West Linn

DATE: 2010

DRAWING NO. WL-403

FILE NO.