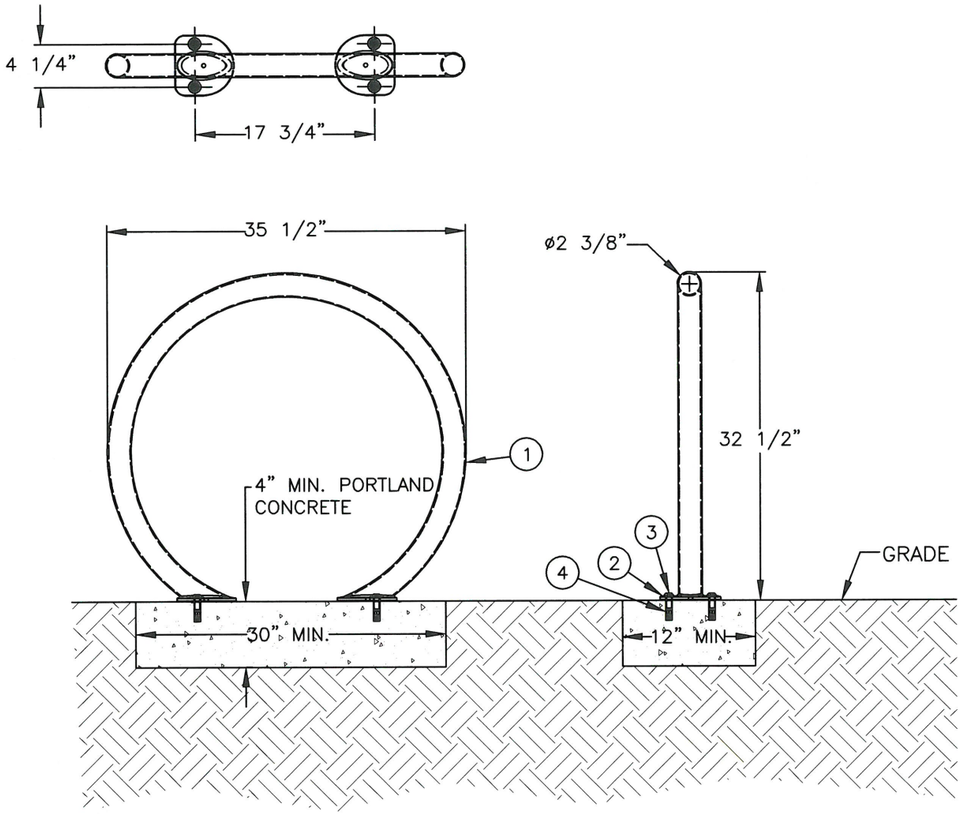

PLAN / PROFILE VIEW

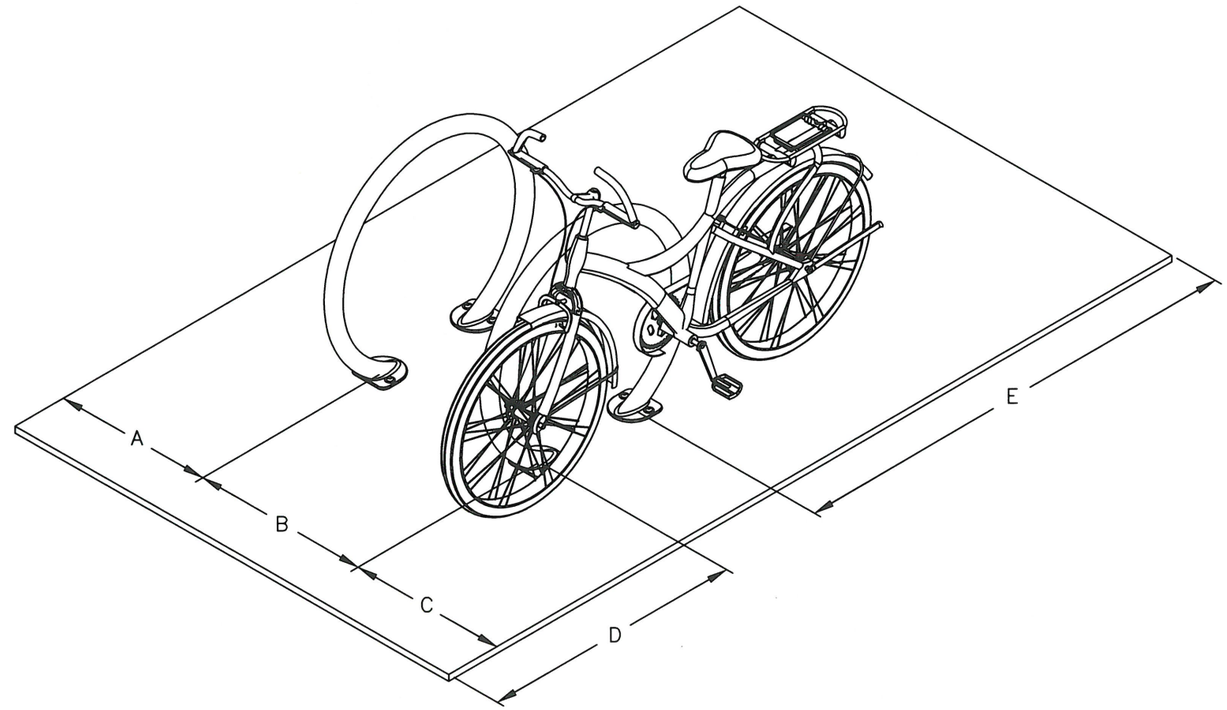

ISOMETRIC VIEW*

MATERIALS:

1. BLACK POWDER COATED STEEL BIKE RACK
2. STAINLESS STEEL WASHER 1/2" OD 1 1/4" THICK .05
3. FLUSH/LOCK TIGHT STAINLESS STEEL HEXAGON SOCKET CAP BOLT 1/2" X 1 1/4"
4. STEEL PLATED 1/2" DROP-IN CONCRETE INSERT IN DRILLED 5/8" X 2" DEEP HOLE

	SPACING DIMENSIONS
A	MIN. 24" FROM WALL OR OBJECT (MIN. 18" TO FACE OF CURB)
B	STANDARD 36" (MIN. 30") SPACING
C	MIN. 24" FROM WALL OR OBJECT (MIN. 12" TO PEDESTRIAN ZONE)
D	MIN. 30" FROM WALL OR OBJECT (MIN. 24" TO FACE OF CURB. DOES NOT ALLOW BIKE ENTRY)
E	MIN. 66" FROM WALL OR OBJECT (ALLOWS BIKE ENTRY)

* STANDARD SPACING SHOWN IN ISOMETRIC VIEW. ALLOW 6 FEET STANDARD FOR BIKE LENGTH. BIKE RACKS MAY BE PLACED PARALLEL, ANGLED, OR PERPENDICULAR TO SIDEWALK/ROAD DEPENDING UPON LOCATION. CONSULT WITH CITY PUBLIC WORKS DEPARTMENT ENGINEERING DIVISION PRIOR TO INSTALLATION AND FOR ANY DEVIATION FROM STANDARD SPACING.

Standard Drawing No.
WL-BI010

Effective Date:
02/22/19

Title:
BICYCLE STORAGE
STANDARD RACK

Approved
City Engineer

CITY OF West Linn
PUBLIC WORKS DEPARTMENT - STANDARD DRAWINGS
22500 Salamo Road, West Linn OR 97068
Phone:503-722-5500 www.westlinnoregon.gov

NOTE:
All material and workmanship shall be in accordance with the City of West Linn Standard Construction Specifications.

The selection and use of this Standard Drawing, while designed in accordance with generally accepted engineering principles and practices, is the sole responsibility of the user and should not be used without consulting a Registered Professional Engineer.

File
WL-BI010.dwg