City of West Linn

Memorandum

Date: March 28, 2014

To: West Linn City Council

From: Chris Kerr, Community Development Director;

Zach Pelz, Associate Planner

Subject: CDC-13-01 – Economic Development Regulatory Streamlining Project (CDC 13-01)

At the March 31, 2014, Council work session, Staff will review each of the proposed amendments for this project and explain the areas of agreement and disagreement between the Planning Commission's recommendation and Staff's. To help facilitate this discussion and to better understand the issues, attached is a summary table of the amendments being proposed (which includes hyperlinks to the code document). This table is organized into 25 individual CDC amendments to be discussed and is organized to provide:

- the purpose for the amendment ("*Proposed Amendment*");
- a description of Staff's and the Planning Commission's stance on a given issue ("*General description/Comments*");
- a confirmation of whether or not the proposal was approved by the City Council for consideration ("*Approved for Consideration by CC*"); and,
- the body initiating the amendment ("*Initiated by*").

Attachment "A" supplements this memo and provides the exact proposed text change as well as additional justification and support for the Planning Commission's and Staff's position regarding each proposed item. It follows the sequence of the summary table and includes: a description of each issue as well as a summary of the Planning Commission and staff and EDC recommendation regarding each issue. Text changes to the CDC are shown in standard strikethrough (proposed deletion) and underline (proposed addition) format.

Background

Adoption of these amendments is a stated City Council priority for this year. This project was initiated last year by the Council as part of their annual goals. In April of last year, working with the Planning Commission, the Council established the following purpose for this project:

> *In support of the City Council's goal of promoting economic development and business activity in the City, this project will review and modify our existing codes and processes to;*
>
> *(1) remove ineffectual and redundant regulatory and procedural practices that act as barriers to economic development and businesses; and*
>
> *(2) incorporate best practices to streamline and provide incentives for future economic development activity in the City.*

The Issue number at left in Table 1, is linked to the discussion in Attachment A. If you are reviewing this document from your computer or electronic device, you can ***navigate between Table 1 and the corresponding arguments simply by clicking on the link at the left****. Each issue concludes with a link that will return you to the next item in the table.*

Contents

Table 1: Summary of proposed CDC and Municipal Code amendments 3

Attachment A

Amendments to the Comprehensive plan 12

Land use appeals 19

Variances and Special Waivers 27

Procedural amendments 35

Greater Flexibility 48

Remove Ineffectual and Redundant Language 76

Table 1 Summary of proposed CDC and Municipal Code amendments and arguments in support and/or opposition

No.[1]	Proposed amendment	General description/comments	Approved for consideration by CC	Initiated by
Comprehensive Plan				
1	Remove 2003 City Council Goals from the Comprehensive Plan.	Annual City Council Goals should not be construed as decision making criteria in the context of the City's Comprehensive Plan, they were not created for that purpose. Their inclusion provides opportunities for legal challenges due to potential for inconsistent interpretations of the CDC.	Yes	Staff
		Planning Commission disagrees and has rewritten and proposed new "Citizen Vision Goals". The Planning Commission believes there are elements in the 2003 Goals, such as the City's opposition to growth in the Stafford Basin, that are not codified elsewhere and that these goals should be retained to ensure these desires are maintained throughout future land-use related decisions.		
2	Modify the definition of "conditional use" to match the CDC definition.	The CDC and Comprehensive Plan have different definitions for "conditional use". This change makes those definitions consistent and avoids confusion and legal challenge.	Yes	Staff
3	Modify portions of Goal 9 of the Comp Plan to emphasize the City's commitment to economic development.	These changes emphasize the City's commitment to promoting economic development.	Yes	Staff
		The Planning Commission generally agrees, but has minor disagreements on some of the "Background" language.		

[1] If you are reviewing this as an electronic document (.doc or .pdf) you can click on the numbers below to be taken to a more in-depth discussion of the issue in Attachment A.

PC recommendation where Staff and PC not in agreement

Item not approved by Council for consideration at July 10 meeting

No.[1]	Proposed amendment	General description/comments	Approved for consideration by CC	Initiated by
Land Use Appeals				
4	Amend quasi-judicial appeals to be heard as "on the record" rather than "de novo."	Requires applicants to submit their "best" application during the initial hearing. Reduces the cost associated with appeal hearings and is expected to provide for better quasi-judicial decisions.	Yes	Staff
		The Planning Commission disagrees with this recommendation and suggests the existing de novo process be preserved in its entirety. The Planning Commission believes opportunities for input and testimony from residents should never be reduced.		
5	Amend appeal language to no longer exclude neighborhood associations from paying for appeals	Aside from being inequitable, Staff believes that no-charge appeals encourage frivolous appeals and unnecessarily drive up costs for the City and the applicant.	Yes	Staff
		Planning Commission does not support changes to any of the existing neighborhood association procedures or practices, including their free appeals.		
6	Modify Chapter 99 (Procedures for Quasi-judicial Decision-making) to require decisions by a lower approval body to be called up by at least a majority of Planning Commission or City Council members.	Currently, a decision by a lower approval body may be called up, outside of a hearing, by two members of the Planning Commission or City Council. Staff believes that the City Charter and Oregon Public Meetings Law require that the decision to call up a lower decision must be made by a majority of members in a public meeting.	Yes	Staff
		The Planning Commission disagrees and proposes to retain the existing language, allowing two members of the Planning Commission or City Council to call up a decision.		

PC recommendation where Staff and PC not in agreement

Item not approved by Council for consideration at July 10 meeting

No.[1]	Proposed amendment	General description/comments	Approved for consideration by CC	Initiated by
Variances and Special Waivers				
7	Revise variance criteria regarding topography, takings and conditional uses.	Staff suggests rewriting the variance criteria for clarity and to be more legally defensible. One of the changes includes removing the requirement to apply Comprehensive plan policies to variance applications. The Planning Commission agrees with most of the changes to this section, but wants to keep criteria relating to the policies in the Comprehensive Plan.	Yes	Staff
8	Revise variance criteria to allow dimensional adjustments and minor variances to be approved under less rigorous criteria.	Generally codifies historical interpretation of CDC in these situations and reduces legal liability. This should make it easier for minor deviations from the code to be utilized by applicants, while still requiring approval criteria to be met.	Yes	Staff
9	Create a new type of variance classification (Special Waiver) for projects that would like to propose a superior design/project that does not meet the letter of the regulations.	This approach would permit more flexibility and creativity in the design and development of commercial sites while ensuring consistency with the purpose and intent of the City's commercial base zones. It would be voluntary but will require greater subjectivity of review. The PC made the initial suggestion for this change prior to the Council meeting in July	Yes	PC
Procedural Amendments				

PC recommendation where Staff and PC not in agreement

Item not approved by Council for consideration at July 10 meeting

No.[1]	Proposed amendment	General description/comments	Approved for consideration by CC	Initiated by
10	Reduce the number of paper copies submitted by the applicant from three to one.	Electronic copies save paper and printing costs and are often requested in-lieu of paper copies.	Yes	Staff
11	Exempt certain minor activities (sidewalks, transit shelters, bike racks in the public right-of-way, fences on non-residential properties from Class I Design Review.	Unnecessary burden for minor public projects. Acts as a disincentive for desirable amenities that benefit the community.	Yes	Staff
12	Permit amendments to "approved conditional uses" to be reviewed similarly to amendments to "uses permitted outright."	Currently, any proposed modification to a previously approved conditional use is reviewed as a new conditional use and subject to the same standards and submittal requirements as new conditional uses. This amendment would allow minor CUP modifications to be addressed the same way as amendments to all other approved development in the City.	Yes	Staff
13	Eliminate the permit process for A-frame signs.	Proposal would add language specifying the size, location and appearance of A-frame signs, but a permit would not be required.	Yes	Staff

PC recommendation where Staff and PC not in agreement

Item not approved by Council for consideration at July 10 meeting

No.[1]	Proposed amendment	General description/comments	Approved for consideration by CC	Initiated by
14	Change "hotels" from a Conditional Use to a Use Permitted Outright in the General Commercial and OBC Zones.	This would make approval process for a desired use (hotel) easier to navigate and predict. The impacts associated with hotels are similar to impacts of other uses permitted outright in the GC and OBC zones.	Yes	Staff
Greater Flexibility				
15	Eliminate lot dimensional requirements except for lot frontage and width.	The current provisions have proven ineffective. This change will provide greater flexibility in designing lots and, will maintain existing lot size and separation between adjacent residences.	Yes	Staff
		The Planning Commission recommends making some modifications, but would maintain the dimensional requirements on smaller lots. They also recommend increasing some commercial setbacks.		
16	Allow adjacent on-street parking to count toward the required total minimum parking. Also, revise parking standards for consistency with the Regional Transportation Plan.	Allows more land to be used for productive, commercial purposes, and reduces development costs; which encourages redevelopment.	Yes	Staff
		Planning Commission proposes to not allow on street parking to count toward the minimum requirement as it will reduce the total number of available parking spaces.		

PC recommendation where Staff and PC not in agreement

Item not approved by Council for consideration at July 10 meeting

No.[1]	Proposed amendment	General description/comments	Approved for consideration by CC	Initiated by
17	Permit residents to own and maintain egg-laying chickens at their place of residence.	Staff is proposing regulations that would permit household chickens in the City, subject to new nuisance standards proposed in the Municipal Code. This would be consistent with the Planning Department's policy and practice over the past five years. The Planning Commission disagrees with this proposal.	Yes	Staff
18	Permit outdoor seating for commercial uses to extend beyond the storefront with permission from the adjacent property owner.	Would permit restaurants to have more outdoor seating.	Yes	Staff
Remove Ineffectual and Redundant Language				
19	Repeal Chapters 31 (Erosion Control) and 33 (Stormwater Quality and Detention) in their entirety.	These chapters are redundant with construction requirements that are reviewed by the Public Works and Building Departments. Additionally, many of these details are not known at the time of land use approval. These standards are more appropriately reviewed during the construction phase.	Yes	Staff
20	Amend Chapter 60: conditional Use criteria in order to reduce ambiguity	Staff initially proposed modifications to the CUP approval criteria to remove ambiguity and provide more objective standards. However, in September, after several meetings with the PC, Staff recommended removing them from this round of amendments to allow for more detailed consideration. The PC recommends making changes to the CUP criteria as part of this package. They are similar to Staff's initial recommendation, but include criteria related to Comprehensive Plan policies and the need to meet the "overall needs" of the community.	Yes	Staff/PC

PC recommendation where Staff and PC not in agreement

Item not approved by Council for consideration at July 10 meeting

No.[1]	Proposed amendment	General description/comments	Approved for consideration by CC	Initiated by
21	Amend Chapter 28 (Willamette and Tualatin River Protection) to clarify that acquisition and easements will be negotiated with willing sellers in accordance with City policy regarding property acquisition.	The Planning Commission believes this addition gives property owners more comfort in understanding how property easements and dedications will be acquired. There is similar language in the recently approved Trails Master Plan	No	PC
		Staff has not had time to make a recommendation on this item yet. The term 'willing seller' seems ambiguous. The City's policies for property (easement) acquisition are already contained in the Municipal Code.		
22	Amend Chapter 56 (Parks Design Review) to require all paths and trails greater than 200-feet to be reviewed under the Class II Design Review Criteria and decided by the Planning Commission.	Staff has not had time to develop a position on this item yet and would like to better understand the additional impacts that may be associated with the broader review criteria and public hearing requirements for these public paths/trails. This could have a significant impact on the City's park system; input from the City's Parks and Recreation Advisory Board may be of assistance.	No	PC
		The Planning Commission recommends making paths/trails subject to a public hearing by the Planning Commission with more detailed application requirements and a public hearing. Currently, all trails over 200-feet in length are reviewed and decided by the Planning Director – trails less than 200-feet in length do not require Design Review.		

PC recommendation where Staff and PC not in agreement

Item not approved by Council for consideration at July 10 meeting

No.[1]	Proposed amendment	General description/comments	Approved for consideration by CC	Initiated by
23	Change Section 55.100(B)(2)(b) to require at least 20 percent of the non-type I and II lands or 20 percent of the significant trees, whichever is greater, to be set aside for tree protection.	Staff initially proposed modifications to this section to require the protection of significant trees, rather than applying tree easements over the ground. During the Planning Commission hearings, staff recommended postponing the item from the current amendment package in order to review the issue more carefully. The PC wants to modify current ambiguous language that requires applicants to set aside up to 20 percent of non-type I and II lands for tree protection. The City has interpreted the existing code language differently over the years.	Yes	Staff/PC
24	Amend Section 99.040 (Quasi-judicial decision-making) to require that staff reports be made available to the public 15 days in advance of the scheduled public hearing.	Staff disagrees with this proposal and believes that decreasing the amount of time that has staff has to review an application and prepare their report and recommendation would jeopardize the quality of staff's analysis of the proposal. (Note: State law requires 7 days.) Currently Staff reports are provided 10 days before the hearing. The PC wants the public to have more time to review staff reports.	No	PC
25	Revise Section 99.030 to not obligate the City to cite applicable federal and state laws and comprehensive plan policies during the pre-application meeting.	Staff is concerned that Comprehensive plan policies are written too broadly and subjectively to consistently apply as decision-making criteria. In practice, the City has never fully provided this information. Planning Commission agrees that it is unnecessary to cite applicable state and federal laws but wants to require that Staff cite all comprehensive plan policies at the pre-application meeting.	Yes	Staff

PC recommendation where Staff and PC not in agreement

Item not approved by Council for consideration at July 10 meeting

Attachment A: Staff response and justification for proposed CDC and Municipal Code Amendments

---

Issue No. 1: Remove 2003 City Council Goals from the Comprehensive Plan. Staff recommended that the 2003 City Council Goals be deleted as they are inappropriate decision- or policy-making criteria and should be removed from the Comprehensive Plan to avoid confusion and legal liability.

Planning Commission's position: The Planning Commission believes that the 2003 City Council Goals are values that remain relevant today and are necessary to ensure that future development is consistent with these values. However, they recommend that the 2003 City Council Goals be renamed as the "Citizen Vision Goals" and should include minor updates (included below) to update them for the City's current environment. The full-text of the Planning Commission's proposal follows:

~~Council~~ Citizen Vision Goals
West Linn Comprehensive Plan
Adopted ~~Feb. 5, 2003~~ September 2013

1. *Maintain and protect West Linn's quality of life and livability.*
2. *~~Actively s~~Support ~~and encourage~~ West Linn's neighborhood associations and promote citizen involvement in civic life. ~~Establish and maintain~~Foster land use planning and policies that give neighborhoods ~~real~~ control over their communities' future.*
3. *Maintain and strengthen trust and credibility in City government.*
4. *Preserve and protect West Linn's water resources.*
5. *Maintain a budgetary process that is fiscally prudent and provides quality and cost-effective City services to the citizens of West Linn. Utilize West Linn small businesses when possible to perform contracted City services.*
6. *Promote land use policies, both locally and regionally, that are based on the concepts of sustainability, carrying capacity, and environmental quality.*
7. *~~Foster and active partnership with the School District that promotes a safe and positive learning environment for West Linn students.~~ Foster mixed use development that integrates small business and residential dwellings in appropriate corridor areas to encourage economic development and revitalize neighborhood/community connections.*
8. *Maintain openness and accessibility for the public to members of the City Council.*
9. *Oppose urbanization of the Stafford Triangle and pursue policies ~~that would permanently~~ to retain that area as a rural buffer between West Linn and neighboring communities.*
10. *Pursue City policies predicated on the assumption that growth should pay for 100% of the cost it creates.*
11. *Support development of remaining commercial lands through a master planning process that balances neighborhood/community desires with economic development appropriate for the geographic location and its attributes. Encourage partnering with Oregon City for development of the Arch Bridge/I-205 corridor region.*

~~11. Assert through both planning and policy that compatibility with existing development should be a primary goal in West Linn's land use process.~~

Staff's position: Staff recommends that the 2003 City Council Goals, on page 1 of the West Linn Comprehensive Plan, be removed from the Comprehensive Plan in their entirety.

Per State statute, the Comprehensive Plan is organized around the 19 Statewide Planning Goals, and includes local policies and recommended action measures that establish direction for local officials about how to develop regulations that implement policies related to the 19 Statewide Planning Goals. The 2003 City Council Goals, included on page 1 of the West Linn Comprehensive Plan, do not follow the statutory organizational structure nor necessary context (response to a given land use goal, policies and action measures) within which to develop future implementing legislation.

Therefore, staff recommends the 2003 City Council goals be removed from the Comprehensive Plan to avoid confusion about the implementation of legitimate components of the Comprehensive Plan and to reduce the City's legal liability with inappropriate interpretations of the Plan. Furthermore, the West Linn City Council updates its goals on an annual basis and therefore, the 2003 City Council goals are no longer relevant.

BACK TO TOP

Issue No. 2: Modify the definition of "conditional use" in the Comprehensive Plan to match the CDC definition. The Comprehensive Plan and CDC have different definitions for "conditional use". This is problematic for obvious reasons, and the issue came to light most recently with the LOT applications. The recommendation is to clarify this issue in two ways. First, under the definition section of the Plan, Staff is adding clarifying language stating that the definition of all terms used in the Plan are only applicable within the Plan itself, and not to other documents in the City. Also, Staff is modifying the definition of "conditional use" to accurately define the term. The current definition in the Plan lists (inaccurately) criteria for conditional uses. The definition proposed with this amendment matches the definition found in the CDC and DLCD's model code.

Planning Commission and Staff concur that the definitions should be made consistent between the two documents and propose the following:

~~These definitions are intended to assist in understanding the intent of the Comprehensive Plan and are consistent with definitions used in supporting and implementing documents of the Plan.~~

For the purpose of the Comprehensive Plan, the following terms or words are defined as follows:

…

Conditional Use. ~~A proposed use of land which may be allowed after the City Planning Commission has determined that the proposed use is appropriate for the site, compatible with surrounding uses, is supported by City public facilities, and is of overall benefit to the community and meets all other relevant criteria.~~ A use which may be permitted by the approval authority following a public hearing, upon findings by the authority that the approval criteria have been met or will be met upon satisfaction of conditions of approval.

BACK TO TOP

Issue No. 3: Modify portions of Goal 9 of the Comprehensive Plan to emphasize the City's commitment to economic development. In consideration of this project's focus on economic development, which is the theme of Statewide Land Use/Comprehensive Plan Goal 9, Staff recommended updating the language under Goal 9 of the West Linn Comprehensive Plan to reflect the City's current attitude toward economic development.

Planning Commission's position: The Planning Commission agrees that this section should be updated to reflect the City's current position on economic development. The Planning Commission believes that the paragraph beginning with "*Notwithstanding these projections…*" on this page should be retained as support for prioritizing home occupations that will not dramatically alter the existing character of the City:

GOAL 9: ECONOMIC DEVELOPMENT
BACKGROUND AND FINDINGS

…

Creation of a strong and diverse economic environment is a priority for the City as it is an essential component for the City to maintain its excellent quality of life. Sustainable economic activities provide services for residents, create jobs, offer opportunities, and generate tax revenue. In particular, the City's economic development efforts should promote development that is well-planned, contextually appropriate, and which enhances the overall quality of life for our residents. These could range from smaller home-based businesses in residential areas to more vibrant mixed use developments near the Arch Bridge that would serve tourists and visitors to the City.

West Linn has significant strengths as a location for employers. West Linn is conveniently located on the regional transportation network with two interchanges off of I-205, Highway 43, bridge connections to Oregon City and is within 30 minutes of the Portland International Airport. It is a 20 to 30 minute auto commute to the major employment centers of Portland, Vancouver, Beaverton, Gresham, Wilsonville and Hillsboro. This locational advantage can help provide options for residents employed outside West Linn and bring employment opportunities to the City.

….

Metro projects employment in the City to be 5,725 in 2017. City projections, based on a 1999 inventory of vacant and underutilized land zoned for commercial and industrial use within the City, indicate that West Linn could accommodate between 4,840 and 6,045 jobs by the year 2017, depending on market factors and the degree commercial areas develop and/or redevelop over time. This represents an increase of between 1,048 and 2,253 new employees in all employment sectors since 1996, with the greatest increases in office, retail, and service sectors.

Notwithstanding these projections, the residents of the City have clearly expressed an interest in retaining the City's quiet residential character (community survey prepared prior to preparation of this Comprehensive Plan on 10/16/98). Recognizing the difficulty of accommodating the projected employment and retaining the City's current characteristics, planning will be directed towards

enhancement and retention of the employment base currently in existence. In particular, the City should encourage the type of new home-based businesses that do not require commercial infrastructure and do not negatively impact surrounding residences and neighborhoods.

GOALS, POLICIES, AND RECOMMENDED ACTION MEASURES

GOALS

1. Support telecommuting, home-based businesses compatible with residential neighborhoods-and, in general, a higher jobs-to-housing ratio.

2. Encourage the retention, expansion and economic viability of existing business and industry.

3. Encourage businesses that enhance the community; provide wanted goods and services; and pay living wages. Small, locally-owned businesses with strong ties to the community are especially desired.

4. Provide adequate commercial and industrial land for a range of employment opportunities in the City.

5. Make the most efficient use of our existing commercial and industrial lands.

6. Retain, strengthen, and expand the City's existing business base.

POLICIES

1. Promote home occupations by developing and implementing supportive zoning and building codes and services and other regulations; ~~require compatibility~~ that are compatible with surrounding neighbor~~s~~hoods.

2. Encourage West Linn employers, including the City, to offer the option to telecommute (i.e., work from home).

3. Support and encourage telecommunications, printing, and similar types of business support firms.

4. Update City regulations to respond to changes in technology as they affect local businesses.

5. Maintain public facilities (specifically right-of-way improvements) in established commercial and industrial districts to promote economic activity.

6. Develop a working partnership with the Chamber of Commerce, business community, and various agencies and organizations, such as the School District, to meet the economic needs of West Linn.

7. Interact with Tri-Met, Metro, the Port of Portland, Oregon Department of Economic Development, and other organizations in economic development planning and implementation efforts.

8. Maximize the use of regional, state, and federal funding for infrastructure planning and development.

9. Adopt City regulations that are easy to understand and contain development standards that can be uniformly applied.

10. Enforce design and development standards for industrial areas.

11. Encourage the economic vitality of the four existing commercial areas.

~~12. Encourage the development of a tele-community center.~~

13. Continue to maintain good working relationships with property owners in industrial areas overlooking the Willamette River to ensure the City is "at the table" when these areas transition to other uses.

14. Support efforts and programs that promote tourism in the City.

RECOMMENDED ACTION MEASURES

1. Explore ways to support and improve the business climate and enhance employment opportunities ~~for businesses~~ in the City.

2. Inventory and maintain a list of vacant and redevelopable sites for new or expanding businesses.

3. Encourage a business environment and businesses that are viable and sustainable and that add to the overall quality of life in the community.

4. ~~Identify businesses, including those that support home occupations that do not negatively impact surrounding residences and neighborhoods, that the City will encourage to develop or expand in West Linn.~~ Actively identify and pursue businesses that will have a positive overall impact on the community to develop or expand in West Linn.

5. Investigate incentives and improve regulations to support locally owned businesses.

6. Identify and provide improvements for infrastructure needs to support appropriately located businesses.

7. Recommend a West Linn business representative to serve on the Clackamas County Economic Development Commission (EDC).

8. Develop and ~~M~~maintain a good working relationship with the West Linn business organizations.

9. Develop and ~~M~~maintain a good working relationship with the West Linn-Wilsonville School District.

10. Participate in regional efforts to encourage employers and policy makers to promote telecommuting and other flexible work arrangements.

~~11. Encourage the development of a tele-community center.~~ Develop and implement a strategy for assisting and supporting locally owned businesses, particularly successful home-based businesses and start-ups (e.g. support for a small business center, regulatory modifications, assisting with business education, identifying grant opportunities, etc.)

12. ~~Explore the possibility of creating~~ Create a master plan ~~special mixed use zone~~ for the ~~industrial~~ Arch Bridge area and prepare a planning framework and proposed CDC revisions, as necessary to implement the plan~~overlooking the Willamette Falls~~.

13. Explore opportunities, and create specific district plans and regulations, as necessary for each of the City's commercial areas.

~~13. Explore ways of encouraging home-based businesses that do not negatively impact surrounding residences and neighborhoods.~~

~~14. Explore the availability of high-speed data connections for voice and data transmission to all homes.~~

14. Engage and collaborate with regional partners to further our economic development efforts; particularly with regard to procuring additional sources of revenue, promoting tourism opportunities, and providing technical assistance.

15. Regularly evaluate the City's Economic Development Plan and update it as required.

16. Establish and support a standing advisory board to advise the City Council and to advance economic development efforts in the City.

Staff's position: Staff agrees with the Planning Commission's proposal, with the exception that the paragraph beginning with, "*Notwithstanding these projections…*" on page 15 be deleted. Staff and the EDC believe that this paragraph does not accurately reflect the City's position on attracting and retaining employment in West Linn. Staff proposes modifying the language under this Goal to more accurately recognize the importance of Economic Development as a priority in the City and to incorporate elements of the City's approved Economic Development Plan into the Comprehensive Plan. The paragraph proposed for deletion, which was added to the Plan in 2003, refers to one survey from seventeen years ago, minimizes economic development efforts and emphasizes home occupations as the primary strategy to provide local employment. This language is inconsistent with the City's current belief that more diverse opportunities are necessary. Staff's proposal deletes the following:

~~Notwithstanding these projections, the residents of the City have clearly expressed an interest in retaining the City's quiet residential character (community survey prepared prior to preparation of this Comprehensive Plan on 10/16/98). Recognizing the difficulty of accommodating the projected employment and retaining the City's current characteristics, planning will be directed towards enhancement and retention of the employment base currently in existence. In particular, the City should encourage the type of new home-based businesses that do not require commercial infrastructure and do not negatively impact surrounding residences and neighborhoods.~~

BACK TO TOP

Issue No. 4: Amend quasi-judicial appeals to be heard as "on the record" rather than "de novo." Efforts to reform the existing de novo (appeals heard as new with new evidence permitted and new opportunities to establish standing) appeals process for all administrative and quasi-judicial decisions have been attempted on several occasions in the past. Staff is proposing the process be amended with on the record process to reduce the review and approval costs associated with the current appeal process. This amendment would result in significant cost savings (since 2010 the City has spent in excess of $250,000 processing "de novo" appeal applications – while collecting less than $1,000.00 in fees), higher quality applications being submitted to the Planning Commission, reduced risk for the City in making their decision and more effective citizen involvement for the community. Under the proposed language, the scope of the appeal hearing would be limited to the specific issues requested by the appellant to be reviewed. Arguments will be permitted written and orally, but no new evidence would be permitted to be entered into the record. The proposed amendment includes allowances to permit the Council to open the record in limited circumstances (e.g. to correct procedural or factual errors). The principal concern raised by the Planning Commission is that this change would diminish opportunities for citizens to appeal decisions.

Planning Commission's position: The Planning Commission proposes *no changes* to CDC Section 99.250. The Planning Commission would retain the existing process for de novo appeals. They believe that the de novo process affords the greatest opportunity for public input on local land use decisions which justify the potential additional costs or legal risks borne by the City or the applicant, associated with this process.

Staff's position: Staff proposes replacing the current de novo process with an on-the-record process. This change impacts multiple sections of CDC Chapter 99 including: fees, decisions made by the Planning Director, standing, procedures, etc. Staff recommends establishing an on-the-record process to: expedite the hearings and decision-making process, provide a more reasonable expectation about permit-related costs and duration, and encourage applicants to submit plans that more readily satisfy applicable approval criteria.

The City's current procedures hinder new development investments because the approval timeframe and even rough-level cost estimates are difficult to reliably predict. This unpredictability is due in part to no-cost appeals for neighborhood associations, which encourage more frequent appeals, and the ability to gain standing and submit new evidence during the appeal hearing.

The current appeal process devalues the Planning Commission hearing to a recommending advisory board. It simply allows the party that was not successful to 'continue' the hearing process, and start anew for a small fee (or no fee). This is directly contrary to productive citizen involvement, in part, because it requires all interested parties to continually monitor and be responsible for all of the new information that is presented in order to be able to respond to it anew at the Council meeting. This has the effect of overemphasizing the last testimony received and discounting the value of testimony received prior to and during the Planning Commission meeting. Additionally, the current process allows an applicant to change their application after a denial by the Planning Commission, further devaluing the previous process for all involved. Under the existing de novo process, an appeal body must not only become familiar with the original application, but must also be familiar with any changes that have occurred since the initial hearing body made their decision as well as any new arguments and/or evidence that is received.

Staff proposes the following amendments to implement an on-the-record appeal process:

99.250 APPLICATION FOR APPEAL ~~OR REVIEW~~

A. The ~~application letter~~ notice of appeal ~~or review~~ shall contain:

1. A reference to the application sought to be appealed ~~or reviewed~~;

2. A statement explaining how the petitioner qualifies as a party with standing, as provided by CDC 99.140; and

3. A statement clearly and distinctly identifying the grounds for which the decision should be reversed or modified. The appeal shall identify:

a. applicable approval criteria that were misapplied, or

b. procedural irregularity, and

c. if petitioner is requesting that the Council re-open the record to allow submission of additional written testimony and evidence as part of the appeal, petitioner must show that:

i. The Planning Commission committed a procedural error, through no fault of the petitioner, that prejudiced the petitioner's substantial rights, and that reopening the record before the Council is the only means of correcting the error, or

ii. A factual error occurred before the Planning Commission, through no fault of the petitioner, which is relevant to an approval criterion and material to the decision.

B. The appeal ~~or review~~ application shall be accompanied by the required fee.

C. The hearing on the appeal ~~or review~~ shall be limited to the provisions of CDC 99.280. ~~de novo; however, all evidence presented to any lower approval authority shall be made part of the record.~~

~~D. The appeal or review application may state grounds for appeal or review.~~

99.260 PERSONS ENTITLED TO NOTICE ON APPEAL ~~OR REVIEW~~ – TYPE OF NOTICE

Upon appeal ~~or review~~, notice shall be given by the Director to all persons having standing as provided by CDC 99.140 to notice as required by CDC 99.080. (Ord. 1568, 2008)

99.270 CONTENTS OF NOTICE ~~ON~~ OF APPEAL ~~OR REVIEW~~

Notice given to persons entitled to mailed notice under CDC 99.260 shall:

A. Reference the application sought to be appealed ~~or reviewed~~;

B. List the date, time, and location of the hearing;

C. State the appellant or petitioner name(s);

D. List the grounds for appeal or review stated in the application. ~~for appeal or review, but state that the appeal or review is not limited to the stated grounds for appeal or review and that all relevant issues may be considered;~~

E. State ~~that the hearing on appeal shall be de novo;~~ the grounds on which new argument or testimony may be presented, if any;

F. Include the name of government contact and phone number; and,

G. State that the application and record are available for inspection at no cost, and copies at a reasonable cost.

99.280 TYPE OF APPEAL ~~OR REVIEW~~ HEARING AND SCOPE OF REVIEW

~~*A. All appeals and reviews shall be de novo.*~~

~~*1. The record of the previous application, hearing, and decision shall be incorporated and considered as part of the appeal procedure.*~~

~~*2. If any party requests a continuance of the appeal or review hearing, the City Council may grant a continuance to allow a further hearing or may allow only written submissions. The City Council may limit the scope of any additional testimony or argument after the initial hearing on appeal or review. (Ord. 1474, 2001; Ord. 1568, 2008)*~~

A. An appeal of a decision made by the Planning Director shall be heard on the record.

1. The record of the previous application, hearing, and decision shall be incorporated and considered as part of the appeal procedure.

2. If any party requests a continuance of the appeal hearing, the City Council may grant a continuance to allow a further hearing or may allow only written submissions. The City Council may limit the scope of any additional testimony or argument after the initial hearing on appeal.

B. Except as provided for in 99.280(C), an appeal of a decision made by the Planning Commission shall be confined to:

1. Those issues set forth in the request to appeal; and,

2. The record of the proceedings as well as the oral and written arguments presented which are limited to those issues clearly and distinctly set forth in the notice of appeal;

C. The Council may reopen the record to consider new evidence on a limited basis; specifically, if the Council determines that:

1. A procedural error was committed that prejudiced a party's substantial rights, and reopening the record before the Council is the only means of correcting the error; or

2. A factual error occurred before the lower decision-making body through no fault of the requesting party, that is relevant to an approval criterion and material to the decision.

D. Except when limited reopening of the record is granted, pursuant to this Section, the Council shall not re-examine issues of fact and shall limit its review to determine whether there is substantive evidence in the record to support the findings by the lower decision-making body, or to determine if errors in law were committed by the City. Review shall be limited to the issues clearly identified in the notice of appeal. No issue may be raised on appeal that was not raised before the Planning Commission with sufficient specificity to enable the Commission and the parties to respond.

BACK TO TOP

Issue No. 5: Amend appeal language to no longer exclude neighborhood associations from paying for appeals. Neighborhood associations are allowed to appeal land use decisions at no cost.

Planning Commission position: The Planning Commission recommends *no changes* to this section, since it might hinder citizen involvement.

Staff's position: Staff believes that the City's current ordinance, which charges no fee for appeals initiated by Neighborhood Associations, has resulted in frivolous appeals and excessive cost and expense to taxpayers. Staff proposes maintaining the current $400.00 fee for appeals, for the time-being. However, Staff recommends eliminating the current practice of waiving appeal fees exclusively for neighborhood associations. Appeal hearings have significant costs to the City, both in tax dollars and opportunity costs. Appealing a decision is not free for the applicant, adjacent neighbors, homeowner associations, or any other organization. The $400.00 is not an amount that recaptures the costs of the appeal, but it does help serve to avoid frivolous appeals from being filed; which serve to simply delay projects and drive up costs for the applicant and City. Neighborhood associations have special standing in the process, such as the required NA meeting (which is paid for by the applicant). If at the end of that process, they disagree with the decision and choose to appeal, it seems fair that they should pay no less than any other party in the City to appeal the decision. Of course, it should be noted that the City Council can still decide to call–up a decision for appeal, which would remove the fee for any party. Staff recommends charging a nominal fee for all appeals to promote more thoughtful appeals. Staff's proposes the following:

99.033 FEES

The Council shall adopt a schedule of fees reasonably calculated to defray the expenses of the administrative process. The Council may establish either a set fee or a deposit system in which the applicant pays a deposit and the City determines the total administrative cost at the end of the process and refunds any unused amount of the deposit to the applicant. No additional deposit shall be required for additional costs that are incurred because the matter is referred to or called up by a higher decision-making authority. ~~The Council shall charge no fees for City-initiated land use applications or appeals filed by a recognized neighborhood association pursuant to the provisions of CDC~~ 99.240~~.~~ (Ord. 1527, 2005; Ord. 1568, 2008; Ord. 1604 § 70, 2011)

99.240 AUTHORITY TO APPEAL OR SEEK REVIEW OF A DECISION – EXHAUSTION OF ADMINISTRATIVE REMEDIES

…

C. Formally recognized neighborhood associations have standing and may appeal land use decisions to the appropriate bodies ~~without cost~~ if the Planning Director finds:

…

2. A member of the association ~~must have~~ established standing on behalf of the association~~. The member must have~~ by explicitly identifying ~~ied~~ themselves, in writing or in testimony, as representing the association.

…

5. The neighborhood association may appeal ~~without cost~~ on behalf of an individual or group with standing who is not represented by a recognized association if subsections A, B and C(1) and (3) of this section are met and the neighborhood association finds the issue(s) are of City-wide concern related to the West Linn Comprehensive Plan or the West Linn CDC.

BACK TO TOP

Issue No. 6: Require that decisions by a lower approval body be reviewed/called up by at least a majority of the members of the higher hearing body. An additional amendment is proposed related to how standing is achieved. Under the existing CDC language, persons who attend a public meeting and sign the sign-in sheet are entitled to standing on items before the hearing body that evening. Often times, these people are not in attendance for the hearing but rather to deliver public comments or speak on another matter. Staff and the Planning Commission disagree about the number of people required to call up a decision, but agree about the amendment related the process for establishing standing.

Planning Commission position: The Planning Commission recommends *no changes* to to the existing call up provisions, but concur with the minor amendment regarding standing.

Staff's position: Staff believes that the City's current code, which allows two members of the Planning Commission or City Council to order a review of a decision made by a lower hearing body, is inconsistent with public meetings law. Per administrative decisions and attorney general opinions regarding ORS 174.130[2], a majority of all members of a governing body are required to make a decision. West Linn City Charter, Section 19, recognizes the importance of having a majority make decisions because it states that a "majority of the Council members present at a Council meeting shall be necessary to decide any question before the Council." Staff also believes the decision to review a decision rendered by a lower hearing authority is a decision that should be subject to majority voting and public meeting requirements. The current procedure runs directly counter to transparent government practices.

---

[2] ORS 174.130 provides (http://www.doj.state.or.us/public_records/manual/pages/public_meetings_c.aspx):

> *Any authority conferred by law upon three or more persons may be exercised by a majority of them unless expressly otherwise provided by law.*

…

The language used in ORS 174.130 does not clarify whether the legislative intent was merely to establish a quorum requirement or to require concurrence of a majority of all the members of a body to make a decision. Attorneys General consistently, however, have made the latter interpretation. Further, in 1983, the Attorney General directed the legislature's attention to the Attorney General opinions interpreting the statute and advised that ORS 174.130 might be amended if a more "efficient" decision-making process were desired. ORS 174.130 has not been amended, however. This suggests that the legislature is satisfied with those Attorney General interpretations, making them even more persuasive. Thus, when ORS 174.130 applies, a majority of all members of a board must concur in order to make a decision. There is no specific statutory provision to serve as "other law" to exclude a number of state boards and commissions from the rigors of ORS 174.130.

Staff's proposes the following:

99.160 DECISION BY DIRECTOR

C. A decision made by the Director shall be final as provided by CDC 99.230 unless:

1. A party to the action files a written appeal with the Director within 14 days of the final decision pursuant to CDC 99.240; or

2. ~~Not less than two~~ A majority of the members of the-Commission or ~~two members of~~ the Council order a review within 14 days of the final decision pursuant to CDC 99.240.

D. No Director's decision may modify the request from that set out in the notice given under CDC 99.080 and 99.090, unless new notice be given, except that conditions may be attached to the approval. (Ord. 1568, 2008)

99.170 HEARING PROCEDURES

G. A decision made by the Planning Commission or Historic Review Board shall be final as provided by CDC 99.230 unless:

1. A party to the action files a written appeal with the Director within 14 days of the final decision pursuant to CDC 99.240;

2. ~~Not less than two members~~A majority of the Council order a review within 14 days of the final decision pursuant to CDC 99.240; or

3. It is an expedited land division application for which the provisions of Chapter 197 ORS shall apply.

99.140 ESTABLISHING STANDING TO APPEAL ~~OR REVIEW~~

..

B. The person or recognized neighborhood association appeared before an approval authority other than the Director, either orally or in writing, and provided their name and address; signed-the ~~sign-in sheet or~~ testimony form provided at the hearing; or submitted comments to the Director, in writing, and provided their name and address to the Director regarding a decision. Neighborhood association standing can only be established by a person identifying, either in testimony or in writing, that they represent a specific neighborhood association. (Ord. 1474, 2001; Ord. 1568, 2008)

BACK TO TOP

Issues No. 7, 8, and 9: Revise variance criteria to accommodate more minor requests, clarify criteria, and create a new class of variance called a "special waiver". The changes proposed to the variance section of the CDC are intended to make the criteria more easily understood, more legally defensible, and allow for more creative development in the City.

Regarding the variance criteria (Issue 7): Staff, and in particular the City Attorney, recommends modifying the criteria for Class II variances to make them easier to understand, justify and prepare legally supportable findings. This includes removing a requirement to apply comprehensive plan goals and policies to every variance application. This is the only point on which the PC and Staff disagree with regard to amendments to the variance section of the CDC.

Regarding minor variances (Issue 8): Currently, the Code permits commercial applications to receive "exceptions" from certain code provisions (parking, landscaping, setbacks) under the Design Review process, while residential properties are permitted similar minor variances, as part of Chapter 75 Variances, under a different set of criteria. This has proven to be unwieldy and confusing. Staff has grouped the exception and minor variance language together into Chapter 75 which will be applicable to all applications. The thresholds for modifications are only slightly modified and the criteria for approvals are now standardized. Currently, the criteria for approving a Class I and II variance are the same. This prohibits any opportunities for flexibility. The new standards still include criteria requiring applicants to show that they will not adversely impact adjacent properties while allowing greater flexibility.

Regarding the new "special waiver" language (Issue 9): Many developments/projects are currently constrained from proposing better projects because of inflexibility in the current development regulations. Based on feedback from the Planning Commission and the City Council, this proposal creates a new, alternative approach called a "Special Waiver". The proposal establishes a new subjective variance process to add flexibility to the City's development regulations. The applicant must demonstrate that a proposal could satisfy the purpose and standards being waived, but would like to propose a superior product that does not technically satisfy the standards. They are intended to allow an applicant to offer an alternative design that furthers the intent of the regulation to be waived and which doesn't adversely impact their surroundings. These waivers are discretionary and do not require an applicant to demonstrate that a hardship exists. This is similar to provisions found in "planned developments". A Special Waiver would require review and approval by the Planning Commission.

Planning Commission and Staff concur on all of the proposed amendments related to variances EXCEPT for Section 75.020(1)(d). Staff believes that the policies of the

Comprehensive Plan are too vague and arbitrary to be used as decision-making criteria and recommends that reference be removed from the criterion as shown below:

75.020 CLASSIFICATION OF VARIANCES

1. CLASS II VARIANCE APPROVAL CRITERIA

d. The variance will not result in violations(s) of any other code standard ~~or conflict with the goals and policies of the West Linn Comprehensive Plan~~, and the variance will meet the purposes of the regulation being modified.

With the exception noted above, both the PC and Staff concur with the following:

Chapter 75
VARIANCES AND SPECIAL WAIVERS
Sections:
75.010 PURPOSE
75.020 CLASSIFICATION OF VARIANCES
75.030 ADMINISTRATION AND APPROVAL PROCESS
75.040 TIME LIMIT ON A VARIANCE AND SPECIAL WAIVERS
75.050 APPLICATION
~~75.060 APPROVAL CRITERIA~~
75.06~~7~~0 SITE PLANS AND MAP

75.010 PURPOSE

The purpose of this chapter is to provide standards for ~~the~~ granting ~~of~~ variances and special waivers from the applicable ~~zoning~~ requirements of this code. However, this chapter may not be used to allow a use that is not a specified use in the zone where the land is located or to modify density provisions.

~~The purpose of this chapter is to provide standards for the granting of variances from the applicable zoning requirements of this code where it can be shown that, owing to exceptional and extraordinary circumstances related to a specific piece of property, the literal interpretation of the provisions of the applicable zone would create a burden upon a property owner with no corresponding public benefit, except that no use variance shall be granted~~.

75.020 CLASSIFICATION OF VARIANCES

A. Class I Variance. ~~A Class I variance will involves a small change from the zoning requirements and will only have a minor effect or no effect on adjacent property or occupants.~~ Class I variances provide minor relief from certain code provisions where it can be demonstrated that the modification will not

harm adjacent properties, and it conforms with any other code requirements. Class I variances are allowed for the following code provisions: ~~and includes the following variances:~~

1. Required yard and minimum lot dimensional requirements. Required yards may be modified up to 20%, lot dimensions by up to 10 % and lot area by up to 5% if the decision making authority finds that the resulting approval:

a. Provides for a more efficient use of the site;

b. Preserves and incorporates natural features into the overall design of the project;

c. Does not adversely affect adjoining properties in terms of light, air circulation, noise levels, privacy, and fire hazards; and

d. Provides for safe vehicular and pedestrian access to the site and safe on-site vehicular and pedestrian circulation.

2. Off-street parking dimensional and minimum number of space requirements may be modified up to 10% if the decision making authority finds that the use is designed for a specific purpose, which is intended to be permanent in nature.

3. Dimensional sign requirements may be modified up to 10% if the decision making authority finds that the proposed larger sign is:

1. Necessary for adequate identification of the use on the property; and

2. Compatible with the overall site plan, the structural improvements, and with the structures and uses on adjoining properties.

D. Landscaping requirements in the applicable zone may be modified up to 10% if the decision making authority finds that the resulting approval:

1. Provides for a more efficient use of the site;

2. Preserves and incorporates natural features into the overall design of the project; and,

3. Will have no adverse effect on adjoining property.

~~1. A variance which allows a structure to encroach into a required setback area as follows:~~

~~a. Front yard setback by two feet or less.~~

~~b. Side yard setback by two feet or less.~~

~~c. Rear yard setback by five feet or less.~~

~~2. A variance to the minimum lot dimensional requirements as follows:~~

~~a. Lot width by five or less feet.~~

~~b. Lot frontage by five or less feet.~~

~~c. Lot depth by 10 or less feet.~~

~~d. Lot area by five percent or less of minimum required area.~~

B. Class II Variance. Class II variances may be utilized when strict application of code requirements would be inconsistent with the general purpose of the CDC and would create a burden upon a property owner with no corresponding public benefit. A Class II variance will involve a significant change from the ~~zoning~~ code requirements and may create adverse impacts on adjacent property or occupants. It includes any variance that is not classified as a Class I variance or Special Waiver.~~, and includes the following variances:~~

~~*1. A variance which allows a structure to encroach into a required setback area as follows:*~~

~~*a. Front yard setback by more than two feet.*~~

~~*b. Side yard setback by more than two feet.*~~

~~*c. Rear yard setback by more than five feet.*~~

~~*2. Variances to the minimum lot dimensional requirements as follows:*~~

~~*a. Lot width by more than five feet.*~~

~~*b. Lot frontage by more than five feet.*~~

~~*c. Lot depth by more than 10 feet.*~~

~~*d. Lot area by more than five percent of minimum required area.*~~

~~*3. A variance to any of the other zoning provisions including, but not limited to, the lot coverage and building height.*~~

~~*C*~~*D. ~~No variances shall be granted which will allow a use which is not a permitted or a conditional use in the district, and no variance shall be granted to the density provisions.~~*

1. CLASS II VARIANCE APPROVAL CRITERIA

The approval authority may impose appropriate conditions to ensure compliance with the criteria. The appropriate approval authority shall approve a variance request if all the following criteria are met and corresponding findings of fact prepared. ~~The approval authority may impose appropriate conditions to ensure compliance with the criteria. The approval authority shall deny the variance if any of the criteria are not met.~~

a. The variance is the minimum variance necessary to make reasonable use of the property. To make this determination, the following factors may be considered, together with any other relevant facts or circumstances:

i. Whether the development is similar in size, intensity and type to developments on other properties in the City that have the same zoning designation.

ii. Physical characteristics of the property such as lot size or shape, topography, or the existence of natural resources.

iii. The potential for economic development of the subject property.

b. The variance will not result in violation(s) of any other code standard or conflict with the policies of the West Linn Comprehensive Plan, and the variance will meet the purposes of the regulation being modified.

c. *The variance will not be detrimental to the public health, safety or welfare, or injurious to properties, improvements, or natural or historic resources in the vicinity.*

d. *The need for the variance was not created by the applicant and/or owner requesting the variance.*

e. *If more than one variance is requested, the cumulative effect of the variances results in a project that is consistent with the overall purpose of the zone.*

~~*A. Exceptional or extraordinary circumstances apply to the property which do not apply generally to other properties in the same zone or vicinity, and result from lot size or shape, legally existing prior to the date of this code, topography, or other circumstances over which the applicant has no control.*~~

~~*B. The variance is necessary for the preservation of a property right of the applicant, which is substantially the same as a right possessed by owners of other property in the same zone or vicinity.*~~

~~*C. The authorization of the variance will not be materially detrimental to the purposes and standards of this code, will not be inconsistent with all other regulatory requirements, and will not conflict with the goals and policies of the West Linn Comprehensive Plan.*~~

~~*D. The variance request is the minimum variance which would alleviate the exceptional and extraordinary circumstance.*~~

~~*E. The exceptional and extraordinary circumstance does not arise from the violation of this code.*~~

~~*F. The variance will not impose physical limitations on other properties or uses in the area, and will not impose physical limitations on future use of neighboring vacant or underdeveloped properties as authorized by the underlying zoning classification.*~~

75.020 CLASSIFICATION OF VARIANCES

C. Special Waivers. Special Waivers are only applicable in mixed use and non-residential zoning districts. Special Waivers may be granted by the approval authority when it can be shown that the proposed site design provides a superior means of furthering the intent and purpose of the regulation to be waived. A Special Waiver involves a waiver of a standard to permit a specific proposed development. It does not require demonstration of a hardship. It is a request to modify specific requirements in order to provide a superior site design that would not otherwise be possible under the standard requirements of the Code.

1. The Planning Commission may approve a Special Waiver due to the unique nature of the proposed development if it finds that there is sufficient evidence to demonstrate that the proposed development:

a. Demonstrates that the proposed development can comply with the regulation to be waived, but the waiver provides an alternative means of furthering the purpose of the regulation to be waived;

b. Will not be materially detrimental to the public welfare or injurious to other property in the area when compared with the impacts of development otherwise permitted;

c. Provides adequate area for aesthetic design treatment to mitigate potential visual impacts from the use on surrounding properties and uses; and,

d. The characteristics of the site are suitable for the proposed use considering size, shape, location, topography, and natural features.

75.030 ADMINISTRATION AND APPROVAL PROCESS

A. Class I variances shall be decided by the Planning Director in the manner set forth in CDC 99.060(A). An appeal may be taken as provided by CDC 99.240(A).

B. Class II variances and Special Waivers shall be decided by the Planning Commission in the manner set forth in CDC 99.060(B). A petition for review by the Council may be filed as provided by CDC 99.240(B).

75.040 TIME LIMIT ON A VARIANCE AND SPECIAL WAIVERS

Approval of a variance or special waiver shall be void after three years unless substantial construction has taken place or an extension is granted per Chapter 99 CDC.

75.050 APPLICATION

A. A variance request shall be initiated by the property owner or the owner's authorized agent.

B. A prerequisite to the filing of an application for a Class II variance or Special Waiver is a pre-application conference at which time the Planning Director shall explain the requirements and provide the appropriate form(s).

C. An application for a variance shall include the completed application form and:

1. A narrative which addresses the approval criteria set forth in CDC 75.060, and which sustains the applicant's burden of proof.

2. A site plan as provided by CDC 75.070.

~~*One original application form must be submitted. Three copies at the original scale and three copies reduced to 11 inches by 17 inches or smaller of all drawings and plans must be submitted. Three copies of all other items must be submitted. When the application submittal is determined to be complete, additional copies may be required as determined by the Planning Department.*~~

D. Requests for more than one Class II variance for the same lot shall be consolidated in one application and reviewed concurrently by the City.

E. Not more than two (2) Class II variances may be approved for any one lot in a continuous 12-month period.

F. The applicant shall pay the requisite fee.

~~*75.060 APPROVAL CRITERIA*~~

~~*The appropriate approval authority shall approve a variance request if all the following criteria are met and corresponding findings of fact prepared. The approval authority may impose appropriate conditions to ensure compliance with the criteria. The approval authority shall deny the variance if any of the criteria are not met.*~~

~~*A. Exceptional or extraordinary circumstances apply to the property which do not apply generally to other properties in the same zone or vicinity, and result from lot size or shape, legally existing prior to the date of this code, topography, or other circumstances over which the applicant has no control.*~~

~~*B. The variance is necessary for the preservation of a property right of the applicant, which is substantially the same as a right possessed by owners of other property in the same zone or vicinity.*~~

~~*C. The authorization of the variance will not be materially detrimental to the purposes and standards of this code, will not be inconsistent with all other regulatory requirements, and will not conflict with the goals and policies of the West Linn Comprehensive Plan.*~~

~~*D. The variance request is the minimum variance which would alleviate the exceptional and extraordinary circumstance.*~~

~~*E. The exceptional and extraordinary circumstance does not arise from the violation of this code.*~~

~~*F. The variance will not impose physical limitations on other properties or uses in the area, and will not impose physical limitations on future use of neighboring vacant or underdeveloped properties as authorized by the underlying zoning classification. (Ord. 1442, 1999)*~~

75.0~~7~~60 SITE PLANS AND MAP

A. All plot plans and maps shall include the name, address, and telephone number of the applicant; the scale; north arrow; and a vicinity map.

B. The applicant shall submit a plot plan drawn to an appropriate scale (in order of preference: one inch equals 10 feet to one inch equals 30 feet) which shows the following:

…

99.060 APPROVAL AUTHORITY

This section explains the authority of the Planning Director, Planning Commission, City Council, and Historic Review Board as it relates to quasi-judicial and legislative action.

…

B. Planning Commission authority. The Planning Commission shall have the authority to:

1. Make a recommendation to approve, deny, or approve with conditions to the Council:

a. A quasi-judicial Comprehensive Plan Map amendment. (Chapter 105 CDC).

b. A quasi-judicial zone change involving a concurrent application for a quasi-judicial Plan Map amendment as provided by CDC 99.030(A) (Chapter 105 CDC).

c. The designation of an historic landmark.

2. Approve, deny, or approve with conditions the following applications:

a. A quasi-judicial zone change application (Chapter 105 CDC).

b. A temporary use or structure application for a period of greater than six months (Chapter 35 CDC).

c. A conditional use (Chapter 60 CDC).

d. Enlargement of a non-conforming use or alteration for a structure containing a non-conforming use (Chapter 66 CDC).

e. Enlargement or alteration of a non-single-family residential non-conforming use (Chapter 66 CDC).

f. Class II variance or special waiver (Chapter 75 CDC).

g. Subdivision (Chapter 85 CDC).

h. Planned unit development (Chapter 24 CDC).

i. Design review, Class II (Chapter 55 CDC).

j. Parks design review, Class II (Chapter 56 CDC).

k. Any matter not specifically assigned to another approval authority.

l. Extensions of approval when the Planning Commission acted as the initial decision-making authority.

3. Revoke or modify an approval as provided by CDC 99.330 for any application approved by the Planning Commission or Planning Director.

4. Make an unlisted use determination.

5. An appeal of the Planning Director's interpretation of the code pursuant to CDC 01.060.

BACK TO TOP

Issue No. 10: Reduce the number of paper copies submitted by the applicant from three to one. The CDC currently requires an applicant to submit three complete paper copies of their development application to the City. Per State statute, the City is required to retain one paper copy of the applicant's submittal as part of the permanent record.

Planning Commission and Staff concur that one paper copy and one electronic copy of a development review application packet is sufficient and proposes the following:

27.050 APPLICATION

Applications for a flood management area permit must include the following:

…

C. An application submittal that includes the completed application form, ~~and~~ one~~three~~ copy~~ies~~ of written responses addressing CDC 27.060, 27.070, 27.080 (if applicable), and 27.090 (if applicable), one~~three~~ copy~~ies~~ of all maps and plans at the original scale, ~~and three~~ one copy~~ies~~ of all maps and plans reduced to a paper size not greater than 11 inches by 17 inches, and a copy in a digital format acceptable to the City.

…

28.090 SUBMITTAL REQUIREMENTS: APPLICATION

…

C. An application for a protection area permit shall include the completed application and:

1. Narrative which addresses the approval criteria of CDC 28.110.

…

One original application form must be submitted. ~~Three~~ One copy~~ies~~ at the original scale and ~~three~~ one copy~~ies~~ reduced to 11 inches by 17 inches or smaller of all drawings and plans must be submitted. ~~Three~~ One copy~~ies~~ of all other items, including the narrative, must be submitted. The applicant shall also submit ~~a disk, in electronic readable format, of the complete application~~one copy of the complete application in a digital format acceptable to the City. When the application submittal is determined to be complete, additional copies may be required as determined by the Planning Director.

…

32.040 APPLICATION

…

C. The application shall include a site plan and topographic map of the parcel pursuant to CDC 32.060. The applicant shall submit ~~three~~ one copy~~ies~~ of all maps and diagrams at original scale and ~~three~~ one

copy~~ies~~ reduced to a paper size not greater than 11 inches by 17 inches, and ~~an electronic copy of all maps on a compact disc~~one copy in a digital format acceptable to the City. The Planning Director may require the map to be prepared by a registered land surveyor to ensure accuracy.

…

52.104 APPLICATION

A. Permanent sign permits.

…

2. An application for a sign permit shall be made on a form prescribed by the Planning Director and shall be filed with the Planning and Development Department. The application shall include ~~three~~ one copy~~ies~~ of a sketch drawn to scale indicating the following:

…

55.070 SUBMITTAL REQUIREMENTS

…

D. The applicant shall submit a completed application form and:

1. The development plan for a Class I design review shall contain the following elements:

…

d. Pursuant to CDC 55.085, additional submittal material may be required.

One original application form must be submitted. ~~Three~~ One copy~~ies~~ at the original scale and ~~three~~ one copy~~ies~~ reduced to 11 inches by 17 inches or smaller of all drawings and plans must be submitted. ~~Three~~ One copy~~ies~~ of all other items must be submitted. The applicant shall also submit one copy of the complete application in a digital format acceptable to the City. When the application submittal is determined to be complete, additional copies may be required as determined by the Planning Department.

…

56.075 SUBMITTAL STANDARDS FOR CLASS I PARKS DESIGN REVIEW

A. The application for a Class I parks design review shall contain the following elements:

…

5. One~~Three~~ copy~~ies~~ at the original scale and one~~three~~ copy~~ies~~ reduced to 11 inches by 17 inches or smaller of all drawings and plans must be submitted. One~~Three~~ copy~~ies~~ of all other items must be submitted. The applicant shall also submit one copy of the complete application in a digital format acceptable to the City. When the application submittal is determined to be complete, additional copies may be required as determined by the Planning Department.

60.060 APPLICATION

…

D. An application for a conditional use shall include the completed application form and:

…

2. A site plan as provided by CDC 60.080.

One original application form must be submitted. ~~Three~~ One copy~~ies~~ at the original scale and ~~three~~ one copy~~ies~~ reduced to 11 inches by 17 inches or smaller of all drawings and plans must be submitted. ~~Three~~ One copy~~ies~~ of all other items must be submitted. The applicant shall also submit one copy of the complete application in a digital format acceptable to the City. When the application submittal is determined to be complete, additional copies may be required as determined by the Planning Department.

…

65.120 APPLICATION

…

C. An application shall include the completed application form and:

…

2. A site plan as provided by CDC 65.140.

One original application form must be submitted. ~~Three~~ One copy~~ies~~ at the original scale and ~~three~~one copy~~ies~~ reduced to 11 inches by 17 inches or smaller of all drawings and plans must be submitted. One~~Three~~ copy~~ies~~ of all other items must be submitted. The applicant shall also submit one copy of the complete application in a digital format acceptable to the City. When the application submittal is determined to be complete, additional copies may be required as determined by the Planning Department.

…

75.050 APPLICATION

…

C. An application for a variance shall include the completed application form and:

…

2. A site plan as provided by CDC 75.070.

One original application form must be submitted. One~~Three~~ copy~~ies~~ at the original scale and one~~three~~ copy~~ies~~ reduced to 11 inches by 17 inches or smaller of all drawings and plans must be submitted. One~~Three~~ copy~~ies~~ of all other items must be submitted. The applicant shall also submit one copy of the complete application in a digital format acceptable to the City. When the application submittal is determined to be complete, additional copies may be required as determined by the Planning Department.

…

85.150 APPLICATION – TENTATIVE PLAN

A. The applicant shall submit a completed application which shall include:

…

1. *Copies of the tentative plan and supplemental drawings shall include one~~three~~ copy~~ies~~ at the original scale plus one~~three~~ copy~~ies~~ reduced in paper size not greater than 11 inches by 17 inches. The applicant shall also submit one copy of the complete application in a digital format acceptable to the City. When the application submittal is determined to be complete, additional copies may be required as determined by the Planning Department.*

BACK TO TOP

Issue No. 11: Exempt certain minor activities in the public right-of-way and fences on non-residential properties from Class I Design Review. These types of minor activities are currently subject to the Class I Design Review process which requires the submittal of plans, a fee and narrative responses to CDC criteria as well as notice to adjacent property owners before they may be considered for approval by the Planning Director. The Planning Director decision is then appealable to the City Council. Imposing excessive regulations on these types of minor improvements only serves to discourage them from being proposed by private developers and public entities (such as the City). Our codes should be designed to encourage desirable investments on commercial property and in our rights-of-way, not discourage them. This amendment would permit public sidewalks and non-residential fences and similar improvements as an "over the counter" approval rather than going through the Design Review process. These projects still receive review from staff and will still be subject to all applicable regulations, particularly related ADA requirements, compatible design, setbacks, etc.

Planning Commission and Staff concur with the changes, as follows**:**

Chapter 55 Design Review

55.020 CLASSES OF DESIGN REVIEW ~~APPLICABILITY~~

A. Class I Design Review. The following are subject to Class I Design Review:

1. *Modification of an office, commercial, industrial, public or multi-family structure for purposes of enhancing the aesthetics of the building and not increasing the interior usable space (e.g., covered walkways or entryways, addition of unoccupied features such as cupolas, clock towers, etc.).*
2. *Significant road realignment (when not part of a subdivision or partition plat process). "Significant" shall be defined by the length of the realignment and/or extent of redesign, and/or the natural features or manmade structures that will be impacted or removed.*
3. *Addition or reduction of less than five percent of total square footage of a commercial, office, public, multi-family, or industrial building.*
4. *Modification of a landscape plan (including water features, ponds, pergolas, arbors, artwork, sculptings, etc.).*
5. *Minor modifications and/or upgrades of pump stations, reservoirs, and storm detention facilities.*
6. *Americans with Disability Act compliance that significantly alters the exterior of the building (ramps are exempt).*
7. *Freestanding art and statuary over five feet tall.*
8. *Other land uses and activities may be added if the Planning Director makes written findings that the activity/use will not increase off-site impacts and is consistent with the type and/or scale of activities/uses listed above.*
9. *No design review is required if the applicant proposes to repair or replace one of the listed items. The Planning Director shall make the determination of whether an applicant is*

proposing a repair or replacement. However, Class I design review applies when one of the following improvements is part of a minor redesign or remodel.

a. Sidewalks on Private Property.

b. Loading docks.

c. Addition or reduction of parking stalls.

d. Revised parking alignment.

e. Revised circulation.

f. Revised points of ingress/egress to a site.

g. Heating, ventilation, and air conditioners (HVAC) that are visible from the public right-of-way.

B. Class II Design Review. Class II design review applies to all uses/activities except those uses/activities listed under Class I design review, and the exemptions of CDC 55.025. Class II design review applies to the proposed improvements listed in CDC 55.020 when the proposed improvement (e.g., new sidewalk) is part of a major commercial, office, industrial, public, or multi-family construction project (e.g., a new shopping center).

~~*55.020 APPLICABILITY*~~

~~*This chapter provides two levels of design review: Class I and Class II. Class I design review applies to land uses and activities that require only a minimal amount of review. Class II design review is reserved for land use and activities that require comprehensive review. Class I design review applies to the following land uses and activities:*~~

~~*A. Sidewalks.*[1]~~

~~*B. Transit shelters.*~~

~~*C. Fences and walls (at non-single-family/duplex residential sites).*~~

~~*D. Modification of an office, commercial, industrial, public or multi-family structure for purposes of enhancing the aesthetics of the building and not increasing the interior usable space (e.g., covered walkways or entryways, addition of unoccupied features such as cupolas, clock towers, etc.).*~~

~~*E. Significant road realignment (when not part of a subdivision or partition plat process). "Significant" shall be defined by the length of the realignment and/or extent of redesign, and/or the natural features or manmade structures that will be impacted or removed.*~~

~~*F. Loading docks.*[1]~~

~~*G. Addition or reduction of less than five percent of total square footage of a commercial, office, public, multi-family, or industrial building.*~~

~~*H. Addition or reduction of parking stalls.*[1]~~

~~*I. Revised parking alignment.*[1]~~

~~*J. Revised circulation.*[1]~~

~~*K. Revised points of ingress/egress to a site.*[1]~~

~~*L. Modification of a landscape plan (including water features, ponds, pergolas, arbors, artwork, sculptings, etc.).*~~

~~*M. Minor modifications and/or upgrades of pump stations, reservoirs, and storm detention facilities.*~~

~~*N. Americans with Disability Act compliance that significantly alters the exterior of the building (ramps are exempt).*~~

~~*O. Heating, ventilation, and air conditioners (HVAC) that are visible from right-of-way or abutting property.*~~[1]

~~*P. Freestanding art and statuary over five feet tall.*~~

~~*Q. Other land uses and activities may be added if the Planning Director makes written findings that the activity/use will not increase off-site impacts and is consistent with the type and/or scale of activities/uses listed above.*~~

~~*Class II design review applies to all uses/activities except those uses/activities listed under Class I design review, and the exceptions of CDC 55.025.*~~

~~[1]*Class II design review applies when the proposed improvement, land use, or activity (e.g., new sidewalks) is part of a major commercial, office, industrial, public, or multi-family construction project (e.g., a new shopping center). Class I design review applies when this improvement, use, or activity is part of a minor redesign or remodel. No design review is required if the applicant proposes to repair or replace one of the footnoted items. This shall be a Planning Director's code interpretation.*~~

~~*(Ord. 1547, 2007; Ord. 1604 § 50, 2011)*~~

BACK TO TOP

Issue No. 12: Permit amendments to "approved conditional uses" to be reviewed similarly to amendments to "uses permitted outright." This is another example of a code provision that discourages investments from being made in the City. Currently any amendment to an approved conditional use requires a full resubmittal and entirely new decision-making process, including all notices and public hearings. This is onerous and unnecessary. The City has a process for minor amendments to development approvals. This code change would apply the same standards and review to conditional use approvals. Note that any change to conditions of approval or a change beyond a certain threshold is treated as a new application and subject to the full submittal and hearings process.

Planning Commission and Staff concur with the changes, as follows:

60.050 BUILDING PERMITS FOR AN APPROVED CONDITIONAL USE

A. Building permits for all or any portion of a conditional use shall be issued only on the basis of the conditional use plan and conditions as approved by the Planning Commission.

~~*B. Any change in the conditional use plan or conditions of approval shall require a new application and hearing pursuant to the provisions set forth in this chapter and CDC 99.120(B).*~~

BACK TO TOP

Issue No. 13: Eliminate the permit process for A-frame signs. Staff is proposing to ease the restrictions on A-frame signs to encourage their use, with restrictions, in pedestrian-friendly commercial areas. Appropriate A-frame signage can create a friendly shopping experience and significantly help retailers. The City currently regulates these as 'temporary signs'; these amendments would restrict them to the GC district, require them to be in close proximity to the business entrance and would remove the requirement to get a permit and pay a fee. The City has historically spent more time (and money) processing sign applications than is collected from the permit fee.

Planning Commission and Staff concur with these changes, as follows:

Chapter 2 DEFINITIONS

Sign, A-frame. A temporary, freestanding, and portable form of advertising, also known as a sandwich board. ~~A-frames may be placed within 10 feet of the structure containing the business being promoted and are subject to the same time limits as other temporary signs.~~

52.210(K)(3) APPROVAL STANDARDS

….

3. Temporary signs. Temporary A-frame ~~sandwich board~~ signs are ~~permitted~~ allowed without a permit; however, they ~~and~~ shall be designed to be consistent with the ~~aforementioned~~ sign and type face provisions. (Ord. 1539, 2006; Ord. 1604 § 48, 2011; Ord. 1613 § 8, 2013)

52.109 EXEMPTIONS

….

F. A-frame signs:

Signs in the Willamette Falls Drive Commercial District shall comply with standards in CDC 52.210(K).

2. All other A-frame signs for businesses are subject to the following standards:

a. The business is located in the General Commercial (GC) zoning district;

b. The sign is professionally manufactured, maintained and in good repair. No attachments to the sign are permitted;

c. No part of the sign may exceed 32" in width and 36" in height;

d. The sign shall only be displayed during times that the business is open to the public;

e. The location of the sign must maintain four (4) feet of unobstructed sidewalk width per 53.030(A);

f. One A-frame sign is permitted per business; and,

g. The sign must be located within 25 feet of an entrance to business being advertised.

BACK TO TOP

Issue No. 14: Change "hotels" from conditional uses to a use permitted outright in the General Commercial and OBC zoning districts. Hotels are currently only permitted through the conditional use process, which adds significant cost, uncertainty and risk for developers proposing this type of use. Because the impacts from a hotel (mainly vehicular traffic, restaurants, design, etc.) are similar to other uses permitted outright (restaurants and bars, apartments, medical offices and retail stores) in this zone, and because of the potential local demand and benefits that may accrue from a hotel, staff recommended permitting hotels outright. Permitting these uses outright would help clarify, for local developers, the City's standards and expectations for these types of uses.

Additionally, based on discussions with the Planning Commission, this recommendation includes permitting religious institutions and community and fraternal uses as allowed outright in certain commercial centers. The Planning Commission believed that additional review of community centers was still warranted in commercial areas outside of highway 43 and Salamo and Blankenship Rds. Regarding assembly uses (community centers, religious institutions and fraternal organizations); the change applies to all commercial centers except for the Willamette Commercial area. Because the Willamette Commercial area has a unique set of standards to guide its architectural character and physical layout (which the other commercial centers do not) it is appropriate to anticipate that impacts in this zone may be different than in other GC or OBC zones in West Linn.

Note that some reformatting to the "extended hour businesses" is included below, but it only serves to clarify and does not change regulation of these uses.

Planning Commission and Staff concur with these changes, as follows:

General Commercial

19.030 PERMITTED USES

The following uses are permitted outright in this zone:

…

15. Hotel/Motel; including those operating as extended hour businesses.

…

25. Extended-hour businesses that do not include the construction of a new building or expansion of an existing structure. ~~CUPs shall be required when:~~

~~a. A new extended-hour business is proposed by construction of a new building.~~

~~b. Expansion of the size of existing buildings for use by an extended-hour business is proposed.~~

…

27. Lodge, fraternal, community center, and civic assembly within the commercial districts along Highway 43, Salamo Road or Blankenship Road.

28. Religious Institutions within the commercial districts along Highway 43, Salamo Road, or Blankenship Road.

~~*19.040 ACCESSORY USES*~~

~~*Accessory uses are allowed in this zone as provided by Chapter 34 CDC.*~~

…

19.060 CONDITIONAL USES

The following are conditional uses which may be allowed in this zone subject to the provisions of Chapter 60 CDC, Conditional Uses:

…

~~*20. Transient lodging.*~~

…

22. Religious institutions not listed as permitted uses in 19.030.

…

25. Lodge, fraternal, community center and civic assembly not listed as permitted uses in 19.030. (Ord. 1192, 1987; Ord. 1339, 1992; Ord. 1463, 2000; Ord. 1523, 2005; Ord. 1590 § 1, 2009; Ord. 1604 §§ 16, 17, 2011)

26. Extended hour businesses that include a new building or expansion of an existing structure.

OFFICE BUSINESS CENTER

21.030 PERMITTED USES

The following uses are permitted outright in this zone:

…

7. Hotel/Motel; including those operating as extended hour businesses.

…

~~*21.040 ACCESSORY USES*~~

~~*Accessory uses are allowed in this zone as provided by Chapter 34 CDC.*~~

21.060 CONDITIONAL USES

The following uses are conditional uses which may be allowed in this zone subject to the provisions of Chapter 60 CDC, Conditional Use:

…

1 ~~*6. Transient lodging and associated convention facilities.*~~

2 …

BACK TO TOP

Issue No. 15: Eliminate certain lot dimensional and ambiguous setback requirements. In addition to minimum lot area, the CDC requires that each lot must also satisfy a minimum depth, a minimum depth of non-steeply sloped land, average width and frontage width (width at the property line adjacent the public street) dimensional standard. These regulations on dimensions are among the most commonly cited by Staff and developers as problematic due to their inflexibility.

There is also a need to eliminate an ambiguous setback requirement in the City's commercial zones. Currently, the City may require an additional 50-foot setback[3], in addition to the rear yard setback requirement, where commercial uses abut residential properties. Because the CDC establishes no standard for when, or even if, this additional 50-foot buffer is required, staff recommended eliminating it and instead relying on the larger setback of either the residential or commercial zone.

Finally, to encourage a more continuous streetscape and vibrant pedestrian environment, staff recommended eliminating the requirement that 25 percent of the front setback area of commercial properties consist of landscaping.

Planning Commission's position: The Planning Commission agreed that it was appropriate to eliminate the lot depth requirement for lots larger than 10,000 square feet. For smaller lots, the Planning Commission was concerned that eliminating the depth of non-steeply sloped land requirement, may lead to undesirable lot arrangements.

Regarding the commercial setback, where these uses abut residential properties; the Planning Commission recommended clarifying when ("in order to mitigate adverse impacts") the additional 50-foot setback would be required (rather than eliminating it and relying on the underlying setback of the zoning district as staff recommended). The Planning Commission proposes the following text amendments:

R 40

08.070 DIMENSIONAL REQUIREMENTS, USES PERMITTED OUTRIGHT AND USES PERMITTED UNDER PRESCRIBED CONDITIONS

Except as may be otherwise provided by the provisions of this code, the following are the requirements for uses within this zone:

1. The minimum lot size shall be 40,000 square feet for a single-family detached unit.

[3] CDC 18.070(4)(d): "The minimum yard dimensions or minimum building setback area form the lot line shall be; for a rear yard, 25 feet. However, where the use abuts a residential district, the setback distance of the residential shall apply, and, in addition, a buffer of up to 50 feet may be required."

2. The minimum front lot line length or the minimum lot width at the front lot line shall be 150 feet.

3. The average minimum lot width shall be 150 feet.

~~*4. The lot depth comprising non-Type I or II lands shall be less than two and one-half times the width, and more than an average depth of 90 feet. (See diagram below.)*~~

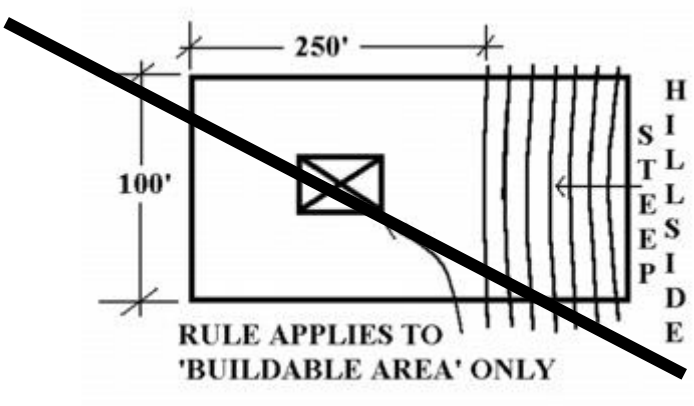

…

R20

09.070 DIMENSIONAL REQUIREMENTS, USES PERMITTED OUTRIGHT AND USES PERMITTED UNDER PRESCRIBED CONDITIONS

Except as may be otherwise provided by the provisions of this code, the following are the requirements for uses within this zone:

1. The minimum lot size shall be 20,000 square feet for a single-family detached unit.

2. The minimum front lot line length or the minimum lot width at the front lot line shall be 150 feet.

3. The average minimum lot width shall be 150 feet.

~~*4. The lot depth comprising non-Type I and II lands shall be less than two and one-half times the width, and more than an average depth of 90 feet. (See diagram below.)*~~

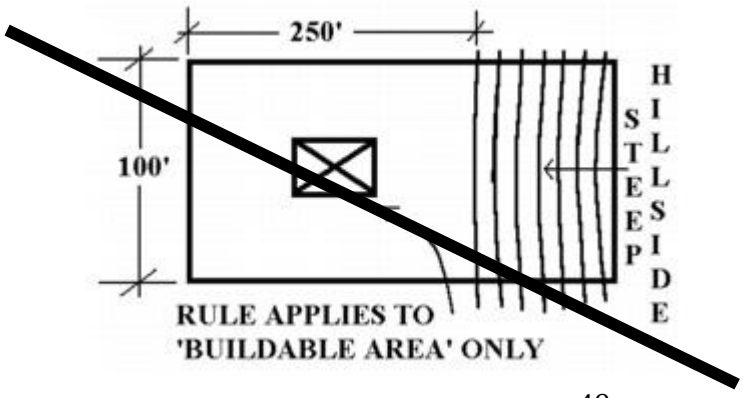

R15

10.070 DIMENSIONAL REQUIREMENTS, USES PERMITTED OUTRIGHT AND USES PERMITTED UNDER PRESCRIBED CONDITIONS

Except as may be otherwise provided by the provisions of this code, the following requirements are the requirements for uses within this zone:

1. The minimum lot size shall be 15,000 square feet for a single-family detached unit.

2. The minimum front lot line length or the minimum lot width at the front lot line shall be 45 feet.

3. The average minimum lot width shall be 80 feet.

~~*4. The lot depth comprising non-Type I and II lands shall be less than two and one-half times the width, and more than an average depth of 90 feet. (See diagram below.)*~~

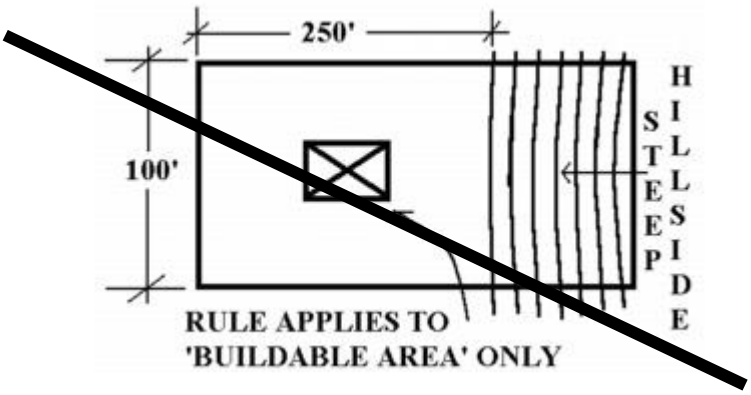

…

NEIGHBORHOOD COMMERCIAL, NC

18.070 DIMENSIONAL REQUIREMENTS, USES PERMITTED OUTRIGHT AND USES PERMITTED UNDER PRESCRIBED CONDITIONS

Except as may be otherwise provided by the provisions of this code, the following are the requirements for uses within this zone:

…

4. The minimum yard dimensions or minimum building setback area from the lot line shall be:

a. For a front yard, 25 feet.

b. For an interior side yard, seven and one-half feet.

c. For a side yard abutting a street, 15 feet.

d. For a rear yard, 25 feet. However, where the use abuts a residential district, the setback distance of the residential zone shall apply.~~, and, in addition, a buffer of up to 50 feet may be required.~~ In addition, in order to mitigate adverse impacts, a landscape buffer not to exceed 50 feet and which may include fencing or walls may be required.

GENERAL COMMERCIAL

19.070 DIMENSIONAL REQUIREMENTS, USES PERMITTED OUTRIGHT AND USES PERMITTED UNDER PRESCRIBED CONDITIONS

A. Except as may be otherwise provided by the provisions of this code, the following are the requirements for uses within this zone:

…

4. Where the use abuts a residential district, except as provided in CDC 58.090(C)(1), the setback distance of the residential zone shall apply. ~~For example, when the rear of a residential property abuts the side of a commercial property, the residential 20-foot setback shall apply to the commercial property. When the side of a residential property abuts the rear of a commercial property, the residential five- to seven-and-one-half-foot setback shall apply to the commercial property. In addition, a buffer of up to 50 feet may be required.~~ In addition, in order to mitigate adverse impacts, a landscape buffer not to exceed 50 feet and which may include fencing or walls may be required.

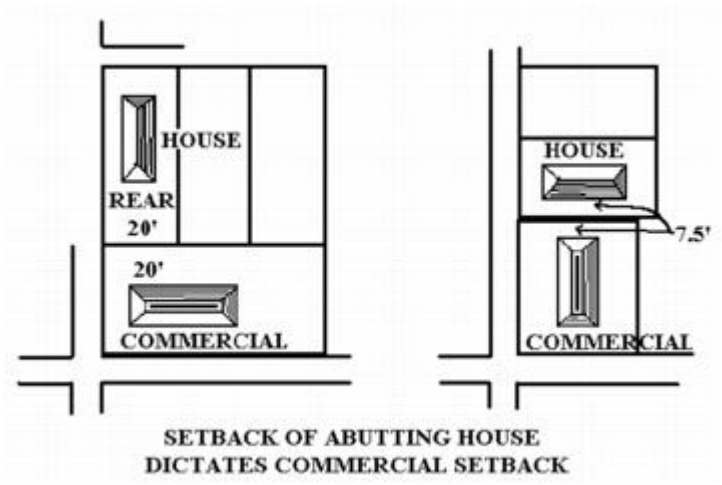

…

7. For lot lines that abut ~~an arterial,~~ streets with an expected average daily trip total of less than 18,000 vehicles there shall be no minimum yard dimensions or minimum building setback area. ~~, and~~ T~~t~~he maximum building setback shall be 20 feet. The front setback area

between the street and the building line shall consist of landscaping or a combination of non-vehicular hardscape areas (covered with impervious surfaces) and landscaped areas. If there are not street trees within the public right-of-way, the front setback area shall include such trees per the requirements of the City Arborist.

OFFICE BUSINESS CENTER

21.070 DIMENSIONAL REQUIREMENTS, USES PERMITTED OUTRIGHT AND USES PERMITTED UNDER PRESCRIBED CONDITIONS

A. Except as may be otherwise provided by the provisions of this code, the following are requirements for uses within this zone:

1. The minimum front lot line length or the minimum lot width at the front lot line shall be 35 feet.

2. The average minimum lot width shall be 35 feet.

~~3. The average minimum lot depth shall not be less than 90 feet.~~

4. The ~~minimum~~ yard dimensions or ~~minimum~~ building setback area from the lot line shall be:

a. ~~For an i~~Interior side yard, a minimum of seven and one-half feet.

b. ~~For a s~~Side yard abutting a street.~~,~~ No minimum~~ 15 feet~~.

c. ~~For a r~~Rear yard, a minimum of 25 feet~~; however, where the use abuts a residential district, the setback distance of the residential zone shall apply. and, in addition, a buffer of up to 50 feet may be required.~~. In addition, in order to mitigate adverse impacts, a landscape buffer not to exceed 50 feet and which may include fencing or walls may be required.

~~5.~~ d. For lot lines that abut ~~an arterial,~~ streets with an expected average daily trip total of less than 18,000 vehicles there shall be no minimum yard dimensions or minimum building setback area. ~~, and~~ T~~t~~he maximum building setback shall be 20 feet. The front setback area between the street and the building line shall consist of landscaping or a combination of non-vehicular hardscape areas (covered with impervious surfaces) and landscaped areas. If there are not street trees within the public right-of-way, the front setback area shall include such trees per the requirements of the City.

GENERAL INDUSTRIAL

23.070 DIMENSIONAL REQUIREMENTS, USES PERMITTED OUTRIGHT AND USES PERMITTED UNDER PRESCRIBED CONDITIONS

A. Except as may be otherwise provided by the provisions of this code, the following are requirements for uses within this zone:

…

~~3. The average minimum lot depth shall not be less than 90 feet.~~

4. Where the use abuts a residential district, the setback distance of the residential zone shall apply.~~, and, in addition, a buffer of up to 50 feet may be required.~~ In addition, in order to mitigate adverse impacts, a landscape buffer not to exceed 50 feet and which may include fencing or walls may be required.

Staff's position: Staff proposes eliminating the lot depth requirement in all residential zones (not just on larger lots as the PC recommends). Providing more flexibility in some lot dimensional standards will encourage more efficient use of land and will encourage better design. Because applicants must still adhere to frontage and average width as well as minimum lot area and all setback requirements, building spacing and density will be unaffected. Staff is confident that the market is the best mechanism for deciding the appropriateness of a flat rear yard given various other location and cost factors.

Similarly, many zoning districts (R7, R5, R4.5, R2.1) have a minimum average lot width that is larger than the minimum width required at the street frontage. Staff recommends that the minimum average width requirement be reduced to the frontage width to add more flexibility for subdivision design. Because the setback from properties on all sides of the lot will not change, and because the total lot area will not change, building spacing and density will be unaffected. This change would permit narrower and longer lots.

Staff recommends a minor change to the street-side setback for OBC zoned properties. Currently, the street-side setback is 15-feet, while the front of the building may be located on the front property line (no setback). To maintain the continuous streetscape feel with buildings located at the street, staff recommends eliminating the 15-foot street-side setback. This is consistent with urban design best practices from across the country and promotes a more vibrant commercial streetscape.

Similarly, to encourage a more continuous streetscape and vibrant pedestrian environment, staff recommends eliminating the requirement that 25 percent of the front setback area of commercial properties consist of landscaping. In this circumstance, the proximity of the commercial building to the sidewalk is more beneficial than private landscaping. Landscaping in the public right-of-way (street trees, planters, etc.) will provide the vegetative "softscape" necessary to beautify the City's commercial areas.

Also, Staff recommends removing the language that states that in commercial zones "a buffer of up to 50 feet may be required." This is completely arbitrary and unnecessary since there are already setback requirements for commercial properties.

Staff proposes the following text changes:

R 40

08.070 DIMENSIONAL REQUIREMENTS, USES PERMITTED OUTRIGHT AND USES PERMITTED UNDER PRESCRIBED CONDITIONS

Except as may be otherwise provided by the provisions of this code, the following are the requirements for uses within this zone:

1. The minimum lot size shall be 40,000 square feet for a single-family detached unit.

2. The minimum front lot line length or the minimum lot width at the front lot line shall be 150 feet.

3. The average minimum lot width shall be 150 feet.

~~*4. The lot depth comprising non-Type I or II lands shall be less than two and one-half times the width, and more than an average depth of 90 feet. (See diagram below.)*~~

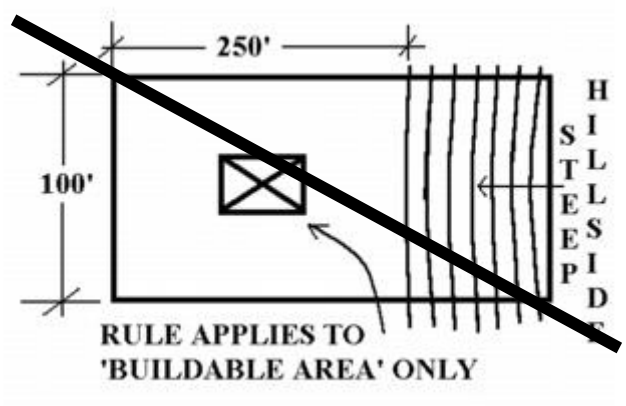

…

R20

09.070 DIMENSIONAL REQUIREMENTS, USES PERMITTED OUTRIGHT AND USES PERMITTED UNDER PRESCRIBED CONDITIONS

Except as may be otherwise provided by the provisions of this code, the following are the requirements for uses within this zone:

1. The minimum lot size shall be 20,000 square feet for a single-family detached unit.

2. The minimum front lot line length or the minimum lot width at the front lot line shall be 150 feet.

3. The average minimum lot width shall be 150 feet.

~~*4. The lot depth comprising non-Type I and II lands shall be less than two and one-half times the width, and more than an average depth of 90 feet. (See diagram below.)*~~

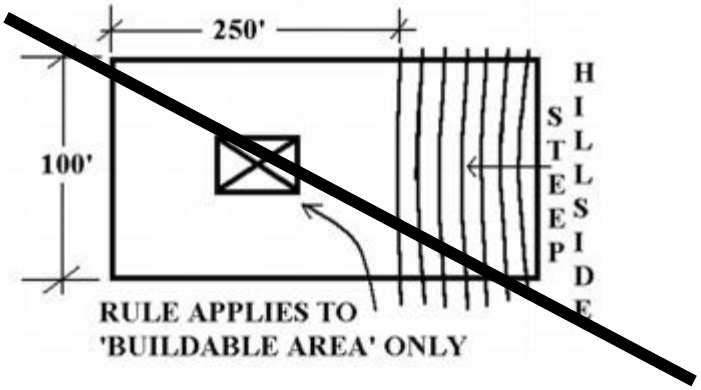

R15

10.070 DIMENSIONAL REQUIREMENTS, USES PERMITTED OUTRIGHT AND USES PERMITTED UNDER PRESCRIBED CONDITIONS

Except as may be otherwise provided by the provisions of this code, the following requirements are the requirements for uses within this zone:

1. The minimum lot size shall be 15,000 square feet for a single-family detached unit.

2. The minimum front lot line length or the minimum lot width at the front lot line shall be 45 feet.

3. The average minimum lot width shall be 80 feet.

~~*4. The lot depth comprising non-Type I and II lands shall be less than two and one-half times the width, and more than an average depth of 90 feet. (See diagram below.)*~~

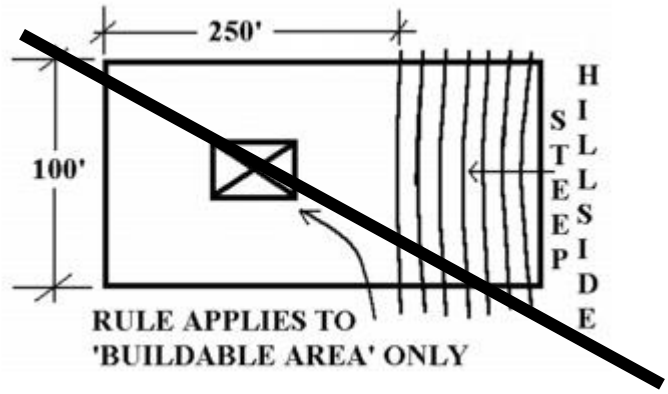

…

R10

11.070 DIMENSIONAL REQUIREMENTS, USES PERMITTED OUTRIGHT AND USES PERMITTED UNDER PRESCRIBED CONDITIONS

Except as may be otherwise provided by the provisions of this code, the following are the requirements for uses within this zone:

1. The minimum lot size shall be 10,000 square feet for a single-family detached unit.

2. The minimum front lot line length or the minimum lot width at the front lot line shall be 35 feet.

3. The average minimum lot width shall be 50 feet.

~~*4. The lot depth comprising non-Type I and II lands shall be less than two and one-half times the width, and more than an average depth of 90 feet. (See diagram below.)*~~

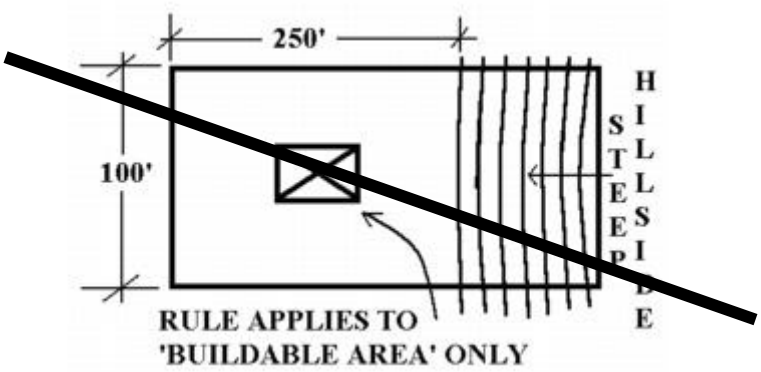

…

R7

12.070 DIMENSIONAL REQUIREMENTS, USES PERMITTED OUTRIGHT AND USES PERMITTED UNDER PRESCRIBED CONDITIONS

Except as may be otherwise provided by the provisions of this code, the following are the requirements for uses within this zone:

A. The minimum lot size shall be:

1. For a single-family detached unit, 7,000 square feet.

2. For each attached single-family unit, 5,500 square feet. No yard shall be required between the units.

B. The minimum front lot line length or the minimum lot width at the front lot line shall be 35 feet.

C. The average minimum lot width shall be ~~50~~ 35 feet.

~~*D. The lot depth comprising non-Type I and II lands shall be less than two and one-half times the width and more than an average depth of 90 feet. (See diagram below.)*~~

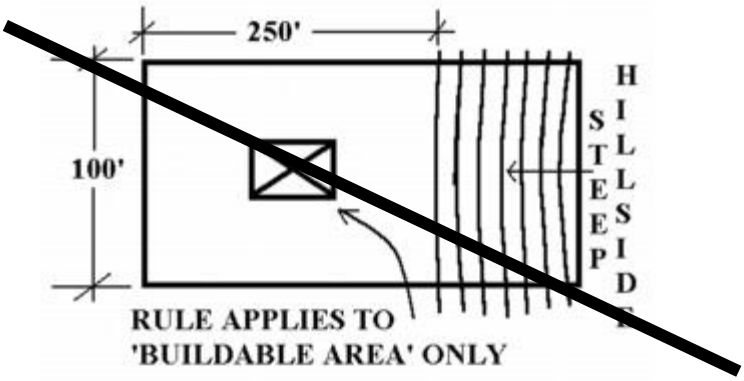

…

R5

13.070 DIMENSIONAL REQUIREMENTS, USES PERMITTED OUTRIGHT AND USES PERMITTED UNDER PRESCRIBED CONDITIONS

Except as may be otherwise provided by the provisions of this code, the following are the requirements for uses within this zone:

A. The minimum lot size shall be:

1. For a single-family detached unit, 5,000 square feet.

2. For each attached single-family unit, 4,500 square feet. No yard shall be required between the units.

B. The minimum front lot line length, or the minimum lot width at the front lot line, shall be 35 feet.

C. The average minimum lot width shall be ~~50~~ 35 feet.

~~*D. The minimum average lot depth comprising non-Type I and II lands shall be 90 feet. (See diagram below.)*~~

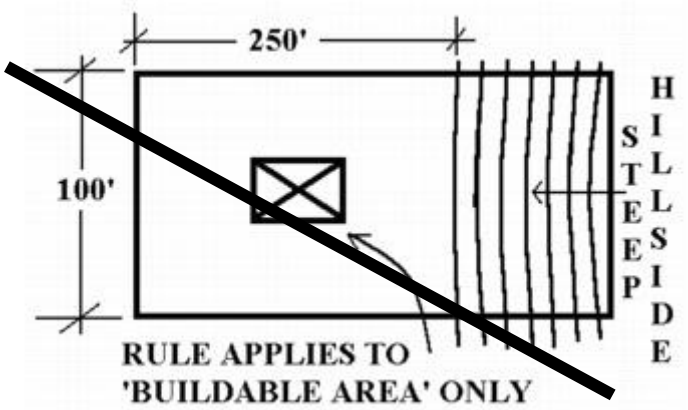

…

R4.5

14.070 DIMENSIONAL REQUIREMENTS, USES PERMITTED OUTRIGHT AND USES PERMITTED UNDER PRESCRIBED CONDITIONS

Except as may be otherwise provided by the provisions of this code, the following are the requirements for uses within this zone:

A. The minimum lot size shall be:

1. For a single-family detached unit, 4,500 square feet.

2. For each attached single-family unit, 4,000 square feet.

3. For a duplex, 8,000 square feet or 4,000 square feet for each unit.

B. The minimum front lot line length or the minimum lot width at the front lot line shall be 35 feet.

C. The average minimum lot width shall be ~~50~~ 35 feet.

~~D. The minimum average lot depth shall be 90 feet.~~

…

R3

15.070 DIMENSIONAL REQUIREMENTS, USES PERMITTED OUTRIGHT AND USES PERMITTED UNDER PRESCRIBED CONDITIONS

Except as may be otherwise provided by the provisions of this code, the following are requirements for uses within this zone:

A. The minimum lot size shall be:

1. For a single-family detached unit, 3,000 square feet.

2. For each attached single-family unit, 3,000 square feet.

3. For each multiple-family dwelling unit, 3,000 square feet.

B. The minimum front lot line length or the minimum lot width at the front lot line shall be 35 feet.

~~C. The minimum average lot depth shall be 75 feet.~~

R2.1

16.070 DIMENSIONAL REQUIREMENTS, USES PERMITTED OUTRIGHT AND USES PERMITTED UNDER PRESCRIBED CONDITIONS

Except as may be otherwise provided by the provisions of this code, the following are requirements for uses within this zone:

…

C. The average minimum lot width shall be ~~50~~ 35 feet.

NEIGHBORHOOD COMMERCIAL, NC

18.070 DIMENSIONAL REQUIREMENTS, USES PERMITTED OUTRIGHT AND USES PERMITTED UNDER PRESCRIBED CONDITIONS

Except as may be otherwise provided by the provisions of this code, the following are the requirements for uses within this zone:

…2. The average minimum lot width shall be ~~50~~ 35 feet.

~~3. The average minimum lot depth shall not be less than 90 feet.~~

4. The minimum yard dimensions or minimum building setback area from the lot line shall be:

a. For a front yard, 25 feet.

b. For an interior side yard, seven and one-half feet.

c. For a side yard abutting a street, 15 feet.

d. For a rear yard, 25 feet. However, where the use abuts a residential district, the setback distance of the residential zone shall apply.~~, and, in addition, a buffer of up to 50 feet may be required.~~.

GENERAL COMMERCIAL

19.070 DIMENSIONAL REQUIREMENTS, USES PERMITTED OUTRIGHT AND USES PERMITTED UNDER PRESCRIBED CONDITIONS

A. Except as may be otherwise provided by the provisions of this code, the following are the requirements for uses within this zone:

…

4. Where the use abuts a residential district, except as provided in CDC 58.090(C)(1), the setback distance of the residential zone shall apply. ~~For example, when the rear of a residential property abuts the side of a commercial property, the residential 20-foot setback shall apply to the commercial property. When the side of a residential property abuts the rear of a commercial property, the residential five- to seven-and-one-half-foot setback shall apply to the commercial property. In addition, a buffer of up to 50 feet may be required.~~

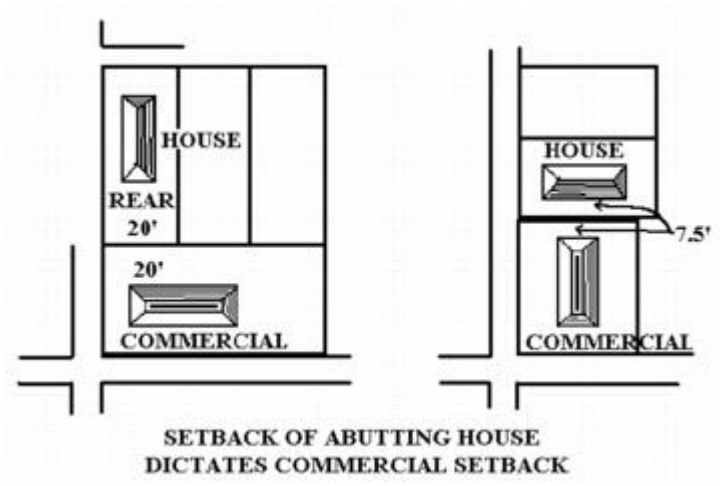

…

7. For lot lines that abut an arterial, there shall be no minimum yard dimensions or minimum building setback area, and the maximum building setback shall be 20 feet. The front setback area between the street and the building line shall consist of landscaping or a combination of non-vehicular hardscape areas (covered with impervious surfaces) and landscaped areas~~, with at least 25 percent of the front setback area consisting of landscaped areas.~~. If there are not street trees within the public right-of-way, the front setback area shall include such trees per the requirements of the City Arborist.

~~8. For lot lines that abut streets with an expected average daily trip total of more than 18,000 vehicles, a minimum of 20 feet.~~

OFFICE BUSINESS CENTER

21.070 DIMENSIONAL REQUIREMENTS, USES PERMITTED OUTRIGHT AND USES PERMITTED UNDER PRESCRIBED CONDITIONS

A. Except as may be otherwise provided by the provisions of this code, the following are requirements for uses within this zone:

1. The minimum front lot line length or the minimum lot width at the front lot line shall be 35 feet.

2. The average minimum lot width shall be 35 feet.

~~3. The average minimum lot depth shall not be less than 90 feet.~~

4. The ~~minimum~~ yard dimensions or ~~minimum~~ building setback area from the lot line shall be:

a. ~~For an i~~Interior side yard, a minimum of seven and one-half feet.

b. ~~For a s~~Side yard abutting a street.~~,~~ no minimum ~~15 feet~~.

c. ~~For a r~~Rear yard, a minimum of 25 feet.~~; however, where the use abuts a residential district, the setback distance of the residential zone shall apply. and, in addition, a buffer of up to 50 feet may be required.~~.

…

~~5. For lot lines that abut an arterial, there shall be no minimum yard dimensions or minimum building setback area,, and the maximum building setback shall be 20 feet.~~ d. Front yard, no minimum and a 20-foot maximum. The front setback area between the street and the building line shall consist of landscaping or a combination of non-vehicular hardscape areas (covered with impervious surfaces) and landscaped areas. If there are not street trees within the public right-of-way, the front setback area shall include such trees per the requirements of the City Arborist.

…

~~e. For lot lines that abut streets with an expected average daily trip total of more than 18,000 vehicles, a minimum of 20 feet.~~

CAMPUS INDUSTRIAL

22.070 DIMENSIONAL REQUIREMENTS FOR USES PERMITTED OUTRIGHT AND USES PERMITTED UNDER PRESCRIBED CONDITIONS

...

~~L. Corner vision. No sight-obscuring structures or plantings exceeding 30 inches in height shall be located within a 20-foot radius of the lot corner nearest the intersection of two public roads, or from the intersection of a private driveway or easement and a public road. Trees located within a 20-foot radius of any such intersection shall be maintained to allow 10 feet of visual clearance below the lowest hanging branches.~~

~~M. Exceptions to dimensional requirements. The requirements for lot coverage, perimeter setback, street frontage and corner vision may be modified in the design review process pursuant to staff review with notice under CDC 99.080. Approval shall not be granted unless:~~

~~1. The criteria under Chapter 75 CDC for variances are satisfied; and~~

~~2. The purposes set forth under subsection A of this section are addressed and satisfied in the proposed design of the development.~~

GENERAL INDUSTRIAL

23.070 DIMENSIONAL REQUIREMENTS, USES PERMITTED OUTRIGHT AND USES PERMITTED UNDER PRESCRIBED CONDITIONS

A. Except as may be otherwise provided by the provisions of this code, the following are requirements for uses within this zone:

1. The minimum front lot line length of the minimum lot width at the front lot line shall be 50 feet.

2. The average minimum lot width shall be 50 feet.

~~3. The average minimum lot depth shall not be less than 90 feet.~~

4. Where the use abuts a residential district, the setback distance of the residential zone shall apply.~~, and, in addition, a buffer of up to 50 feet may be required.~~

BACK TO TOP

Issue No. 16: Allow adjacent on-street parking to count toward the required minimum parking total. Also, revise parking standards for consistency with the Regional Transportation Plan. Parking for commercial uses consumes a large percentage of commercial land. The CDC currently does not allow on-street parking to count toward the required minimum for adjacent commercial uses. Allowing adjacent on-street parking to count toward commercial parking requirements will make more commercial land available for productive purposes (more leasable square footage).

Based on the failure of many businesses to successfully navigate the joint parking requirements in our Code, Staff also recommended clarifying the process and standards for establishing a joint/shared parking agreement between multiple commercial property owners as another means to enhance the value of properties and to promote more efficient use of commercial lands.

Planning Commission's position: The Planning Commission recommends revising the minimum parking requirements, for various uses, to satisfy the standards in the Regional Transportation Plan but does not agree with the use of on-street parking to supplement commercial parking needs. The Planning Commission is concerned that parking is currently undersupplied in many of the City's commercial areas and that allowing on-street parking to count toward minimum parking would only worsen the situation. The Planning Commission proposes the following text edits:

46.010 PURPOSE

The purpose of this chapter is to provide standards for the number and arrangement of ~~off-street~~ parking, loading, and reservoir areas. Most of these provisions relate to commercial, office, and industrial uses. Parking lot design has often been criticized for creating large expanses of paved areas, separating the business from the public street. That arrangement makes it less attractive for pedestrians to access these buildings. The challenge is balancing the business community's desire for ample visible parking to attract prospective customers with the community interest of encouraging safe, non-vehicular access, minimizing the visual impact of parking, and creating a more attractive streetscape and urban environment.

46.020 APPLICABILITY AND GENERAL PROVISIONS

A. At the time a structure is erected or enlarged, or the use of a structure or parcel of land is changed within any zone, ~~off-street~~ parking spaces, loading areas and reservoir areas shall be provided in accordance with the requirements of this chapter unless other requirements are otherwise established as a part of the development approval process.

B. The provision and maintenance of off-street parking and loading spaces are the continuing obligation of the property owner.

C. No building or other permit shall be issued until plans are approved that show the property that is and will remain available for exclusive use as off-street parking and loading space as required by this chapter.~~ The use of property for which the building permit is issued shall be conditional upon the unqualified continuance and availability of the amount of parking and loading space required by this chapter.~~

D. Required parking spaces and loading areas shall be improved to the standards contained in this chapter and shall be available for use at the time of the final building inspection except as provided in CDC 46.150. (Ord. 1463, 2000)

...

46.050 JOINT USE OF A PARKING AREA

~~A. Owners of two or more uses, structures, or parcels of land may agree to utilize jointly the same parking and loading spaces when the hours of operation of the proposed uses do not overlap, and a finding can be made that parking can be accommodated for all uses provided that satisfactory legal evidence is presented to the City in the form of deeds, leases, and/or contracts to establish the joint use. The applicant shall agree to pay all reasonable legal costs incurred by the City for review.~~Joint use of required parking spaces may occur where two or more uses on the same or separate sites are able to share the same parking spaces because their parking demands occur at different times. Joint use of required parking spaces is allowed if the following documentation is submitted in writing to the Planning Director as part of a building or zoning permit application or land use review:

The names and addresses of the owners or tenants that are sharing the parking and the uses at those locations;

The location and number of parking spaces that are being shared;

An analysis showing that the peak parking times of the uses occur at different times and that the parking area will be large enough for the anticipated demands of both uses; and

A legal instrument such as an easement or deed restriction that guarantees access to the parking for all uses.

B. If a joint use arrangement is subsequently terminated, the requirements of this chapter will ~~thereafter~~ apply to each use separately. (Ord. 1547, 2007)

...

46.080 COMPUTATION OF REQUIRED PARKING SPACES AND LOADING AREA

A. Where several uses occupy a single structure or parcel of land, ~~or~~ a combination of uses are included in one business, or a combination of uses in the same or separate buildings share a common

parking area as in the case of a shopping center, the total off-street parking spaces and loading area shall be the sum of the requirements of the several uses, computed separately. For example, parking for an auto sales and repair business would be calculated using the "retail-bulky" calculation for the sales area and the "service and repair" calculation for the repair area. In another example, parking for a shopping center with a grocery store, a restaurant, and a medical office would be calculated using the "general retail store" calculation for the grocery store, the "restaurant" calculation for the restaurant, and the "medical/dental clinics" calculation for the medical office. The total number of required parking spaces may be reduced by up to 10 percent to account for cross-patronage (when a customer visits several commercial establishments during one visit to the commercial center) of adjacent businesses or services in a commercial center with five or more separate commercial establishments.

…

E. Parking spaces in the public street shall not be eligible as fulfilling any part of the parking requirement except open space/park areas with adjacent street frontage.

46.090 MINIMUM ~~OFF-STREET~~ PARKING SPACE REQUIREMENTS

A. Residential parking space requirements.

1	*Single-family residences (attached or detached).*	*1 off-street space for each dwelling unit; may or may not be in garage or carport.*
2	*Two-family residences and duplexes.*	*1 off-street space for each dwelling unit; may or may not be in garage or carport. ~~Same as single-family.~~*
3	*Multi-family residences:*	
a.	*500 square feet or less.*	*1 off-street space for each unit.*
b.	*1 bedroom apartment.*	*1.25 off-street spaces for each unit. Stacking one car behind the other is permitted only when the parking spaces are allocated to specific apartments.*
c.	*2 bedroom apartments.*	*1.5 off-street spaces for each dwelling unit. Stacking one car behind the other is permitted only when the parking spaces are allocated to specific apartments.*

	d.	*3 (or more) bedroom Apartment.*	*1.75 off-street spaces for each dwelling unit. Stacking one car behind the other is permitted only when the parking spaces are allocated to specific apartments.*
	e.	*Visitor parking for multi-family residences.*	*1 off-street space for every 3 apartment units evenly distributed throughout the complex. These spaces shall be clearly identified and signed as visitor spaces only. This number may be reduced by 1 space for every 18 feet of project abutting public street frontage where on-street parking is allowed.*
4		*Residential hotel, rooming and boarding houses.*	*~~80 percent of the guest rooms or suites shall have 1 space each plus 1 space for each 2 employees.~~1 parking space per 1,000 square feet of gross leasable area.*
5		*Correction institutions.*	*1 space for each 3 beds or patients, plus 1 space for each 2 employees.*
6		*Manufactured/mobile home.*	*Same as single-family.*
7		*Adult foster care, residential care facility, assisted living facility.*	*One off-street space for each 3 units plus 1 space for each employee working during the time period with the greatest number of employees on site.*
B.	*Public and semi-public buildings/uses.*		
...	*11*	*Active parks, playgrounds.*	*Two to 5 spaces for each acre of active use area other than athletic fields.~~ If the park is abutting the street with no intervening homes or land uses, and has at least 300 lineal feet of street frontage where on-street parking is allowed, on-street parking may reduce the amount of required off-street parking by up to one-half.~~*
12		*Athletic field (baseball, soccer, etc.).*	*40 spaces per athletic field.~~ If the park has at least 300 lineal feet of street frontage where parking is allowed, on-street parking may reduce the amount of required off-street parking by up to one-half.~~*

13	*Boat ramp.*	*40 spaces per launch ramp (50 percent at 9' X 20'; 50 percent at 10' X 40' marked "trailers only").*
14	*Senior center.*	*One space per 150 square feet and drop-off facility per CDC 46.120.*
15	*Trailhead.*	*Four spaces (includes one handicapped space).*

~~a. On-street parking may substitute for the required off-street parking provided it is contained within the roadway frontage of trail land area; and~~

~~b. Vehicles must be able to approach and leave the trailhead parking area in both directions of travel without having to use driveways as turnaround areas.~~

C. Commercial.

…

5	*Professional offices, banks and savings and loans, and government offices.*	*One space for every ~~350~~ 370 sq. ft. of gross area.*

F. Maximum parking. ~~While it is important to establish minimum standards to ensure that adequate parking is available, it is equally important to establish maximum parking standards to reduce paved impermeable areas, to reduce visual impact of parking lots, and to encourage alternate modes of transportation. For these reasons, p~~Parking spaces (except for single-family and two-family residential uses) shall not exceed the minimum required number of spaces by more than 10 percent. ~~except by variance.~~

...

46.150 DESIGN AND STANDARDS

The following standards apply to the design and improvement of areas used for vehicle parking, storage, loading, and circulation:

A. Design standards.

1. "One standard parking space" means a minimum for a parking stall of eight feet in width and 16 feet in length. These stalls shall be identified as "compact." To accommodate larger cars, 50 percent of the required parking spaces shall have a minimum dimension of nine feet in width and 18 feet in length (nine feet by 18 feet). When multi-family parking stalls back onto a main driveway, the stalls shall be nine feet by 20 feet.

2. Disabled parking and maneuvering spaces shall be consistent with current federal dimensional standards and subsection B of this section and placed nearest to accessible building entryways and ramps.

~~*3. Parking spaces located in the public right-of-way that require backing movements or other maneuvering within a street or right-of-way are permitted with City Engineer approval as is in the case of Willamette Falls Drive parking facilities.*~~

4. Service drives shall be designed and constructed to facilitate the flow of traffic, provide maximum safety of traffic access and egress, and maximum safety of pedestrians and vehicular traffic on the site.

5. Each parking and/or loading space shall have clear access, whereby the relocation of other vehicles to utilize the parking space is not required.

...

11. Parking spaces along the boundaries of a parking lot or adjacent to interior landscaped areas or sidewalks shall be provided with a wheel stop at least four inches high located two feet back from the front of the parking stall. Such parking spaces may be provided without wheel stops if the sidewalks or landscaped areas adjacent the parking stalls are two feet wider than the minimum width. ~~*Alternately, landscaped areas or sidewalks adjacent to the parking stalls without wheel stops shall be two feet wider.*~~

…

14. Directional arrows and traffic control devices which are placed on parking lots shall be identified ~~*and installed*~~*.*

Staff's position: Staff proposes to allow the use of adjacent on-street parking, subject to approval by the City, to be eligible for obtaining the minimum required parking for commercial uses. Staff would recommend the following additional change to CDC Section 46.080(E):

…

E. On-street parking along the immediate property frontage(s) may be counted toward the minimum parking requirement with approval from the City Engineer. ~~*Parking spaces in the public street shall not be eligible as fulfilling any part of the parking requirement except open space/park areas with adjacent street frontage.*~~

BACK TO TOP

Issue No. 17: Permit residents to own and maintain egg-laying chickens at their place of residence. This action would codify the City's unofficial policy of permitting chickens, subject to certain standards, within City limits. The policy the City has been using and applying is not consistent with the WLMC or the CDC. Based on reviews of other City's ordinances, Staff is recommending that no permit be required, but that standards be established and enforced through the Nuisance chapter of the Municipal Code (similar to regulations for dogs in the City).

Currently, the CDC permits poultry and livestock on residential properties greater than 20,000 square feet (1 acre minimum lot size for poultry), as long as the animals are located no closer than 100-feet from an adjacent residence. Approximately five years ago, the Planning Director (relying on the exemption for household pets) issued an interpretation of the City's zoning ordinance permitting residents to have egg-laying chickens under certain conditions (no roosters, no more than 5 hens, setback from adjacent properties, etc.). Since then, the City's legal counsel advised against the use of this code interpretation due to its contradiction to the adopted ordinance.

Staff recommends revising this language to allow egg-laying chickens in certain circumstances (generally consistent with previous Planning Director interpretation) following repeated requests from the public and because of the absence of any substantial complaint history that would establish this as an incompatible use in a residential setting.

Planning Commission's position: The Planning Commission does not recommend expanding the City's policy regarding permitting chickens to be kept at in the City. The Planning Commission proposes to maintain the one-acre minimum lot size requirement for hosting domestic chickens. They do propose the following minor language changes:

CDC

08.050 USES AND DEVELOPMENT PERMITTED UNDER PRESCRIBED CONDITIONS

The following uses are allowed in this zone under prescribed conditions.

…

4. Agricultural or horticultural use; provided, that no retail or wholesale business sales office is maintained on the premises; and provided, ~~that poultry or livestock, other than normal household pets~~ that domestic chickens shall not be permitted within 100 feet of any residence other than a dwelling on the same lot, nor on a lot of less than one acre, or which has less than 20,000 feet per head of livestock. Subject to the nuisance provisions found in Section 5.400 et. seq. of the West Linn Municipal Code.

09.050 USES AND DEVELOPMENT PERMITTED UNDER PRESCRIBED CONDITIONS

The following uses are allowed in this zone under prescribed conditions.

…

4. Agricultural or horticultural use; provided, that no retail or wholesale business sales office is maintained on the premises; and provided, that poultry or livestock, other than normal household pets shall not be permitted within 100 feet of any residence other than a dwelling on the same lot, nor on a lot of less than one acre, or which has less than 20,000 feet per head of livestock. Subject to the nuisance provisions found in Section 5.400 et. seq. of the West Linn Municipal Code.

10.050 USES AND DEVELOPMENT PERMITTED UNDER PRESCRIBED CONDITIONS

The following uses are allowed in this zone under prescribed conditions.

…

4. Agricultural or horticultural use; provided, that no retail or wholesale business sales office is maintained on the premises; and provided, that poultry or livestock, other than normal household pets shall not be permitted within 100 feet of any residence other than a dwelling on the same lot, nor on a lot of less than one acre, or which has less than 20,000 feet per head of livestock. Subject to the nuisance provisions found in Section 5.400 et. seq. of the West Linn Municipal Code.

11.050 USES AND DEVELOPMENT PERMITTED UNDER PRESCRIBED CONDITIONS

The following uses are allowed in this zone under prescribed conditions.

…

5. Agricultural or horticultural use; provided, that no retail or wholesale business sales office is maintained on the premises; and provided, that poultry or livestock, other than normal household pets shall not be permitted within 100 feet of any residence other than a dwelling on the same lot, nor on a lot of less than one acre, or which has less than 20,000 feet per head of livestock. Subject to the nuisance provisions found in Section 5.400 et. seq. of the West Linn Municipal Code.

12.050 USES AND DEVELOPMENT PERMITTED UNDER PRESCRIBED CONDITIONS

The following uses are allowed in this zone under prescribed conditions.

…

5. Agricultural or horticultural use; provided, that no retail or wholesale business sales office is maintained on the premises; and provided, that poultry or livestock, other than normal household pets shall not be permitted within 100 feet of any residence other than a dwelling on the same lot, nor on a lot of less than one acre, or which has less than 20,000 feet per head of livestock. Subject to the nuisance provisions found in Section 5.400 et. seq. of the West Linn Municipal Code.

13.050 USES AND DEVELOPMENT PERMITTED UNDER PRESCRIBED CONDITIONS

The following uses are allowed in this zone under prescribed conditions.

…

7. Agricultural or horticultural use; provided, that no retail or wholesale business sales office is maintained on the premises; and provided, that poultry or livestock, other than normal household pets shall not be permitted within 100 feet of any residence other than a dwelling on the same lot, nor on a lot of less than one acre, or which has less than 20,000 feet per head of livestock. Subject to the nuisance provisions found in Section 5.400 et. seq. of the West Linn Municipal Code.

Staff's position: Staff recommends that the West Linn Municipal Code (Chapter 5) be amended to recognize domestic chickens as a distinct class from poultry and livestock. Staff further recommends that a new section, with explicit guidelines for the keeping of domestic chickens be added to the Municipal Code (Section 5.415) to improve clarity around this issue. Staff recommends the following:

5.400 Definitions.

…

Poultry or livestock: alpacas, burros, cattle, emu, fowl, horses, hogs, goats, jennies, jackasses, llamas, mules, ostriches, sheep, and any other farm animal, excluding dogs, cats, and domestic chickens.

..

5.415 Livestock and Poultry.

(1) Unless specifically permitted by the WLMC or CDC under prescribed conditions, no person shall keep or maintain livestock or poultry within the City. No person may maintain a pigsty, slaughterhouse or tannery, or permit livestock or poultry owned by him to run at large within the City. ~~This section shall not apply to cats, dogs or other household pets.~~

5.416 Domestic Chickens

(a) Purpose. The following regulations will govern the keeping of domestic chickens and are designed to prevent nuisance conditions that are unsanitary or unsafe.

(b) Domestic chickens are allowed subject to the following restrictions:

(1) No more than five domestic chickens are allowed for each single-family residence.

(2) No roosters shall be allowed.

(3) Domestic chickens shall be kept in a secure enclosure at night.

(4) Enclosures shall be covered, predator-resistant, well-ventilated, and provide a minimum of 2 square feet per domesticat chicken.

(5) Enclosures must be located at least 20 feet from all neighboring residences.

(6) Enclosures must be kept in a clean, dry, and sanitary condition at all times, and must be cleaned on a regular basis to prevent offensive odors.

CDC

08.050 USES AND DEVELOPMENT PERMITTED UNDER PRESCRIBED CONDITIONS

The following uses are allowed in this zone under prescribed conditions.

…

4. Agricultural or horticultural use; provided, that no retail or wholesale business sales office is maintained on the premises; and provided, that poultry or livestock~~, other than normal household pets,~~ shall not be permitted within 100 feet of any residence other than a dwelling on the same lot, nor on a lot of less than one acre, or which has less than 20,000 feet per head of livestock. These uses are subject ~~Subject~~ to the nuisance provisions found in Section 5.400 et. seq. of the West Linn Municipal Code.

09.050 USES AND DEVELOPMENT PERMITTED UNDER PRESCRIBED CONDITIONS

The following uses are allowed in this zone under prescribed conditions.

…

4. Agricultural or horticultural use; provided, that no retail or wholesale business sales office is maintained on the premises; and provided, that poultry or livestock~~, other than normal household pets,~~ shall not be permitted within 100 feet of any residence other than a dwelling on the same lot, nor on a lot of less than one acre, or which has less than 20,000 feet per head of livestock. These uses are subject ~~Subject~~ to the nuisance provisions found in Section 5.400 et. seq. of the West Linn Municipal Code.

10.050 USES AND DEVELOPMENT PERMITTED UNDER PRESCRIBED CONDITIONS

The following uses are allowed in this zone under prescribed conditions.

…

4. Agricultural or horticultural use; provided, that no retail or wholesale business sales office is maintained on the premises; and provided, that poultry or livestock~~, other than normal household pets,~~ shall not be permitted within 100 feet of any residence other than a dwelling on the same lot, nor on a lot of less than one acre, or which has less than 20,000 feet per head of livestock. These uses are subject ~~Subject~~ to the nuisance provisions found in Section 5.400 et. seq. of the West Linn Municipal Code.

11.050 USES AND DEVELOPMENT PERMITTED UNDER PRESCRIBED CONDITIONS

The following uses are allowed in this zone under prescribed conditions.

…

5. Agricultural or horticultural use; provided, that no retail or wholesale business sales office is maintained on the premises; and provided, that poultry or livestock~~, other than normal household~~

~~pets,~~ shall not be permitted within 100 feet of any residence other than a dwelling on the same lot, nor on a lot of less than one acre, or which has less than 20,000 feet per head of livestock. These uses are subject ~~Subject~~ to the nuisance provisions found in Section 5.400 et. seq. of the West Linn Municipal Code.

12.050 USES AND DEVELOPMENT PERMITTED UNDER PRESCRIBED CONDITIONS

The following uses are allowed in this zone under prescribed conditions.

…

5. Agricultural or horticultural use; provided, that no retail or wholesale business sales office is maintained on the premises; and provided, that poultry or livestock~~, other than normal household pets,~~ shall not be permitted within 100 feet of any residence other than a dwelling on the same lot, nor on a lot of less than one acre, or which has less than 20,000 feet per head of livestock. These uses are subject ~~Subject~~ to the nuisance provisions found in Section 5.400 et. seq. of the West Linn Municipal Code.

13.050 USES AND DEVELOPMENT PERMITTED UNDER PRESCRIBED CONDITIONS

The following uses are allowed in this zone under prescribed conditions.

…

7. Agricultural or horticultural use; provided, that no retail or wholesale business sales office is maintained on the premises; and provided, that poultry or livestock~~, other than normal household pets,~~ shall not be permitted within 100 feet of any residence other than a dwelling on the same lot, nor on a lot of less than one acre, or which has less than 20,000 feet per head of livestock. These uses are subject ~~Subject~~ to the nuisance provisions found in Section 5.400 et. seq. of the West Linn Municipal Code.

BACK TO TOP

Issue No. 18: Permit outdoor seating for commercial uses to extend beyond the storefront with permission from the adjacent property owner. Staff has determined that the City could allow this as a practice at the permitting stage and that no CDC modification is necessary.

BACK TO TOP

Issue No. 19: Repeal Chapter 31 (Erosion Control) and 33 (Stormwater Quality and Detention) in their entirety. The changes proposed under this section include a number of house-keeping items that reduce redundancy and reflect current review and approval practices. Staff originally recommended that Chapter 31 and 33 be removed from the CDC because these same standards are applied during the building permit phase; when developers have a better idea of where buildings and other facilities will be located on-site and within a subdivision. Changes are also proposed to the submittal requirements in Chapter 55 that recognize that while detailed stormwater plans are not required at the plan review stage, it is still necessary to understand the general size and location of these facilities.

Staff also recommends changing the term "transient lodging" to "hotel/motel" as the latter is the more commonly understood nomenclature.

Planning Commission and Staff concur with these changes:

Chapter 02 DEFINITIONS

…

~~Transient lodgings~~ Hotel/Motel. Establishments primarily engaged in the provision of lodging ~~services~~ on a temporary basis with incidental food, drink, and other sales and services intended for the convenience of guests. Typical uses include hotels, motels, or bed and breakfast houses.

~~Chapter 33~~
~~STORMWATER QUALITY AND DETENTION~~

~~Sections:~~

~~33.010 PURPOSE~~

~~33.020 APPLICABILITY~~

~~33.030 APPLICATION~~

~~33.040 APPROVAL CRITERIA~~

~~33.050 SITE PLAN~~

~~33.060 MAINTENANCE AND ACCESS REQUIREMENTS~~

~~33.070 PLANT MATERIAL FOR WATER QUALITY FACILITIES~~

~~*33.010 PURPOSE*~~

~~*The purpose of this chapter is to implement the Comprehensive Plan; meet the objectives of the "Clean Water Act" of the federal government by restoring and maintaining the chemical, physical, and biological integrity of waterbodies and waterways; provide water purification, flood control and streambank stability; provide aesthetic value; and provide for stormwater management to reduce the impacts of stormwater runoff (water quantity) and pollution (water quality) resulting from development. As development results in the replacement of large areas of existing pervious surface cover such as meadows or wooded areas with impervious material such as roads, parking lots, and roofs, stormwater detention is necessary to ensure that post-development stormwater runoff volumes do not exceed pre-development runoff volumes. Stormwater treatment is necessary in order to reduce sediment, nutrient, and pollutant loading into waterbodies and waterways. (Ord. 1463, 2000)*~~

~~*33.020 APPLICABILITY*~~

~~*This chapter applies to all new development and redevelopment sites, as required by the City's Public Works Design Standards, except one- and two-family dwellings that do not involve a land division. (Ord. 1463, 2000)*~~

~~*33.030 APPLICATION*~~

~~*In conjunction with a design review or land division application, the following materials shall be submitted:*~~

~~*A. An application submittal shall include the completed application form and three copies of responses to the approval criteria, except for any plans which shall include three copies at the original scale and three copies reduced to a paper size not greater than 11 inches by 17 inches.*~~

~~*B. A site plan and topographic map consistent with CDC 33.050 shall be submitted with the application.*~~

~~*C. The design details of the stormwater detention and treatment facilities shall be submitted per the standards set forth in the Public Works Design Standards. The application submittal shall include an operation and maintenance plan per the standards set forth in the Public Works Design Standards.*~~

~~*D. The application submittal shall include a planting plan consistent with CDC 33.070. (Ord. 1463, 2000)*~~

~~*33.040 APPROVAL CRITERIA*~~

~~*The Planning Director and City Engineer shall make written findings with respect to the following criteria when approving, approving with conditions, or denying applications for stormwater detention permits and stormwater quality permits.*~~

~~*A. Stormwater quality facilities shall meet non-point source pollution control standards required by the Public Works Design Standards.*~~

~~*B. Design of stormwater detention and pollution reduction facilities and related detention and water quality calculations shall meet Public Works Design Standards and shall be prepared by a professional engineer licensed to practice in the State of Oregon.*~~

~~*C. Soil stabilization techniques, erosion control, and adequate improvements to accommodate the intended drainage through the drainage basin shall be used. Storm drainage shall not be diverted from its natural watercourse unless no feasible alternatives exist. Interbasin transfers of storm drainage will not be permitted.*~~

~~*D. Stormwater detention and treatment facilities shall encroach no further than 25 feet into the outside boundary of a water quality resource area. The area of encroachment must be replaced by adding an equal area to the water quality resource area on the subject property.*~~

~~*E. Stormwater detention and treatment facilities shall be vegetated with plants from the Metro's Native Plant List as described in CDC 33.070.*~~

~~*F. Projects must either stockpile existing topsoil for reuse on the site or import topsoil, rather than amend subsoils. Soil amendments are allowed only where the applicant can demonstrate they are the only practical alternative for enabling the soil to support healthy plantings, promoting better stormwater treatment, or improving soil infiltration capacity (where appropriate).*~~

~~*G. Interim erosion control measures, such as mulching, shall be placed immediately upon completion of grading of the facilities. (Ord. 1463, 2000)*~~

~~*33.050 SITE PLAN*~~

~~*A. All site plans and maps shall include the name, address, and telephone number of the applicant, the scale of the plan, a north arrow, and a vicinity map.*~~

~~*B. The applicant shall submit a site plan drawn to a one inch equals 10 feet or other approved scale, which contains the following information:*~~

~~*1. Existing and proposed contour lines at the following minimum intervals:*~~

~~*a. Two-foot intervals for slopes from zero to 25 percent; and*~~

~~*b. Five-foot intervals for slopes in excess of 25 percent.*~~

~~*2. Location of proposed stormwater facilities including cross-sections.*~~

~~*3. Location of all existing natural features including, but not limited to, delineation of water quality resource areas.*~~

~~*4. Location of all trees measured at six-inch diameter at breast height or greater and a description of existing vegetation species. Where only a portion of a water quality resource area is to be disturbed by a stormwater facility, the tree inventory need only apply to the impacted area. The remaining treed area shall be depicted by outlining the canopy cover.*~~

~~*5. Location, width, and material of access road to facilities for maintenance purposes according to Public Works Design Standards. (Ord. 1463, 2000)*~~

~~*33.060 MAINTENANCE AND ACCESS REQUIREMENTS*~~

~~*Maintenance and access requirements shall meet Public Works Design Standards. (Ord. 1463, 2000)*~~

~~*33.070 PLANT MATERIAL FOR WATER QUALITY FACILITIES*~~

~~*Metro's Native Plant List is incorporated by reference as a part of this chapter. The applicant shall submit a detailed planting plan using species from Metro's Native Plant List. The intent of this plan is to establish native vegetation to protect against erosion and sediment infiltration. A mix of low maintenance trees, shrubs, and groundcover is preferred with an even distribution.*~~

~~*A. The planting plan shall be prepared by a professional landscape architect if the development site contains more than 5,000 square feet of impervious area. The planting plan shall include a table listing the scientific names, size, and quantity of plants.*~~

~~*B. The plan shall include plant location, species, size, and quantity for stormwater detention and treatment facilities. Evergreen trees shall have a minimum height of four feet and deciduous trees shall be at least one-inch caliper in size at the time of planting. Shrubs shall be a minimum of one gallon in size at the time of planting. Spaces shall be filled at mature growth but not so that overplanting occurs and overcrowding results. Temporary irrigation systems or other means of ensuring establishment of the plantings must be specified.*~~

~~*C. Plantings shall be designed to minimize or eliminate the need for herbicides, fertilizers, pesticides, or soil amendments at any time before, during, or after construction, or on a long-term basis. Plantings shall be designed to minimize or eliminate the need for frequent mowing and irrigation.*~~

~~*D. The applicant is responsible for implementing the planting plan during the next fall or spring planting season following permit approval. Prior to planting, noxious vegetation shall be removed. All soil areas must be covered with specified plants and mulch to prevent erosion.*~~

~~*E. Plantings shall be incorporated into a public improvement guarantee agreement, which includes a maintenance bond as required by CDC 91.010(C). The maintenance bond is required for any project involving stormwater quality and detention facilities. (Ord. 1463, 2000)*~~

~~*DIVISION 3. SUPPLEMENTAL PROVISIONS AND EXCEPTIONS*~~

~~*Chapter 31*~~

~~*EROSION CONTROL*~~

~~*Sections:*~~

~~*31.010 PURPOSE*~~

~~31.020 APPLICABILITY~~

~~31.030 PERMIT REQUIRED~~

~~31.040 APPLICATION~~

~~31.050 APPLICATION FOR SINGLE-FAMILY HOMES~~

~~31.060 APPROVAL CRITERIA~~

~~31.070 EROSION AND SEDIMENT CONTROL DESIGN STANDARDS~~

~~31.080 PENALTIES AND ENFORCEMENT~~

~~31.090 PROCEDURES AND APPROVAL PROCESS~~

~~31.010 PURPOSE~~

~~The purpose of this chapter is to require erosion prevention measures and sediment control practices for all development in the City of West Linn during all phases of construction to prevent and restrict the discharge of sediments, and to require final permanent erosion prevention measures after development is completed.~~

~~Erosion prevention techniques shall be designed to protect soil particles from the force of water and wind so they will not be transported from the site. Sediment control measures shall be designed to capture soil particles after they have become dislodged by erosion and attempt to retain the soil particles on site.~~

~~31.020 APPLICABILITY~~

~~This document applies to development that may cause visible or measurable erosion on any property within the City of West Linn. In instances where this chapter conflicts with other applicable City codes, the more restrictive provision shall apply.~~

~~31.030 PERMIT REQUIRED~~

~~An erosion and sediment control permit is required prior to, or concurrently with, approval of development that may cause visible or measurable erosion. To obtain an erosion and sediment control permit, an Erosion and Sediment Control Plan shall be required. For areas within the Tualatin River Basin, the Erosion and Sediment Control Plan shall comply with the Oregon Administrative Rules relating to water quality in the Tualatin River Basin (OAR Chapter 340).~~

~~31.040 APPLICATION~~

~~A. An application shall be initiated by the property owner, or the owner's authorized agent, and shall be accompanied by the appropriate fee.~~

~~B. An application submittal shall include the completed application form and three copies of responses to the approval criteria, except for any plans which shall include three copies at the original scale and three copies reduced to a paper size not greater than 11 inches by 17 inches.~~

~~C. The Erosion and Sediment Control Plan shall follow the guidelines of the Erosion Prevention and Sediment Control Plans, Technical Guidance Handbook. (Clackamas County Department of Utilities, August 1994). The following information shall be submitted on the plan:~~

~~1. The name, address, phone number, mobile phone number, and fax number of the site steward responsible for erosion control at the project site throughout project duration.~~

~~2. The name, address, and 24-hour contact number(s) of the designated emergency contact person.~~

~~3. A description of existing topography and soil characteristics described in the Clackamas County Soil Survey.~~

~~4. The applicant shall submit a plan drawn to an appropriate scale (in order of preference: one inch equals 10 feet to one inch equals 30 feet), which contains the following information:~~

~~a. Existing and proposed contour lines at the following minimum intervals:~~

~~1) Two-foot intervals for slopes zero to 25 percent; and~~

~~2) Five- or 10 foot intervals for slopes in excess of 25 percent slope;~~

~~b. Location of proposed stormwater facilities including cross-sections;~~

~~c. The location of all existing natural features including, but not limited to, delineation of water quality resource areas (if applicable) and trees of a caliper greater than six inches in diameter at breast height (DBH).~~

~~5. Locations of all existing and proposed channels, swales, or drainage pipes which either convey off-site stormwater through, or route stormwater around, the construction area. Identify the nearest receiving stream.~~

~~6. Locations and detailed designs of all proposed erosion and sedimentation control facilities as required by Chapter 32 CDC.~~

~~7. Phasing of any proposed erosion and sedimentation control work clearly indicated on the plan. Include an activity schedule for each phase outlining specific best management practices for the duration of the project.~~

~~8. Details and notes on the site plan for mulching and revegetation. Also include detailed planting procedures, topsoil requirements, seed/plant specifications, and plant maintenance specifications.~~

~~*31.050 APPLICATION FOR SINGLE-FAMILY HOMES*~~

~~*This applies only to the development of an individual, single residential lot one-half acre (21,780 square feet) and smaller with a valid, City-issued building permit. This abbreviated erosion control plan is required whenever the issuance of the building permit will result in the creation of more than 1,000 square feet of disturbed vegetation. The plan shall include the following information:*~~

~~*A. The plan view shall be no smaller than one inch equals 50 feet scale.*~~

~~*B. Building permit number and/or legal description, and the name, address, phone number, and mobile phone number of the person or party to whom the permit is issued.*~~

~~*C. The name, address, 24-hour phone number, mobile phone number, and fax number of the site steward responsible for erosion control at the project site throughout project duration.*~~

~~*D. Location and details of all proposed erosion and sedimentation control best management practices.*~~

~~*31.060 APPROVAL CRITERIA*~~

~~*The City Engineer or designee shall make a written finding, as applicable, with respect to the following criteria when approving, approving with conditions, or denying an erosion control permit.*~~

~~*A. The erosion and sediment control plan shall follow the guidelines of the Erosion Prevention and Sediment Control Plans, Technical Guidance Handbook (Clackamas County Department of Utilities, most current edition).*~~

~~*B. All developments shall be designed to minimize the disturbance of natural topography, vegetation, and soils.*~~

~~*C. Designs shall minimize cuts and fills.*~~

~~*D. The plan shall prevent erosion by employing prevention practices such as non-disturbance, construction phasing, seeding and mulch covers.*~~

~~*E. The plan shall be designed to allow no more than 10 percent cumulative increase in natural stream turbidities, as measured relative to a control point immediately upstream of the turbidity-causing activity. However, limited duration activities necessary to address an emergency or to accommodate essential dredging, construction, or other legitimate activities, and that cause the standard to be exceeded, may be authorized provided all practicable turbidity control techniques have been applied.*~~

~~*F. The applicant shall actively manage and maintain erosion control measures and utilize techniques described in the permit to prevent erosion and control sediment during and following development. Erosion prevention and sediment control measures required by the permit shall remain in place until*~~

~~*disturbed soil areas are permanently stabilized by landscaping, grass, approved mulch, or other permanent soil stabilizing measure.*~~

~~*G. No mud, dirt, rock, or other debris shall be deposited upon a public street or any part of the public stormwater system, surface water system, water quality resource area, or any part of a private stormwater system or surface water system that drains or connects to the public stormwater or surface water system.*~~

~~*H. Projects with a minimum development size of one acre, including subdivisions, apartments, commercial and industrial, shall meet the following requirements:*~~

~~*1. The erosion prevention and sediment control plan is designed by a certified erosion control specialist; and*~~

~~*2. The developer enters into an agreement with the City stating that in the event an erosion emergency occurs and is not repaired within 24 hours of the time the City notifies the developer, the City may hire a contractor or employ City staff to repair the erosion problem and bill the developer 125 percent of the cost to the City.*~~

~~*31.070 EROSION AND SEDIMENT CONTROL DESIGN STANDARDS*~~

~~*The following specific methods of soil erosion and sediment control shall be used during construction to control visible and measurable erosion. These methods shall be consistent with the Erosion Prevention and Sediment Control Plans, Technical Guidance Handbook (Clackamas County Department of Utilities, most current edition).*~~

~~*A. All land area proposed for excavation, vegetation removal, soil stockpiling, or which will have exposed soil shall be considered part of the development site.*~~

~~*B. May 1st through September 30th, the duration of soil exposure shall be kept to a maximum of 21 days. All disturbed soil that remains exposed for 21 days or more during construction shall be treated with an erosion control cover (i.e., plastic, seeding or mulching), following grading or construction, until soils are revegetated or otherwise stabilized.*~~

~~*C. October 1st through April 30th, the duration of soil exposure shall be kept to a maximum of seven days. All disturbed soil that remains exposed for seven days or more during construction shall be treated with an erosion control cover (i.e., plastic, seeding or mulching), following grading or construction, until soils are revegetated or otherwise stabilized.*~~

~~*D. During construction, runoff from the development site shall be controlled, and runoff and sediment resulting therefrom shall be retained on site.*~~

~~*E. A stabilized pad of gravel shall be laid and maintained at all entrances and exits to any development site from which vehicular traffic may track soil or debris onto the public right-of-way.*~~

~~*The gravel pad(s) shall be installed and inspected by City staff prior to any development or site preparation. No other vehicular entrance or exit may be used to access the development site.*~~

~~*F. Gravel pads shall be maintained to function properly. If the gravel pad does not adequately remove dirt and mud from the vehicle wheels, such that mud tracking is evident off site, additional measures must be taken.*~~

~~*G. Topsoil removed for development shall be stockpiled and reused to the degree necessary to restore disturbed areas to their original or enhanced condition, or to assure a minimum of six inches of stable topsoil for revegetation. Additional soil shall be provided if necessary, to support revegetation. Soil shall be stockpiled outside of tree dripline, so as not to affect existing tree health.*~~

~~*H. The owner shall be responsible for the prompt cleanup of all sediments that are carried onto any public or private streets, or onto adjacent property as soon as the owner becomes aware of such problems or within the time required by the City. The owner shall be responsible for cleaning and repairing streets, catch basins, drainageways, stormwater drainage facilities, and adjacent properties contaminated or damaged by sediment. Failure to do so will be in violation of this code.*~~

~~*31.080 PENALTIES AND ENFORCEMENT*~~

~~*The City is authorized to make inspections and take such actions as required to enforce the provisions of this document as outlined in CDC 106.040 and the City of West Linn Municipal Code. Failure to comply with any provision of this chapter or with any term of an erosion control permit shall be deemed a violation of this chapter and subject to enforcement action pursuant to applicable agency and City ordinance.*~~

~~*31.090 PROCEDURES AND APPROVAL PROCESS*~~

~~*A. An erosion control permit, subject to City approval, is a permit for which approval will be granted by the City Engineer or designee provided all conditions are satisfied; and*~~

~~*1. The City Engineer or designee shall make the decision in the manner provided by CDC 99.060.*~~

~~*2. The decision may be appealed to the Planning Commission as prescribed by CDC 99.240(A).*~~

55.120 SITE PLAN

The site plan shall be at the same scale as the site analysis (CDC 55.110) and shall show:

…

H. The location and dimensions of:

1. The entrances and exits to the site;

2. The parking and circulation areas;

3. Loading and service areas for waste disposal, loading, and delivery;

4. Pedestrian and bicycle circulation areas;

5. On-site outdoor recreation spaces and common areas;

6. All utilities, including stormwater detention and treatment; and

7. Sign locations.

…

55.030 ADMINISTRATION ~~AND APPROVAL PROCESS~~

A. A pre-application conference is required before submitting a development plan application for design review as provided by CDC 99.030(B).

B. The application shall be submitted by the record owner(s) of the property, authorized agent, or condemnor.

~~C. Action on the development plan application shall be as provided by Chapter 99 CDC, Procedures for Decision-Making: Quasi-Judicial, and the following:~~

~~1. The Planning Director for Class I design review applications, or Planning Commission for Class II design review applications, shall approve, approve with conditions, or deny the application based on findings related to the applicable criteria set forth in CDC 99.110 and this chapter.~~

…

55.130 GRADING PLAN

The grading and drainage plan shall be at a~~the same~~ scale ~~as the site analysis (CDC 55.110)~~sufficient to evaluate all aspects of the proposal and shall include the following:

…

~~B. Plans and statements to demonstrate the ability of the project to meet Appendix 33 requirements of the Uniform Building Code.~~

99.060 APPROVAL AUTHORITY

This section explains the authority of the Planning Director, Planning Commission, City Council, and Historic Review Board as it relates to quasi-judicial and legislative action.

A. Planning Director authority. The Planning Director shall have the authority to:

1. Approve, deny, or approve with conditions the following applications:

a. A temporary use application for a period of six months or less (Chapter 35 CDC).

b. A home occupation application (Chapter 37 CDC).

c. Access restrictions (Chapter 48 CDC).

d. A minor partition (Chapter 85 CDC).

e. A final subdivision plat (Chapter 89 CDC).

f. A final partition plat (Chapter 89 CDC).

g. A lot line adjustment (Chapter 85 CDC).

h. Enlargement or alteration of a non-conforming single-family structure containing a conforming use (Chapter 66 CDC).

i. Decide applications for a determination of unlisted parking requirements (Chapter 46 CDC).

j. A minor alteration to a historic landmark or a structure in the Historic District (Chapters 25, 26 CDC).

k. Parks Design Review, Class I (Chapter 56 CDC).

l. Design Review, Class I (Chapter 55 CDC).

m. A sign application (Chapter 52 CDC).

n. Sidewalk use permit (Chapter 53 CDC).

o. Flood management area permit (Chapter 27 CDC).

~~*p. Erosion and sediment control permit (Chapter 31 CDC).*~~

q. Tualatin River protection permit (Chapter 28 CDC).

r. Water resource area permit (Chapter 32 CDC).

s. Class I variance (Chapter 75 CDC).

t. Willamette River Greenway permit (Chapter 28 CDC).

u. Extensions of approval when the Planning Director acted as the initial decision-making authority.

2. Approve a use permitted under prescribed conditions provided all of the conditions are satisfied.

3. Make initial interpretations of the provisions of the code.

4. Make the initial determination regarding the status of the following:

a. Non-conforming structure (Chapter 66 CDC).

b. Non-conforming structure involving a non-conforming use (Chapter 65 CDC).

c. Non-conforming use of land (Chapter 67 CDC).

B. Planning Commission authority. The Planning Commission shall have the authority to:

1. Make a recommendation to approve, deny, or approve with conditions to the Council:

a. A quasi-judicial Comprehensive Plan Map amendment. (Chapter 105 CDC).

b. A quasi-judicial zone change involving a concurrent application for a quasi-judicial Plan Map amendment as provided by CDC 99.030(A) (Chapter 105 CDC).

c. The designation of an historic landmark.

2. Approve, deny, or approve with conditions the following applications:

a. A quasi-judicial zone change application (Chapter 105 CDC).

b. A temporary use or structure application for a period of greater than six months (Chapter 35 CDC).

c. A conditional use (Chapter 60 CDC).

d. Enlargement of a non-conforming use or alteration for a structure containing a non-conforming use (Chapter 66 CDC).

e. Enlargement or alteration of a non-single-family residential non-conforming use (Chapter 66 CDC).

f. Class II variance or special waiver (Chapter 75 CDC).

g. Subdivision (Chapter 85 CDC).

h. Planned unit development (Chapter 24 CDC).

i. Design review, Class II (Chapter 55 CDC).

j. Parks design review, Class II (Chapter 56 CDC).

k. Any matter not specifically assigned to another approval authority.

l. Extensions of approval when the Planning Commission acted as the initial decision-making authority.

3. Revoke or modify an approval as provided by CDC 99.330 for any application approved by the Planning Commission or Planning Director.

4. Make an unlisted use determination.

5. An appeal of the Planning Director's interpretation of the code pursuant to CDC 01.060.

BACK TO TOP

Issue No. 20: Amend Chapter 60 (Conditional Use) criteria in order to reduce ambiguity. Staff initially proposed modifications to the CUP approval criteria to remove ambiguity and provide more objective standards. However, in September, after several meetings with the PC, Staff recommended removing them from this round of amendments to allow for more detailed consideration. However, the PC decided to pursue a recommendation anyway; so, staff is including its recommendation be included. At issue is language related to "meeting the overall needs of the community" and "the use will comply with applicable policies of the comprehensive plan."

Planning Commission's position: The Planning Commission agreed to move forward with modifications to the Conditional Use standards that improve clarity. The Planning Commission recommends the following text amendments:

60.070 APPROVAL STANDARDS AND CONDITIONS

A. The Planning Commission shall approve, approve with conditions, or deny an application for a conditional use, except for a manufactured home subdivision in which case the approval standards and conditions shall be those specified in CDC 36.030, or to enlarge or alter a conditional use based on findings of fact with respect to each of the following criteria:

1. The site size and dimensions provide:

a. Adequate area for the needs of the proposed use; and

b. Adequate area for aesthetic design treatment to mitigate any possible adverse effect from the use on surrounding properties and uses through such means as setbacks, screening, landscaping, and other design features.

2. The characteristics of the site are suitable for the proposed use considering size, shape, location, topography, and natural features.

3. The granting of the proposal will provide for a facility that is consistent with the overall needs of the community.

4. The proposal will not have significant adverse impacts on the livability or usability of nearby properties due to issues such as, but not limited, to: noise, glare from lights, late-night operations, odors, litter, or privacy and safety issues.

~~4.~~ 5. Adequate public facilities will be available to provide service to the property at the time of occupancy.

~~5.~~ 6. The applicable requirements of the zone are met, except as modified by this chapter.

~~6.~~ 7. The supplementary requirements set forth in Chapters 52 to 55 CDC, if applicable, are met.

~~7.~~ 8. The use will comply with the applicable policies of the Comprehensive Plan.

9. The proposed use will not alter the character of the surrounding area in a manner which substantially limits, or precludes the use of surrounding properties for permitted uses in the zone.

Staff's position: Although the Planning Commission's proposal is similar to Staff's recommendation, Staff disagrees with the inclusion of the criteria related to the "overall needs of the community" and the requirement to meet the comprehensive plan. These standards are overly broad, subjective and inconsistent with the purposes of conditional uses. The recent LUBA remand of the Lake Oswego-Tigard Water Partnership projects is an example of why it's important to not have this type of ambiguous criteria in the code. In that case, each of the different parties in the case (applicant, neighbors, Staff, Planning Commission, City Council, LUBA) had different interpretations of the phrase "overall needs of the community." The proposed amendment provides for a design that won't adversely impact the surrounding properties and clarifies the criteria for all parties. Staff recommends the following text amendments:

60.070 APPROVAL STANDARDS AND CONDITIONS

A. The Planning Commission shall approve, approve with conditions, or deny an application for a conditional use, except for a manufactured home subdivision in which case the approval standards and conditions shall be those specified in CDC 36.030, or to enlarge or alter a conditional use based on findings of fact with respect to each of the following criteria:

1. The site size and dimensions provide:

a. Adequate area for the needs of the proposed use; and

b. Adequate area for aesthetic design treatment to mitigate any possible adverse effect from the use on surrounding properties and uses through such means as setbacks, screening, landscaping, and other design features.

2. The characteristics of the site are suitable for the proposed use considering size, shape, location, topography, and natural features.

3. ~~The granting of the proposal will provide for a facility that is consistent with the overall needs of the community.~~ The proposal will not have significant adverse impacts on the livability or usability of nearby properties due to issues such as, but not limited, to: noise, glare from lights, late-night operations, odors, litter, or privacy and safety issues.

4. Adequate public facilities will be available to provide service to the property at the time of occupancy.

5. The applicable requirements of the zone are met, except as modified by this chapter.

6. The supplementary requirements set forth in Chapters 52 to 55 CDC, if applicable, are met.

7. ~~The use will comply with the applicable policies of the Comprehensive Plan.~~ The proposed use will not alter the character of the surrounding area in a manner which substantially limits, or precludes the use of surrounding properties for permitted uses in the zone.

BACK TO TOP

Issue No. 21: Amend Chapter 28 (Willamette and Tualatin River Protection) to clarify that acquisition and easements will be negotiated with willing sellers in accordance with City policy regarding property acquisition. The Planning Commission requested that this change be added to this body of work following their recommendation to the City Council to adopt the West Linn Trails Master Plan.

Planning Commission's position: The Planning Commission believes that adding this text provides reassurance to property owners that all property transactions regarding public trails will be negotiated with willing sellers.

CDC 28.110(F)(5) Legal access to, and along, the riverfront in single-family residential zoned areas shall be encouraged and pursued especially when there are reasonable expectations that a continuous trail system can be facilitated. Acquisition and easements will be negotiated with willing sellers in accordance with City policy regarding property acquisition. The City recognizes the potential need for compensation where nexus and proportionality tests are not met. Fee simple ownership by the City shall be preferred. The trail should be dimensioned and designed appropriate to the terrain it traverses and the user group(s) it can reasonably expect to attract. The City shall be responsible for signing the trail and delineating the boundary between private and public lands or access easements.

Staff's position: Although the Planning Commission's proposed change is minor, staff recommends *not making this change at this time*. Cities in Oregon are authorized to obtain property and easements through condemnation and eminent domain where it can be demonstrated that such property or easement provides significant benefit to the City as a whole. It's uncertain what impact the proposed language would have on that authority. Furthermore, staff is concerned that any change to weaken this authority may jeopardize a genuine future need for a public trail. Clarification of terms such as "willing seller" should be established.

While it has been the City's longstanding practice to not condemn property and easements for public trails, this policy (as proposed by the Planning Commission) would be more appropriately contained in a policy-level document.

BACK TO TOP

Issue No. 22: Amend Chapter 56 (Parks and Design Review) to require all paths and trails greater than 200-feet to be reviewed under the Class II Design Review Criteria and decided by the Planning Commission. The Planning Commission recommended this change to ensure that all public trails, greater than 200-feet in length, are reviewed and decided by the Planning Commission in a hearing open to the public.

Planning Commission's position: The Planning Commission believes that paths greater than 200-feet in length warrant a more thorough public input and review process than currently exists.

56.020(C) Class I design review. The following is a non-exclusive list of Class I design review activities or facilities.

~~*2. New trails, if over 200 feet long (see CDC 56.025).*~~

~~*3. New paths, if over 200 feet long (see CDC 56.025).*~~

56.020(D) Class II design review. The following is a non-exclusive list of Class II parks design review activities or facilities.

2. New trails, if over 200 feet long (see CDC 56.025).

3. New paths, if over 200 feet long (see CDC 56.025).

Exemptions (CDC 56.025)	*Class I (CDC 56.020(C))*	*Class II (CDC 56.020(D))*
Sidewalks, paths, walls and fences up to 200 feet long outside of the natural resource area (NRA).	~~*Sidewalks, paths, sidewalks, walls and fences over 200 feet long and all those within NRA.*~~	*Development of a park or park facility and all other major construction projects.*
Architectural or other "replacement in kind." Substituting one sports program for another.	*Addition or elimination of a park facility (e.g., baseball diamond).*	*Program changes to park that result in it being reclassified as a different type of park.*
Color changes.	*Additional playground equipment.*	*Sidewalks, paths, walls and fences over 200 feet long and all those within NRA.*
Minor road realignment under 200 feet long outside of NRA.	*Minor road realignment of over 200 feet and all work in NRA.*	

Revisions to circulation and parking layout.	*Ten percent increase or decrease in building size.*	*Over 10 percent increase in building size.*
Up to 10 percent change in parking lot.		
Directional and interpretive signs.	*Over 10 percent increase or decrease in parking lot.*	
ADA compliance outside of NRA.	*ADA compliance in resource area.*	
Emergency repairs.	*Art under five feet tall.*	*Art over five feet tall.*
Minor landscape plan modification. Ivy removal.	*Major landscape plan modification.*	
Transit shelters.		
Buildings over 10,000 square feet (Chapter 55 CDC applies).		

Staff's position: Staff recommends *no changes* to this section at this time. Staff is concerned that the additional submittal and review requirements associated with a Class II Design Review will add cost and will delay the construction of the City's planned network of public trails. Owing to the concurrent work being done by the Parks and Recreation Board related to trail criteria, Staff recommends more analysis around this issue to better understand the trade-offs between trail development and additional review processes.

BACK TO TOP

Issue No. 23: Change Section 55.100(B)(2)(b) to require *at least* 20 percent of the non-type I and II lands or 20 percent of the significant trees, whichever is greater, to be set aside for tree protection. Due to a long-standing misapplication of a Code standard, there is an immediate need to address this section of the Code. The amendment should correct this discrepancy between the CDC text and City practice. Currently, the CDC authorizes the City to require developers to set aside *up to* 20 percent of the significant tree area (outside of steep slopes or water resource areas) to protect trees on-site. In practice, this has not been uniformly applied. It has often been interpreted to require that 20 percent of the area of the site (that is outside of steep slopes or water resource areas) be required for dedication or easement at the discretion of the City. In fact, the current language permits an applicant to set aside between 0 and 20 percent (at their discretion) of the tree area, outside of steep slopes and water resource areas, for tree protection.

Planning Commission's position: The Planning Commission proposes amending this section to require developers to set aside at least 20 percent of their entire site area, that is outside of steep slopes and water resources areas, for the protection of trees. The Planning Commission proposes the following:

55.100(B) Relationship to the natural and physical environment.

1. The buildings and other site elements shall be designed and located so that all heritage trees, as defined in the municipal code, shall be saved. Diseased heritage trees, as determined by the City Arborist, may be removed at his/her direction.

2. All heritage trees, as defined in the municipal code, all trees and clusters of trees ("cluster" is defined as three or more trees with overlapping driplines; however, native oaks need not have an overlapping dripline) that are considered significant by the City Arborist, either individually or in consultation with certified arborists or similarly qualified professionals, based on accepted arboricultural standards including consideration of their size, type, location, health, long term survivability, and/or numbers, shall be protected pursuant to the criteria of subsections (B)(2)(a) through (f) of this section. In cases where there is a difference of opinion on the significance of a tree or tree cluster, the City Arborist's findings shall prevail. It is important to acknowledge that all trees are not significant and, further, that this code section will not necessarily protect all trees deemed significant.

a. Non-residential and residential projects on Type I and II lands shall protect all heritage trees and all significant trees and tree clusters by either the dedication of these areas or establishing tree conservation easements. Development of Type I and II lands shall require the careful layout of streets, driveways, building pads, lots, and utilities to avoid heritage trees and significant trees and tree clusters, and other natural resources pursuant to this code. The method for delineating the protected trees or tree clusters ("dripline + 10 feet") is explained in subsection (B)(2)(b) of this section. Exemptions of subsections (B)(2)(c), (e), and (f) of this section shall apply.

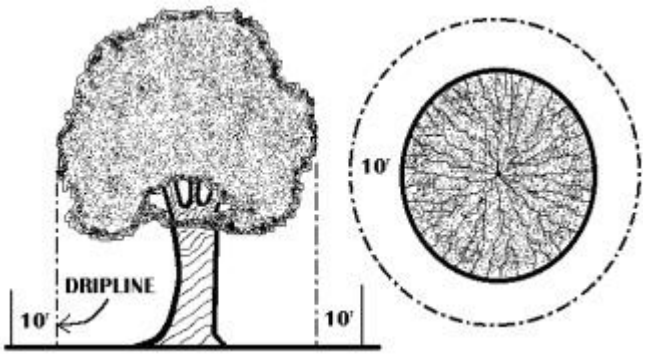

PROTECTED AREA = DRIPLINE + 10 FEET

b. Non-residential and residential projects on non-Type I and II lands shall set aside ~~up to~~ at least 20 percent of the area to protect trees and tree clusters that are determined to be significant, plus any heritage trees. Therefore, in the event that the City Arborist determines that a significant tree cluster exists at a development site, then ~~up to~~ at least 20 percent of the non-Type I and II lands shall be devoted to the protection of those trees, either by dedication or easement. The exact percentage is determined by establishing the driplines of the trees or tree clusters that are to be protected. In order to protect the roots which typically extend further, an additional 10-foot measurement beyond the dripline shall be added. The square footage of the area inside this "dripline plus 10 feet" measurement shall be the basis for calculating the percentage (see figure below). The City Arborist will identify which tree(s) are to be protected. Development of non-Type I and II lands shall also require the careful layout of streets, driveways, building pads, lots, and utilities to avoid significant trees, tree clusters, heritage trees, and other natural resources pursuant to this code. Exemptions of subsections (B)(2)(c), (e), and (f) of this section shall apply. ~~Please note that in the event that more than 20 percent of the non-Type I and II lands comprise significant trees or tree clusters, the developer shall not be required to save the excess trees, but is encouraged to do so.~~

Staff's position: Although staff believes this issue warrants a broader analysis which will take more time, the legally challenging nature of this standard and the disparity in its application requires immediate attention. Therefore, as part of this amendment package, Staff endorses a solution that was originally proposed by the Planning Commission which is consistent with the intent of this section of the code. Staff recommends the section be rewritten to require that *at least* 20 percent of the trees or 20 percent of the area containing significant trees, outside of steep slopes and water resource areas, be preserved. This determination would be made based upon whichever scenario provides the greater ecological benefit at the discretion of the City Arborist. Staff believes this improves on the current language that permits an applicant to set aside between 0 and 20 percent (at their discretion) of the tree area, outside of steep slopes and water resource areas, for tree protection.

Staff believes the Planning Commission's proposal to require that at least 20 percent of the site area (that is outside of water resource areas and steep slopes) be set aside to protect

trees, does not fairly balance the public interest and private property rights. In staff's opinion, in order to proceed with the Planning Commission's proposal, the City should more thoughtfully consider the benefits to the City from setting aside 20 percent of the site area for tree preservation and compare them with the cost to individual landowners for that area of land. The City should also consider the consequences of protecting more land, that is otherwise buildable, for non-development purposes – notably that it adds pressure to develop land outside of the urban growth boundary; areas that may arguably be better suited for habitat and resource protection than small protected groves of trees on residential lots in the City. Staff believes this is the best option until the City is able to revisit this section. Staff proposes the following:

55.100(B) <u>Relationship to the natural and physical environment</u>.

1. The buildings and other site elements shall be designed and located so that all heritage trees, as defined in the municipal code, shall be saved. Diseased heritage trees, as determined by the City Arborist, may be removed at his/her direction.

2. All heritage trees, as defined in the municipal code, all trees and clusters of trees ("cluster" is defined as three or more trees with overlapping driplines; however, native oaks need not have an overlapping dripline) that are considered significant by the City Arborist, either individually or in consultation with certified arborists or similarly qualified professionals, based on accepted arboricultural standards including consideration of their size, type, location, health, long term survivability, and/or numbers, shall be protected pursuant to the criteria of subsections (B)(2)(a) through (f) of this section. In cases where there is a difference of opinion on the significance of a tree or tree cluster, the City Arborist's findings shall prevail. It is important to acknowledge that all trees are not significant and, further, that this code section will not necessarily protect all trees deemed significant.

a. Non-residential and residential projects on Type I and II lands shall protect all heritage trees and all significant trees and tree clusters by either the dedication of these areas or establishing tree conservation easements. Development of Type I and II lands shall require the careful layout of streets, driveways, building pads, lots, and utilities to avoid heritage trees and significant trees and tree clusters, and other natural resources pursuant to this code. The method for delineating the protected trees or tree clusters ("dripline + 10 feet") is explained in subsection (B)(2)(b) of this section. Exemptions of subsections (B)(2)(c), (e), and (f) of this section shall apply.

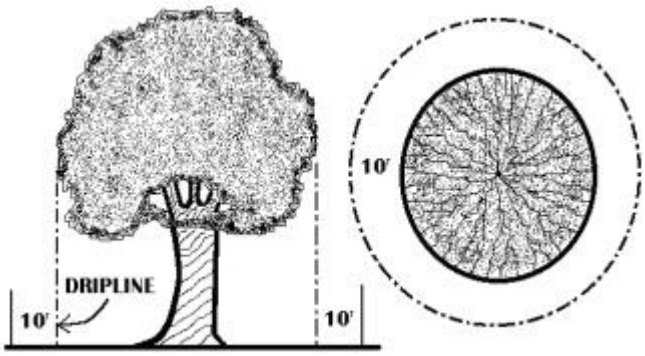

PROTECTED AREA = DRIPLINE + 10 FEET

b. ~~Non-residential and residential~~ Projects on non-Type I and II lands shall set aside heritage trees and ~~up to~~ at least 20 percent of the area containing ~~to protect~~ trees and tree clusters that are determined to be significant, or at least 20 percent of the significant trees, whichever has a greater ecological benefit, as determined by the city arborist. ~~plus heritage trees.~~ Therefore, in the event that the City Arborist determines that a significant tree cluster exists at a development site, the~~n~~ City may require that ~~up to~~ at least 20 percent of the non-Type I and II lands ~~shall~~ containing significant trees, be devoted to the protection of those trees, either by dedication or easement. When determining the area to be protected, the exact percentage is determined by establishing the driplines of the trees or tree clusters that are to be protected. In order to protect the roots which typically extend further, an additional 10-foot measurement beyond the dripline shall be added. The square footage of the area inside this "dripline plus 10 feet" measurement shall be the basis for calculating the percentage (see figure below). The City Arborist will identify which tree(s) are to be protected. Development of non-Type I and II lands shall also require the careful layout of streets, driveways, building pads, lots, and utilities to avoid significant trees, tree clusters, heritage trees, and other natural resources pursuant to this code. Exemptions of subsections (B)(2)(c), (e), and (f) of this section shall apply. ~~Please note that in the event that more than 20 percent of the non-Type I and II lands comprise significant trees or tree clusters, the developer shall not be required to save the excess trees, but is encouraged to do so.~~

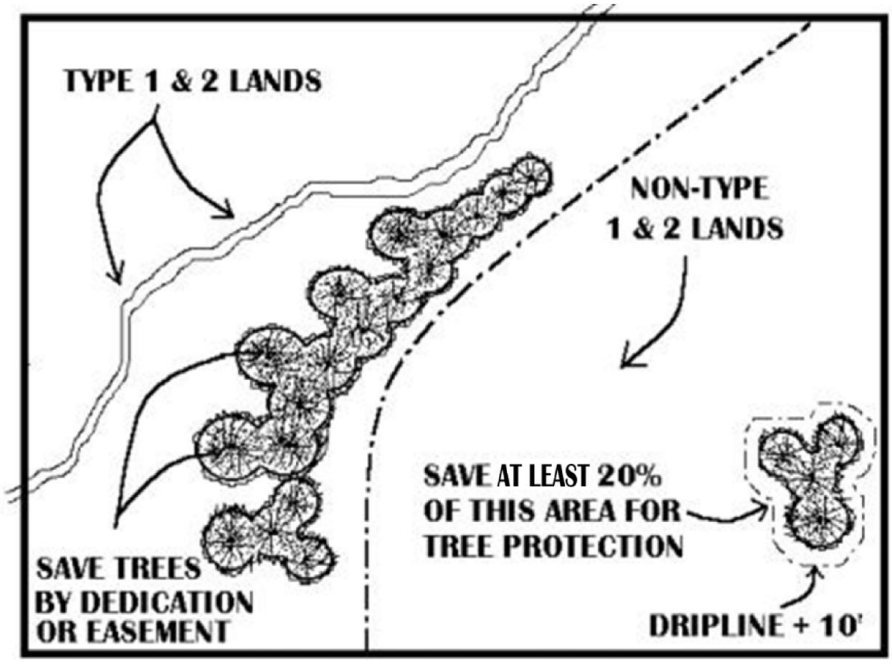

METHOD OF PERCENTAGE CALCULATION

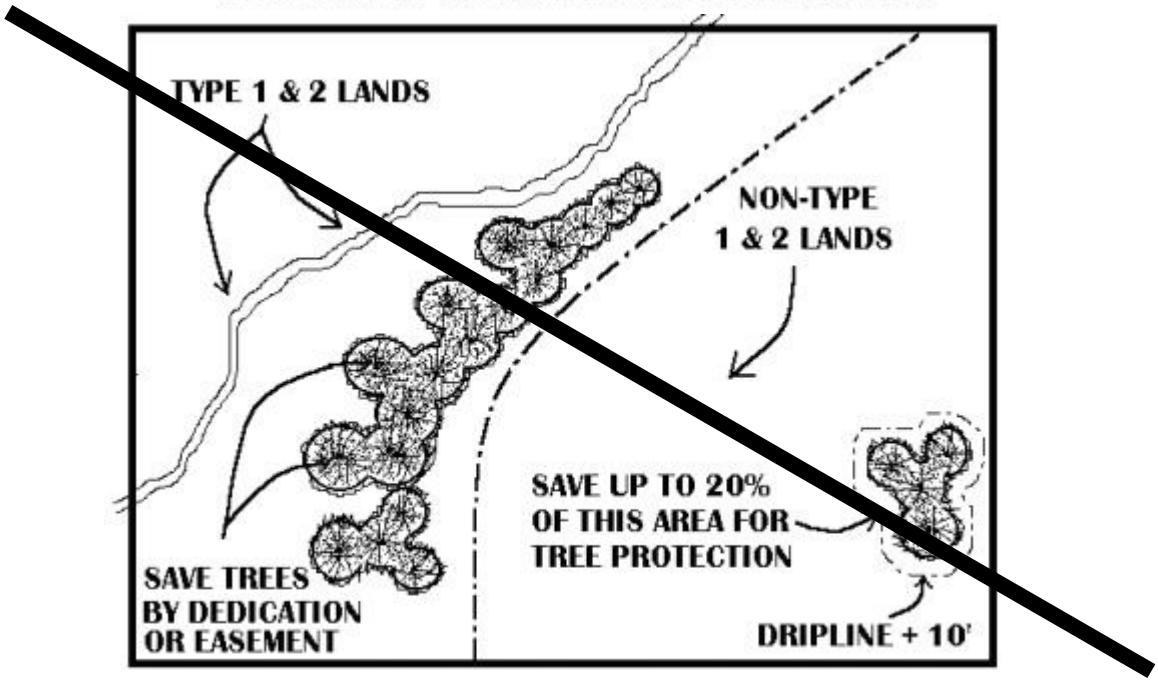

METHOD OF PERCENTAGE CALCULATION

~~*E.G., DRIPLINE + 10 FT. AREA = 2,500 SQ. FT. OR 18% OF TOTAL NON-TYPE I AND II LAND DENSITY CALCULATIONS FOR THIS PARCEL WILL BE BASED ON REMAINING NET SQ. FOOTAGE OF SITE (EXCLUDING THE 2,500 SQ. FT.)*~~

BACK TO TOP

Issue No. 24: Amend CDC Section 99.040 (Quasi-judicial decision-making) to require that staff reports be made available to the public 15, instead of 10 days in advance of the scheduled public hearing. The Planning Commission initiated this proposal to require staff reports be made available to the public 15 days in advance of the public hearing rather than 10 days as is currently the City's standard.

Planning Commission's position: The Planning Commission believes that members of the public currently do not have adequate time to review and prepare for public land use hearings and suggests an amendment that would make staff reports available 15 days in advance of a public hearing.

99.040 DUTIES OF DIRECTOR

A. The Director shall:

3. After accepting an application pursuant to this chapter:

…

d. Make the application, all documents or evidence relied upon by the applicant and applicable criteria available at least 20 days prior to the hearing or date of the Director's decision. Make the staff report available at least ~~10~~15 days prior to the scheduled date of the public hearing(s);

Staff's position: ORS 197.763 requires that staff reports be made available 7 days in advance of a public hearing. The CDC currently requires staff reports be made available 10 days in advance of the public hearing. Staff is concerned that the quality of the staff report may suffer as a result of publishing them a week earlier. Staff recommends *no changes* to this section at this time.

BACK TO TOP

Issue No. 25: Revise CDC Section 99.030 to not obligate the City to cite applicable Federal and State laws and Comprehensive Plan policies during the pre-application meeting. Staff recommended eliminating staff's obligation to cite applicable federal and state laws and rules and policies from the Comprehensive Plan because of the ambiguity of these types of standards.

Planning Commission's position: The Planning Commission agrees with removing the requirement to cite federal and state laws and rules but proposes to maintain the requirement to cite applicable Comprehensive Plan policies. The Planning Commission wants Staff to cite these policies during the pre-application conference as they may be relevant and to ensure these policies are considered. The Planning Commission proposes the following:

99.030 APPLICATION PROCESS: WHO MAY APPLY, PRE-APPLICATION CONFERENCE, REQUIREMENTS, REFUSAL OF APPLICATION, FEES

…

B. Pre-application conferences.

…

5. At such conference, the Planning Director or designee shall:

a. Cite the applicable ~~federal and State laws and rules and the~~ Comprehensive Plan policies and-map designation;

…

Staff's position: Policies in the Comprehensive Plan are not written in a manner that makes them readily applicable as development criteria. For this reason, it is difficult to determine when various policies apply to a development proposal. The exercise of reviewing which policies of the Comprehensive plan (which includes numerous supplemental documents) against a proposed development proposal at the time of the pre-application conference is time consuming, highly subjective and will likely result in raising more questions than answers. Staff has not, in practice, historically provided this information for all pre-application conferences. Staff relies on the policies in the Comprehensive Plan to provide guidance during the interpretation of standards in the CDC. Staff proposes the following:

99.030 APPLICATION PROCESS: WHO MAY APPLY, PRE-APPLICATION CONFERENCE, REQUIREMENTS, REFUSAL OF APPLICATION, FEES

…

B. Pre-application conferences.

…

5. At such conference, the Planning Director or designee shall:

…

a. Cite the ~~applicable federal and State laws and rules and the~~ Comprehensive Plan ~~policies and~~ map designation;

BACK TO TOP