PLANNING MANAGER DECISION

DATE: October 13, 2023

FILE NO.: EXT-23-02

REQUEST: Approval of a second extension of a minor partition and Class I Design Review located at 1791 Blankenship Rd (MIP-18-06/DR-18-06/MISC-21-10)

PLANNER: Ben Gardner, Assistant Planner

Planning Manager DSW

TABLE OF CONTENTS

STAFF ANALYSIS AND RECOMMENDATION

GENERAL INFORMATION 2
EXECUTIVE SUMMARY 3
PUBLIC COMMENT 3
DECISION AND CONDITIONS OF APPROVAL 3

ADDENDUM

STAFF FINDINGS 5

EXHIBITS

PD-1 APPLICANT SUBMITTAL 9
PD-2 COMPLETENESS LETTER 13
PD-3 ORIGINAL EXTENSION AND DECISION MISC-21-10/MIP-18-06/DR-18-06 15
PD-4 AFFIDAVIT AND NOTICE PACKET 202

GENERAL INFORMATION

OWNER/APPLICANT: Jeremy Barnett
19330 Howell St
Gladstone, OR 97027

SITE LOCATION: 1791 Blankenship
West Linn, OR 97068

SITE SIZE: 15315 Square Feet

LEGAL DESCRIPTION: A Portion of lot 4 and 18 of Willamette Tracts
Assessors Map 21E35CB0 Tax Lot 2600

COMP PLAN DESIGNATION: Medium-High Density Residential

ZONING: Residential, R-2.1

APPROVAL CRITERIA: Community Development Code (CDC) Chapter 38: Additional Yard Area Required; Exceptions to Yard Requirements; Storage In Yards; Projections Into Yards; Chapter 43: Single-Family and Duplex Residential Side-Yard Transitions; Chapter 48: Access, Egress and Circulation; Chapter 55: Design Review; Chapter 59: Willamette Neighborhood Mixed-Use Transitional Zone; Chapter 85: Land Division, General Provisions; Chapter 92: Required Improvements; Chapter 99: Procedures for Decision Making: Quasi-Judicial.

120-DAY RULE: The application became complete on September 18, 2023. The 120-day period therefore ends on January 16, 2023.

PUBLIC NOTICE: Notice was mailed to property owners within 500 feet of the subject property and to the affected neighborhood association on September 19, 2023. A sign was placed on the property on September 20, 2023. The notice was posted on the City's website on September 19, 2023. Therefore, public notice requirements of CDC Chapter 99 have been met.

EXECUTIVE SUMMARY

The applicant requests approval of a second extension of a minor partition and Class I Design Review located at 1791 Blankenship Rd (MIP-18-06/DR-18-06/MISC-21-10). The first extension extended the original approval from July 2, 2022 to July 2, 2024. This extension is proposed to extend the validity date from July 2, 2024 to July 2, 2026. The Applicant is requesting the extension in order to complete their proposed project. The applicant has not requested any modifications to the original partition application. Staff has recommended the same conditions of approval from the first extension, MISC-21-10.

PUBLIC COMMENTS

No public comments received for this application

DECISION

The Planning Manager (designee) approves this application (EXT-23-02), based on: 1) the findings submitted by the applicant, which are incorporated by this reference, 2) supplementary staff findings included in the Addendum below, and 3) the addition of conditions of approval below. With these findings, the applicable approval criteria are met. The conditions are as follows:

1. Site Plan. With the exception of modifications required by these conditions, the final plat shall conform to the Partition Site Plan dated September 2018 (Exhibit PD-1).

2. Engineering Standards. All public improvements and facilities associated with the approved site design, including but not limited to street improvements, driveway approaches, curb cuts, utilities, grading, onsite and offsite stormwater, street lighting, easements, easement locations, and connections for future extension of utilities are subject to conformance with the City Municipal Code and Community Development Code. These must be designed, constructed, and completed prior to final plat approval. The City may partner with the applicant to fund additional improvements as part of the project.

3. Reciprocal Access Easement. Prior to final plat approval, the applicant shall record a reciprocal access easement and a mutual maintenance agreement for the shared driveway for Parcels 1 and 2. The easement recording number shall be provided on the face of the final plat.

4. Public Utility Easement. The applicant shall record, on the face of the partition plat, an eight-foot public utility easement along the property frontages of Blankenship Road and 13th Street.

The provisions of the Community Development Code Chapter 99 have been met.

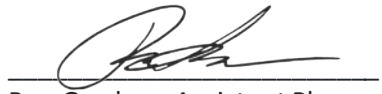

Ben Gardner, Assistant Planner

October 13, 2023
Date

Appeals to this decision must be filed with the West Linn Planning Department within 14 days of the mailing date listed below. The cost of an appeal is $400. The appeal must be filed by an

individual who has established standing by submitting comments prior to the date identified in the public notice. Appeals will be heard by City Council. Approval will lapse 2 years from effective approval date if the final plat is not recorded.

Mailed this 13th day of October, 2023.

Therefore, the 14-day appeal period ends at 5 p.m., on October 27th, 2023.

ADDENDUM

APPROVAL CRITERIA AND FINDINGS
EXT-23-02

This decision adopts the findings for approval contained within the applicant's submittal, with the following exceptions and additions:

85.090 EXPIRATION OR EXTENSION OF APPROVAL
The final plat map shall be submitted to the Planning Director and recorded with the County within three years from the date of approval of the tentative plan, or as approved under CDC 99.325. If the final plat is not recorded by that time, the approval expires.

Staff Finding 1: The Applicant received final approval for the three-parcel partition effective July 2, 2018 in MIP-18-06. See Exhibit PD-3. The original three-year approval period was set to expire July 2, 2022. The applicant submitted for an extension of this period and received an approval that extended the period from July 2, 2022 to July 2, 2024 in MISC-21-10. See Exhibit PD-4. The applicant has requested approval for another two-year extension of this period as allowed per CDC 99.325. See Staff Findings 2-10. The criteria are met.

99.325 EXTENSIONS OF APPROVAL
A. An extension may be granted by the original decision-making body by an additional two years from the effective date of approval pertaining to applications listed in CDC 99.060(A), (B), (C), (D) or (E), as applicable, upon finding that:

Staff Finding 2: The West Linn Planning Manager was the original approval authority for MIP-18-06/DR-18-06 per CDC 99.060(A)(1)(d). Therefore, the Planning Manager has the authority to grant an extension for this application. The criteria are met.

> *1. The applicant has demonstrated that the application is in conformance with applicable CDC provisions and relevant approval criteria enacted since the application was initially approved; and*

Staff Finding 3: Planning Manager Decision MIP-18-06/DR-18-06 approving the three-parcel partition for single family homes demonstrates that all applicable code criteria have been met, subject to the conditions of approval. The underlying zoning of the property was changed from Mixed Use (MU) to Multi-Family Residential (R-2.1) by the City Council under ZC-20-01. The approved project for three lots with single-family homes remains in compliance with permitted uses and dimensional requirements of the R-2.1 zone, including minimum lot size (4,000 SF for detached single-family dwellings) and minimum density (2.7 lots required, 3 proposed). Therefore, no change to the approved plans are required. Subject to the Conditions of Approval, the criteria are met.

2. There are no demonstrated material misrepresentations, errors, omissions, or changes in facts that directly impact the project, including, but not limited to, existing conditions, traffic, street alignment and drainage; or

Staff Finding 4: Staff finds no material misrepresentations, errors, omissions, or changes in facts that impact the project in the review of this application. The criteria are met.

3. The applicant has modified the approved plans to conform with current approval criteria and remedied any inconsistency with subsection (A)(2) of this section, in conformance with any applicable limits on modifications to approvals established by the CDC.

Staff Finding 5: The original application for the minor partition MIP-18-06 was found to be in conformance with the provisions of CDC Chapters 59, 85, and 92, and was therefore approved, subject to the Conditions of Approval. Staff finds that the application continues to be in conformance with the applicable CDC provisions. See Staff Finding 3. Staff does not find any evidence of a demonstrated material misrepresentation, errors, omissions, or changes to the original application. No modifications to the extension of approval MISC-21-10 are proposed and no remedies under CDC 99.325(A)(2) are proposed. The criteria are met.

E. Extension procedures.

1. The application for extension of approval with modifications to the original approval may be submitted only after a pre-application meeting under CDC 99.030(B). If no modifications are made to the original approval, a pre-application conference is not required.

Staff Finding 6: No modifications are proposed to the original approval. Therefore, a pre-application conference is not required. The criteria is met.

2. The application for extension of approval with modifications to the original approval shall satisfy the neighborhood meeting requirements of CDC 99.038 for those cases that require compliance with that section. If no modifications are made to the original approval, no neighborhood meeting is required.

Staff Finding 7: The original application did not require neighborhood contact per CDC 99.038. Therefore, no neighborhood meeting is required. The criteria are met.

3. Applications for extensions must be submitted along with the appropriate deposit to the Community Development Department.

Staff Finding 8: The Applicant submitted the appropriate application, materials, and deposit shown in Exhibit PD-1. The criteria are met.

4. Notice of the decision shall be issued consistent with CDC 99.080.

Staff Finding 9: Per CDC 99.080(E), extensions of approvals shall have the same notice as the original application. The original procedure followed for application MIP-18-06 was a Class A Notice. Thus, this decision has been noticed in line with CDC 99.080(A). See Staff Findings 11-16. The criteria is met.

5. The decision shall not become effective until resolution of all appeal periods, including an opportunity for City Council call-up pursuant to this chapter.

Staff Finding 10: The decision will not be in effect until the resolution of all appeal periods. The criteria is met.

99.080 NOTICE
Notice shall be given in the following ways:
A. Class A Notice. Notice of proposed action or a development application pursuant to CDC 99.060 shall be given by the Director in the following manner:

1. At least 20 days prior to the scheduled hearing date notice shall be sent by mail to:

a. The applicant or the applicant's agent, and the property owner of record on the most recent property tax assessment roll where such property is located.

b. All property owners of record on the most recent property tax assessment roll where such property is located within 500 feet of the site.

c. Any affected governmental agency which has entered into an intergovernmental agreement with the City which includes provision for such notice; plus, where applicable, the Oregon Department of Transportation, Tri-Met, neighboring local jurisdictions, Clackamas County Department of Transportation and Development, and Metro.

d. The affected recognized neighborhood association or citizens advisory committee.

e. For a hearing on appeal or review, all parties and persons with standing described in CDC 99.140 to an appeal or petition for review.

Staff Finding 11: A Class A Notice was prepared and sent via mail to the applicant, the affected neighborhood association, the School District, Trimet, Clackamas County, ODOT, and all property owners within 500 feet of the site perimeter of 1791 Blankenship Rd on 9/19/2023.

2. At least 10 days prior to the hearing or meeting date, notice shall be given in a newspaper of general circulation in the City. An affidavit of publication shall be made part of the administrative record.

a. Decisions pursuant to CDC 99.060(A), Planning Director authority, are exempt from the requirements of this subsection.

Staff Finding 12: This decision is made under the authority of the Planning Director and is therefore exempt from the requirement of posting in a newspaper of general circulation. The criteria is met.

3. At least 10 days prior to the hearing or meeting date, the Planning Director shall cause a sign to be placed on the property which is the subject of the decision or, if the property does not have frontage on a public street, adjacent to the nearest public street frontage in plain view and shall state, "This property is the subject of a land use decision," with the type of use or request indicated.
If the application is not located adjacent to a through street, then an additional sign shall be posted on the nearest through street.

Staff Finding 13: A sign detailing the property as being subject of a land use decision with case information was placed on the property on 9/20/2023. The criteria are met.

4. At least 10 days but no more than 40 days prior to hearing of a proposed zone change for manufactured home parks, notice shall be given to the respective manufactured home park residents.

Staff Finding 14: The application is not related to a zone change for a manufactured home park. The criteria does not apply.

5. The Director shall cause an affidavit of mailing of notice and posting of notice to be filed and made part of the administrative record.

Staff Finding 15: An affidavit of mailing of notice and posting of notice was filed in the land use case record. See Exhibit PD-5. The criteria is met.

6. At the conclusion of the land use action the signs shall be removed.

Staff Finding 16: The sign will be removed after the conclusion of this land use action. The criteria is met.

EXHIBIT PD-1: APPLICANT SUBMITTAL

City of West Linn
Planning & Development • 22500 Salamo Rd #1000 • West Linn, Oregon 97068
Telephone 503.656.4211 • Fax 503.656.4106 • westlinnoregon.gov

DEVELOPMENT REVIEW APPLICATION

For Office Use Only		
STAFF CONTACT Ben Gardner	PROJECT NO(S). EXT-23-02	PRE-APPLICATION NO.
NON-REFUNDABLE FEE(S) $1,760	REFUNDABLE DEPOSIT(S)	TOTAL $1,760

RECEIVED
Lynn Schroder , 9/13/2023 ,3:22:00 PM

Type of Review (Please check all that apply):

- [ ] Annexation (ANX)
- [ ] Appeal and Review (AP)
- [ ] Conditional Use (CUP)
- [ ] Design Review (DR)
- [ ] Easement Vacation
- [ ] Extraterritorial Ext. of Utilities
- [ ] Final Plat or Plan (FP)
- [ ] Flood Management Area
- [ ] Hillside Protection & Erosion Control
- [ ] Historic Review
- [ ] Legislative Plan or Change
- [ ] Lot Line Adjustment (LLA)
- [ ] Minor Partition (MIP) (Preliminary Plat or Plan)
- [ ] Non-Conforming Lots, Uses & Structures
- [ ] Planned Unit Development (PUD)
- [ ] Pre-Application Conference (PA)
- [ ] Street Vacation
- [ ] Subdivision (SUB)
- [ ] Temporary Uses
- [X] Time Extension
- [ ] Variance (VAR)
- [ ] Water Resource Area Protection/Single Lot (WAP)
- [ ] Water Resource Area Protection/Wetland (WAP)
- [ ] Willamette & Tualatin River Greenway (WRG)
- [ ] Zone Change

Home Occupation, Pre-Application, Sidewalk Use, Sign Review Permit, and Temporary Sign Permit applications require different or additional application forms, available on the City website or at City Hall.

Site Location/Address:
1791 Blankenship RD

Assessor's Map No.: T25, R1E, Sec. 35CB
Tax Lot(s): 2600
Total Land Area: .35 acres

Brief Description of Proposal:
Extension of land use approve in file MIP-18-06/DR-18-06 (MISC-21-10)

Applicant Name: (please print) Jeremy Barnett
Address: 19330 Howell St
City State Zip: Gladstone, OR 97027
Phone: 9714045141
Email: localbarnett@gmail.com

Owner Name (required): (please print) Jeremy Barnett
Address: 19330 Howell St
City State Zip: Gladstone, OR 97027
Phone: 9714045141
Email: localbarnett@gmail.com

Consultant Name: (please print)
Address:
City State Zip:
Phone:
Email:

1. All application fees are non-refundable (excluding deposit). **Any overruns to deposit will result in additional billing.**
2. The owner/applicant or their representative should be present at all public hearings.
3. A decision may be reversed on appeal. The permit approval will not be effective until the appeal period has expired.
4. The City accepts electronic (.pdf) land use applications and project submissions from applicants. Applicants should submit this form and supporting documents through the Submit a Land Use Application web page: https://westlinnoregon.gov/planning/submit-land-use-application

The undersigned property owner(s) hereby authorizes the filing of this application, and authorizes on site review by authorized staff. I hereby agree to comply with all code requirements applicable to my application. Acceptance of this application does not infer a complete submittal. All amendments to the Community Development Code and to other regulations adopted after the application is approved shall be enforced where applicable. Approved applications and subsequent development is not vested under the provisions in place at the time of the initial application.

Applicant's signature — Date: 9/13/2023
Owner's signature ***(required)*** — Date: 9/13/2023

JEREMY BARNETT
localbarnett@gmail.com
971-404-5141
1791 Blankenship Rd
West Linn, Oregon 97068

John Floyd
City OF West Linn
Associate Planner

9/13/2023
RE: Request for extension of land use approval in MIP-18-06/DR-18-06

Mr. Floyd,

In October 2021 I received an extension for the above-referenced City of West Linn land use file. Following the extension, I was unable to find a path forward for developing the property myself, so I decided to list the property for sale and have been actively marketing the project. To date I have not received any acceptable offers. Given my inability to sell the property and the positive impact that HB2001 brought to the overall cost of the project I am in the process of pursuing construction financing to complete the development of the site. I am requesting an additional extension to allow the time needed to secure financing and complete the required improvements needed to finalize the plat.

Pursuant to City of West Linn Community Development Code (CDC), my current approval expires on July 2, 2022. Per CDC 99.325(A): A. An extension may be granted by the original decision-making body by an additional two years from the effective date of approval pertaining to applications listed in CDC 99.060(A), (B), (C), (D) or (E), as applicable, upon finding that:

1. The applicant has demonstrated that the application is in conformance with applicable CDC provisions and relevant approval criteria enacted since the application was initially approved; and

2. There are no demonstrated material misrepresentations, errors, omissions, or changes in facts that directly impact the project, including, but not limited to, existing conditions, traffic, street alignment and drainage; or

3. The applicant has modified the approved plans to conform with current approval criteria and remedied any inconsistency with subsection (A)(2) of this section, in conformance with any applicable limits on modifications to approvals established by the CDC.

In response to the items above I confirm the following information:

• Item 1 above, I intend to move forward with the development of the site pursuant to the original approval. No modifications are requested.

• Item 2 above, there are no material misrepresentations, errors, omissions, or changes in facts that directly impact the development of the site.

• Item 3 above, no such conditions exist and therefore no modifications have been made.

Sincerely,

Jeremy Barnett
Project Owner

EXHIBIT PD-2: COMPLETENESS LETTER

September 18, 2022

Jeremy Barnett
19330 Howell St
West Linn, OR 97068

SUBJECT: EXT-23-02 - Extension of 3-lot minor partition MIP-18-06/DR-18-06/MISC-21-10 at 1791 Blankenship Rd

Jeremy Barnett:

Your application submitted on 9/13/23 has been deemed **complete**. The city has 120 days to exhaust all local review; that period ends 1/16/23.

Please be aware that determination of a complete application does not guarantee a recommendation of approval from staff for your proposal as submitted – it signals that staff believes you have provided the necessary information for the Planning Director to render a decision on your proposal.

A 20-day public notice will be prepared and mailed. This notice will identify the earliest potential decision date by the Planning Director.

Please contact me at 503-742-6057, or by email at bgardner@westlinnoregon.gov if you have any questions or comments.

Sincerely,

Ben Gardner
Assistant Planner

EXHIBIT PD-3: ORIGINAL EXTENSION AND DECISION MISC-21-10 / MIP-18-06 / DR-18-06

CITY OF West Linn

PLANNING AND DEVELOPMENT

STAFF REPORT
PLANNING MANAGER DECISION

DATE: October 20, 2021

FILE NO.: MIS-21-10

REQUEST: Request for two-year extension of 2018 approval (MIP-18-06/DR-18-06) for a three-lot partition and Class I Design Review at 1791 Blankenship Road

PLANNER: John Floyd, Associate Planner

_____

Planning Manager DSW

TABLE OF CONTENTS

Page

STAFF ANALYSIS AND RECOMMENDATION
- GENERAL INFORMATION 2
- EXECUTIVE SUMMARY 3
- PUBLIC COMMENTS 3
- DECISION AND CONDITIONS OF APPROVAL 3

ADDENDUM
- STAFF FINDINGS AND FIGURES 5

EXHIBITS
- PD-1 APPLICANT SUBMITTAL 7
- PD-2 COMPLETENESS LETTER 180
- PD-3 AFFADAVIT AND NOTICE PACKET 182

GENERAL INFORMATION

APPLICANT/ OWNER:	Jeremy Barnett 19363 Willamette Drive, MBN 111 West Linn, OR 97068
SITE LOCATION:	1791 Blankenship Road
SITE SIZE:	15,315 square feet
LEGAL DESCRIPTION:	Assessor's Map 2S-1E-35CB Tax Lot 2600
COMP PLAN DESIGNATION:	Medium-High Density Residential
ZONING:	R-2.1, Single Family and Multi-Family Residential
APPROVAL CRITERIA:	Community Development Code (CDC) Chapter 38: Additional Yard Area Required; Exceptions to Yard Requirements; Storage In Yards; Projections Into Yards; Chapter 43: Single-Family and Duplex Residential Side-Yard Transitions; Chapter 48: Access, Egress and Circulation; Chapter 55: Design Review; Chapter 59: Willamette Neighborhood Mixed-Use Transitional Zone; Chapter 85: Land Division, General Provisions; Chapter 92: Required Improvements; Chapter 99: Procedures for Decision Making: Quasi-Judicial.
120-DAY RULE:	The application for the extension became complete on September 9, 2021. The 120-day period therefore ends on January 7, 2022.
PUBLIC NOTICE:	Notice was mailed to property owners within 500 feet of the subject property and to Willamette Neighborhood Association on September 22, 2021. The notice was also posted on the City's website on September, 2021. Therefore, public notice requirements of CDC Chapter 99 have been met.

EXECUTIVE SUMMARY

The application is a request for a two-year extension to a previously approved Minor Partition and Class I Design review (MIP-18-06/DR-18-06) located at 1791 Blankenship Road. The applicant is requesting the extension in order to complete their proposed project. The applicant has not requested any modifications to the original partition application. Staff has recommended the same conditions of approval from MIP-18-06/DR-18-06.

Public comments:

No public comments were received by the close of the comment period October 13, 2021 at 4:00pm).

DECISION

The Planning Manager (designee) approves this application (MISC-21-10), based on: 1) the findings submitted by the applicant, which are incorporated by this reference, 2) supplementary staff findings included in the Addendum below, and 3) the addition of conditions of approval below. With these findings, the applicable approval criteria are met. The conditions are as follows:

1.Site Plan. With the exception of modifications required by these conditions, the final plat shall conform to the Partition Site Plan dated September 2018 (Exhibit PD-1).

2.Engineering Standards. All public improvements and facilities associated with the approved site design, including but not limited to street improvements, driveway approaches, curb cuts, utilities, grading, onsite and offsite stormwater, street lighting, easements, easement locations, and connections for future extension of utilities are subject to conformance with the City Municipal Code and Community Development Code. These must be designed, constructed, and completed prior to final plat approval.

3.Reciprocal Access Easement. Prior to final plat approval, the applicant shall record a reciprocal access easement and a mutual maintenance agreement for the shared driveway for Parcels 1 and 2. The easement recording number shall be provided on the face of the final plat.

4.Public Utility Easement. The applicant shall record, on the face of the partition plat, an eight-foot public utility easement along the property frontages of Blankenship Road and 13th Street.

The provisions of the Community Development Code Chapter 99 have been met.

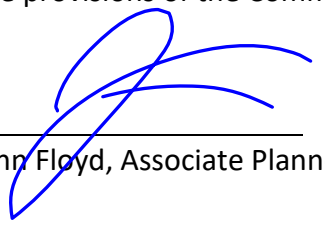

October 20, 2021

John Floyd, Associate Planner Date

Appeals to this decision must be filed with the West Linn Planning Department within 14 days of the mailing date listed below. The cost of an appeal is $400. The appeal must be filed by an individual who has established standing by submitting comments prior to the date identified in the public notice. Appeals will be heard by City Council. Approval will lapse 2 years from effective approval date if the final plat is not recorded.

Mailed this 20th day of October 2021.

Therefore, the 14-day appeal period ends at 5 p.m., on November 3, 2021.

ADDENDUM
APPROVAL CRITERIA AND FINDINGS
MISC-21-10

This decision adopts the findings for approval contained within the applicant's submittal, with the following exceptions and additions:

Chapter 85: General Provisions

85.090 EXPIRATION OR EXTENSION OF APPROVAL

The final plat map shall be submitted to the Planning Director and recorded with the County within three years from the date of approval of the tentative plan, or as approved under CDC 99.325. If the final plat is not recorded by that time, the approval expires.

Staff Finding 1: The applicant received final approval for the three lot parcel partition effective July 2, 2018. (Please see Exhibit PD-1). Therefore, the three-year time frame expires on July 2, 2022. The applicant has requested approval for a two-year extension as allowed per CDC Chapter 99.325. Please see Staff Findings 2 to 5.

99.325 EXTENSIONS OF APPROVAL

A. An extension may be granted by the original decision-making body by an additional two years from the effective date of approval pertaining to applications listed in CDC 99.060(A), (B), (C), (D) or (E), as applicable, upon finding that:

Staff Finding 2: The West Linn Planning Manager was the original approval authority for MIP-18-06/DR-18-06 per CDC 99.060.A.1(d). Therefore, the West Linn Planning Manager is granted authority to render a decision for the extension approval. The criteria are met.

1. *The applicant has demonstrated that the application is in conformance with applicable CDC provisions and relevant approval criteria enacted since the application was initially approved; and*

Staff Finding 3: The Planning Manager Decision approving the three parcel partition for single family homes (MIP-18-06/DR-18-06) demonstrates that all applicable code criteria have been satisfied, subject to conditions of approval. The underlying zoning of the property was changed from Mixed Use (MU) to Multi-Family Residential (R-2.1) by the City Council under ZC-20-01. The approved project for three lots with single-family homes remains in compliance with permitted uses and dimensional requirements of the R-2.1 zone, including minimum lot size (4,000 SF for detached single-family dwellings) and minimum density (2.7 lots required, 3 proposed). Therefore no change to the approved plans are required. Subject to the Conditions of Approval, the criteria are met.

2. There are no demonstrated material misrepresentations, errors, omissions, or changes in facts that directly impact the project, including, but not limited to, existing conditions, traffic, street alignment and drainage; or

Staff Finding 4: Staff has not found any material misrepresentation, errors, omissions, or any changes of facts in the review if this application. The criteria are met.

3. The applicant has modified the approved plans to conform with current approval criteria and remedied any inconsistency with subsection (A)(2) of this section, in conformance with any applicable limits on modifications to approvals established by the CDC.

Staff Finding 5: The original minor partition application (MIP-18-06) was found to be in conformance with the provisions of CDC Chapters 59, 85, and 92, subject to conditions of approval, and was subsequently approved. As discussed in finding 3, staff finds that the application continues to be in conformance with the applicable CDC provisions. Staff does not find any evidence of a demonstrated material misrepresentation, errors, omissions or changes to the original application. No modifications to the original partition is proposed at this time. The criteria are met.

E. Extension procedures.

1. The application for extension of approval with modifications to the original approval may be submitted only after a pre-application meeting under CDC 99.030(B). If no modifications are made to the original approval, a pre-application conference is not required.

Staff Finding 8: No modifications to the original application have been proposed. The applicant is requesting additional time to complete previously approved conditions of approval. No pre-application meeting was required. The criteria are met.

PD-1 APPLICANT SUBMITTAL

City of West Linn
Planning & Development • 22500 Salamo Rd #1000 • West Linn, Oregon 97068
Telephone 503.656.4211 • Fax 503.656.4106 • westlinnoregon.gov

DEVELOPMENT REVIEW APPLICATION

For Office Use Only			
STAFF CONTACT John Floyd	PROJECT NO(S). MISC-21-10		PRE-APPLICATION NO.
NON-REFUNDABLE FEE(S)	REFUNDABLE DEPOSIT(S) $3112.50	TOTAL $3,112.50	

Type of Review (Please check all that apply):

- [ ] Annexation (ANX)
- [ ] Appeal and Review (AP)
- [ ] Conditional Use (CUP)
- [ ] Design Review (DR)
- [ ] Easement Vacation
- [ ] Extraterritorial Ext. of Utilities
- [ ] Final Plat or Plan (FP)
- [ ] Flood Management Area
- [ ] Hillside Protection & Erosion Control
- [ ] Historic Review
- [ ] Legislative Plan or Change
- [ ] Lot Line Adjustment (LLA)
- [ ] Minor Partition (MIP) (Preliminary Plat or Plan)
- [ ] Non-Conforming Lots, Uses & Structures
- [ ] Planned Unit Development (PUD)
- [ ] Pre-Application Conference (PA)
- [ ] Street Vacation
- [ ] Subdivision (SUB)
- [ ] Temporary Uses
- [x] Time Extension
- [ ] Variance (VAR)
- [ ] Water Resource Area Protection/Single Lot (WAP)
- [ ] Water Resource Area Protection/Wetland (WAP)
- [ ] Willamette & Tualatin River Greenway (WRG)
- [ ] Zone Change

Home Occupation, Pre-Application, Sidewalk Use, Sign Review Permit, and Temporary Sign Permit applications require different or additional application forms, available on the City website or at City Hall.

Site Location/Address:
1791 Blankenship RD

Assessor's Map No.:
Tax Lot(s):
Total Land Area:

Brief Description of Proposal:
Extension of land use approve in file MIP-18-06/DR-18-06

Applicant Name: (please print) Jeremy Barnett
Address: 19363 Willamette Dr, MBN 111
City State Zip: West Linn OR 97068
Phone: 9714045141
Email: localbarnett@gmail.com

Owner Name (required): (please print) Jeremy Barnett
Address: 19363 Willamette Dr, MBN 111
City State Zip: West Linn OR 97068
Phone: 9714045141
Email: localbarnett@gmail.com

Consultant Name: (please print)
Address:
City State Zip:
Phone:
Email:

1. All application fees are non-refundable (excluding deposit). **Any overruns to deposit will result in additional billing.**
2. The owner/applicant or their representative should be present at all public hearings.
3. A decision may be reversed on appeal. The permit approval will not be effective until the appeal period has expired.
4. The City accepts electronic (.pdf) land use applications and project submissions from applicants. Applicants should submit this form and supporting documents through the Submit a Land Use Application web page: https://westlinnoregon.gov/planning/submit-land-use-application

The undersigned property owner(s) hereby authorizes the filing of this application, and authorizes on site review by authorized staff. I hereby agree to comply with all code requirements applicable to my application. Acceptance of this application does not infer a complete submittal. All amendments to the Community Development Code and to other regulations adopted after the application is approved shall be enforced where applicable. Approved applications and development is not vested under the provisions in place at the time of the initial application.

RECEIVED
LSCHRODER , 8/10/2021 ,10:02:44 AM

Applicant's signature — Date: 7/9/2021
Owner's signature ***(required)*** — Date: 7/9/2021

JEREMY BARNETT
localbarnett@gmail.com
971-404-5141
Reclamare Inc. CCB 211905

John Floyd
City OF West Linn
Associate Planner

8/10/2021
RE: Request for extension of land use approval in MIP-18-06/DR-18-06

Mr. Floyd,

On June 17, 2019 I received approval for the above-referenced City of West Linn land use file. Development has been underway since the approval, however, with the significant planning changes under development pursuant to House Bill 2001 I am requesting an extension of the expiration date of MIP-18-06/DR-18-06 in order to fully understand the impact of the upcoming changes as they relate to the development of my site.

Pursuant to City of West Linn Community Development Code (CDC), my current approval expires on July 2, 2022. Per CDC 99.325(A): A. An extension may be granted by the original decision-making body by an additional two years from the effective date of approval pertaining to applications listed in CDC 99.060(A), (B), (C), (D) or (E), as applicable, upon finding that:

1. The applicant has demonstrated that the application is in conformance with applicable CDC provisions and relevant approval criteria enacted since the application was initially approved; and

2. There are no demonstrated material misrepresentations, errors, omissions, or changes in facts that directly impact the project, including, but not limited to, existing conditions, traffic, street alignment and drainage; or
3. The applicant has modified the approved plans to conform with current approval criteria and remedied any inconsistency with subsection (A)(2) of this section, in conformance with any applicable limits on modifications to approvals established by the CDC.

In response to the items above I confirm the following information:

• Item 1 above, I intend to move forward with the development of the site pursuant to the original approval. No modifications are requested.

• Item 2 above, there are no material misrepresentations, errors, omissions, or changes in facts that directly impact the development of the site.

• Item 3 above, no such conditions exist and therefore no modifications have been made.

Sincerely,

Jeremy Barnett
Project Owner

CITY OF West Linn
PLANNING AND DEVELOPMENT

STAFF REPORT
PLANNING MANAGER DECISION

DATE: June 17, 2019

FILE NO.: MIP-18-06/DR-18-06

REQUEST: Approval of a Three-Parcel Minor Partition and Class I Design Review at 1791 Blankenship Road.

PLANNER: Darren Wyss, Associate Planner

Planning Manager _____

City Engineer _____

TABLE OF CONTENTS

Page

STAFF ANALYSIS AND RECOMMENDATION
- GENERAL INFORMATION 2
- EXECUTIVE SUMMARY 3
- PUBLIC COMMENTS 3
- DECISION AND CONDITIONS OF APPROVAL 5

ADDENDUM
- STAFF FINDINGS 7

EXHIBITS
- PD-1 APPLICANT SUBMITTAL 27
- PD-2 PUBLIC COMMENT 156
- PD-3 AFFIDAVIT AND NOTICE PACKET 160
- PD-4 COMPLETENESS LETTER 165
- PD-5 PROPERTY MAPS 167

GENERAL INFORMATION

OWNER/ APPLICANT:	Jeremy Barnett 10220 SW View Terrace Tigard, OR 97224
CONSULTANT:	Integrate Architecture 1919 N. Kilpatrick Portland, OR 97217
SITE LOCATION:	1791 Blankenship Road
SITE SIZE:	15,315 square feet
LEGAL DESCRIPTION:	Assessor's Map 2S-1E-35CB Tax Lot 2600
COMP PLAN DESIGNATION:	Mixed-Use
ZONING:	MU, Willamette Neighborhood Mixed-Use Transitional Zone (4,500 sq. ft. min. lot size)
APPROVAL CRITERIA:	Community Development Code (CDC) Chapter 38: Additional Yard Area Required; Exceptions to Yard Requirements; Storage In Yards; Projections Into Yards; Chapter 43: Single-Family and Duplex Residential Side-Yard Transitions; Chapter 48: Access, Egress and Circulation; Chapter 55: Design Review; Chapter 59: Willamette Neighborhood Mixed-Use Transitional Zone; Chapter 85: Land Division, General Provisions; Chapter 92: Required Improvements; Chapter 99: Procedures for Decision Making: Quasi-Judicial.
120-DAY RULE:	The application became complete on March 22, 2018. The 120-day period therefore ends on July 11, 2019.
PUBLIC NOTICE:	Notice was mailed to property owners within 500 feet of the subject property and all neighborhood associations on March 27, 2019. A sign was placed on the property on April 4, 2019. The notice was also posted on the City's website on March 27, 2019. Therefore, public notice requirements of CDC Chapter 99 have been met.

EXECUTIVE SUMMARY

The applicant seeks approval for a three-parcel partition of a 15,315 square foot parcel on the west side of 13th Street at the corner of Blankenship Road. The parcel is located in the Willamette Neighborhood. All three parcels will have frontage on 13th Street and take access from this street. All parcels will exceed the 4,500 square feet minimum lot size for the Willamette Neighborhood Mixed-Use Transitional Zone (Mixed-Use zone). The Mixed-Use zone requires a Class I Design Review and the applicant has met the design standards. The applicant has requested a Planning Director exception to setback requirements as allowed by Community Development Code 55.170.

The existing 13th Street right-of-way is 50 feet wide and sufficient to accommodate a Local Street with Parking on One Side (28-foot pavement width) as the sidewalk on the east side of 13th Street is curb-tight and doesn't have a six-foot planter strip.

The applicant has identified 3 significant trees on the subject property. All three trees are located in the footprint of the proposed new homes and will be removed. The cluster of trees at the northwest corner of the property will be preserved.

The site is predominately Type IV lands (64% of site with slope of less than 10 percent) with the southwest corner having some Type III lands (23% of site with slope of less than 25 percent). There are no environmental overlays on the property. The new homes will connect to existing water and sanitary sewer services in 13th Street.

Public comments:

Public comments were submitted by Jack Wilbersheid (see Exhibit PD-2). He expressed concerns and requested changes to the proposal for:

1. *Orientation of the building lots*. The only option for access to the property is from 13th Street and the applicant has the right to orient the homes to provide access to each lot individually. The three proposed parcels meet the lot dimensional standards of the mixed-use zone.
2. *Opposition to the Director's Exceptions for side yard setbacks.* The Community Development Code allows the applicant to request an exception to reduce setback requirements up to 20 percent. The exceptions are being granted for the side yards between Parcels 1 and 2, Parcels 2 and 3, and Parcel 3 and the property to the south. No exception is being provided for the side yard abutting a street on Parcel 1. Although the side-yard exceptions are being granted for all three parcels, the closest the proposed homes will be to one another on Parcels 1 and 2 is 18 feet, which exceeds the standard 7.5 foot side yard setback for the zone. The proposed homes on Parcels 2 and 3 will utilize the reduced setback. The proposed home on Parcel 3 is being granted a six-inch reduced setback to the property to the south, however for only the first four feet of the southeast corner of the proposed home. After the first four feet, the standard 7.5 foot seback is met and because of the orientation of the home, the rear of the home is

setback 12.5 feet and the back corner of the rear deck is setback 14.5 feet, far exceeding the standard setback.

3. *Height of home blocking TV reception.* There are no provisions in the Community Development Code that requires the applicant to verify a new structure will not block TV reception. The applicant has proposed homes that do not exceed the maximum height requirements of the mixed-use zone.
4. *Parking on 13th Street.* The applicant has provided the minimum amount of off-street parking for each proposed home as required. 13th Street will be improved to meet the 28 foot local street standard.
5. *Stormwater runoff*. The applicant has submitted a preliminary stormwater plan that the West Linn Engineering Division has reviewed. The applicant will be required to meet the West Linn Public Works Design Standards, which includes the rate of stormwater runoff from the property to meet pre-development levels. The applicant will provide treatment with a piped overflow to the public system.
6. *Elevation difference between Parcel 3 and neighboring property*. The applicant has submitted a proposal that meets maximum height requirements for the mixed-use zone. The applicant has not proposed altering the natural slope of the area.
7. *Adequate parking*. The applicant has met the minimum parking requirements for single-family homes.
8. *Number of homes and parking*. The applicant has proposed three parcels, each with a single-family home. Every parcel meets dimensional standards and parking requirements found in the Community Development Code.
9. *Extension of sidewalk*. The Community Development Code requires street improvements along the street frontages of a partition, including the installation of sidewalks.
10. *Staging of development*. The Community Development Code does not have any requirements for committing to development timelines, only the timing for recording the partition plat.
11. *Un-engineered fill materials*. The Building Official will evaluate any undocumented fill during the building permit process and require appropriate remediation. Stormwater from the site will be treated and piped to the existing storm main in 13th Street.
12. *Terraced bank and landscaping*. The applicant is not required to submit a landscaping plan. Adjacent property owners can always approach the applicant to discuss proposed landscaping.
13. *Canyon effect of Parcel 3 on adjacent property*. The applicant has submitted a proposal that meets maximum height requirements for the mixed-use zone. The applicant has been granted an exception to the 7.5 foot side yard setback requirments to allow a 7.0 foot setback for the first four feet of the home on Parcel 3. The rear corner of the home will be setback 12. 5 feet. The rear deck setback is 14.5 feet.
14. *Class I Variance criteria*. The applicant withdrew the Class I Variance and utilized the director's exception found in Community Development Code 55.170.
15. *Mislabeled plans.* This is not a cause for denial. Utilizing all the information submitted lends the user the ability to decipher the mislabeled plans.

16. *Parcel 3 elevations.* Final floor elevations and building heights will be verified during the building permit process to ensure compliance with the Community Development Code and any land use approvals.
17. *Lack of contour information on cross-sections and impacts of proposal.* The applicant has provided required information to determine whether the proposal meets the Community Development Code requirements for this land use application.
18. *Survey not recorded.* The applicant will be required to record a partition plat with Clackamas County within three years of approval.

DECISION

The Planning Manager (designee) approves this application (MIP-18-06), based on: 1) the findings submitted by the applicant, which are incorporated by this reference, 2) supplementary staff findings included in the Addendum below, and 3) the addition of conditions of approval below. With these findings, the applicable approval criteria are met. The conditions are as follows:

1. **<u>Site Plan</u>. With the exception of modifications required by these conditions, the final plat shall conform to the Partition Site Plan dated September 2018 (Exhibit PD-1).**

2. **<u>Engineering Standards</u>. All public improvements and facilities associated with the approved site design, including but not limited to street improvements, driveway approaches, curb cuts, utilities, grading, onsite and offsite stormwater, street lighting, easements, easement locations, and connections for future extension of utilities are subject to conformance with the City Municipal Code and Community Development Code. These must be designed, constructed, and completed prior to final plat approval.**

3. **<u>Reciprocal Access Easement</u>. Prior to final plat approval, the applicant shall record a reciprocal access easement and a mutual maintenance agreement for the shared driveway for Parcels 1 and 2. The easement recording number shall be provided on the face of the final plat.**

4. **<u>Public Utility Easement</u>. The applicant shall record, on the face of the partition plat, an eight-foot public utility easement along the property frontages of Blankenship Road and 13th Street.**

The provisions of the Community Development Code Chapter 99 have been met.

Darren Wyss, Associate Planner — June 17, 2019 Date

Appeals to this decision must be filed with the West Linn Planning Department within 14 days of mailing date. Cost is $400. An appeal to City Council of a decision by the Planning Director shall be heard on the record. The appeal must be filed by an individual who has established standing by submitting comments prior to the decision date. Approval will lapse 3 years from effective approval date if the final plat is not recorded.

Mailed this 18th day of June, 2019.

Therefore, the 14-day appeal period ends at 5 p.m., on July 2, 2019.

ADDENDUM

APPROVAL CRITERIA AND FINDINGS
MIP-18-06

This decision adopts the findings for approval contained within the applicant's submittal, with the following exceptions and additions:

I. CHAPTER 38, ADDITIONAL YARD AREA REQUIRED; EXCEPTIONS TO YARD REQUIREMENTS; STORAGE IN YARDS; PROJECTIONS INTO YARDS
(...)
38.060 PROJECTIONS INTO REQUIRED YARDS
(...)
F. Front and rear porches, covered porches, unroofed landings and stairs (over 30 inches in height) may encroach into the front or rear yard setback up to five feet. Homes on corner lots may have a front porch that wraps around to the side street side. The porch on the side street may also encroach five feet into the required street side setback area. Enclosed porches are not permitted to encroach. The roofline of the house may be extended to cover the porch but no living space shall be allowed inside the front yard setback (i.e., dormers). The Planning Director shall determine compliance with this section as provided by CDC 99.060(A)(3). These provisions do not apply in the Willamette Historic District.

Staff Finding 1: The applicant proposes each of the three new homes to have an uncovered rear deck over 30 inches above ground. Each deck will encroach five-feet into the required 20 foot rear setback. The applicant proposes the front porch (less than 30 inches above ground) of Parcel 1 to encroach four-feet into the required 12 foot street-side yard setback. The criteria is met.

II. CHAPTER 43, SINGLE-FAMILY AND DUPLEX RESIDENTIAL SIDE-YARD TRANSITIONS
(...)
43.040 GENERAL PROVISIONS
New house construction or remodels to the side wall of existing homes shall transition to homes on either side, or satisfy one of the exemptions.
A. The side elevation of the house must be divided into smaller areas or planes to minimize the appearance of bulk when viewed from the neighboring properties or a side street. When the side elevation of the house is more than 700 square feet in area, the elevation must be divided into distinct planes of 700 square feet or less. For the purpose of this standard, a distinct plane is created when there is a recessed or projecting section of the structure, that projects or recedes at least two feet, for a length of at least six feet.

Staff Finding 2: The applicant proposes all three homes to have the north elevation broken into two distinct planes of less than 700 square feet each. The height of the home at the north elevation is 24 feet above grade, with the lowest plane less than 22 feet above grade. The south elevation of all three homes contains a gable in addition to being broken into three distinct planes of less than 700 square feet each. The criteria is met.

III. CHAPTER 48, ACCESS CONTROL
48.025 ACCESS CONTROL
B. Access Control Standards
1. Traffic impact analysis requirements. The City or other agency with access jurisdiction may require a traffic study prepared by a qualified professional to determine access, circulation and other transportation requirements. (See also CDC 55.125, Traffic Impact Analysis.)

Staff Finding 3: No traffic impact analysis (TIA) is required since none of the criteria of 85.170.B(2) are met. For example, an Average Daily Trip count (ADT) increase of 250 is typically required before a TIA is needed. The addition of three additional/new homes generates an ADT increase of 28.71 trips per day according to the Institute of Traffic Engineers (ITE) trip generation manual. The criteria is met.

2. The City or other agency with access permit jurisdiction may require the closing or consolidation of existing curb cuts or other vehicle access points, recording of reciprocal access easements (i.e., for shared driveways), development of a frontage street, installation of traffic control devices, and/or other mitigation as a condition of granting an access permit, to ensure the safe and efficient operation of the street and highway system. Access to and from off-street parking areas shall not permit backing onto a public street.

Staff Finding 4: The applicant proposes a shared driveway for Parcels 1 and 2. A reciprocal access easement and mutual maintenance agreement will be recorded for Parcels 1 and 2 per Condition of Approval 3. Subject to the Conditions of Approval, the criteria is met.

3. Access Options. When vehicle access is required for development (i.e., for off-street parking, delivery, service, drive-through facilities, etc.), access shall be provided by one of the following methods (planned access shall be consistent with adopted public works standards and TSP). These methods are "options" to the developer/subdivider.
a) Option 1. Access is from an existing or proposed alley or mid-block lane. If a property has access to an alley or lane, direct access to a public street is not permitted.
b) Option 2. Access is from a private street or driveway connected to an adjoining property that has direct access to a public street (i.e., "shared driveway"). A public access easement covering the driveway shall be recorded in this case to assure access to the closest public street for all users of the private street/drive.
c) Option 3. Access is from a public street adjacent to the development lot or parcel. If practicable, the owner/developer may be required to close or consolidate an existing access point as a condition of approving a new access. Street accesses shall comply with the access spacing standards in subsection (B)(6) of this section.

Staff Finding 5: Proposed Parcels 1, 2, and 3 will take access from 13th Street, a public street adjacent to the development. Parcels 1 and 2 will share a driveway via an access easement. A reciprocal access easement and mutual maintenance agreement will be recorded per Condition of Approval 3. Subject to the Conditions of Approval, the criteria is met.

4. Subdivisions fronting onto an arterial street.
(...)
5. Double frontage lots.

Staff Finding 6: The proposed partition is not located on an arterial street and all lots will take access from 13th Street, the lowest classification of street. The criteria are met.

6. Access Spacing.
a. The access spacing standards found in the adopted TSP shall be applicable to all newly established public street intersections...variance section in the adopted TSP.
b. Private drives and other access ways are subject to the requirements of CDC 48.060.

Staff Finding 7: The applicant proposal does not include any new public street intersections. The proposal is for one shared-private drive access to 13th Street for Parcels 1 and 2 and a separate private drive access for Parcel 3. Please see Staff Findings 14 to 16 for compliance with CDC 48.060. The criteria are met.

7. Number of access points. For single-family (detached and attached), two-family, and duplex housing types, one street access point is permitted per lot or parcel, when alley access cannot otherwise be provided; except that two access points may be permitted corner lots…

Staff Finding 8: The applicant proposes one shared-private drive access to 13th Street for Parcels 1 and 2 and a separate private drive access for Parcel 3. The criteria are met.

8. Shared driveways. The number of driveway and private street intersections with public streets shall be minimized by the use of shared driveways with adjoining lots where feasible. (...)
a. Shared driveways and frontage streets may be required to consolidate access onto a collector or arterial street. When shared driveways or frontage streets are required, they shall be stubbed to adjacent developable parcels to indicate future extension. "Stub" means that a driveway or street temporarily ends at the property line, but may be extended in the future as the adjacent lot or parcel develops. "Developable" means that a lot or parcel is either vacant or it is likely to receive additional development (i.e., due to infill or redevelopment potential).
b. Access easements (i.e., for the benefit of affected properties) shall be recorded for all shared driveways, including pathways, at the time of final plat approval or as a condition of site development approval.
c. Exception. Shared driveways are not required when existing development patterns or physical constraints (e.g., topography, lot or parcel configuration, and similar conditions) prevent extending the street/driveway in the future

Staff Finding 9: Proposed Parcels 1, 2, and 3 will take access from 13th Street, a public street adjacent to the development. Parcels 1 and 2 will share a driveway via an access easement. A reciprocal access easement and mutual maintenance agreement will be recorded per Condition of Approval 3. Subject to the Conditions of Approval, the criteria is met.

C. Street connectivity and formation of blocks required. In order to promote efficient vehicular and pedestrian circulation throughout the City, land divisions and large site developments shall produce complete blocks bounded by a connecting network of public and/or private streets, in accordance with the following standards:
1. Block length and perimeter. The maximum block length shall not exceed 800 feet or 1,800 feet along an arterial.
2. Street standards. Public and private streets shall also conform to Chapter 92 CDC, Required Improvements, and to any other applicable sections of the West Linn Community Development Code and approved TSP.
3. Exception. Exceptions to the above standards may be granted when blocks are divided by one or more pathway(s), in conformance with the provisions of CDC 85.200(C), Pedestrian and Bicycle Trails, or cases where extreme topographic (e.g., slope, creek, wetlands, etc.) conditions or compelling functional limitations preclude implementation, not just inconveniences or design challenges.

Staff Finding 10: The proposed land division includes no new public or private streets. Adjacent properties on all sides are fully developed and provide a functional limitation to implementation of block length standards as no new block can be formed. The criteria are met.

48.030 MINIMUM VEHICULAR REQUIREMENTS FOR RESIDENTIAL USES
A. Direct individual access from single-family dwellings and duplex lots to an arterial street, as designated in the transportation element of the Comprehensive Plan (...)

Staff Finding 11: The applicant proposes all three parcels to take access from 13th Street, which has a classification of Local Street. The criteria do not apply.

B. When any portion of any house is less than 150 feet from the adjacent right-of-way, access to the home is as follows:
1. One single-family residence, including residences with an accessory dwelling unit as defined in CDC 02.030, shall provide 10 feet of unobstructed horizontal clearance. Dual-track or other driveway designs that minimize the total area of impervious driveway surface are encouraged.
2. Two to four single-family residential homes equals a 14 to 20 foot-wide paved or all-weather surface. Width shall depend on adequacy of line of sight and number of homes.
3. Maximum driveway grade shall be 15 percent…
4. The driveway shall include a minimum of 20 feet in length between the garage door and the back of sidewalk, or, if no sidewalk is proposed, to the paved portion of the right-of-way.

Staff Finding 12: The distance from the 13th Street right-of-way line to the rear property line is approximately 98 feet. All three proposed homes will be less than 150 feet from the adjacent right-of-way. Parcels 1 and 2 will share a driveway with a width of 15 feet and Parcel 3 will have an individual driveway with a width of 10 feet. All driveways will have a slope of less than 5 percent and have a minimum distance of approximately 28 feet between the garage door and back of sidewalk. The criteria are met.

C. When any portion of one or more homes is more than 150 feet from the adjacent right-of-way...
(...)
I. Gated accessways to residential development other than a single-family home are prohibited.

Staff Finding 13: No portion of any proposed home is more than 150 feet from the right-of-way and no gated accessway is proposed. The criteria do not apply.

48.060 WIDTH AND LOCATION OF CURB CUTS AND ACCESS SEPARATION REQUIREMENTS
A. Minimum curb cut width shall be 16 feet.
B. Maximum curb cut width shall be 36 feet...
(...)
C. No curb cuts shall be allowed any closer to an intersecting street right-of-way line than the following:
(...)
6. On a local street when intersecting any other street, 35 feet.
(...)
D. There shall be a minimum distance between any two adjacent curb cuts on the same side of a public street, except for one-way entrances and exits, as follows:
(…)
3. Between any two curb cuts on the same lot or parcel on a local street, 30 feet.

Staff Finding 14: The applicant proposes one 27 foot curb cut to accommodate the shared driveway of Parcels 1 and 2 and one 22 foot curb cut to accommodate the driveway of Parcel 3. The proposed curb cuts are located on 13th Street, a local street, and the shared driveway curb cut is located 35 feet from the intersection with Blankenship Road. The applicant does not propose any two curb cuts on the same parcel. The criteria are met.

E. A rolled curb may be installed...
F. Curb cuts shall be kept at a minimum...

Staff Finding 15: The applicant does not propose a rolled curb. The proposal includes a shared driveway for Parcels 1 and 2, reducing the number of potential curb cuts from 3 to 2. The criteria are met.

G. Adequate line of sight pursuant to engineering standards should be afforded at each driveway or accessway.

Staff Finding 16: The applicant proposes two driveways and vision clearance will be confirmed by planning staff during the building permit process. The criteria are met.

IV. CHAPTER 55, DESIGN REVIEW
55.090 APPROVAL STANDARDS – CLASS I DESIGN REVIEW
The Planning Director shall make a finding with respect to the following criteria when approving, approving with conditions, or denying a Class I design review application:
A. The provisions of the following sections shall be met:
1. CDC 55.100(B)(1) through (4), Relationship to the natural and physical environment, shall apply except in those cases where the proposed development site is substantially developed and built out with no remaining natural physical features that would be impacted.
55.100 APPROVAL STANDARDS – CLASS II DESIGN REVIEW
B. Relationship to the natural and physical environment.
1. The buildings and other site elements shall be designed and located so that all heritage trees, as defined in the municipal code, shall be saved. Diseased heritage trees, as determined by the City Arborist, may be removed at his/her direction.

Staff Finding 17: The subject property contains no heritage trees. The criteria are met.

2. All heritage trees, as defined in the municipal code, all trees and clusters of trees ("cluster" is defined as three or more trees with overlapping driplines; however, native oaks need not have an overlapping dripline) that are considered significant by the City Arborist... that this code section will not necessarily protect all trees deemed significant.
a. Non-residential and residential projects on Type I and II lands shall protect all heritage trees and all significant trees and tree clusters by limiting development in the protected area.
(...)

Staff Finding 18: The subject property contains no Type I or II lands, does not contain any wetlands or protected stream corridors, is not located in the FEMA-mapped floodplain, and is not shown to have landslide potential in Map 16 of the Natural Hazard Mitigation Plan. The criteria are met.

b. Non-residential and residential projects on non-Type I and II lands shall set aside up to 20 percent of the protected areas for significant trees and tree clusters, plus any heritage trees (...)

Staff Finding 19: The subject property contains no Type I or II lands. The City Arborist identified three significant trees on the property: 42 and 44 inch Douglas Fir trees and a 34 inch Oak tree. The applicant proposes to remove the significant trees due to their location in the building footprints. The applicant is required to set aside up to 20 percent of protected area. Although the significant trees will be removed, the applicant will be preserving the cluster of trees at the northwest corner of the property. The criteria is met.

c. Where stubouts of streets occur on abutting properties, and the extension of those streets will mean the loss of significant trees, tree clusters, or heritage trees (...)
d. For both non-residential and residential development, the layout shall achieve at least 70 percent of maximum density for the developable net area (...)

f. If the protection of significant tree(s) or tree clusters is to occur in an area of grading that is necessary for the development of street grades, per City construction codes, which will result in an adjustment in the grade of over or under two feet (...)

Staff Finding 20: The proposal is for the construction of single-family homes. No new streets are proposed. The parcel is 15,315 square feet with a minimum lot size of 4,500 square feet. A maximum density of three parcels can be created. To achieve 70 percent of maximum density, 2.1 parcels must be created. The applicant is creating three new parcels. No new street grading will impact significant trees. The criteria is met.

3. The topography and natural drainage shall be preserved to the greatest degree possible.

Staff Finding 21: The subject property is located in a built out neighborhood and the applicant does not propose any significant grading. The applicant is proposing to terrace the homes down the slope from Blankenship Road. The criteria is met.

4. The structures shall not be located in areas subject to slumping and sliding. The Comprehensive Plan Background Report's Hazard Map, or updated material as available and as deemed acceptable by the Planning Director, shall be the basis for preliminary determination.

Staff Finding 22: The subject property is not identified as a landslide risk in any of the City's hazard maps. Sixty-four percent (64%) of the property is less than 10 percent slope and shows no signs of any historic slumping or sliding. The criteria is met.

2. CDC 55.100(B)(5) and (6), architecture, et al., shall only apply in those cases that involve exterior architectural construction, remodeling, or changes.
5. There shall be adequate distance between on-site buildings and on-site and off-site buildings on adjoining properties to provide for adequate light and air circulation and for fire protection.

Staff Finding 23: The applicant proposes a minimum of 15 feet between the single-family homes on Parcels 1 and 2, and a minimum of 12 feet between the single-family homes on Parcels 2 and 3. Minimum distance to off-site buildings is 25 feet. Adequate light and air circulation is provided. The criteria is met.

6. Architecture.
a. The proposed structure(s) scale shall be compatible with the existing structure(s) on site and on adjoining sites. Contextual design is required. Contextual design means respecting and incorporating prominent architectural styles, building lines, roof forms, rhythm of windows, building scale and massing of surrounding buildings in the proposed structure. The materials and colors shall be complementary to the surrounding buildings.
b. While there has been discussion in Chapter 24 CDC about transition, it is appropriate that new buildings should architecturally transition in terms of bulk and mass to work with, or fit, adjacent existing buildings. This transition can be accomplished by selecting designs that "step

down" or "step up" from small to big structures and vice versa (see figure below). Transitions may also take the form of carrying building patterns and lines (e.g., parapets, windows, etc.) from the existing building to the new one.

c. Contrasting architecture shall only be permitted when the design is manifestly superior to adjacent architecture in terms of creativity, design, and workmanship, and/or it is adequately separated from other buildings by distance, screening, grade variations, or is part of a development site that is large enough to set its own style of architecture.

d. Human scale is a term that seeks to accommodate the users of the building and the notion that buildings should be designed around the human scale (i.e., their size and the average range of their perception). Human scale shall be accommodated in all designs by, for example, multi-light windows that are broken up into numerous panes, intimately scaled entryways, and visual breaks (exaggerated eaves, indentations, ledges, parapets, awnings, engaged columns, etc.) in the facades of buildings, both vertically and horizontally.

The human scale is enhanced by bringing the building and its main entrance up to the edge of the sidewalk. It creates a more dramatic and interesting streetscape and improves the "height and width" ratio referenced in this section.

e. The main front elevation of commercial and office buildings shall provide at least 60 percent windows or transparency at the pedestrian level to create more interesting streetscape and window shopping opportunities. One side elevation shall provide at least 30 percent transparency. Any additional side or rear elevation, which is visible from a collector road or greater classification, shall also have at least 30 percent transparency. Transparency on other elevations is optional. The transparency is measured in lineal fashion. For example, a 100-foot-long building elevation shall have at least 60 feet (60 percent of 100 feet) in length of windows. The window height shall be, at minimum, three feet tall. The exception to transparency would be cases where demonstrated functional constraints or topography restrict that elevation from being used. When this exemption is applied to the main front elevation, the square footage of transparency that would ordinarily be required by the above formula shall be installed on the remaining elevations at pedestrian level in addition to any transparency required by a side elevation, and vice versa. The rear of the building is not required to include transparency. The transparency must be flush with the building elevation.

f. Variations in depth and roof line are encouraged for all elevations.

To vary the otherwise blank wall of most rear elevations, continuous flat elevations of over 100 feet in length should be avoided by indents or variations in the wall. The use of decorative brick, masonry, or stone insets and/or designs is encouraged. Another way to vary or soften this elevation is through terrain variations such as an undulating grass area with trees to provide vertical relief.

g. Consideration of the micro-climate (e.g., sensitivity to wind, sun angles, shade, etc.) shall be made for building users, pedestrians, and transit users, including features like awnings.

h. The vision statement identified a strong commitment to developing safe and attractive pedestrian environments with broad sidewalks, canopied with trees and awnings.

i. Sidewalk cafes, kiosks, vendors, and street furniture are encouraged. However, at least a four-foot-wide pedestrian accessway must be maintained per Chapter 53 CDC, Sidewalk Use.

Staff Finding 24: Staff incorporates the applicant findings found on pages 4-5 of the applicant submittal (Exhibit PD-1). The criteria is met.

3. Pursuant to CDC 55.085, the Director may require additional information and responses to additional sections of the approval criteria of this section depending upon the type of application.

Staff Finding 25: The Planning Director does not require any additional information. This criteria is met.

4. The design standards or requirements identified in the base zone shall apply.

Staff Finding 26: Please see Staff Findings 30 to 36. This criteria is met.

B. An application may be approved only if adequate public facilities will be available to provide service to the property at the time of occupancy.

Staff Finding 27: The subject property is bordered by 13th Street, which has water, sanitary sewer, and stormwater infrastructure available. City utility master plans confirm there is adequate capacity to service the proposal. The criteria is met.

C. The Planning Director shall determine the applicability of the approval criteria in subsection A of this section.

Staff Finding 28: The Planning Director has made findings for all approval criteria. This criteria is met.

55.170 EXCEPTIONS TO UNDERLYING ZONE, YARD, PARKING, SIGN PROVISIONS, AND LANDSCAPING PROVISIONS
A. The Planning Director may grant an exception to the dimensional building setback or yard requirements in the applicable zone based on findings that the approval will satisfy the following criteria:
1. A minor exception that is not greater than 20 percent of the required setback.
2. A more efficient use of the site.
3. The preservation of natural features that have been incorporated into the overall design of the project.
4. No adverse affect to adjoining properties in terms of light, air circulation, noise levels, privacy, and fire hazard.
5. Safe vehicular and pedestrian access to the site and safe on-site vehicular and pedestrian circulation.

Staff Finding 29: Staff incorporates the applicant findings found on pages 6-7 of the applicant submittal (Exhibit PD-1). The criteria are met.

V. WILLAMETTE NEIGHBORHOOD MIXED-USE TRANSITIONAL ZONE
59.030 PERMITTED USES
The following are uses permitted outright in this zone:
1. Single-family detached dwelling;
(...)

Staff Finding 30: The applicant proposes to construct three new single-family homes, a permitted use. This criteria is met.

59.070 DIMENSIONAL REQUIREMENTS, USES PERMITTED OUTRIGHT AND USES PERMITTED UNDER PRESCRIBED CONDITIONS
A. Except as may be otherwise provided by the provisions of this code, the following are the requirements for uses within this zone:
1. The minimum front lot line length or the minimum lot width at the front lot line shall be 35 feet.
2. The average minimum lot width shall be 50 feet.
3. The average minimum lot depth shall not be less than 90 feet.
4. The minimum yard dimensions or minimum building setback area from the lot line shall be:
a. For a front yard, 12 feet minimum and 20 feet maximum to the structure, except that a porch, patio, or pedestrian amenity may be six feet from the front property line.
b. For an interior side yard, seven and one-half feet.
c. For a side yard abutting a street, 12 feet.
d. For a rear yard, 20 feet. However, where the use abuts a residential district, the setback distance required in the residential district shall apply, and within the setback area a buffer of at least 10 feet of landscaping in addition to a fence is required.
5. The maximum building height shall be two stories above grade, or 35 feet, whichever is less.
6. Maximum building size for all floors shall not exceed 6,000 square feet above grade excluding porches.
7. The maximum building floor area ratio shall be 0.4, except that the ground floor of the building shall not exceed 5,000 square feet. Type I and II lands shall not be counted toward lot area when determining allowable floor area ratio, except that a minimum floor area ratio of 0.30 shall be allowed regardless of the classification of lands within the property. That 30 percent shall be based upon the entire property including Type I and II lands. Existing residences in excess of this standard may be replaced to their prior dimensions when damaged without the requirement that the homeowner obtain a non-conforming structures permit under Chapter 66 CDC.
8. The minimum lot size shall be 4,500 square feet and the maximum lot size shall be 10,000 square feet, unless defined as an existing lot of record.

Staff Finding 31: Staff incorporates the applicant findings found on page 8 of the applicant submittal (Exhibit PD-1). The criteria are met.

B. Design standards. All uses in the mixed-use zone shall comply with the provisions of Chapter 55 CDC, except for CDC 55.100(B)(7)(a), (b), (c), (h), (i), and (j). Further, single-family and duplex

residential uses shall also comply with the Class I design review standards. In addition, the design standards described below apply to all uses.
1. Residential-style building with single story porch on the front, and on the side where it abuts a street.

Staff Finding 32: The applicant has provide a front porch on all three proposed homes, including a porch that wraps around the side on Parcel 1. The criteria are met.

2. New sidewalk construction shall be allowed to match the historical sidewalk standards in this zone.

Staff Finding 33: The applicant proposes to construct a six-foot sidewalk along the subject property's 13th Street frontage. The criteria are met.

3. Off-street parking shall be behind, under, or on the side of building.
4. Garages shall not extend any closer to the street than the street-facing facade of the house.

Staff Finding 34: The applicant proposes to construct three single-family homes with the garage flush with the front facade of the homes facing 13th Street. The criteria are met.

5. There shall be no illuminated outdoor advertising on accessory buildings, equipment, or vending machines
6. These design standards, subsections (B)(1) through (5) of this section, shall not apply to public facilities such as reservoirs, water towers, treatment plants, fire stations, pump stations, power transmission facilities, etc. It is recognized that many of these facilities, due to their functional requirements, cannot readily be configured to meet these design standards. However, attempts shall be made to make the design sympathetic to surrounding properties through compatible architecture, enhanced landscaping, setbacks, buffers, and other reasonable means.

Staff Finding 35: The applicant proposes to construct three single-family homes and does not propose any outdoor advertising nor any public facilities. The criteria are met.

59.080 ADDITIONAL USE REQUIREMENTS
In addition to all other provisions of this section, the following additional requirements may apply:
A. Permitted uses may only be open from 6:00 a.m. to 10:00 p.m. and are subject to the noise provisions of Chapter 55 CDC.
B. Exterior business activity shall not take place beyond the rear wall of the building when the subject property abuts a residential district, except for parking and refuse storage. Refuse storage must be buffered or enclosed and may not abut a property line that adjoins a residential zone.

Staff Finding 36: The applicant proposes to construct three single-family homes and does not propose any use open to the general public nor any exterior business activity. The criteria are met.

VI. CHAPTER 85, GENERAL PROVISIONS
85.080 SUBSTANTIAL DEVIATTION FROM APPROVED PLAN PROHIBITED
A. Approval of the tentative plan shall require the final plat to be in substantial conformance...however
B. Approval of the tentative plan...shall not constitute final acceptance of the plat of the proposed subdivision or partition for recording.

Staff Finding 37: The City will ensure the final plat substantially conforms to the approved tentative plan by satisfaction of Condition of Approval 1. The criteria are met.

85.200 APPROVAL CRITERIA
No tentative subdivision or partition plan shall be approved unless adequate public facilities will be available to provide service to the partition or subdivision area prior to final plat approval and the Planning Commission or Planning Director, as applicable, finds that the following standards have been satisfied, or can be satisfied by condition of approval.
A. Streets.
1. General. The location, width and grade of streets shall be considered in their relation to existing and planned streets...Internal streets are the responsibility of the developer. All streets bordering the development site are to be developed by the developer with, typically, half-street improvements or to City standards prescribed by the City Engineer. Additional travel lanes may be required to be consistent with adjacent road widths or to be consistent with the adopted Transportation System Plan (TSP) and any adopted updated plans.

Staff Finding 38: The proposal does not include any internal public streets. The applicant proposes installation of half-street improvements along the property's 13th Street frontage to meet the cross-section for a Local Street with Parking on One Side per City of West Linn Public Works Standards. The criteria is met.

2. Right-of-way widths shall depend upon which classification of street is proposed. The right-of-way widths are established in the adopted TSP.

Staff Finding 39: The proposal is located on 13th Street, a local street that has a 50 foot right-of-way width adjacent to the subject property. City standards for a Local Street with Parking on One Side are found in Exhibit 9 of the 2016 West Linn Transportation System Plan. The standards require a 52 foot right-of-way (6 foot sidewalks, 6 foot planter strips, 8 foot parking lane, and 10 foot travel lanes). No additional right-of-way dedication is required as the existing curb-tight sidewalk across 13th Street from the subject property reduces the right-of-way need by six-feet. The criteria is met.

3. Street widths. Street widths shall depend upon which classification of street is proposed. The classifications and required cross sections are established in the adopted TSP…

Staff Finding 40: The proposal is located on 13th Street, a local street that has a 50 foot right-of-way width adjacent to the subject property. City standards for a Local Street with Parking on One Side are found in Exhibit 9 of the 2016 West Linn Transportation System Plan. The standards require a 52 foot right-of-way (6 foot sidewalks, 6 foot planter strips, 8 foot parking lane, and 10 foot travel lanes). No additional right-of-way dedication is required as the existing curb-tight sidewalk across 13th Street from the subject property reduces the right-of-way need by six-feet. Blankenship Road is fully improved and meets collector street standards. The criteria is met.

4. The decision-making body shall consider the City Engineer's recommendations on the desired right-of-way width, pavement width and street geometry of the various street types within the subdivision after consideration by the City Engineer of the following criteria:
(…)
5. Additionally, when determining appropriate street width, the decision-making body shall consider the following criteria:
(...)

Staff Finding 41: The proposal is located on 13th Street, a local street that has a 50 foot right-of-way width adjacent to the subject property. City standards for a Local Street with Parking on One Side are found in Exhibit 9 of the 2016 West Linn Transportation System Plan. The standards require a 52 foot right-of-way (6 foot sidewalks, 6 foot planter strips, 8 foot parking lane, and 10 foot travel lanes). No additional right-of-way dedication is required as the existing curb-tight sidewalk across 13th Street from the subject property reduces the right-of-way need by six-feet. The criteria is met.

6. Reserve strips. Reserve strips or street plugs controlling the access to streets are not permitted unless owned by the City.
7. Alignment. All streets other than local streets or cul-de-sacs, as far as practical, shall be in alignment with existing streets by continuations of the centerlines thereof. The staggering of street alignments...
8. Future extension of streets. Where necessary to give access to or permit a satisfactory future subdivision of adjoining land, streets shall be extended to the boundary of the subdivision...
9. Intersection angles. Streets shall be laid out to intersect angles as near to right angles as practical...

Staff Finding 42: The applicant proposes no reserve strips, no new streets or intersections, and is precluded from any potential future extension of streets by existing development patterns. The criteria are met.

10. Additional right-of-way for existing streets. Wherever existing street rights-of-way adjacent to or within a tract are of inadequate widths based upon the standards of this chapter, additional right-of-way shall be provided at the time of subdivision or partition.

Staff Finding 43: The proposal is located on 13th Street, a local street that has a 50 foot right-of-way width adjacent to the subject property. City standards for a Local Street with Parking on One Side are found in Exhibit 9 of the 2016 West Linn Transportation System Plan. The standards require a 52 foot right-of-way (6 foot sidewalks, 6 foot planter strips, 8 foot parking lane, and 10 foot travel lanes). No additional right-of-way dedication is required as the existing curb-tight sidewalk across 13th Street from the subject property reduces the right-of-way need by six-feet. The criteria is met.

11. Cul-de-sacs.
a. New cul-de-sacs and other closed-end streets...
(...)
f. All cul-de-sacs/closed-end streets shall terminate with a turnaround built to one of the following specifications (measurements are for the traveled way and do not include planter strips or sidewalks).

Staff Finding 44: The applicant does not propose any new cul-de-sacs or closed-end streets. The criteria are met.

12. Street Names
13. Grades and Curves
14. Access to local streets. Intersection of a local residential street with an arterial street may be prohibited...
15. Alleys

Staff Finding 45: The applicant does not propose any new public streets. The proposed partition is adjacent to 13th Street, a City street with a functional classification of local street, and does not require access on to an arterial street. No alley is proposed. The criteria are met.

16. Sidewalks. Sidewalks shall be installed per CDC 92.010(H), Sidewalks. The residential sidewalk width is six feet plus planter strip…or to match existing sidewalks or right-of-way limitations.
17. Planter strip. The planter strip is between the curb and sidewalk providing space for a grassed or landscaped area and street trees. The planter strip shall be at least 6 feet wide…or in response to right-of-way limitations.

Staff Finding 46: The applicant will install 6 foot sidewalk and 4 foot planter strip along the subject property's frontage of 13th Street. The four foot planter strip is a result of the existing pavement not being correctly centered in the right-of-way. The criteria are met.

18. Streets and roads shall be dedicated without any reservations or restrictions.
19. All lots in a subdivision shall have access to a public street. Lots created by partition may have access to a public street via an access easement pursuant to the standards and limitations set forth for such accessways in Chapter 48 CDC.

Staff Finding 47: The application is for a partition of an existing parcel. All three proposed parcels will have direct access to a public street. The applicant proposes a shared driveway for Parcels 1 and 2. Please see Staff Findings 3 through 16. No new streets or roads are proposed. Subject to the Conditions of Approval, the criteria is met.

20. Gated streets. Gated streets are prohibited in all residential areas on both public and private streets. A driveway to an individual home may be gated.
21. Entryway treatments and street isle design...

Staff Finding 48: The applicant does not propose any gated streets or driveways, nor entryway treatments or street isle designs. These criteria are met.

22. Based upon the determination of the City Manager or the Manager's designee, the applicant shall construct or cause to be constructed, or contribute a proportionate share of the costs, for all necessary off-site improvements identified by the transportation analysis commissioned to address CDC 85.170(B)(2) that are required to mitigate impacts from the proposed subdivision…

Staff Finding 49: The proposal is not a subdivision. This criteria does not apply. However, the proposal will add three additional dwelling units. The addition of three additional dwelling units should only generate an ADT of 28.71 new trips per day according to the Institute of Traffic Engineers (ITE) trip generation tables at 9.57 trips per household. The proposal is in compliance with the City's Transportation System Plan and will not create impacts to existing off-site facilities that would trigger the need for improvements. The criteria is met.

B. Blocks and Lots.
1. General. The length, width, and shape of blocks shall be designed with due regard for the provision of adequate building sites for the use contemplated; consideration of the need for traffic safety, convenience, access, circulation, and control; and recognition of limitations and opportunities of topography and solar access.
2. Sizes. The recommended block size is 400 feet in length to encourage greater connectivity within the subdivision. Blocks shall not exceed 800 feet in length between street lines... Block sizes and proposed accesses must be consistent with the adopted TSP.

Staff Finding 50: The applicant does not propose new street connections or new blocks. Existing development patterns preclude a new street connection between across the subject property. The criteria are met.

3. Lot size and shape. Lot or parcel size, width, shape, and orientation shall be appropriate for the location of the subdivision or partition... Depth and width of properties reserved or laid out for commercial and industrial purposes shall be adequate to provide for the off-street parking and service facilities required by the type of use proposed.

Staff Finding 51: The applicant proposal meets lot dimensional requirements. The applicant has demonstrated all three parcels will contain a buildable area for single-family homes. The criteria are met.

4. Access. Access to subdivisions, partitions, and lots shall conform to the provisions of Chapter 48 CDC, Access, Egress and Circulation.

Staff Finding 52: Please see Staff Findings 3 through 16. Subject to the Conditions of Approval, the criteria is met.

5. Double Frontage lots and parcels.
6. Lot and parcel side lines.

Staff Finding 53: Proposed Parcel 1 is a corner lot but has no physical access to Blankenship Road because of the grade difference created by an existing retaining wall. Parcel lines are at right angles as far as practicable to create parcels that meet dimensional standards and contain a buildable space for a single-family home. The criteria are met.

7. Flag lots. Flag lots can be created where it can be shown that no other reasonable street access is possible to achieve the requested land division...Where two to four flag lots share a common accessway, the minimum street frontage and accessway shall be eight feet in width per lot...The following dimensional requirements shall apply to flag lots:
a. Setbacks applicable to the underlying zone shall apply to the flag lot.
(...)
f. If the use of a flag lot stem to access a lot is infeasible... access easement of a minimum 15-foot width across intervening property

Staff Finding 54: No flag lots are proposed. The criteria are not applicable.

8. Large lots or parcels.

Staff Finding 55: The partition proposal creates the maximum number of parcels allowed. No further division can be achieved under this zoning. The criteria are met.

C. Pedestrian and bicycle trails.
(…)
D. Transit Facilities
(...)

Staff Finding 56: The subject property is adjacent to Blankenship Road, which has existing bicycle facilities that are in compliance with the West Linn Transportation System Plan. Trimet Bus Route 154 travels down Blankenship Road, but does not have any transit stops near the subject property, nor are there adopted plans to provide one. The applicant is not required to install any improvements outside of required street improvements. The criteria are met.

E. Grading. Grading of building sites shall conform to the following standards unless physical conditions demonstrate the propriety of other standards:
1. All cuts and fills shall comply with the excavation and grading provisions of the Uniform Building Code
(...)
4. The proposed grading shall be the minimum grading necessary to meet roadway standards, and to create appropriate building sites, considering maximum allowed driveway grades.

Staff Finding 57: Staff incorporates the findings found on pages 12-13 in the applicant submittal (Exhibit PD-1). The applicant proposes minimum grading to the subject property and will use the natural slope of the site to terrace the homes down the slope from Parcel 1 to Parcel 3. The subject property meets the definition of Type IV Lands as greater than 50 percent of the site is less than 10 percent slope. No geologic report is required. The criteria are met.

5. Type I lands shall require a report submitted by an engineering geologist, and Type I and Type II lands shall require a geologic hazard report.
6. Per the submittals required by CDC 85.170(C)(3), the applicant must demonstrate that the proposed methods of rendering known or potential hazard sites safe for development, including proposed geotechnical remediation, are feasible and adequate to prevent landslides or other damage to property and safety. The review authority may impose conditions, including limits on type or intensity of land use, which it determines are necessary to mitigate known risks of landslides or property damage.

Staff Finding 58: The subject property is classified as Type IV Land as greater than 50 percent of the site is less than 10 percent slope. No geologic report is required. The criteria are met.

F. Water.

Staff Finding 59: Water is available in 13th Street to serve the proposed development. A registered civil engineer prepared the water provision plan. The City's public water system has sufficient capacity and pressure in this area. The criteria are met.

G. Sewer.

Staff Finding 60: The applicant has submitted a plan for all three proposed parcels to gravity flow to the existing sanitary sewer line 13th Street. The City public sanitary sewer system has

sufficient capacity to service the proposed use. The applicant shall comply with the requirements and install improvements to meet the West Linn Public Works Design Standards per Condition of Approval 2. Subject to the Conditions of Approval, the criteria are met.

H. Storm detention and treatment. All proposed storm detention and treatment facilities comply with the standards for the improvement of public and private drainage systems located in the West Linn Public Works Design Standards, there will be no adverse off-site impacts caused by the development (including impacts from increased intensity of runoff downstream or constrictions causing ponding upstream), and there is sufficient factual data to support the conclusions of the submitted plan.

Staff Finding 61: The applicant has submitted a Preliminary Stormwater Report, prepared by a licensed engineer, which complies with the West Linn Public Works Design Standards, shows no adverse off-site impacts, and provides sufficient factual data to support the conclusions of the plan. The applicant shall comply with the requirements and install improvements to meet the West Linn Public Works Design Standards per Condition of Approval 2. Subject to the Conditions of Approval, the criteria are met.

I. Utility Easements. Subdivisions and partitions shall establish utility easements to accommodate the required service providers as determined by the City Engineer. The developer of the subdivision shall make accommodation for cable television wire in all utility trenches and easements so that cable can fully serve the subdivision.

Staff Finding 62: The applicant will record a new eight-foot wide public utility easement adjacent to the proposal's entire frontages of Blankenship Road and 13th Street per Condition of Approval 4. Subject to the Conditions of Approval, the criteria is met.

J. Supplemental Provisions
1. Wetland and Natural Drainage Ways.
2. Willamette and Tualatin Greenways.
3. Street trees. Street trees are required as identified in the appropriate section of the municipal code and Chapter 54 CDC.
4. Lighting. All subdivision or alley lights shall meet West Linn Public Works Design Standards.

Staff Finding 63: The subject property contains no wetlands or natural drainageways. The subject property is not located in either the Willamette or Tualatin Greenways. Street trees and street lights will be installed per Public Works Standards and Condition of Approval 2. Subject to the Conditions of Approval, the criteria are met.

5. Dedications and exactions.
The City may require an applicant to dedicate land and/or construct a public improvement that provides a benefit to property or persons outside the property that is the subject of the application when the exaction is roughly proportional. No exaction shall be imposed unless

supported by a determination that the exaction is roughly proportional to the impact of development.

Staff Finding 64: Both Blankenship Road and 13th Street have sufficient right-of-way width to accommodate required street improvements. The proposal is in compliance with the City's Transportation System Plan and will not create impacts to existing off-site facilities that would trigger the need for improvements. The City's sanitary sewer and water systems have sufficient capacity to serve the site. The criteria are met.

6. Underground utilities.
All utilities…that may at times be above ground or overhead shall be buried underground in the case of new development. The exception would be in those cases where the area is substantially built out and adjacent properties have above-ground utilities and where the development site's frontage is under 200 feet and the site is less than one acre…

Staff Finding 65: The subject property does not have any adjacent, existing, overhead utility lines. The applicant is not required to underground existing utilities. This criteria is met.

7. Density requirement. Density shall occur at 70 percent or more of the maximum density allowed by the underlying zoning. These provisions would not apply when density is transferred from Type I and II lands as defined in CDC 02.030. Development of Type I or II lands are exempt from these provisions. Land divisions of three lots or less would also be exempt.
8. Mix requirement. The "mix" rule means that developers shall have no more than 15 percent of the R-2.1 and R-3 development as single-family residential. The intent is that the majority of the site shall be developed as medium high density multi-family housing.

Staff Finding 66: The subject property is 15,315 square feet. The property contains no Type I or II lands. The property is zoned Mixed-Use, which requires a minimum 4,500 square feet per parcel. The maximum number of parcels that can be created from the subject property is three (15,315/4,500), thus the proposal is for 100% of the maximum density. The "mix" rule does not apply. The criteria are met.

9. Heritage trees/significant tree and tree cluster protection.
All heritage trees, as defined in the Municipal Code, shall be saved. Diseased heritage trees, as determined by the City Arborist, may be removed at his/her direction. All non-heritage trees and clusters of trees (three or more trees with overlapping dripline; however, native oaks need not have an overlapping dripline) that are considered significant by virtue of their size, type, location, health, or numbers shall be saved pursuant to CDC 55.100(B)(2). Trees are defined per the municipal code as having a trunk six inches in diameter or 19 inches in circumference at a point five feet above the mean ground level at the base of the trunk.

Staff Finding 67: The subject property contains no heritage trees. The City Arborist identified three significant trees. The applicant proposes to remove all significant trees. Please see Staff Findings 17 to 20. The criteria are met.

VII. CHAPTER 92, REQUIRED IMPROVEMENTS
92.020 IMPROVEMENTS IN PARTITIONS
The same improvements shall be installed to serve each lot of a partition as are required of a subdivision. However, if the approval authority finds that the nature of development in the vicinity of the partition makes installation of some improvements unreasonable, at the written request of the applicant those improvements may be waived. If the street improvement requirements are waived, the applicant shall pay an in-lieu fee for off-site street improvements, pursuant to the provisions of CDC 85.200(A)(1).

In lieu of accepting an improvement, the Planning Director may recommend to the City Council that the improvement be installed in the area under special assessment financing or other facility extension policies of the City.

Staff Finding 68: The applicant proposes to install half-street improvements, which meet the City of West Linn Public Works Standards, on 13th Street adjacent to the subject property. The applicant will install the half-street improvements to meet the cross-section for a Local Street with Parking on One Side per the 2016 West Linn Transportation System Plan. Since the applicant has agreed to install the improvements, no nexus and proportionality analysis is required. The criteria are met.

PD-1 APPLICANT SUBMITTAL

City of West Linn
Planning & Development • 22500 Salamo Rd #1000 • West Linn, Oregon 97068
Telephone 503.656.4211 • Fax 503.656.4106 • westlinnoregon.gov

DEVELOPMENT REVIEW APPLICATION

For Office Use Only		
STAFF CONTACT: Darren Wyss	PROJECT NO(S).: DR-18-06 / MIP-18-06 / VAR-18-04	
NON-REFUNDABLE FEE(S): 2100 + 500 + 825	REFUNDABLE DEPOSIT(S): 2800	TOTAL: 6225

Type of Review (Please check all that apply):

- ☐ Annexation (ANX)
- ☐ Appeal and Review (AP) *
- ☐ Conditional Use (CUP)
- ☒ Design Review (DR) Class 1
- ☐ Easement Vacation
- ☐ Extraterritorial Ext. of Utilities
- ☐ Final Plat or Plan (FP)
- ☐ Flood Management Area
- ☐ Hillside Protection & Erosion Control
- ☐ Historic Review
- ☐ Legislative Plan or Change
- ☐ Lot Line Adjustment (LLA) */**
- ☒ Minor Partition (MIP) (Preliminary Plat or Plan)
- ☐ Non-Conforming Lots, Uses & Structures
- ☐ Planned Unit Development (PUD)
- ☐ Pre-Application Conference (PA) */**
- ☐ Street Vacation
- ☐ Subdivision (SUB)
- ☐ Temporary Uses *
- ☐ Time Extension *
- ☒ Variance (VAR) Class 1
- ☐ Water Resource Area Protection/Single Lot (WAP)
- ☐ Water Resource Area Protection/Wetland (WAP)
- ☐ Willamette & Tualatin River Greenway (WRG)
- ☐ Zone Change

Home Occupation, Pre-Application, Sidewalk Use, Sign Review Permit, and Temporary Sign Permit applications require different or additional application forms, available on the City website or at City Hall.

Site Location/Address:
1791 BLANKENSHIP ROAD

Assessor's Map No.:
Tax Lot(s):
Total Land Area:

Brief Description of Proposal: **3 NEW SINGLE FAMILY DETATCHED RESIDENCES. SITE WAS FORMERLY A SINGLE PARCEL WHICH WAS SUBDIVIDED INTO 3 INDUVIDUAL PARCELS.**

Applicant Name: (please print) **SEE OWNER BELOW**
Address:
City State Zip:
Phone:
Email:

RECEIVED
OCT 18 2018
PLANNING & BUILDING
CITY OF WEST LINN
TIME

Owner Name (required): (please print) **JEREMY BARNETT**
Address: **10220 SW VIEW TERRACE**
City State Zip: **TIGARD, OR 97224**
Phone: **(971) 404-5141**
Email: **localbarnett@gmail.com**

Consultant Name: (please print) **INTEGRATE ARCHITECTURE**
Address: **1919 N. KILPATRICK**
City State Zip: **PORTLAND, OR 97217**
Phone: **(503) 528-9899**
Email: **matt@integratearch.com; phil@integratearch.com**

1. All application fees are non-refundable (excluding deposit). **Any overruns to deposit will result in additional billing.**
2. The owner/applicant or their representative should be present at all public hearings.
3. A denial or approval may be reversed on appeal. No permit will be in effect until the appeal period has expired.
4. **Three (3) complete hard-copy sets (single sided) of application materials must be submitted with this application. One (1) complete set of digital application materials must also be submitted on CD in PDF format. If large sets of plans are required in application please submit only two sets.**

* No CD required / ** Only one hard-copy set needed

The undersigned property owner(s) hereby authorizes the filing of this application, and authorizes on site review by authorized staff. I hereby agree to comply with all code requirements applicable to my application. Acceptance of this application does not infer a complete submittal. All amendments to the Community Development Code and to other regulations adopted after the application is approved shall be enforced where applicable. Approved applications and subsequent development is not vested under the provisions in place at the time of the initial application.

Applicant's signature — Date: 10/18/18
Owner's signature **(required)** — Date: 10/18/18

INTEGRATE
ARCHITECTURE & PLANNING

June 11, 2018

PROJECT NARRATIVE

1791 BLANKENSHIP ROAD
WEST LINN, OREGON 97068

CHAPTER 38 ADDITIONAL YARD AREA REQUIRED; EXCEPTIONS TO YARD REQUIREMENTS; STORAGE IN YARDS; PROJECTIONS INTO YARDS

38.020 NO YARD REQUIRED; STRUCTURE NOT ON PROPERTY LINE

Not applicable. Side and rear yards setback required and shown on plans.

38.030 SETBACK FROM STREET CENTERLINE REQUIRED

Not applicable. The proposed site plan includes a dedication which provides a 50' ROW on 13th street.

Furthermore, the closest building feature on either of the 3 lots is approximately 38'-8". The minimum front setback is 12'. 12' + 25' = 37'

38.040 EXCEPTIONS TO YARD REQUIREMENTS

Not applicable.

38.050 STORAGE IN FRONT YARD

There is no anticipated storage of vehicles which obstruct vision and create a traffic hazard.

38.060 PROJECTIONS INTO REQUIRED YARDS

Typical eaves only project 18" from building. The typical covered porch wraps the side of the house and is fully open with no living space. The porch at parcel 1 overlaps the setback by about 7'. However, this porch is located on the Blankenship side of the lot, and is 8' lower than the grade at Blankenship. The 7' encroachment is imperceptible from anywhere but at the front driveway or approaching the entry. Furthermore, to build and gain access to the house, a retaining wall will need to be built at the edge of the porch. We will seek an adjustment for this setback condition.

CHAPTER 43

43.040 GENERAL PROVISIONS

A. No area of the distinct planes of side walls exceeds 700 s.f.

B. Sidewalls are less than 22’ high and are exempt from pop out requirements.
C. Exemptions
   4. East elevation of Parcel 1 is contiguous to non-buildable area. (+\- 8’ tall retaining wall and Blankenship Road ROW.
   5. The typical west elevation is 23’ high but has a gable facing the side lot line.

CHAPTER 48 ACCESS, EGRESS AND CIRCULATION

48.010 PURPOSE

48.020 APPLICABILITY AND GENERAL PROVISIONS

48.025 ACCESS CONTROL

Access control standards **-** Option 3
Access to all three lots is from 13th Street which is a local street. Parcel 1 is a corner lot on Blankenship (arterial) and 13th Street (local) is a lower classification than Blankenship. In addition, the lot is approximately 10-15’ lower in elevation than Blankenship and is bounded by a retaining wall. Thus, site access via a driveway is not even feasible from this frontage.

Number of Access points. Each site has one (1) access point. A shared driveway is provided for lots 1 and 2 per CDC comments.

48.030 MINIMUM VEHICULAR REQUIREMENTS FOR RESIDENTIAL USES

Providing a joint driveway with a 16’ wide driveway access.

48.040 MINIMUM VEHICLE REQUIREMENTS FOR NON-RESIDENTIAL USES

Not Applicable

48.050 ONE-WAY VEHICULAR ACCESS POINTS

Not Applicable

48.060 WIDTH AND LOCATION OF CURB CUTS AND ACCESS SEPARATION REQUIREMENTS

Curb Cut is shown as the minimum 16’ wide and shall be no larger than 36’ wide.

48.70 PLANNING DIRECTOR’S AUTHORITY TO RESTRICT ACCESS APPEAL PROVISIONS

No access appeal is anticipated.

48.080 BICYCLE AND PEDESTRIAN CIRCULATION

Not Applicable

CHAPTER 55 CLASS I DESIGN REVIEW

55.010 PURPOSE AND INTENT – GENERAL

55.020 CLASSES OF DESIGN REVIEW

This project will be reviewed as a Class 1 design review.

55.025 EXEMPTIONS

Not applicable.

55.030 ADMINISTRATION AND APPROVAL PROCESS

Pre-Application conference already took place.

55.040 EXPIRATION OR EXTENSION OF APPROVAL

If substantial construction has not occurred within three years from the date of approval of the development plan, the approved proposal will be void, unless an extension is granted

55.050 DESIGN REVIEW AMENDMENT TRIGGER

We do not anticipate any changes that would trigger a design review amendment.

55.060 STAGED OR PHASED DEVELOPMENT

At this time we do not anticipate staging or phasing the development.

55.070 SUBMITTAL REQUIREMENTS

Our submission includes:
1. Design Review Application and Fees
2. Pre-Application Conference (already took place)
3. Site Analysis
4. Site Plan
5. Grading Plan (deferred)
6. Architectural Drawings
7. Narrative

55.085 ADDITIONAL INFORMATION REQUIRED AND WAIVER OF REQUIREMENTS

Planning Director may waive certain, or impose additional, requirements.

55.090 APPROVAL STANDARDS – CLASS I DESIGN REVIEW

See 55.100 for response to specific design review criteria. B 1 through 4 address natural features while 5 and 6 address the built environment.

It is understood that the Director may require additional information and responses to additional sections of the approval criteria of this section depending upon the type of application.

Since there is a house located on the existing site, public utility infrastructure is in place. New utilities serving the two new partitioned lots will stub off these utilities where possible and allowed. Our survey identifies existing utilities in the ROW.

55.100 APPROVAL STANDARDS – CLASS II DESIGN REVIEW

1. According to the Street Tree Inventory Map there are no Heritage Trees on this site.

2. According to our site survey, we will need to remove 4 trees, 3 of which have been identified as significant by the arborist. Based on planning department recommendation, we analyzed the slopes of the existing topography. The site has the following approximate slopes and types:

   23% slope over 13% of the site
   9% slope over 60% of the site, Type IV (See A1.1a)
   31% slope over 17% of the site

   See plans for tree diameter and removal summary. No mitigation is required, however, owner will voluntarily plant some trees.

3. The existing topography and new grading of the site will maximize drainage away from the new homes.

4. According to the Landslide Vulnerability Analysis Map the site appears to be located within a Landslide Area, but the specific site itself is not at risk for Landslides. The site is well below (+/- 10') the street level at Blankenship and has a publicly improved sidewalk and retaining wall along the length of the site along Blankenship. The land upslope from the site is fully developed.

5. The site has been developed with 6' setbacks at the property lines. The distance between houses is at minimum 12', and in most cases the distance is closer to 20'

6. <u>Architecture</u>.

   Scale: the three proposed homes are almost identical to one another, so scale to one another is also relative. The scale is typical and appropriate to residential homes. However, due to the sloping site and street these homes, which are on elevated land compared to homes to the south. For example, the grade elevation of the lowest new parcel in our development is approximately 10' higher than that at the adjacent neighboring home.

   Transition, due to the site features mentioned above, are challenging at some locations. That said, the design of the proposed homes include transitions,

with the second floor set back from the first floor so the roof lines can ease the mass and volume relative to itself and the adjacent home.

Contrasting Style is only a consideration in that the materials in that are in use today will appear newer or more detailed. The style will remain highly residential in appearance.

There are many Human Scale features at use in this development. As mentioned above, the roof is scaled to be more relatable to people at the front of the lot. The garage door is at a human scaled height, and the porch steps are located at the front of the house, with the front door set back and on the side. The porch is also covered by a roof.

Roof variation, as mentioned above, is employed to address a number of criteria here. In addition, roof variation, or “roof bounce” as we have come to know it, is also achieved over the three parcels by the sloping topography and the space between the homes

Climatic features include the front walk/deck with roof coverage, and deck at the rear of the homes.

55.110 SITE ANALYSIS

The design package includes a scaled site plan with boundaries, dimensions, setbacks, and contours at 1’ intervals. The plans also include the proposed public ROW improvements and dedication.

Landslide area is addressed in 55.100.

There are no resource areas identified on the site.

There are no historical landmarks or archaeological sites identified on the site.

Approx. 60% of the lot is Type IV. See plans.

55.120 SITE PLAN

The site plan shall be at the same scale as the site analysis and shall show:

A. The applicant’s entire property and the surrounding property.

B. Boundary lines and dimensions for the perimeter of the properties.

C. There are no streams or stream corridors.

D. Identification information.

E. The location, dimensions, and names of streets, public pathways, easements, rights-of-way.

F. The location, dimensions and setback distances of all:
   1. Existing and proposed structures, improvements, and utility facilities on site; and

2. Existing structures and driveways on adjoining properties.

G. The location and dimensions of:

1. The entrances and exits to the site;
2. The parking and circulation areas;
3. Areas for waste disposal, recycling, loading, and delivery;
4. Pedestrian and bicycle routes, including designated routes, through parking lots and to adjacent rights-of-way;
5. On-site outdoor recreation spaces and common areas;
6. All utilities, including stormwater detention and treatment; and
7. Sign locations.

H. The location of areas to be landscaped.

55.125 TRANSPORTATION ANALYSIS

Not Applicable

55.130 GRADING AND DRAINAGE PLANS

Grading and drainage is in progress and is accounted for generally in the structural design of footings and stem walls. Due to the complexities of developing this site, we are not prepared to engage a civil engineer for a full grading plan until we have a better understanding of the City's position on key aspects of the project. We expect to submit a grading plan as a completeness item.

55.140 ARCHITECTURAL DRAWINGS

Not applicable.

55.150 LANDSCAPE PLAN

Not applicable.

55.170 EXCEPTIONS TO UNDERLYING ZONE, YARD, PARKING, SIGN PROVISIONS, AND LANDSCAPING PROVISIONS

Owner requests an exception to reduce side yard setbacks.

1. 20% reduction in setbacks is shown on the site plans. No minor exception required. 7.5' is the standard.
   7.5 x .8 = 6' minimum setbacks required. In many cases the setbacks are much greater than the minimum. See Site Plans.
2. Reduced setbacks makes for a more efficient development of the site due to the unusual constraints of the existing and proposed site ROW conditions and the topography of the site.
3. The setback reduction does not diminish the natural features of the site such as topography and vegetation. While 3 trees are to be removed for development,

there is a stand of trees along Blankenship that will remain. The topography will be graded for stormwater drainage and foundations, but will otherwise remain in place.

4. The size and scale of these homes are appropriate to the adjoining homes. The dimensions, orientation, setbacks, topography and vegetation all meet applicable codes and help mitigate impacts on light, air, noise, privacy and fire protection.
5. The development provides adequate vehicle and pedestrian access with more than adequate driveways and significant ROW improvements proposed.

55.180 MAINTENANCE

All on-site improvements shall be the ongoing responsibility of the property owner or occupant

55.190 SHARED OPEN SPACE

Not applicable.

55.195 ANNEXATION AND STREET LIGHTS

Not applicable.

CHAPTER 59 MIXED USE ZONING

59.010 PURPOSE

Provide for a transitional area between commercial and residential zones.

59.020 PROCEDURES AND APPROVAL PROCESS

Permitted Use.

59.030 PERMITTED USES

MU – Willamette Neighborhood Mixed Use Transitional Zone. Single Family detached dwellings are permitted outright in this zone.

59.040 ACCESSORY USES

Not Applicable. No Accessory Buildings are proposed.

59.050 USES AND DEVELOPMENT PERMITTED UNDER PRESCRIBED CONDITIONS

Not Applicable

59.060 CONDITIONAL USES

Not Applicable

59.070 DIMENSIONAL REQUIREMENTS, USES PERMITTED OUTRIGHT AND USES PERMITTED UNDER PRESCRIBED CONDITIONS

1. Front lot line length required is 35'. Parcel 1 is 37'. Parcel 2 is 45'. Parcel 3 is 38'.
2. Lots are irregular shapes. Width dimensions taken at front, midpoint, and rear and as shown on Plat Map
    a. Parcel 1 – 37' + 56' + 80' = 173' / 3 = 57.6'
    b. Parcel 2 – 45' + 51' + 56' = 152' / 3 = 50.66'
    c. Parcel 3 – 38' + 49' + 56' = 143' / 3 = 47.6
    d. Total for 3 Parcels = 155.86 / 3 lots = 51.9 avg. wd.
3. Lot depth for each lot is 97'. Minimum required is 90'.
4. Setbacks and building dimensions.
    a. Front yard – 12' min, 20' max. (20' to porch on plan)
    b. Interior Side Yard – 7.5' (varies on plan)
    c. Side yard abutting a street – 12' (provided)
    d. Rear Yard, shall conform to abutting Residential R2.1 zone R2.1 – 20' (provided)
    e. The building setbacks vary due to irregular lots, orientation and building footprint. Based on preliminary discussions with the West Linn planning department, we intend to seek a Class I Variance to the side setback criteria. All setbacks are at least 6' in width which is a 20% reduction to the 7.5' requirement.
5. Height of each unit is 24' measured from the level of the garage floor/porch approach to highest roof ridge. Highest grade is no more than 2' below the garage at any unit. 26' total at highest grade.
6. 6,000 s.f. max building area. No unit exceeds 2,000 s.f.

7. FAR not to exceed .40
    a. Parcel 1 – 1878 sf unit / 5603 sf lot = .33 FAR
    b. Parcel 2 – 1877 sf unit / 4954 sf lot = .37 FAR
    c. Parcel 3 – 1877 sf unit / 4696 sf lot = .39 FAR

8. Min lot sizes 4500 sf. See lots sizes above.

Design Standards (seem geared toward commercial development)

1. Residential-style building with single story porch on front and side.
2. New sidewalk construction shall be allowed to match the historical sidewalk standards in this zone. New sidewalk will align with existing at corner.
3. Off-street parking is provided within the garage.
4. Garages shall not extend any closer to the street than the street-facing facade of the house. The Garage is the street facing façade.
5. There is no illuminated outdoor advertising in this project.

59.080 ADDITIONAL USE REQUIREMENTS

Not Applicable. Commercial Uses

59.090 DIMENSIONAL REQUIREMENTS, CONDITIONAL USES

Not Applicable.

59.100 OTHER APPLICABLE DEVELOPMENT STANDARDS

Not Applicable

CHAPTER 75 CLASS I VARIANCE

1. Required Yard and Minimum Lot Dimensional Requirements. Required yards may be modified up to 20 percent, lot dimensions by up to 10 percent and lot area by up to five percent if the decision-making authority finds that the resulting approval:
   a. Provides for a more efficient use of the site;
   b. Preserves and incorporates natural features into the overall design of the project;
   c. Does not adversely affect adjoining properties in terms of light, air circulation, noise levels, privacy, and fire hazards; and
   d. Provides for safe vehicular and pedestrian access to the site and safe on-site vehicular and pedestrian circulation.

4. Landscaping requirements in the applicable zone may be modified up to 10 percent if the decision-making authority finds that the resulting approval:
   a. Provides for a more efficient use of the site;
   b. Preserves and incorporates natural features into the overall design of the project; and
   c. Will have no adverse effect on adjoining property.

CHAPTER 85 MINOR PARTITION REQUIREMENTS

85.010 PURPOSE

85.020 SCOPE – CONFORMITY REQUIRED

Partition Plat Draft prepared and submitted with LU drawing package.

85.030 SALE OR NEGOTIATION TO SELL LOT OR PARCEL PRIOR TO APPROVAL OF TENTATIVE PLAN

No sales of lots are expected until LU approvals are finalized

85.040 REPEALED

85.050 APPROVAL REQUIRED BEFORE CREATING STREET OR ROAD TO PARTITION LAND

Not Applicable

85.060 INCOMPLETE APPLICATIONS – DECISION-MAKING PERIOD

Applicant will be notified within 30 days of an incomplete application and will be allowed to submit required information. Final action is expected within 120 days.

85.070 ADMINISTRATION AND APPROVAL PROCESS

Owner must authorize and validate ownership with the City. The Planning Director and City Engineer's decision may be appealed to the City Council.

85.080 SUBSTANTIAL DEVIATION FROM APPROVED PLAN PROHIBITED

Final Plat shall be in substantial conformance with the tentative plan.

85.085 SUBDIVISION/PARTITION AMENDMENT TRIGGER

Not Applicable

85.090 EXPIRATION OR EXTENSION OF APPROVAL

The final plat map shall be submitted to the Planning Director and recorded with the County within three years from the date of approval of the tentative plan. If not approved within that time-period, the approval expires.

85.100 NON-COMPLIANCE – BOND

Non-compliance with an approved final plat shall be a violation of this code.

The approved work shall be completed in accordance with the approved final plat before any permits are issued. Exceptions may be made due to climatic conditions, unavailability of materials, or other temporary conditions. A performance bond may be required to guarantee completion at a time certain not to exceed one year.

85.110 STAGED DEVELOPMENT

This project will likely be phased. It is understood that the final plat will need to be filed after 5 years, otherwise the project will need to be re-filed.

85.120 PARTIAL DEVELOPMENT

Not Applicable. Entire site in current scope of work.

85.130 LAND DIVISION APPLICATION IN CONJUNCTION WITH OTHER LAND USE APPLICATIONS

Not Applicable.

85.140 PRE-APPLICATION CONFERENCE REQUIRED

Already took place.

85.150 APPLICATION – TENTATIVE PLAN

This application submission includes:
1. Application forms
2. Tentative Plans and supplemental drawings to original scale and at 11x17 size and corresponding digital files. Additional copies may be required.
3. Narrative.

85.160 SUBMITTAL REQUIREMENTS FOR TENTATIVE PLAN

All included in drawing package:
A. City-wide map to identify the site. Vicinity map with ¼ mile radius.
B. Preliminary Plat Map.
C. Site Partition Plan provided.
D. All relevant and customary information is included in the drawings.
E. All relevant and customary Survey information is included in the drawings.
F. All proposed new work in the right-of-way, and the associated construction mitigation measures are provided in the drawings including:
    a. New curb-tight sidewalk
    b. Improvements to the accessible ramp.
    c. Parcel dimensions and boundaries.

85.170 SUPPLEMENTAL SUBMITTAL REQUIREMENTS FOR TENTATIVE SUBDIVISION OR PARTITION PLAN

Not Applicable.

85.180 REDIVISION PLAN REQUIREMENT

Not Applicable.

85.190 ADDITIONAL INFORMATION REQUIRED AND WAIVER OF REQUIREMENTS

A. The Planning Director may require additional information as part of the application subject to the provisions of CDC 99.035(A).

A. The applicant may request a waiver of any requirements for the application subject to the provisions of CDC 99.035(B) and (C).

85.200 APPROVAL CRITERIA

No new streets proposed.

A. Streets
    1. 13th Street width is substandard.
    2. Right of way width has been determined to be 50'.
    3. Street widening and sidewalk improvements are necessary. 13th is a local street with parking on one-side. It requires 28 feet of pavement width (two 10 ft. travel lanes, 8 ft. parking). A survey will be required to confirm widths/distances, but it appears the street is currently about 24 feet wide, meaning an additional 4 feet of width would be needed plus the

curb/sidewalk. Drawing A1.1 shows roadway widening and sidewalk re-alignment proposed.

4. Right of way width - City Engineer's recommendations
5. Street Width – City Engineer's recommendations.
6. Reserve Strips – Not Applicable.
7. Alignment – Existing
8. Future Street expansion – Not Applicable
9. Intersection angles – Not Applicable
10. Additional right of way for existing streets – Proposed Partition Plan and Site Plan (A1.1) indicates additional Right-of-Way is possible without adjustment to street frontage property lines.
11. Cul-de-Sacs – Not Applicable
12. Street Names – Not Applicable
13. Grades and curves – Grade is existing. Sidewalk realignment is adjacent to existing curve.
14. Street Access – Not applicable. Existing.
15. Alleys – Not Applicable.
16. Sidewalks – The existing Right-of-way of 50' and the location of the street centerline (30' east, 20' west) allows for required street and sidewalk width but only allows 4' (6' required) for the Planter strip. We seek approval for the 4' width.
17. See 16.
18. No dedication anticipated.
19. All lots access public street.
20. Gated Streets – Not applicable.
21. Entryway treatments and aisle design. – Not applicable.
22. Off site improvements to be determined after survey of conditions as by City of West Linn.

B. Blocks and Lots
   1. General.
   2. Block size – Not Applicable
   3. Lot Size and shape – Partitioned lot shapes are irregular due to the topography and location of the site. Sizes are proportional and appropriate to neighboring properties. Minimum frontages are met.
   4. Access – Requirements met
   5. Double frontage lots – Not Applicable
   6. Lot and parcel side lines – Due to the irregular lot shape and topography, the lot sidelines were prepared to make best use of the site and the resulting lots.
   7. Flag Lots – Not Applicable
   8. Large Lots or Parcels – no further sub-division is anticipated.

C. Pedestrian and Bicycle trails – Not Applicable

D. Transit Facilities – No new transit facilities, or upgrades to existing transit facilities, is anticipated.

E. Grading
   1. Existing and proposed grading is indicated on A1.1 and A1.4 and do not exceed 50% for fill and 67% for cut.
   2. Since there is a house existing on the site, it is anticipated that soil characteristics are expected to be suitable for development.

3. There is one lpcation at the porch of parcel 1 where a retaining wall will be required for cut in excess of 4'. Floor levels were planned to minimize cut and fill. We do not anticipate cuts above 4' elsewhere. New fill in excess of 4' is retained by structural retaining/stem walls.

F. Water –
G. Sewer - Public sewer exists and is supplied to existing house. Two new laterals will be required for the two parcels not yet served. Depth of public sewer line needs to be verified, but based on topography and proposed floor elevations, slope appears adequate for gravity sewers.
H. Storm detention and treatment – Rain gardens are proposed to handle stormwater. Summary is located on A1.1.
I. Utility easements – none anticipated at this time.
J. Supplemental Provisions
   1. Wetlands and natural drainage ways – Not Applicable
   2. Willamette and Tualatin Greenways – Not Applicable
   3. Street Trees – 54.020-E excludes single family development. Not Applicable.
   4. Lighting - No new street lights are proposed at this time.
   5. Dedications and exactions – Not Applicable
   6. Underground Utilities – Utilities shall be provided underground, unless utilities recommend otherwise.
   7. Density requirements – Land divisions of three lots or less are exempt. Not applicable.
   8. Mix – Not applicable
   9. Arborist identified 3 significant trees in building footprint that need to be removed. No mitigation is required, but Owner will voluntarily plant some trees.

85.210 PROPERTY LINE ADJUSTMENTS – APPROVAL STANDARDS

1. Not Applicable

WDY Structural • Civil Engineers

STORM DRAIN CALCULATIONS

FOR

PRIVATE STORMWATER SYSTEM

AT

1791 Blankenship Road
West Linn, OR 97068
Parcel 1

March 11, 2019

TABLE OF CONTENTS/INCLUSIONS:

Storm Drain Narrative:.....**STM-1 to STM-2**
Project Area Map:.....**STM-3**
Planter Details:.....**STM-4 to STM-6**
PAC Print Outs:.....**STM-7 to STM-10**
Storm Pipe Conveyance Calculations:.....**STM-11 to STM-12**

6443 SW Beaverton-Hillsdale Hwy, suite 210 • Portland, OR 97221 • ph: 503.203.8111 • fx: 503.203.8122 • www.wdyi.com

WDY **Structural • Civil Engineers** **Civil Memo**

March 11, 2019

To: Jeremy Barnett
15112 Quarry Road
Lake Oswego OR

RE: **Residential Roof Storm Treatment Only System**
1791 Blankenship Road, Parcel 1
West Linn, Oregon 97068

WDY, Inc. has been asked to provide Civil analysis and details for the construction of a new "Roof Water Only" storm mitigation system for the roof storm runoff for a new single family residence at Parcel 1 at 1791 Blankenship Road.

The site is currently a single family house with no known existing storm treatment or detention facilities. The existing site will be partitioned into three lots: Parcel 1, Parcel 2 and Parcel 3, with each parcel containing similarly sized homes. The site is relatively flat at the northeast, and becomes steeper towards the southwest. There is an existing storm only main in 13th Street and it is assumed that it is available and has enough depth to connect into.

Per the Geotechnical infiltration report, the infiltration rate of the site is 2 inches/hour. This number is typically the minimum needed for infiltration. However, due to the layout of the site, required setbacks and required easements, a total onsite infiltration facility is not practical at this site.

WDY has contacted and discussed with the City of West Linn about the project site conditions, and it is our understanding that the proposed residence requires a stormwater quality treatment, and if the site will create less than 5,000 square feet of new impervious area, storm water detention is not required. The City of West Linn follows the City of Portland Stormwater Management Manual to size and design the storm facilities.

The proposed storm mitigation is to provide a flow-thru vegetated storm treatment only planter for the roof water runoff, with overflow to the existing storm only main in 13th Street. The onsite planter was sized using the City of Portland's Presumptive Approach Calculator (PAC). To adjust for the difference in rainfall intensities from Portland to West Linn, the treatment facility must add 25% of the PAC calculated area. The storm planter must be lined at the bottom and sides with a 30 mil impervious liner to conform with minimum setback requirements from property lines and buildings.

Onsite residential roof only impervious area = approximately 1,400 square feet.
Per the PAC, the minimum planter bottom area = 25 SF, with a storage depth of 6 inches.
Adjusting to West Linn, minimum planter bottom area = 25 SF x 1.25 = 32 SF minimum

Storm pipes to the planter shall be at minimum 4" diameter ductile iron pipe at 0.9% slope. Storm pipes exiting the planter shall be at minimum 4" dia. PVC ASTM D-3034, SDR-35 pipe at 0.9% min slope. The storm water collected from the foundation drain may connect to the 4" diameter pipe leaving the storm planter.

Included in this packet are details for the planter and planter walls at landscape and driveway sections. Also included are conveyance calculations for the 4" diameter pipe entering and leaving the planter.

Planter locations may vary to fit the site, as long as the planter bottom area is at minimum 32 square feet and the minimum requirements of the details provided are followed.

These calculations and details are for treatment design of roof water only. Exact location and depth of existing public storm pipe to be field verified.

LIMITATIONS

This letter is not intended to identify all conditions that may affect proposed conditions or proposed additions at this site. This analysis is based on information provided by the owner and review of digital map documentation and discussions with the owner. WDY work is for design and detail only. All Geotechnical information is to be provided by others. WDY, Inc. provides no warranty or guarantee either expressed or implied. This analysis and detail is an instrument of service and shall not be copied or distributed to others without the authorization of WDY, Inc.

Sincerely,

Kari Kuboyama, P.E.
WDY INC.

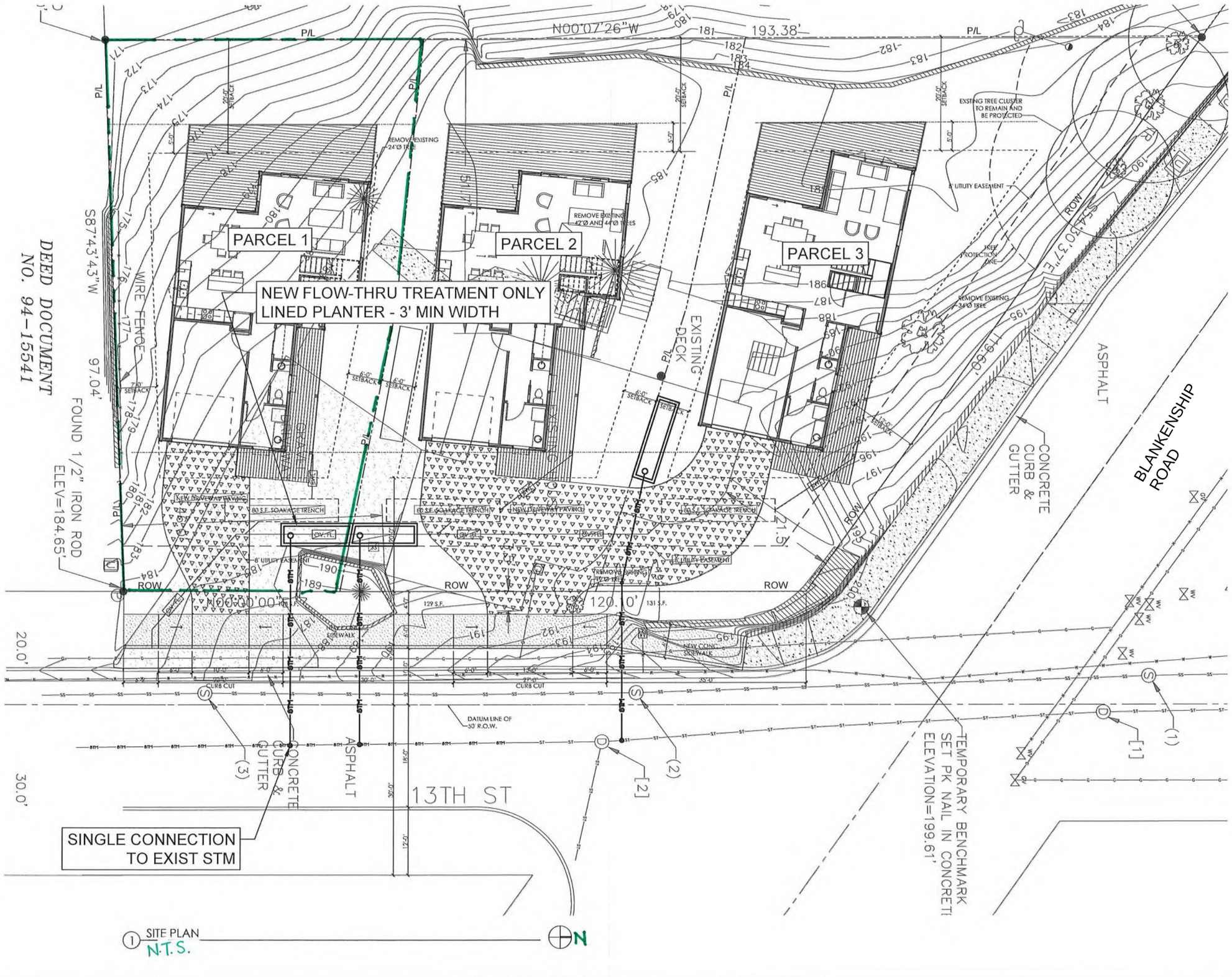

① SITE PLAN
N.T.S.

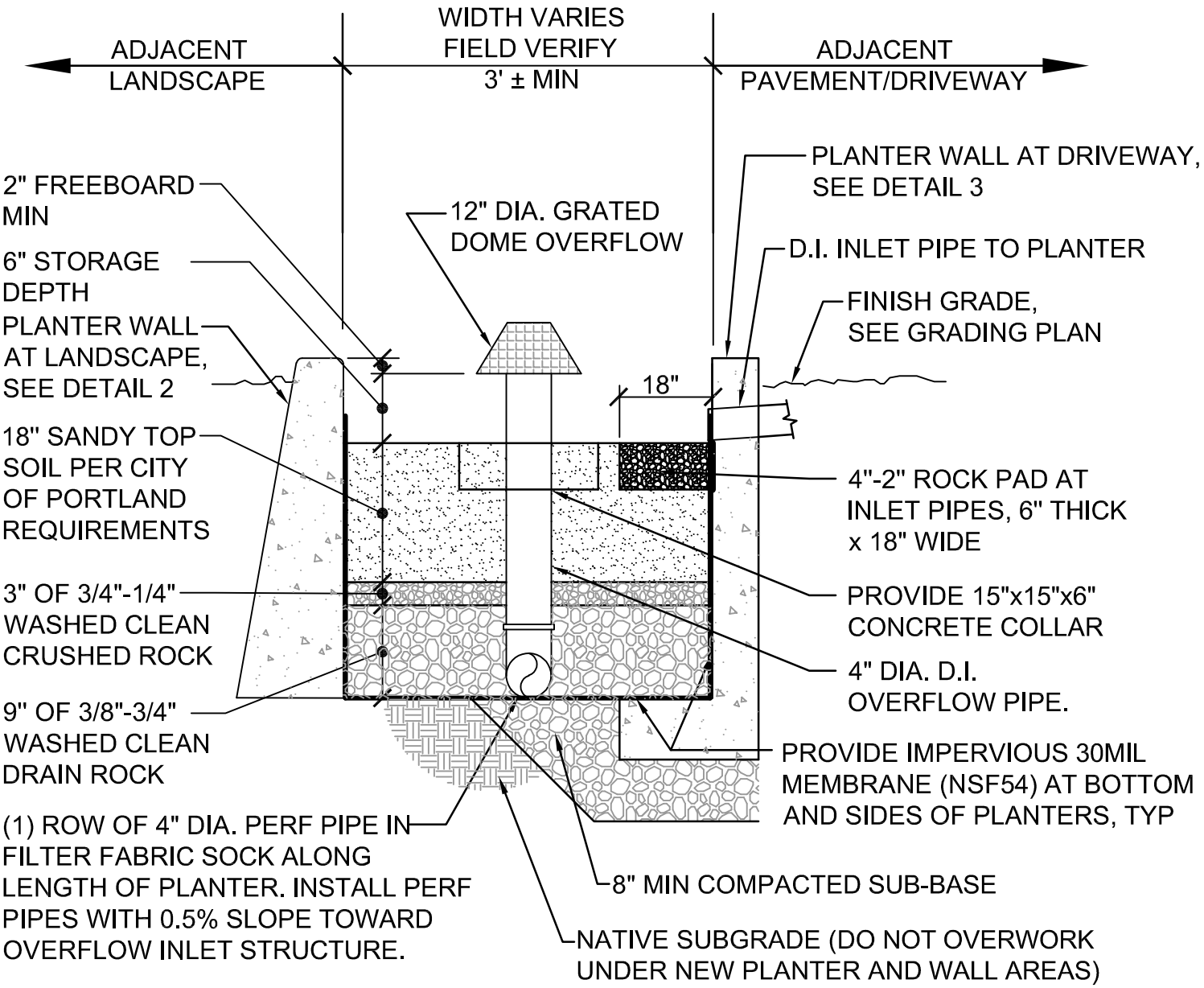

1 TYPICAL STORM WATER TREATMENT PLANTER

STM-1 N.T.S.

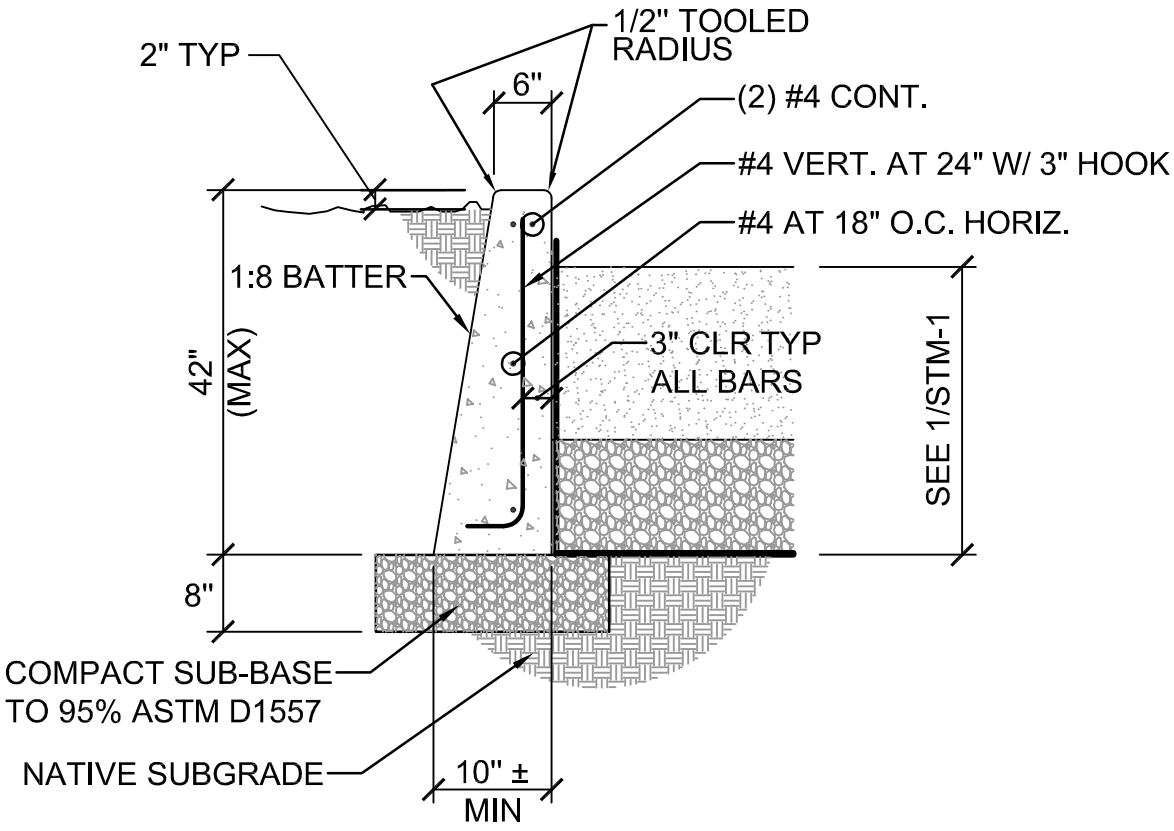

2 PLANTER WALL AT LANDSCAPE

STM-1

N.T.S.

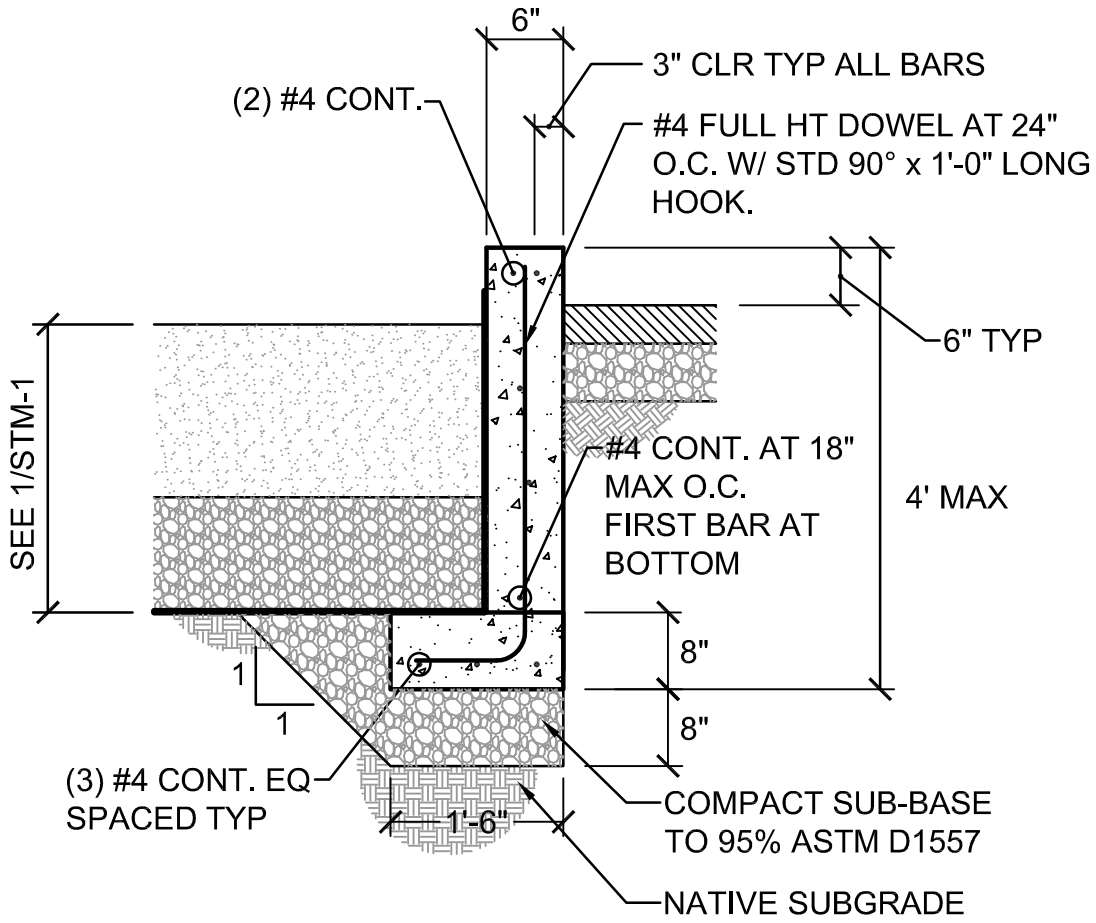

3 PLANTER WALL AT DRIVEWAY

STM-1 N.T.S.

Presumptive Approach Calculator ver. 1.2

Catchment Data

Catchment ID: 1

Project Name: West Linn 1
Project Address: Blankenship Road
Date: 02/25/19
Permit Number:

Run Time 2/25/2019 10:29:53 AM

Designer: kk
Company: WDY

Drainage Catchment Information

Catchment ID	1	
	Catchment Area	
Impervious Area	1,400	SF
Impervious Area	0.03	ac
Impervious Area Curve Number, CN_{imp}	98	
Time of Concentration, Tc, minutes	5	min.

Site Soils & Infiltration Testing Data

Infiltration Testing Procedure:	Open Pit Falling Head	
Native Soil Field Tested Infiltration Rate (I_{test}):	2	in/hr
Bottom of Facility Meets Required Separation From High Groundwater Per BES SWMM Section 1.4:	Yes	

Correction Factor Component

CF_{test} (ranges from 1 to 3)	2	

Design Infiltration Rates

I_{dsgn} for Native (I_{test} / CF_{test}):	1.00	in/hr
I_{dsgn} for Imported Growing Medium:	2.00	in/hr

Execute SBUH Calculations

SBUH Results

	Peak Rate (cfs)	Volume (cf)
PR	0.006	73
2-yr	0.02	253
5-yr	0.024	311
10-yr	0.028	369
25-yr	0.033	428

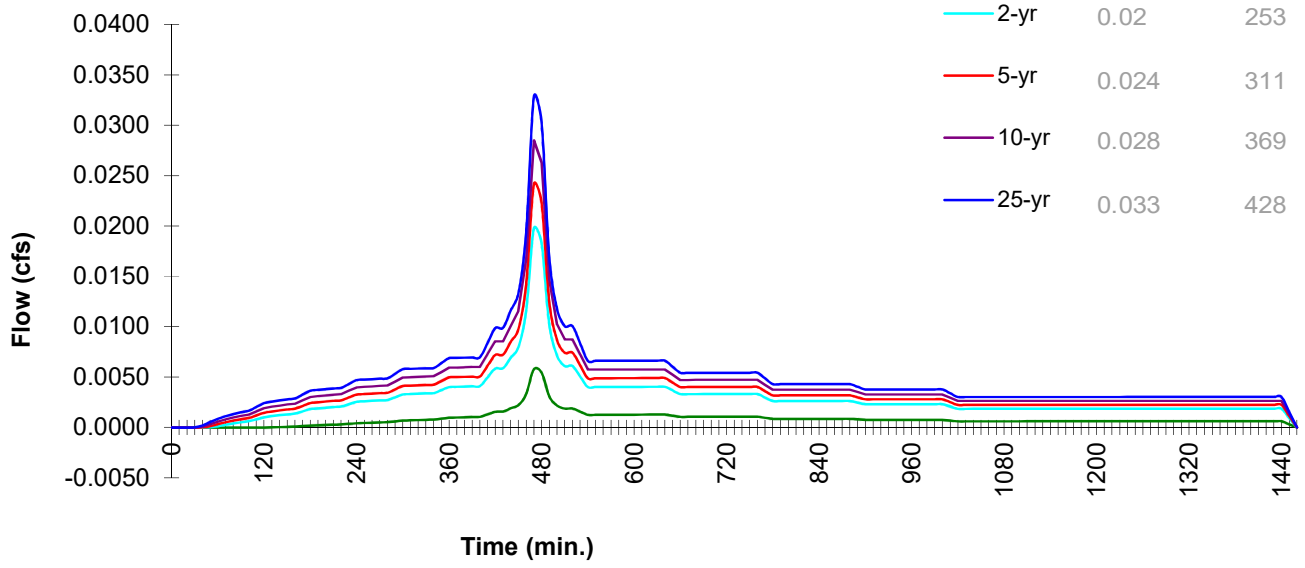

Presumptive Approach Calculator ver. 1.2

Catchment ID: 1

Run Time 2/26/2019 3:24:19 PM

Project Name: West Linn 1 **Catchment ID:** 1 **Date:** 2/25/2019

Instructions:

1. Identify which Stormwater Hierarchy Category the facility.
2. Select Facility Type.
3. Identify facility shape of surface facility to more accurately estimate surface volume, except for Swales and sloped planters that use the PAC Sloped Facility Worksheet to enter data.
4. Select type of facility configuration.
5. Complete data entry for all highlighted cells.

Catchment facility will meet Hierarchy Category: **3**

Goal Summary:

Hierarchy Category	SWMM Requirement	RESULTS box below needs to display…	
		Pollution Reduction as a	10-yr (aka disposal) as a
3	Off-site flow to drainageway, river, or storm-only pipe system.	PASS	N/A

Facility Type = Planter (Flat)

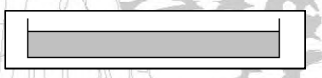

Facility Shape: Rectangle/Square **Facility Configuration:** D

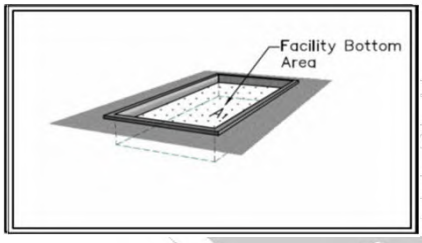

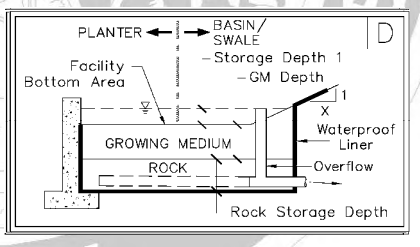

Calculation Guide
Max. Rock Stor. Bottom Area 25 SF

DATA FOR ABOVE GRADE STORAGE COMPONENT

Facility Bottom Area =	25	sf
Bottom Width =	5.0	ft
Facility Side Slope =	0	to 1
Storage Depth 1 =	6	in
Growing Medium Depth =	18	in
Freeboard Depth =	N/A	in
Surface Capacity at Depth 1 =	13	cf
GM Design Infiltration Rate =	2.00	in/hr
Infiltration Capacity =	0.001	cfs

BELOW GRADE STORAGE

Rock Storage Capacity =		cf
Native Design Infiltration Rate =		in/hr
Infiltration Capacity =		cfs

RESULTS

Pollution Reduction	Overflow Volume		
PASS	0 CF	95%	Surf. Cap. Used

Run PAC

Output File

	2-yr	5-yr	10-yr	25-yr
Peak cfs	0.020	0.024	0.028	0.033

FACILITY FACTS

Total Facility Area Including Freeboard =	25 SF
Sizing Ratio (Total Facility Area / Catchment Area) =	0.018

BES - Presumptive Approach Calculator - Ver 1.2

PR Con-D

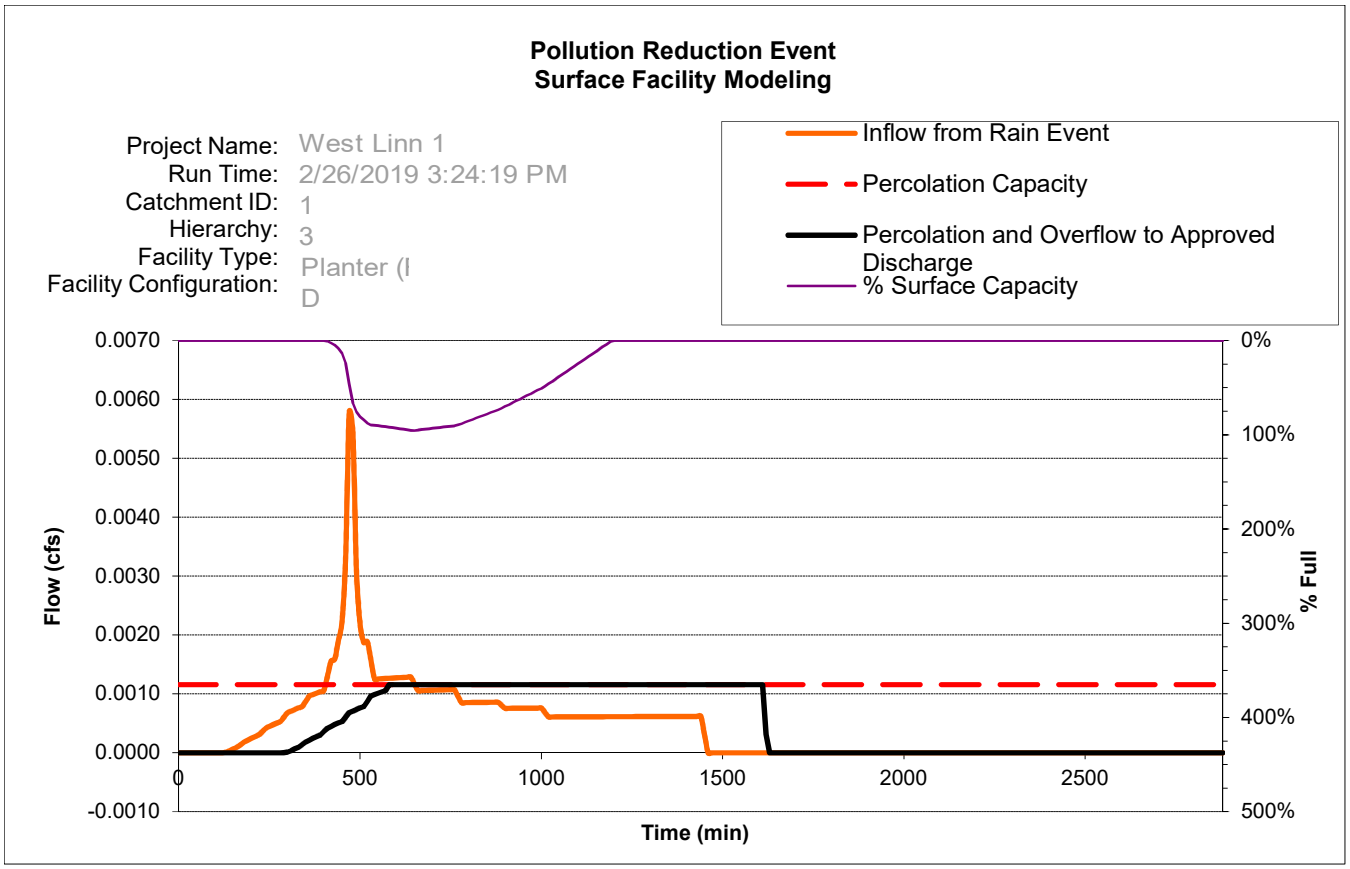

BES - Presumptive Approach Calculator - Ver 1.2

Output Chart

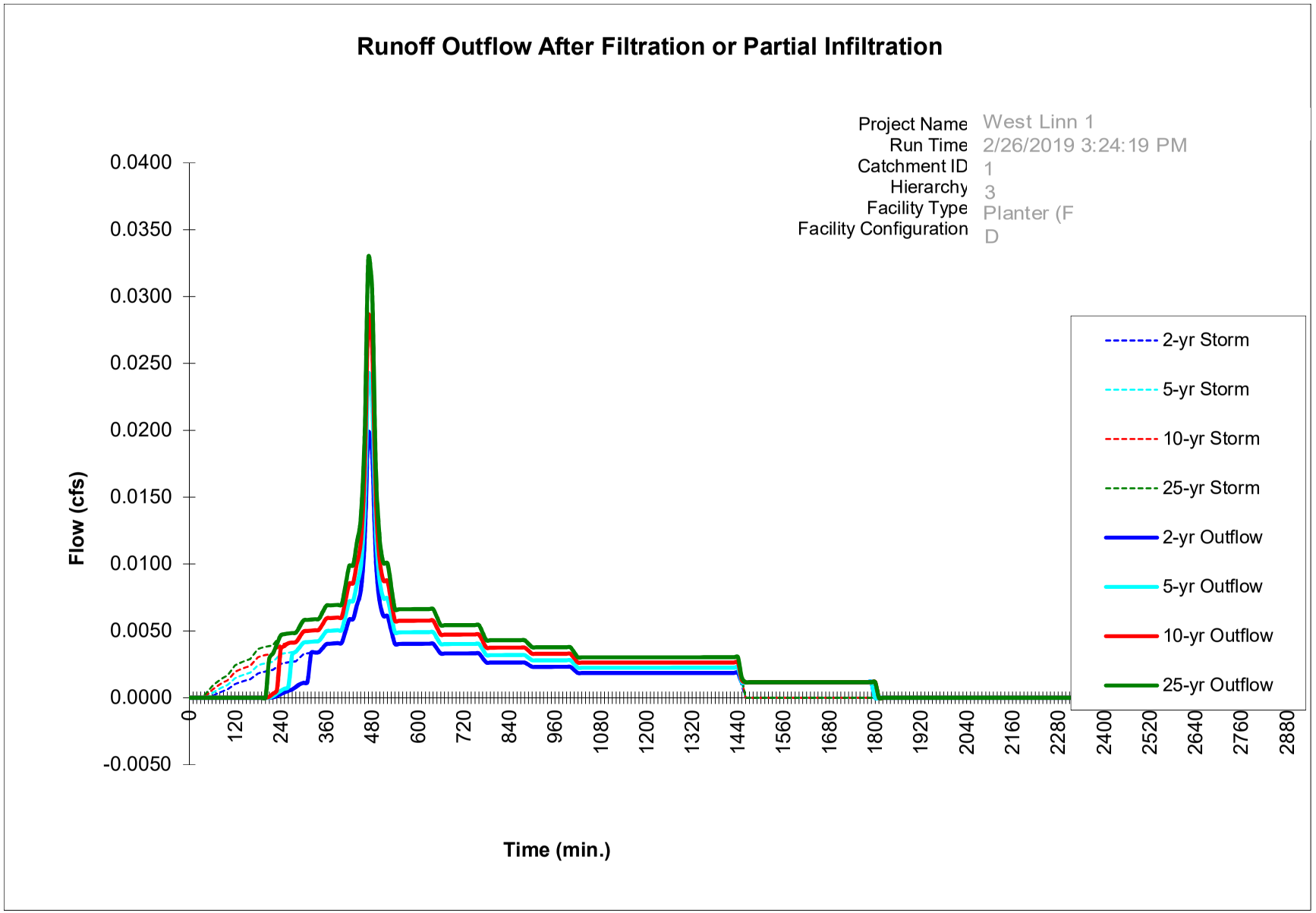

CONVEYANCE CALCULATIONS

- Using 3.90” for the 25 year, 24 hour storm, the peak flow is 0.03 cfs.
- Pipe Capacity Equation
  - $Q_{max} = \frac{1.486 \times A \times R^{2/3} \times S^{1/2}}{n}$
  - A = Area; R = Hydraulic Radius; S = Slope; n = Manning’s Roughness Coefficient
- 4” dia. storm from roof to planter at 0.9% slope
  where n = 0.013, A = 0.087 sf, R = 0.083 ft, S = 0.005
  Q_{max} = 0.174 cfs > Q_{25} = 0.03 cfs OK

chamber sizing- 19005 *Type IA 24-hr 25 yr Rainfall=3.90"*
Prepared by {enter your company name here} Printed 3/5/2019
HydroCAD® 10.00 s/n 07105 © 2011 HydroCAD Software Solutions LLC

Summary for Subcatchment 3E: Roof Area - Parcel 1

Runoff = 0.03 cfs @ 7.88 hrs, Volume= 0.010 af, Depth= 3.67"

Runoff by SBUH method, Split Pervious/Imperv., Time Span= 0.00-26.00 hrs, dt= 0.01 hrs
Type IA 24-hr 25 yr Rainfall=3.90"

	Area (sf)	CN	Description
*	1,400	98	Impervious
	1,400	98	100.00% Impervious Area

Tc (min)	Length (feet)	Slope (ft/ft)	Velocity (ft/sec)	Capacity (cfs)	Description
5.0					**Direct Entry, Post Developed**

WDY Structural • Civil Engineers

STORM DRAIN CALCULATIONS

FOR

PRIVATE STORMWATER SYSTEM

AT

1791 Blankenship Road
West Linn, OR 97068
Parcel 2

March 11, 2019

TABLE OF CONTENTS/INCLUSIONS:

Storm Drain Narrative:.....**STM-1 to STM-2**
Project Area Map:.....**STM-3**
Planter Details:.....**STM-4 to STM-6**
PAC Print Outs:.....**STM-7 to STM-10**
Storm Pipe Conveyance Calculations:..... **STM-11 to STM-12**

6443 SW Beaverton-Hillsdale Hwy, suite 210 • Portland, OR 97221 • ph: 503.203.8111 • fx: 503.203.8122 • www.wdyi.com

WDY **Structural • Civil Engineers** **Civil Memo**

March 11, 2019

To: Jeremy Barnett
15112 Quarry Road
Lake Oswego OR

RE: **Residential Roof Storm Treatment Only System**
1791 Blankenship Road, Parcel 2
West Linn, Oregon 97068

WDY, Inc. has been asked to provide Civil analysis and details for the construction of a new "Roof Water Only" storm mitigation system for the roof storm runoff for a new single family residence at Parcel 2 at 1791 Blankenship Road.

The site is currently a single family house with no known existing storm treatment or detention facilities. The existing site will be partitioned into three lots: Parcel 1, Parcel 2 and Parcel 3, with each parcel containing similarly sized homes. The site is relatively flat at the northeast, and becomes steeper towards the southwest. There is an existing storm only main in 13th Street and it is assumed that it is available and has enough depth to connect into.

Per the Geotechnical infiltration report, the infiltration rate of the site is 2 inches/hour. This number is typically the minimum needed for infiltration. However, due to the layout of the site, required setbacks and required easements, a total onsite infiltration facility is not practical at this site.

WDY has contacted and discussed with the City of West Linn about the project site conditions, and it is our understanding that the proposed residence requires a stormwater quality treatment, and if the site will create less than 5,000 square feet of new impervious area, storm water detention is not required. The City of West Linn follows the City of Portland Stormwater Management Manual to size and design the storm facilities.

The proposed storm mitigation is to provide a flow-thru vegetated storm treatment only planter for the roof water runoff, with overflow to the existing storm only main in 13th Street. The onsite planter was sized using the City of Portland's Presumptive Approach Calculator (PAC). To adjust for the difference in rainfall intensities from Portland to West Linn, the treatment facility must add 25% of the PAC calculated area. The storm planter must be lined at the bottom and sides with a 30 mil impervious liner to conform with minimum setback requirements from property lines and buildings.

Onsite residential roof only impervious area = approximately 1,400 square feet.
Per the PAC, the minimum planter bottom area = 25 SF, with a storage depth of 6 inches.
Adjusting to West Linn, minimum planter bottom area = 25 SF x 1.25 = 32 SF minimum

Storm pipes to the planter shall be at minimum 4" diameter ductile iron pipe at 0.9% slope. Storm pipes exiting the planter shall be at minimum 4" dia. PVC ASTM D-3034, SDR-35 pipe at 0.9% min slope. The storm water collected from the foundation drain may connect to the 4" diameter pipe leaving the storm planter.

Included in this packet are details for the planter and planter walls at landscape and driveway sections. Also included are conveyance calculations for the 4" diameter pipe entering and leaving the planter.

Planter locations may vary to fit the site, as long as the planter bottom area is at minimum 32 square feet and the minimum requirements of the details provided are followed.

These calculations and details are for treatment design of roof water only. Exact location and depth of existing public storm pipe to be field verified.

LIMITATIONS

This letter is not intended to identify all conditions that may affect proposed conditions or proposed additions at this site. This analysis is based on information provided by the owner and review of digital map documentation and discussions with the owner. WDY work is for design and detail only. All Geotechnical information is to be provided by others. WDY, Inc. provides no warranty or guarantee either expressed or implied. This analysis and detail is an instrument of service and shall not be copied or distributed to others without the authorization of WDY, Inc.

Sincerely,

Kari Kuboyama, P.E.
WDY INC.

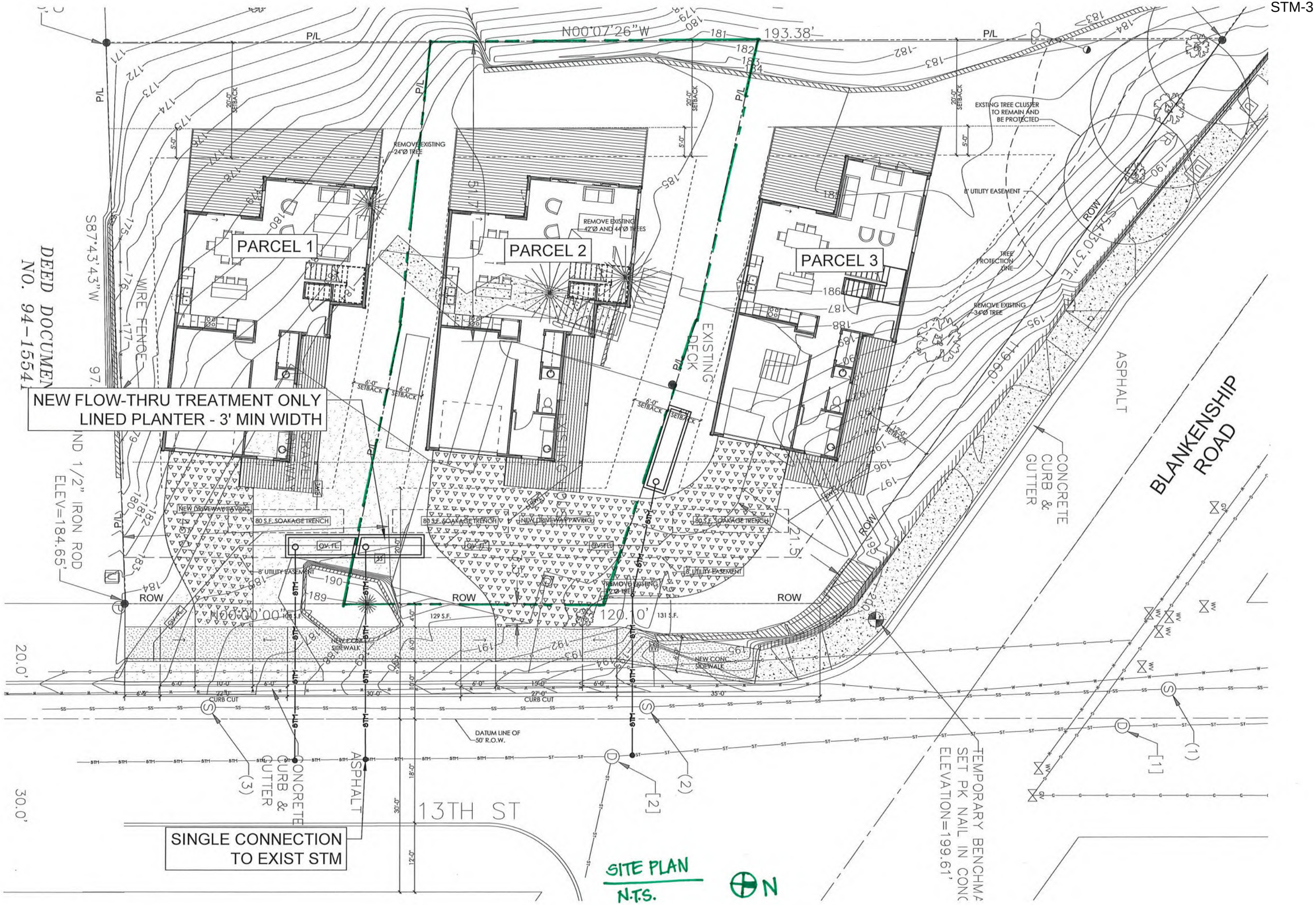
PARCEL 1
PARCEL 2
PARCEL 3
NEW FLOW-THRU TREATMENT ONLY
LINED PLANTER - 3' MIN WIDTH
SINGLE CONNECTION
TO EXIST STM
BLANKENSHIP ROAD
13TH ST
ASPHALT
CONCRETE CURB & GUTTER
EXISTING DECK
WIRE FENCE
DEED DOCUMEN
NO. 94-1554
N00°07'26"W
193.38'
S87°43'43"W
S54°30'37"E
119.60'
N00°00'00"
120.10'
21.5'
20.0'
30.0'
P/L
ROW
EXSTING TREE CLUSTER TO REMAIN AND BE PROTECTED
8' UTILITY EASEMENT
TREE PROTECTION LINE
REMOVE EXISTING 24"Ø TREE
REMOVE EXISTING 42"Ø AND 44"Ø TREES
REMOVE EXISTING 34"Ø TREE
NEW DRIVEWAY PAVING
80 S.F. SOAKAGE TRENCH
NEW CONC. SIDEWALK
CURB CUT
DATUM LINE OF 50' R.O.W.
TEMPORARY BENCHMA
SET PK NAIL IN CONC
ELEVATION=199.61'
SITE PLAN
N.T.S.
N

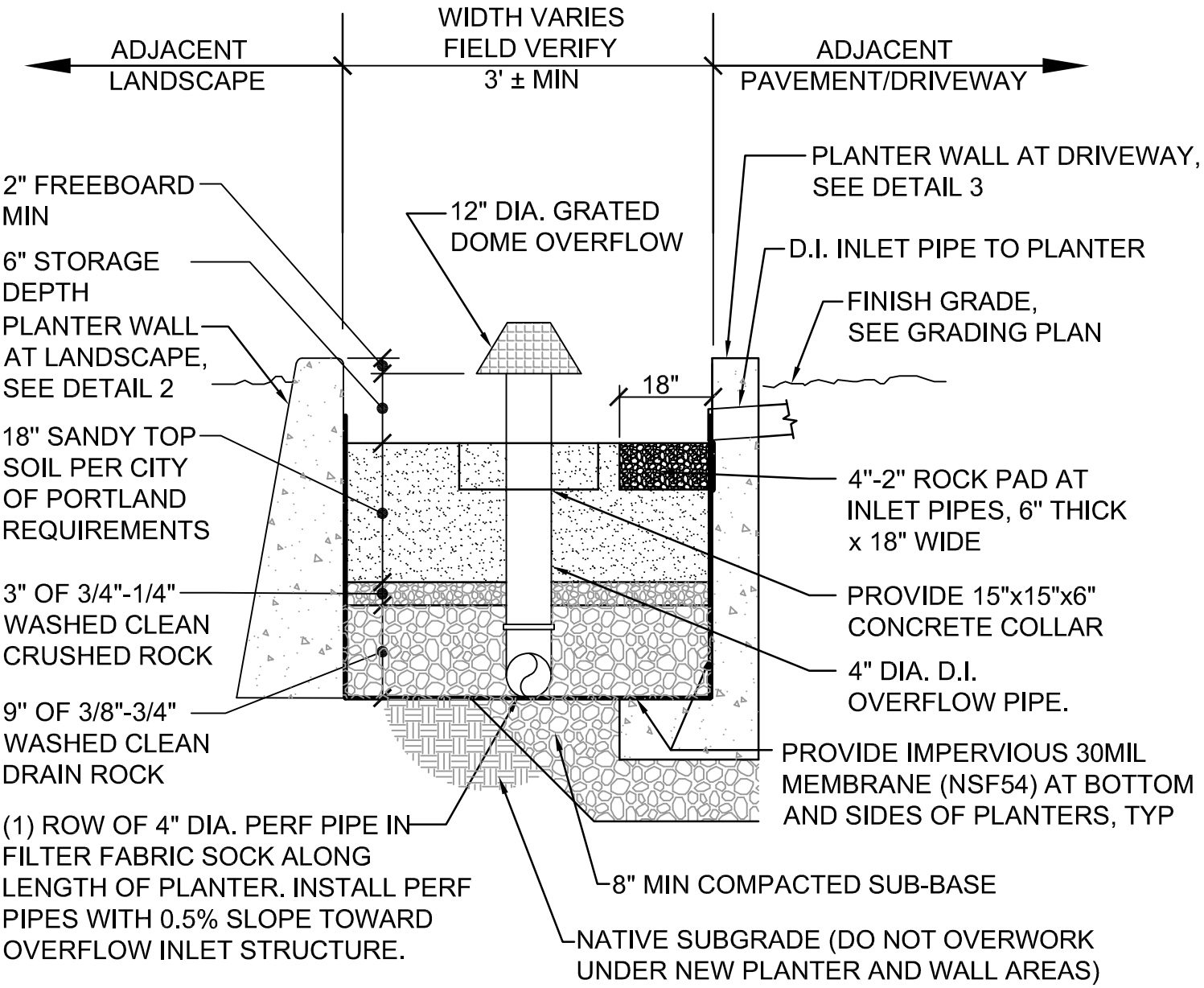

1 TYPICAL STORM WATER TREATMENT PLANTER

STM-1 N.T.S.

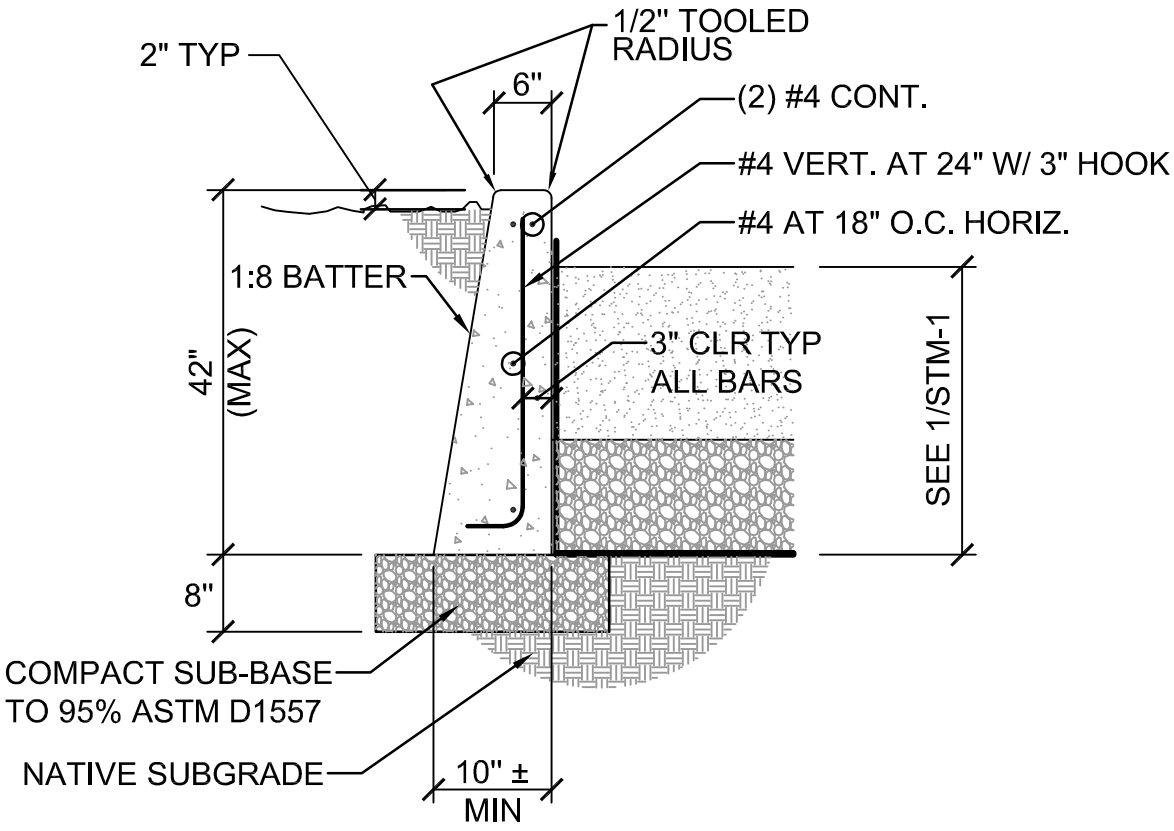

2 PLANTER WALL AT LANDSCAPE

STM-1

N.T.S.

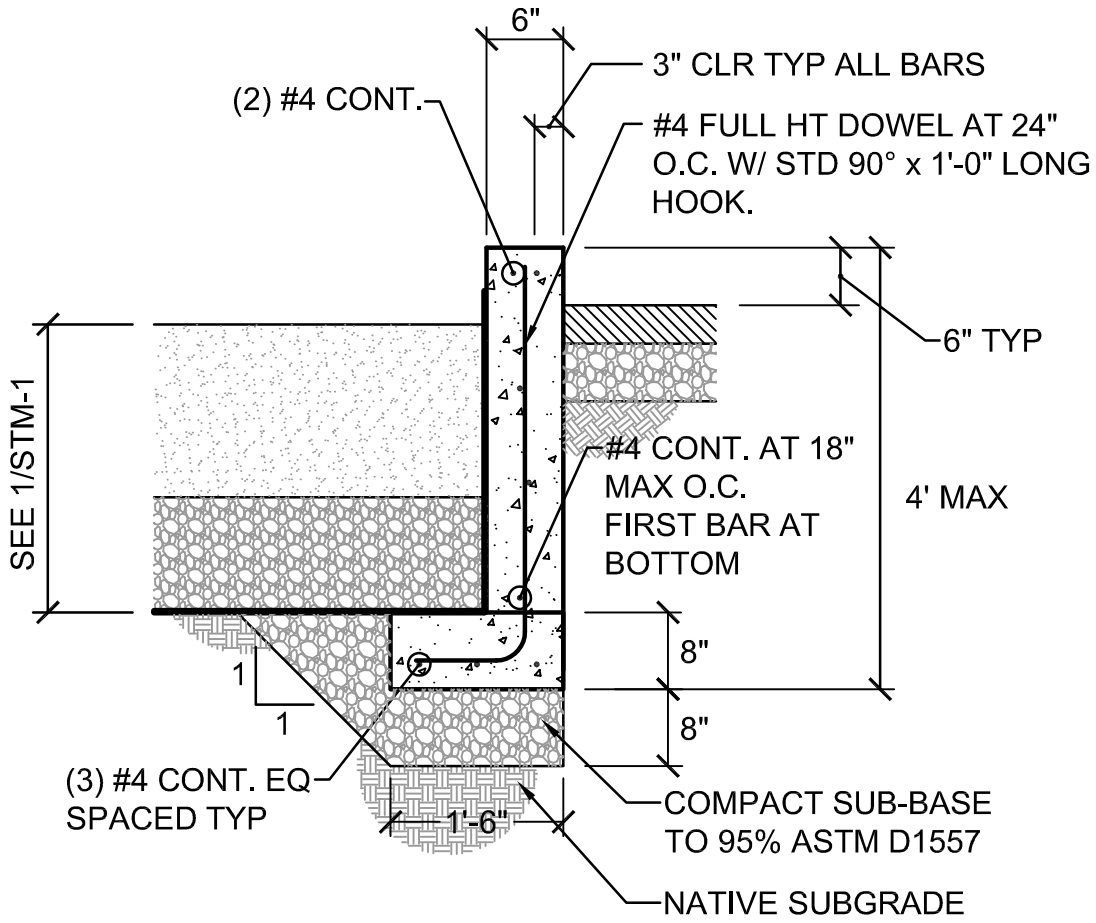

3 PLANTER WALL AT DRIVEWAY

STM-1

N.T.S.

Presumptive Approach Calculator ver. 1.2

Catchment Data

Catchment ID: 1

Project Name: West Linn 1
Project Address: Blankenship Road
Designer: kk
Company: WDY

Date: 02/25/19
Permit Number:

Run Time 2/25/2019 10:29:53 AM

Drainage Catchment Information

Catchment ID	1	
	Catchment Area	
Impervious Area	1,400	SF
Impervious Area	0.03	ac
Impervious Area Curve Number, CN_{imp}	98	
Time of Concentration, Tc, minutes	5	min.

Site Soils & Infiltration Testing Data

Infiltration Testing Procedure:	Open Pit Falling Head	
Native Soil Field Tested Infiltration Rate (I_{test}):	2	in/hr
Bottom of Facility Meets Required Separation From High Groundwater Per BES SWMM Section 1.4:	Yes	

Correction Factor Component

CF_{test} (ranges from 1 to 3)	2	

Design Infiltration Rates

I_{dsgn} for Native (I_{test} / CF_{test}):	1.00	in/hr
I_{dsgn} for Imported Growing Medium:	2.00	in/hr

Execute SBUH Calculations

SBUH Results

	Peak Rate (cfs)	Volume (cf)
PR	0.006	73
2-yr	0.02	253
5-yr	0.024	311
10-yr	0.028	369
25-yr	0.033	428

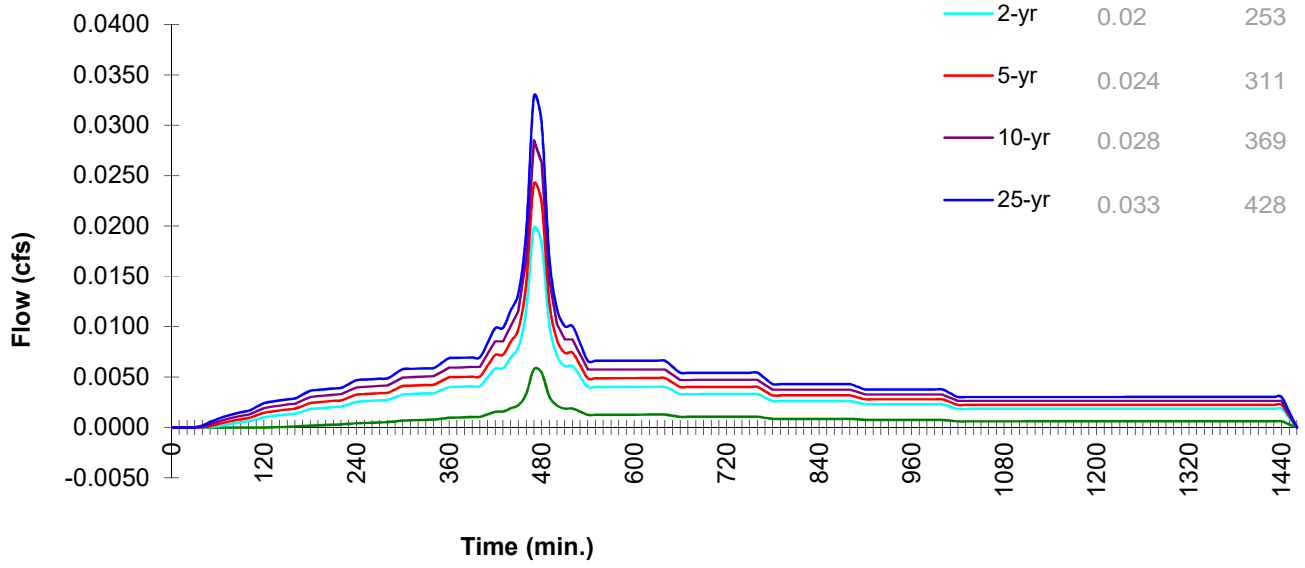

Presumptive Approach Calculator ver. 1.2

Catchment ID: 1

Run Time 2/26/2019 3:24:19 PM

Project Name: West Linn 1 **Catchment ID:** 1 **Date:** 2/25/2019

Instructions:

1. Identify which Stormwater Hierarchy Category the facility.
2. Select Facility Type.
3. Identify facility shape of surface facility to more accurately estimate surface volume, except for Swales and sloped planters that use the PAC Sloped Facility Worksheet to enter data.
4. Select type of facility configuration.
5. Complete data entry for all highlighted cells.

Catchment facility will meet Hierarchy Category: **3**

Goal Summary:

Hierarchy Category	SWMM Requirement	RESULTS box below needs to display…	
		Pollution Reduction as a	10-yr (aka disposal) as a
3	Off-site flow to drainageway, river, or storm-only pipe system.	PASS	N/A

Facility Type = Planter (Flat)

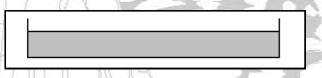

Facility Shape: Rectangle/Square **Facility Configuration:** D

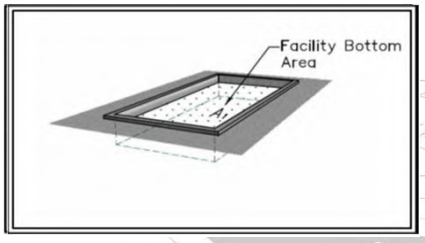

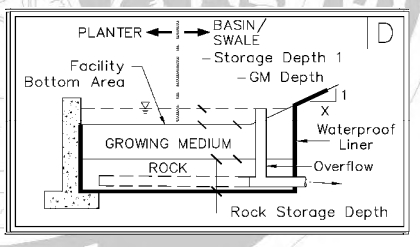

Calculation Guide
Max. Rock Stor. Bottom Area
25 SF

DATA FOR ABOVE GRADE STORAGE COMPONENT

Facility Bottom Area =	25	sf
Bottom Width =	5.0	ft
Facility Side Slope =	0	to 1
Storage Depth 1 =	6	in
Growing Medium Depth =	18	in
Freeboard Depth =	N/A	in

BELOW GRADE STORAGE

Rock Storage Capacity =		cf
Native Design Infiltration Rate =		in/hr
Infiltration Capacity =		cfs

Surface Capacity at Depth 1 =	13	cf
GM Design Infiltration Rate =	2.00	in/hr
Infiltration Capacity =	0.001	cfs

RESULTS

		Overflow Volume			
Pollution Reduction	PASS	0 CF	95%	Surf. Cap. Used	Run PAC

Output File

	2-yr	5-yr	10-yr	25-yr
Peak cfs	0.020	0.024	0.028	0.033

FACILITY FACTS

Total Facility Area Including Freeboard =	25 SF
Sizing Ratio (Total Facility Area / Catchment Area) =	0.018

BES - Presumptive Approach Calculator - Ver 1.2

PR Con-D

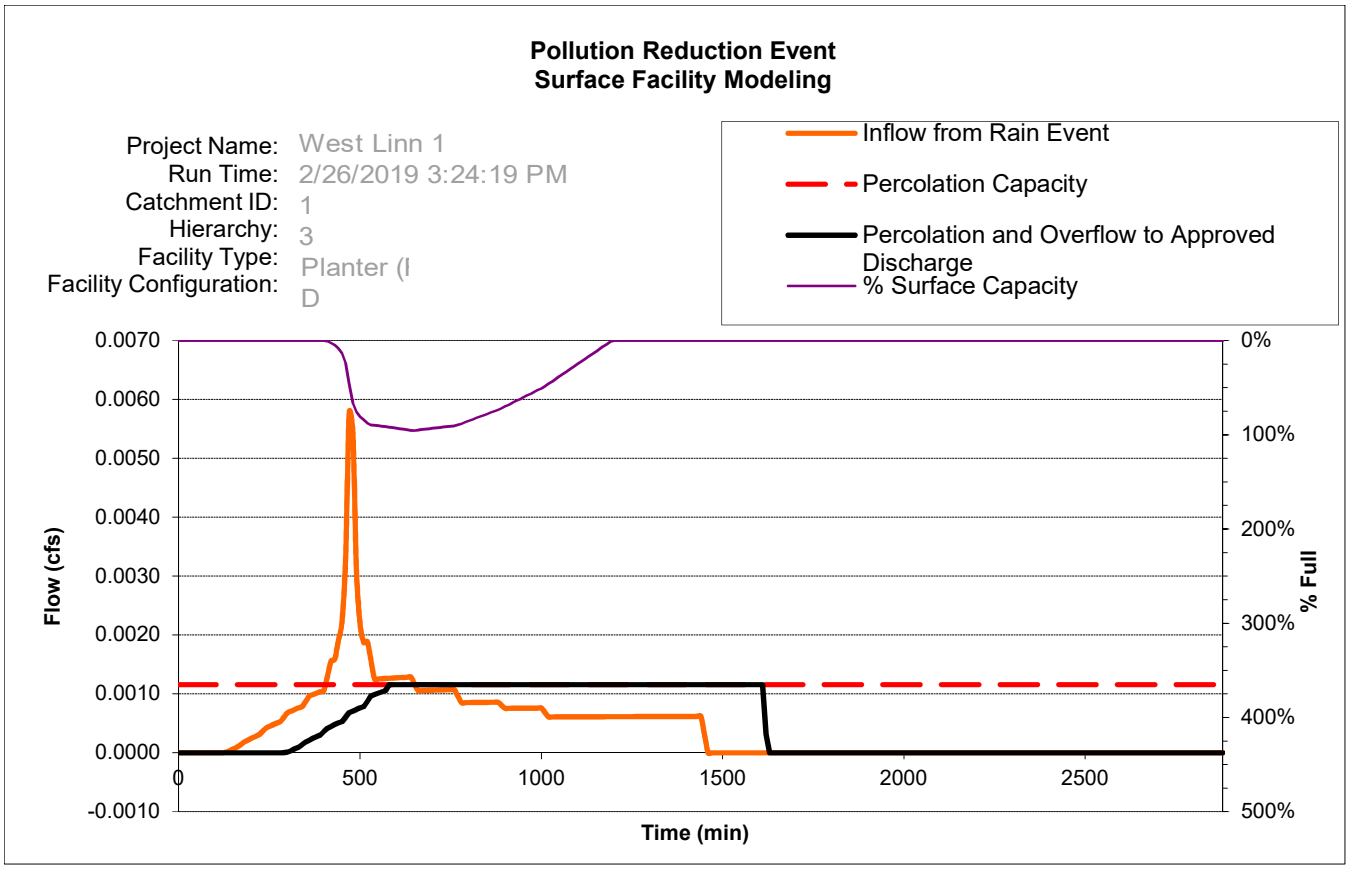

Output Chart

BES - Presumptive Approach Calculator - Ver 1.2

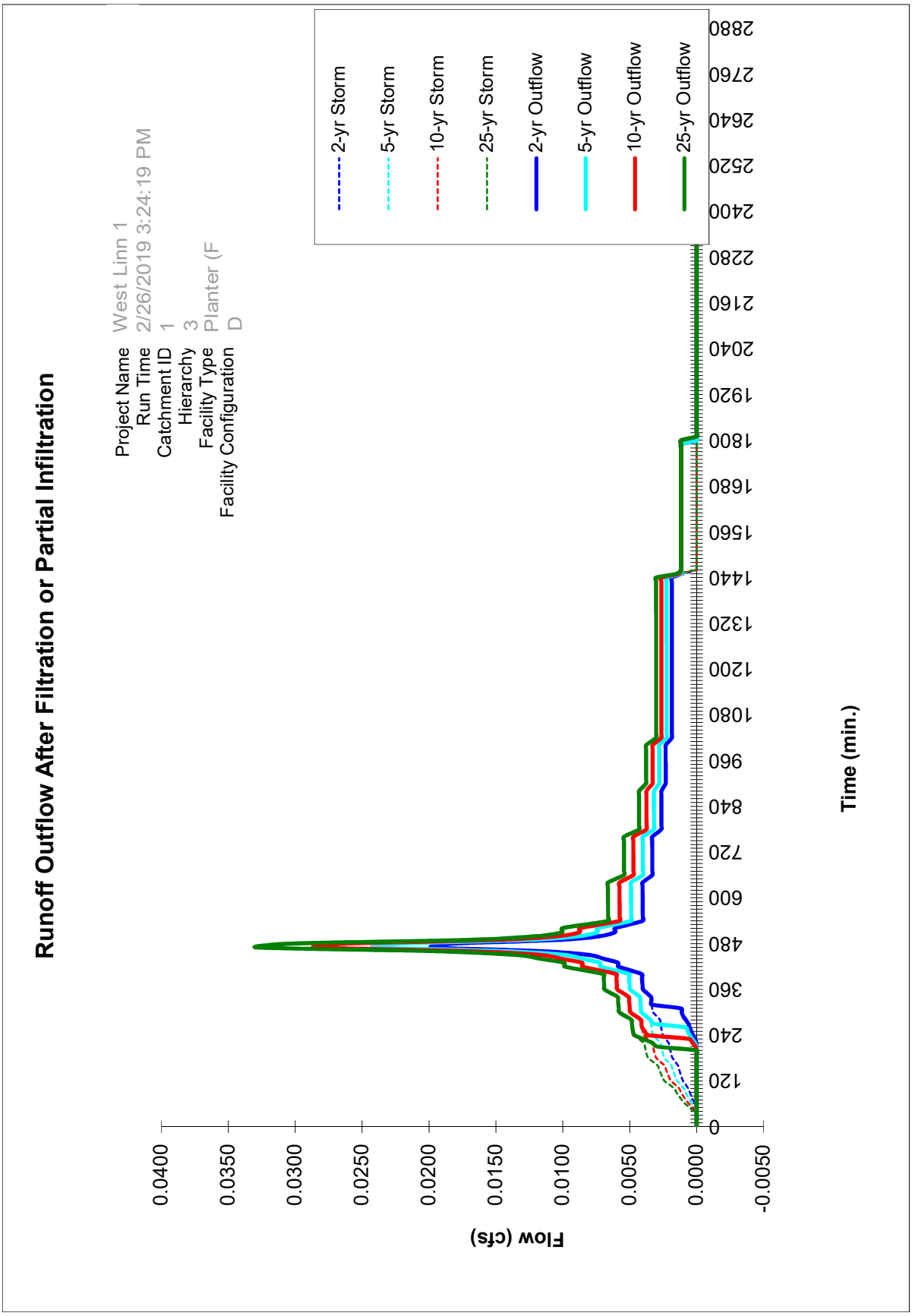

CONVEYANCE CALCULATIONS

- Using 3.90” for the 25 year, 24 hour storm, the peak flow is 0.03 cfs.
- Pipe Capacity Equation
  - $Q_{max} = \frac{1.486 \times A \times R^{2/3} \times S^{1/2}}{n}$
  - A = Area; R = Hydraulic Radius; S = Slope; n = Manning’s Roughness Coefficient
- 4” dia. storm from roof to planter at 0.9% slope
  where n = 0.013, A = 0.087 sf, R = 0.083 ft, S = 0.005
  Q_{max} = 0.174 cfs > Q_{25} = 0.03 cfs OK

chamber sizing- 19005 *Type IA 24-hr 25 yr Rainfall=3.90"*
Prepared by {enter your company name here} Printed 3/5/2019
HydroCAD® 10.00 s/n 07105 © 2011 HydroCAD Software Solutions LLC

Summary for Subcatchment 3E: Roof Area - Parcel 1

Runoff = 0.03 cfs @ 7.88 hrs, Volume= 0.010 af, Depth= 3.67"

Runoff by SBUH method, Split Pervious/Imperv., Time Span= 0.00-26.00 hrs, dt= 0.01 hrs
Type IA 24-hr 25 yr Rainfall=3.90"

	Area (sf)	CN	Description
*	1,400	98	Impervious
	1,400	98	100.00% Impervious Area

Tc (min)	Length (feet)	Slope (ft/ft)	Velocity (ft/sec)	Capacity (cfs)	Description
5.0					**Direct Entry, Post Developed**

WDY Structural • Civil Engineers

STORM DRAIN CALCULATIONS

FOR

PRIVATE STORMWATER SYSTEM

AT

1791 Blankenship Road
West Linn, OR 97068
Parcel 3

March 11, 2019

TABLE OF CONTENTS/INCLUSIONS:

Storm Drain Narrative:.....STM-1 to STM-2
Project Area Map:.....STM-3
Planter Details:.....STM-4 to STM-6
PAC Print Outs:.....STM-7 to STM-10
Storm Pipe Conveyance Calculations:..... STM-11 to STM-12

6443 SW Beaverton-Hillsdale Hwy, suite 210 • Portland, OR 97221 • ph: 503.203.8111 • fx: 503.203.8122 • www.wdyi.com

WDY **Structural • Civil Engineers** **Civil Memo**

March 11, 2019

To: Jeremy Barnett
15112 Quarry Road
Lake Oswego OR

RE: **Residential Roof Storm Treatment Only System**
1791 Blankenship Road, Parcel 3
West Linn, Oregon 97068

WDY, Inc. has been asked to provide Civil analysis and details for the construction of a new "Roof Water Only" storm mitigation system for the roof storm runoff for a new single family residence at Parcel 3 at 1791 Blankenship Road.

The site is currently a single family house with no known existing storm treatment or detention facilities. The existing site will be partitioned into three lots: Parcel 1, Parcel 2 and Parcel 3, with each parcel containing similarly sized homes. The site is relatively flat at the northeast, and becomes steeper towards the southwest. There is an existing storm only main in 13th Street and it is assumed that it is available and has enough depth to connect into.

Per the Geotechnical infiltration report, the infiltration rate of the site is 2 inches/hour. This number is typically the minimum needed for infiltration. However, due to the layout of the site, required setbacks and required easements, a total onsite infiltration facility is not practical at this site.

WDY has contacted and discussed with the City of West Linn about the project site conditions, and it is our understanding that the proposed residence requires a stormwater quality treatment, and if the site will create less than 5,000 square feet of new impervious area, storm water detention is not required. The City of West Linn follows the City of Portland Stormwater Management Manual to size and design the storm facilities.

The proposed storm mitigation is to provide a flow-thru vegetated storm treatment only planter for the roof water runoff, with overflow to the existing storm only main in 13th Street. The onsite planter was sized using the City of Portland's Presumptive Approach Calculator (PAC). To adjust for the difference in rainfall intensities from Portland to West Linn, the treatment facility must add 25% of the PAC calculated area. The storm planter must be lined at the bottom and sides with a 30 mil impervious liner to conform with minimum setback requirements from property lines and buildings.

Onsite residential roof only impervious area = approximately 1,400 square feet.
Per the PAC, the minimum planter bottom area = 25 SF, with a storage depth of 6 inches.
Adjusting to West Linn, minimum planter bottom area = 25 SF x 1.25 = 32 SF minimum

Storm pipes to the planter shall be at minimum 4" diameter ductile iron pipe at 0.9% slope. Storm pipes exiting the planter shall be at minimum 4" dia. PVC ASTM D-3034, SDR-35 pipe at 0.9% min slope. The storm water collected from the foundation drain may connect to the 4" diameter pipe leaving the storm planter.

Included in this packet are details for the planter and planter walls at landscape and driveway sections. Also included are conveyance calculations for the 4" diameter pipe entering and leaving the planter.

Planter locations may vary to fit the site, as long as the planter bottom area is at minimum 32 square feet and the minimum requirements of the details provided are followed.

These calculations and details are for treatment design of roof water only. Exact location and depth of existing public storm pipe to be field verified.

LIMITATIONS

This letter is not intended to identify all conditions that may affect proposed conditions or proposed additions at this site. This analysis is based on information provided by the owner and review of digital map documentation and discussions with the owner. WDY work is for design and detail only. All Geotechnical information is to be provided by others. WDY, Inc. provides no warranty or guarantee either expressed or implied. This analysis and detail is an instrument of service and shall not be copied or distributed to others without the authorization of WDY, Inc.

Sincerely,

Kari Kuboyama, P.E.
WDY INC.

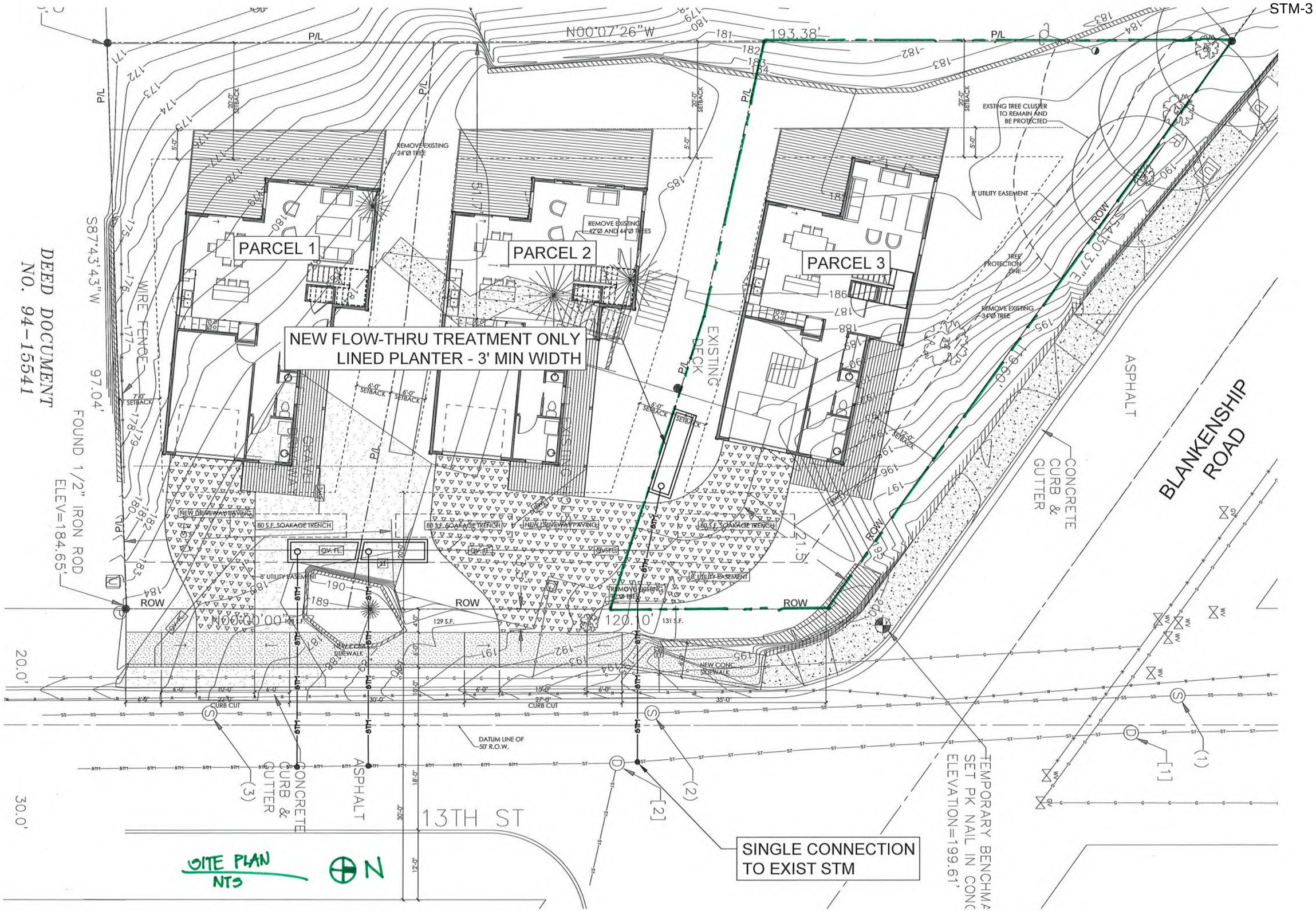
PARCEL 1
PARCEL 2
PARCEL 3
NEW FLOW-THRU TREATMENT ONLY
LINED PLANTER - 3' MIN WIDTH
SINGLE CONNECTION
TO EXIST STM
BLANKENSHIP
ROAD
13TH ST
ASPHALT
CONCRETE
CURB &
GUTTER
EXISTING
DECK
N00°07'26"W
193.38'
S87°43'43"W
97.04'
N00°00'00"
120.10'
S54°30'37"E
119.60'
DEED DOCUMENT
NO. 94-15541
FOUND 1/2" IRON ROD
ELEV=184.65'
TEMPORARY BENCHMA
SET PK NAIL IN CONC
ELEVATION=199.61'
DATUM LINE OF
50' R.O.W.
REMOVE EXISTING
24"Ø TREE
REMOVE EXISTING
42"Ø AND 44"Ø TREES
EXSTING TREE CLUSTER
TO REMAIN AND
BE PROTECTED
8' UTILITY EASEMENT
TREE
PROTECTION
LINE
REMOVE EXISTING
34"Ø TREE
NEW DRIVEWAY PAVING
80 S.F. SOAKAGE TRENCH
NEW CONC
SIDEWALK
CURB CUT
WIRE FENCE
ROW
P/L
20.0'
30.0'
SITE PLAN
NTS
N

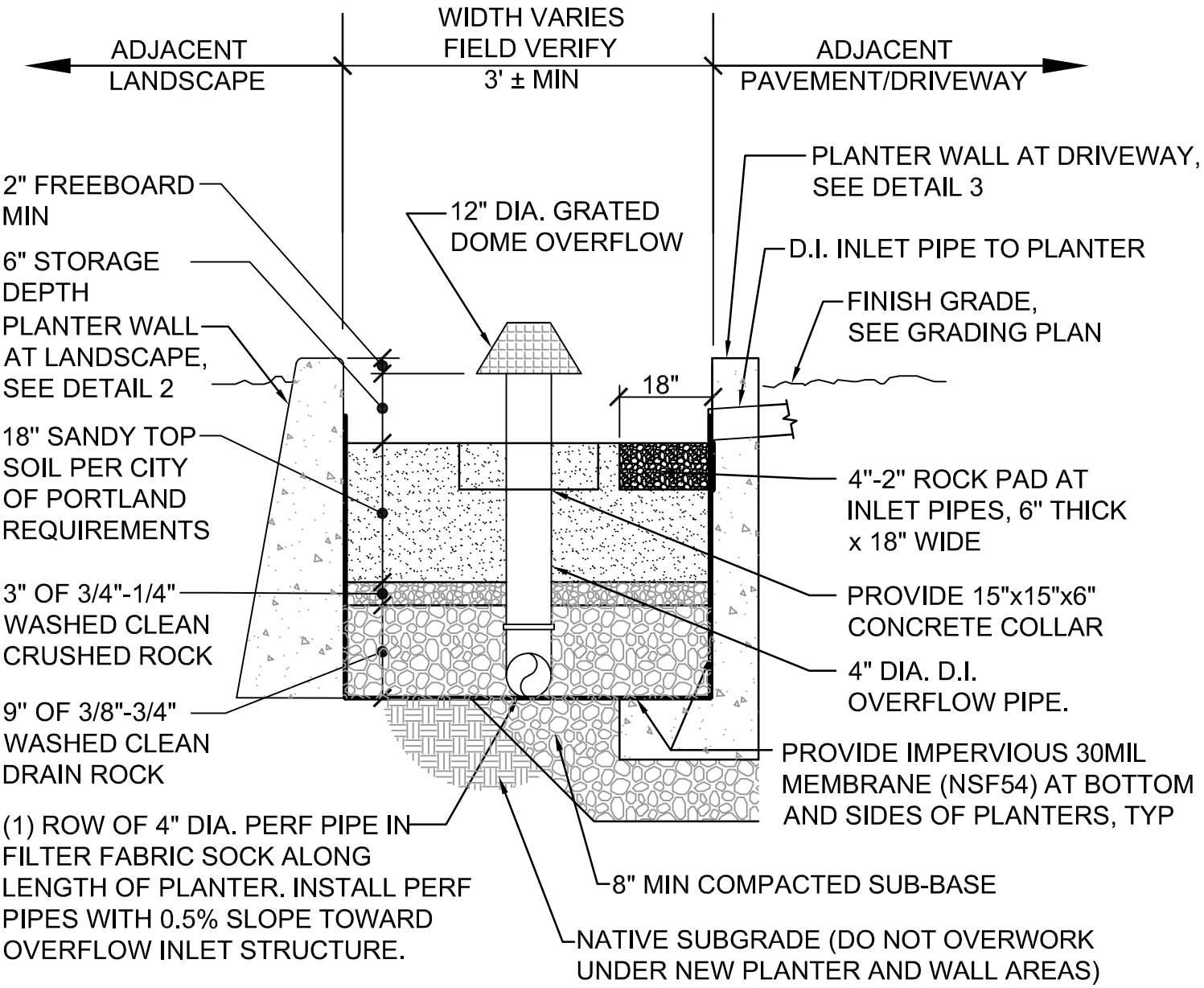

1 TYPICAL STORM WATER TREATMENT PLANTER

STM-1 N.T.S.

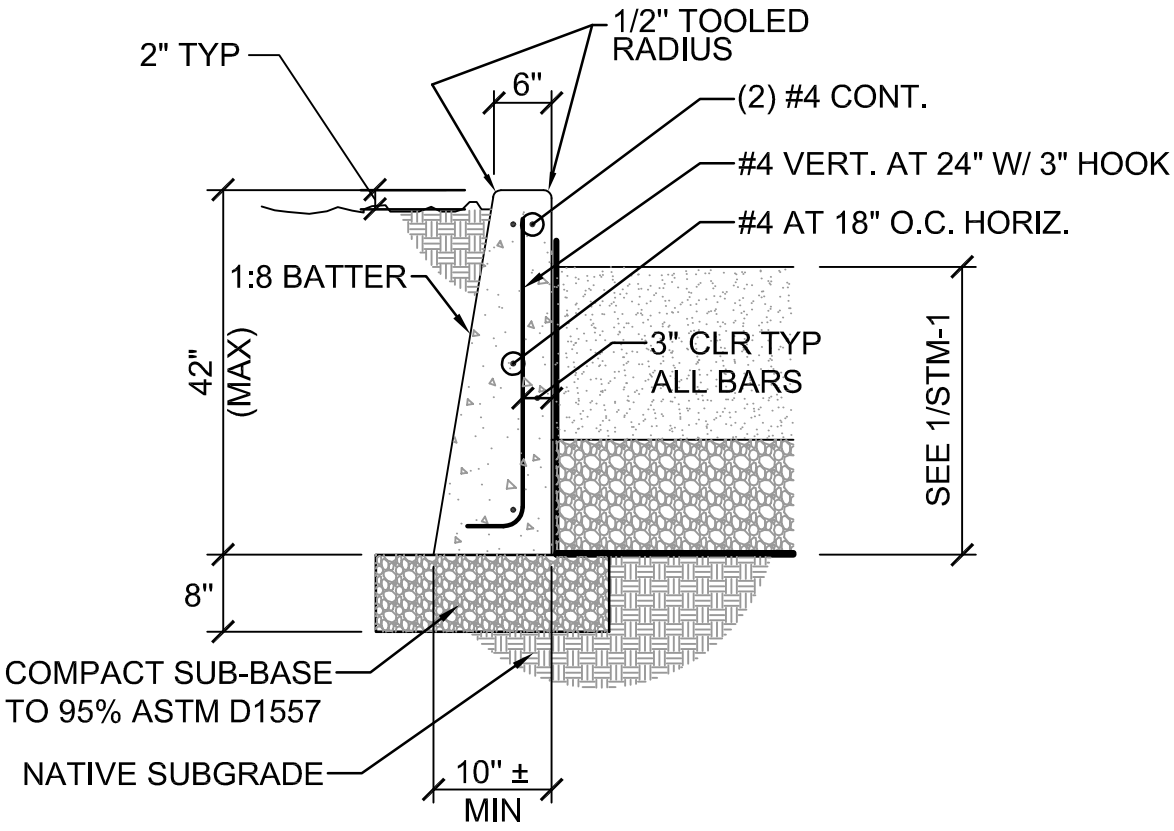

2 PLANTER WALL AT LANDSCAPE

STM-1

N.T.S.

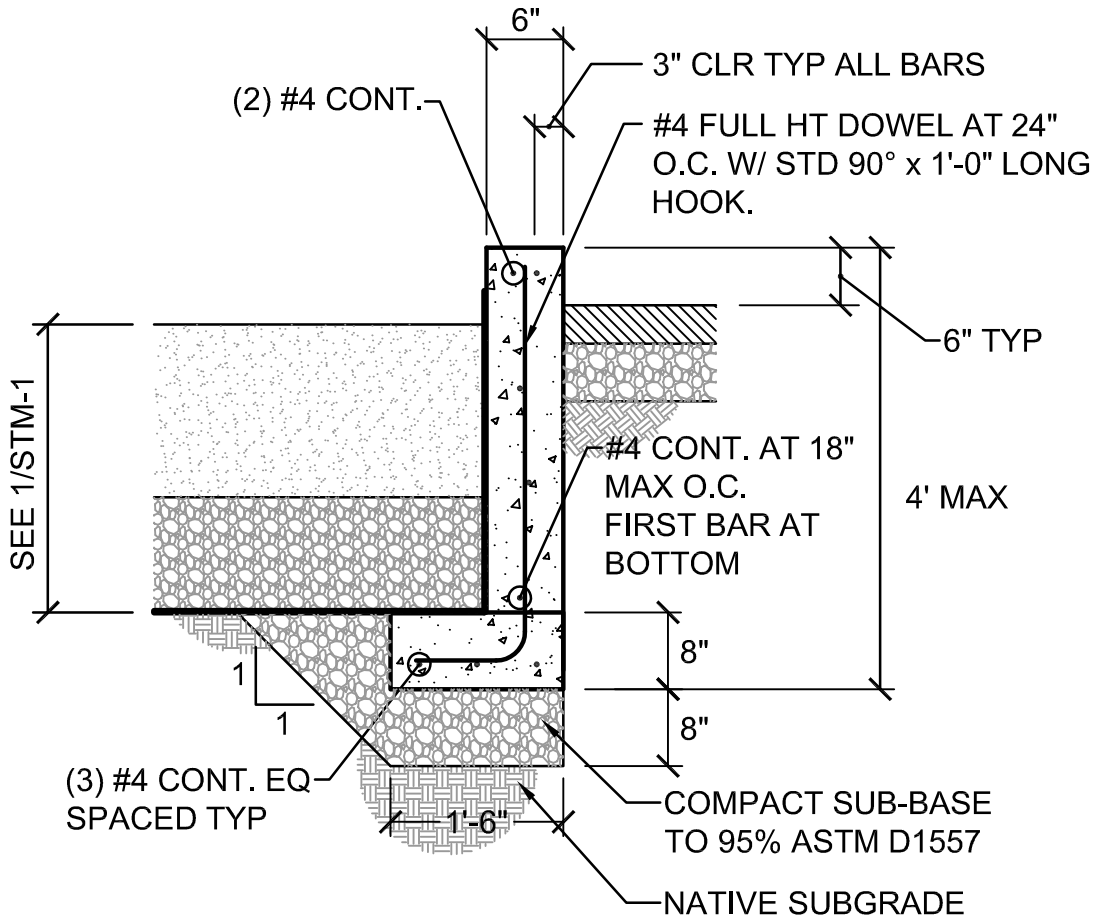

3 PLANTER WALL AT DRIVEWAY

STM-1

N.T.S.

Presumptive Approach Calculator ver. 1.2

Catchment Data

Catchment ID: 1

Project Name: West Linn 1
Project Address: Blankenship Road
Date: 02/25/19
Permit Number:

Run Time 2/25/2019 10:29:53 AM

Designer: kk
Company: WDY

Drainage Catchment Information

Catchment ID	1	
	Catchment Area	
Impervious Area	1,400	SF
Impervious Area	0.03	ac
Impervious Area Curve Number, CN_{imp}	98	
Time of Concentration, Tc, minutes	5	min.

Site Soils & Infiltration Testing Data

Infiltration Testing Procedure:	Open Pit Falling Head	
Native Soil Field Tested Infiltration Rate (I_{test}):	2	in/hr
Bottom of Facility Meets Required Separation From High Groundwater Per BES SWMM Section 1.4:	Yes	

Correction Factor Component

CF_{test} (ranges from 1 to 3)	2	

Design Infiltration Rates

I_{dsgn} for Native (I_{test} / CF_{test}):	1.00	in/hr
I_{dsgn} for Imported Growing Medium:	2.00	in/hr

Execute SBUH Calculations

SBUH Results

	Peak Rate (cfs)	Volume (cf)
PR	0.006	73
2-yr	0.02	253
5-yr	0.024	311
10-yr	0.028	369
25-yr	0.033	428

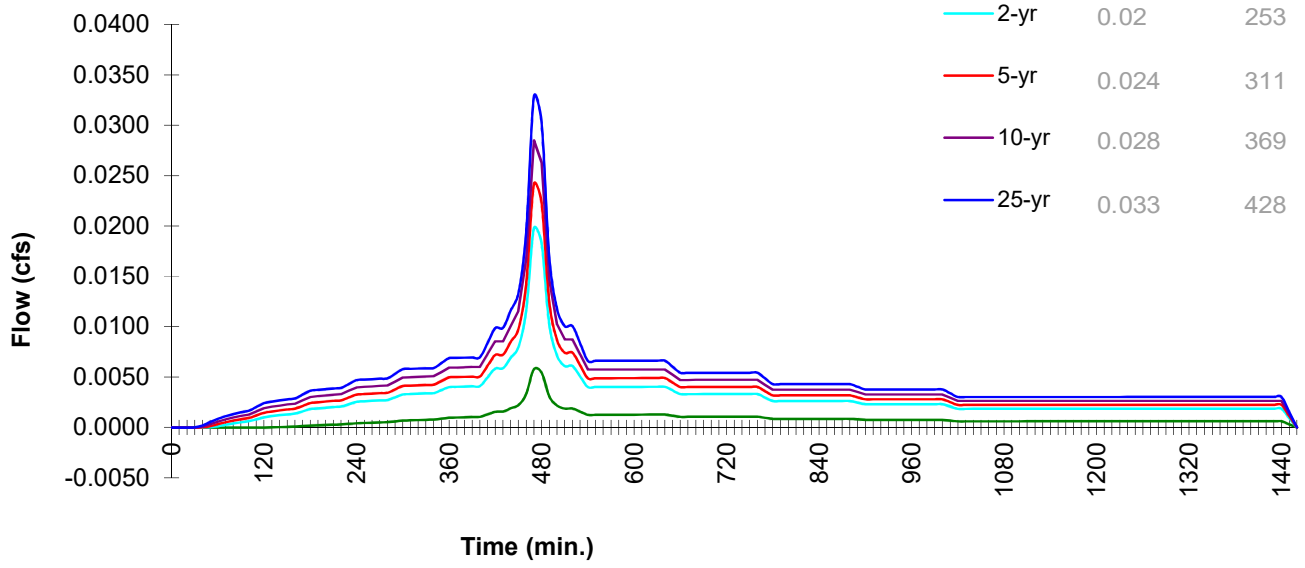

Printed: 2/26/2019 3:23 PM

Presumptive Approach Calculator ver. 1.2

Catchment ID: 1

Run Time 2/26/2019 3:24:19 PM

Project Name: West Linn 1 **Catchment ID:** 1 **Date:** 2/25/2019

Instructions:

1. Identify which Stormwater Hierarchy Category the facility.
2. Select Facility Type.
3. Identify facility shape of surface facility to more accurately estimate surface volume, except for Swales and sloped planters that use the PAC Sloped Facility Worksheet to enter data.
4. Select type of facility configuration.
5. Complete data entry for all highlighted cells.

Catchment facility will meet Hierarchy Category: **3**

Goal Summary:

Hierarchy Category	SWMM Requirement	RESULTS box below needs to display…	
		Pollution Reduction as a	10-yr (aka disposal) as a
3	Off-site flow to drainageway, river, or storm-only pipe system.	PASS	N/A

Facility Type = Planter (Flat)

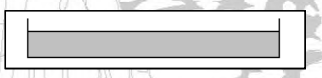

Facility Shape: Rectangle/Square **Facility Configuration:** D

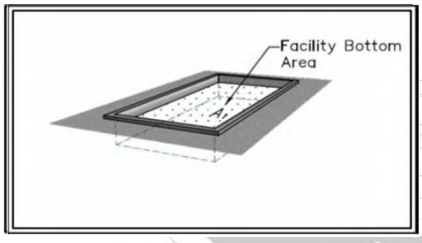

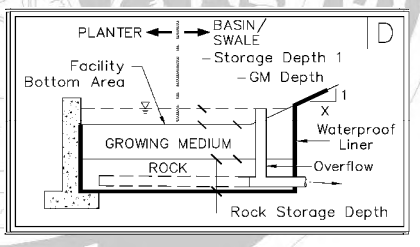

Calculation Guide
Max. Rock Stor. Bottom Area
25 SF

DATA FOR ABOVE GRADE STORAGE COMPONENT

Facility Bottom Area =	25	sf
Bottom Width =	5.0	ft
Facility Side Slope =	0	to 1
Storage Depth 1 =	6	in
Growing Medium Depth =	18	in
Freeboard Depth =	N/A	in
Surface Capacity at Depth 1 =	13	cf
GM Design Infiltration Rate =	2.00	in/hr
Infiltration Capacity =	0.001	cfs

BELOW GRADE STORAGE

Rock Storage Capacity =		cf
Native Design Infiltration Rate =		in/hr
Infiltration Capacity =		cfs

RESULTS

		Overflow Volume		
Pollution Reduction	PASS	0 CF	95%	Surf. Cap. Used

Run PAC

Output File

	2-yr	5-yr	10-yr	25-yr
Peak cfs	0.020	0.024	0.028	0.033

FACILITY FACTS

Total Facility Area Including Freeboard =	25 SF
Sizing Ratio (Total Facility Area / Catchment Area) =	0.018

BES - Presumptive Approach Calculator - Ver 1.2

PR Con-D

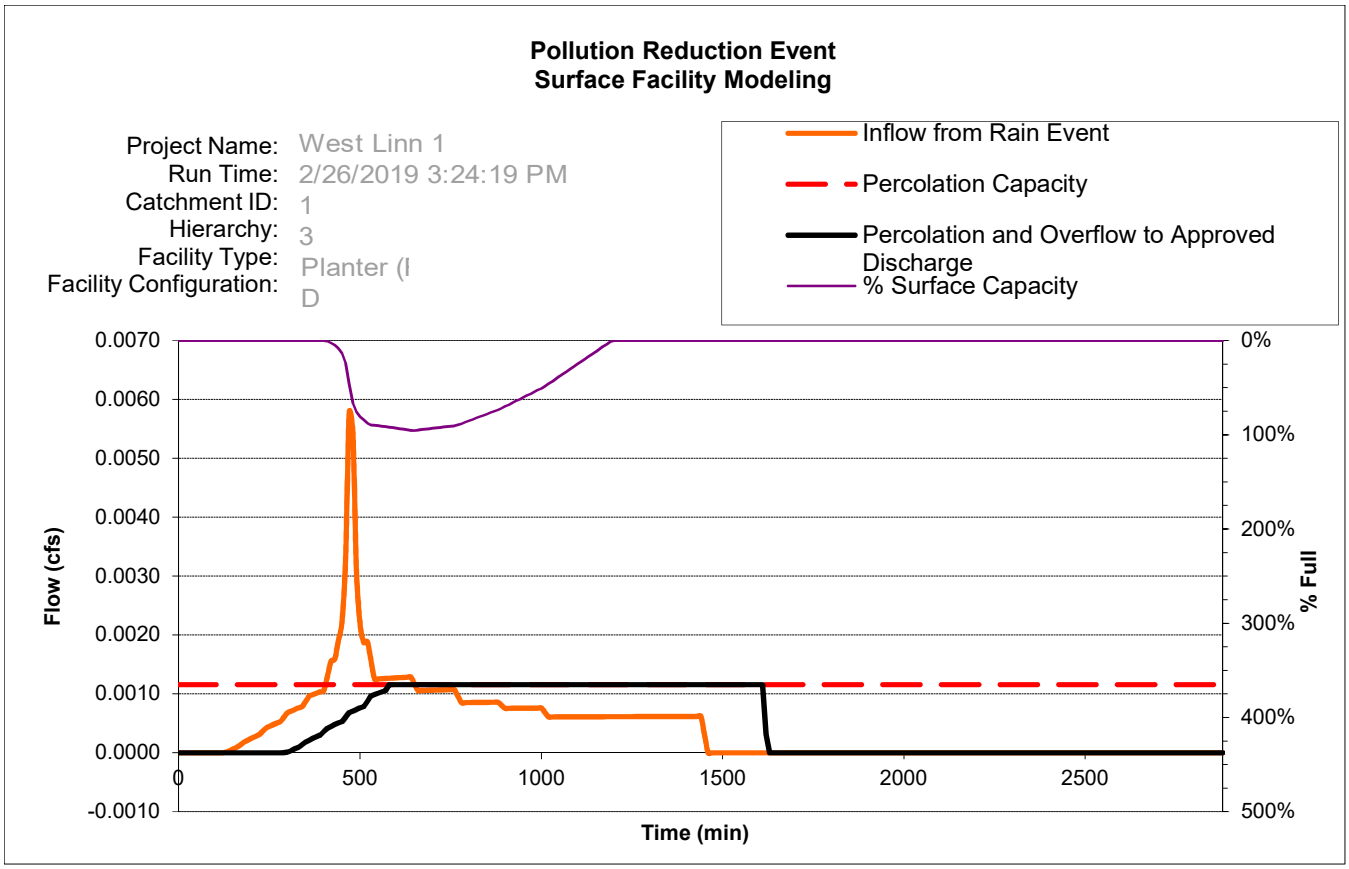

Output Chart

BES - Presumptive Approach Calculator - Ver 1.2

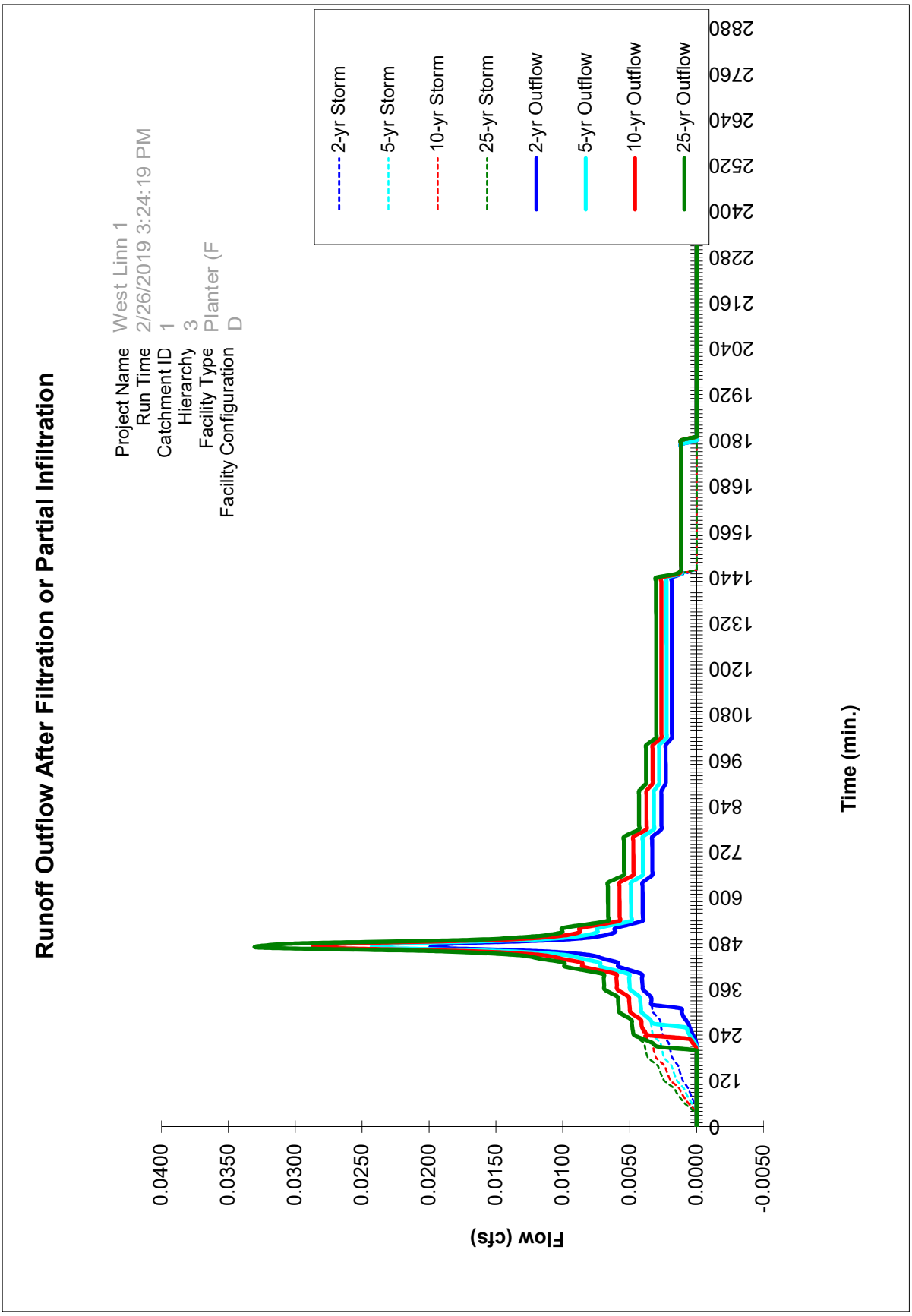

CONVEYANCE CALCULATIONS

- Using 3.90” for the 25 year, 24 hour storm, the peak flow is 0.03 cfs.
- Pipe Capacity Equation
  - $Q_{max} = \frac{1.486 \times A \times R^{2/3} \times S^{1/2}}{n}$
  - A = Area; R = Hydraulic Radius; S = Slope; n = Manning’s Roughness Coefficient
- 4” dia. storm from roof to planter at 0.9% slope
  where n = 0.013, A = 0.087 sf, R = 0.083 ft, S = 0.005
  Q_{max} = 0.174 cfs > Q_{25} = 0.03 cfs OK

Summary for Subcatchment 3E: Roof Area - Parcel 1

Runoff = 0.03 cfs @ 7.88 hrs, Volume= 0.010 af, Depth= 3.67"

Runoff by SBUH method, Split Pervious/Imperv., Time Span= 0.00-26.00 hrs, dt= 0.01 hrs
Type IA 24-hr 25 yr Rainfall=3.90"

	Area (sf)	CN	Description
*	1,400	98	Impervious
	1,400	98	100.00% Impervious Area

Tc (min)	Length (feet)	Slope (ft/ft)	Velocity (ft/sec)	Capacity (cfs)	Description
5.0					**Direct Entry, Post Developed**

SINGLE FAMILY RESIDENCE - PARCEL 1

1791 BLANKENSHIP ROAD, WEST LINN, OREGON 97068

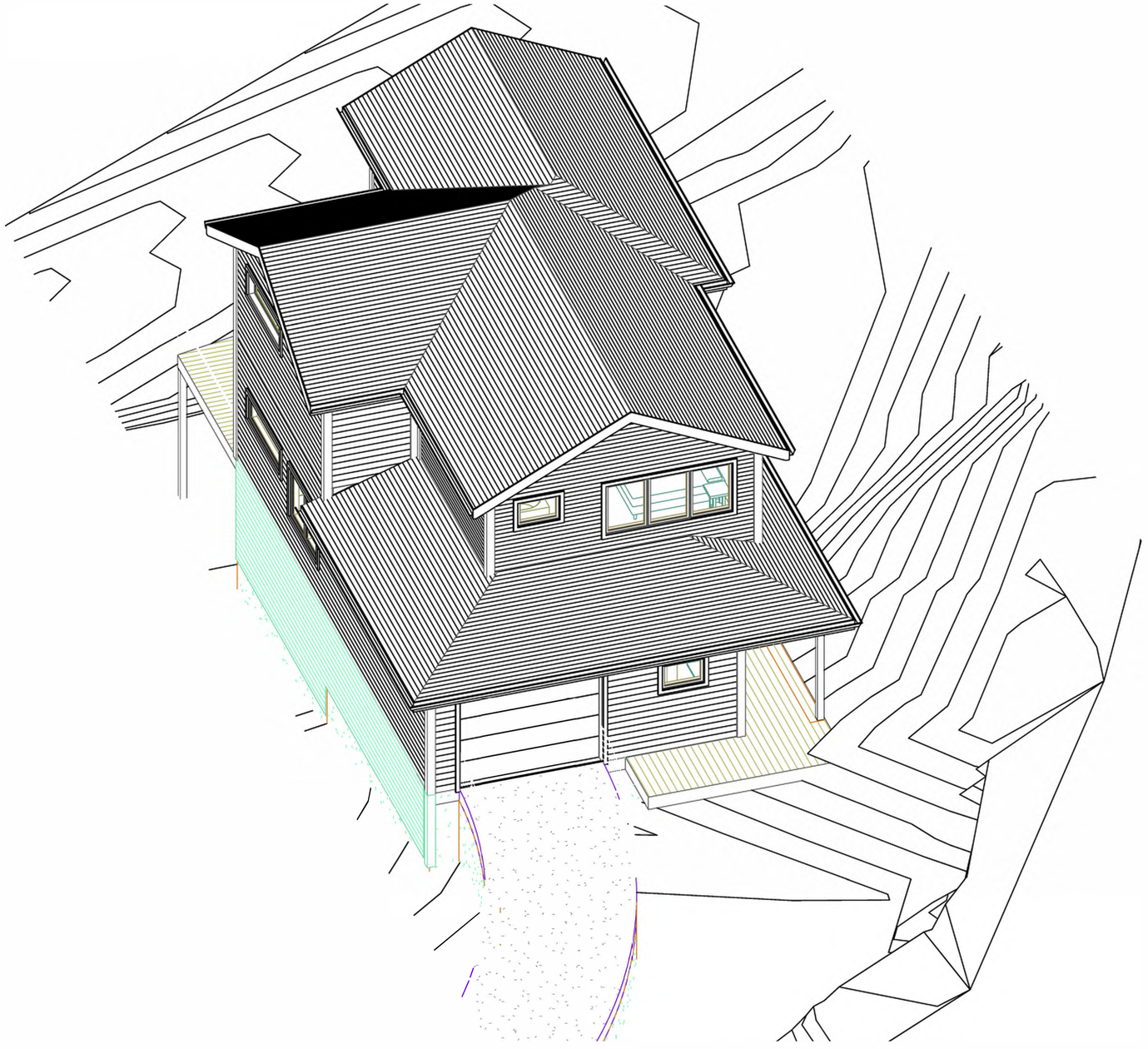

PROJECT TEAM

OWNER: JEREMY BARNETT
10220 SW VIEW TERRACE
TIGARD, OR 97224
PHONE: 503-705-8487
EMAIL: localbarnett@gmail.com

ARCHITECT: INTEGRATE ARCHITECTURE
& PLANNING, P.C.
1715 N. TERRY ST.
PORTLAND, OR 97217
CONTACT: PHIL SYDNOR
PHONE: 716-238-3263
EMAIL: PHIL@INTEGRATEARCH.COM

STRUCTURAL: DAVE HORN
HORN CONSULTING ENGINEERS LLC
9320 SW Barbur Blvd, Ste. 135
Portland, OR 97219
T: 503-892-5782 |C: 503-807-9059|
dave@hornce.com|www.hornce.com

CONTRACTOR:

PROJECT DESCRIPTION

NEW SINGLE-FAMILY DETACHED RESIDENCE.

SITE WAS FORMERLY A SINGLE PARCEL WHICH WAS RECENTLY SUB-DIVIDED INTO THREE (3) INDIVIDUAL PARCELS.
SEE A0.2 FOR PLOT PARTION MAP.

THIS SUBMISSION IS FOR DEVELOPMENT OF PARCEL 1.

SHEET INDEX

A0.0 COVER
A0.1 SURVEY
A0.2 PLOT PARTITION MAP
A1.1 SITE PLAN
A1.1a RIGHT-OF-WAY DETAILS
A1.2 UTILITY PLAN
A1.3 FOUNDATION PLAN
A1.4 SITE ELEVATIONS
A2.0 BUILDING PLANS
A3.0 BUILDING ELEVATIONS
A4.0 BUILDING SECTIONS
A5.0 SCHEDULES
A6.0 REFLECTED CEILING PLANS
A7.0 INTERIOR ELEVATIONS
S0 SHEARWALL AND HOLDDOWN SCHEDULES / STRUCT. NOTES / MAIN FLOOR FRAMING PLAN
S1.1 FOUNDATION / MAIN FLOOR FRAMING PLANS
S1.2 1ST & 2ND FLOOR SHEARWALL / FRAMING PLANS
S2.1 DETAILS
S2.2 DETAILS
S3.1 DETAILS
S3.2 DETAILS
S4.1 DETAILS

PROPERTY INFO.

TAX LOT NO: 21E35CB02600
SITE AREA: 15,315 SF
NEIGHBORHOOD: WILLAMETTE
COMP. PLAN: MU - MIXED USE
ZONING: MU - MIXED USE TRANSITION

APPLICABLE CODES:

CDC CHAPTER 105: AMENDMENTS TO THE MAP AND CODE
CDC CHAPTER 16: R-2.1 ZONING
CDC CHAPTER 48: ACCESS, EGRESS, AND CIRCULATION
CDC CHAPTER 85: LAND DIVISION
CDC CHAPTER 92: REQUIRED IMPROVEMENTS

SITE MAP

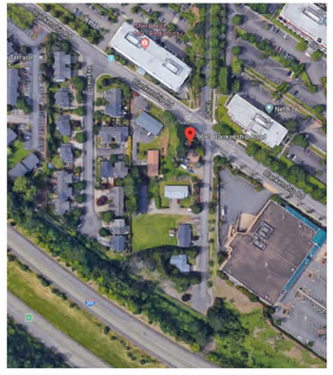

FOR PERMIT 09/28/2018

MARK	DATE	DESCRIPTION

REGISTERED ARCHITECT
PHILIP H. SYDNOR
PORTLAND, OREGON
5822
STATE OF OREGON

COVER

PERMIT SET
09/28/2018
SINGLE FAMILY RESIDENCES
1791 BLANKENSHIP ROAD
WEST LINN, OREGON 97068

A0.0

INTEGRATE ARCHITECTURE & PLANNING
www.integratearch.com
© Integrate Architecture & Planning, p.c.

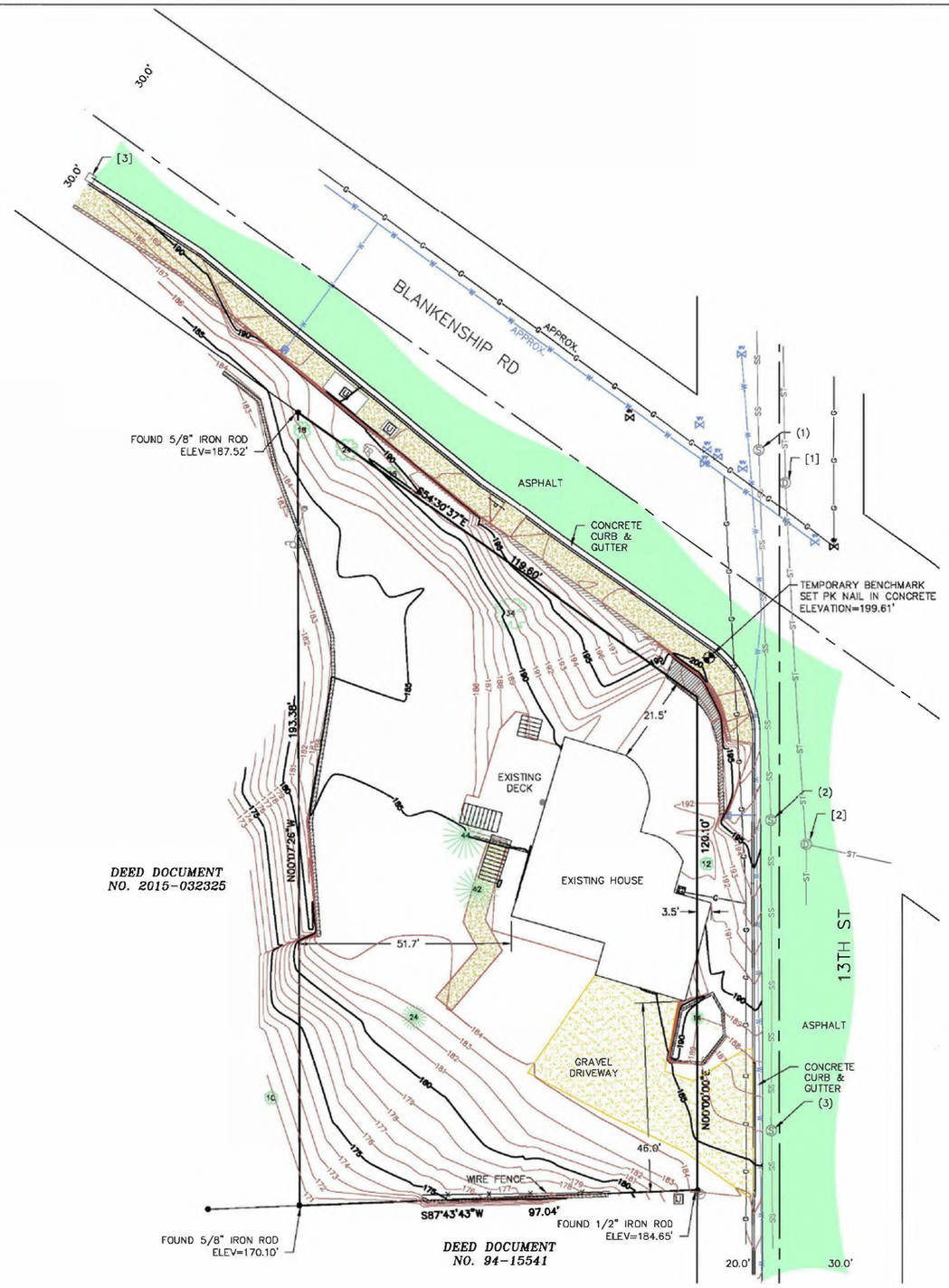

LEGEND

- EXISTING DECIDUCUS TREE W/ TRUNK DIAMETER (INCHES)(CL=CLUSTER)
- EXISTING CONIFEROUS TREE W/ TRUNK DIAMETER (INCHES)(CL=CLUSTER)
- EXISTING SIGN
- TR EXISTING TELEPHONE RISER
- EXISTING POWER POLE
- EXISTING GUY ANCHOR
- EXISTING ELECTRIC RISER
- EXISTING WATER METER
- EXISTING WATER VALVE
- EXISTING UNDERGROUND WATER
- EXISTING GAS VALVE
- EXISTING GAS METER
- EXISTING UNDERGROUND GAS LINE
- EXISTING CATCH BASIN
- EXISTING SANITARY MANHOLE
- EXISTING STORM MANHOLE
- EXISTING CLEANOUT
- SS EXISTING SANITARY SEWER LINE
- ST EXISTING STORM SEWER LINE
- U EXISTING UTILITY VAULT
- EXISTING FENCE
- EXISTING WALL
- FOUND MONUMENTS
- LOCAL BENCHMARK ESTABLISHED
- EXISTING GRAVEL
- EXISTING CONCRETE
- EXISTING ASPHALT

N

SCALE 1" = 20'

[1] SDMH
RIM=199.1
24" IE IN N=192.5
IE OUT UNDER WATER

[2] SDMH
RIM=196.7
10" IE IN N=184.7
14" IE IN E=184.5
14" IE OUT S=184.4

[3] SDCB
GRATE=188.3
10" IE OUT N=183.8

(1) SSMH
RIM=198.9
8" IE IN N=190.2
8" IE OUT S=190.0

(2) SSMH
RIM=196.4
8" IE IN N=188.0
8" IE OUT S=187.8

(3) SSMH
RIM=186.1
8" IE IN N=175.4
8" IE OUT S=175.2

REGISTERED
PROFESSIONAL
LAND SURVEYOR

OREGON
JULY 11, 2017
DONALD SCOTT SORENSON
60310

RENEWAL DATE: JUNE 30, 2020

NOTES

1. THE PURPOSE OF THIS MAP WAS TO SHOW THE EXISTING CONDITIONS FOR 1791 BLANKENSHIP ROAD.
2. THE BASIS OF BEARINGS WAS PER THE PLAT OF "PARSONS ADDITION," CLACKAMAS COUNTY RECORDS.
3. LOCAL DATUM WAS ESTABLISHED BY CITY OF WEST LINN SANITARY SEWER MAP INFORMATION ON MANHOLE 9B-15-5, IN THE INTERSECTION OF BLANKENSHIP RD. & 13TH ST., RIM=198.93 CITY OF WEST LINN DATUM.
4. THIS MAP WAS PREPARED FOR THE EXCLUSIVE USE OF JEREMY BARNETT.
5. THIS MAP WAS PREPARED BY PLAT RECORDS, CALCULATED DATA, AND FIELD MEASUREMENTS, A RECORDED BOUNDARY SURVEY WILL NOT BE FILED.
6. ALL UTILITY LOCATIONS ARE SHOWN BY ABOVE GROUND FEATURES AND CITY OF PORTLAND MAPS. CMT TAKES NO RESPONSIBILITY OF UNDERGROUND LOCATION. PLEASE NOTIFY THE UTILITY NOTIFICATION CENTER BEFORE ANY DIGGING 1-800-332-2344.

EXISTING CONDITIONS

1791 BLANKENSHIP RD

SW 1/4 SEC 35, T 2 S, R 1 E, W.M.
CITY OF WEST LINN
CLACKAMAS COUNTY, OREGON
OCTOBER 6, 2017
DRAWN: DSS/RLMc CHECKED: DSS
SCALE 1"=20' ACCOUNT # 227
Y:\227-005\DWG\227005BASE.DWG

CMT SURVEYING AND CONSULTING
9136 SE ST HELENS ST, SUITE J
PO BOX 3251
CLACKAMAS, OR 97015
PHONE (503) 850-4672 FAX (503) 850-4590

FOR PERMIT 09/28/2018

MARK	DATE	DESCRIPTION

REGISTERED ARCHITECT
PHILIP H. SYDNOR
PORTLAND, OREGON
5822
STATE OF OREGON

SURVEY

PERMIT SET
09/28/2018
SINGLE FAMILY
RESIDENCES
1791 BLANKENSHIP ROAD
WEST LINN, OREGON 97068

A0.1

INTEGRATE
ARCHITECTURE & PLANNING
www.integratearch.com
© Integrate Architecture & Planning, p.c.

PARTITION PLAT NO. _____

A REPLAT OF A PORTION OF TRACT 4, OF THE PLAT OF "WILLAMETTE TRACTS"
LOCATED IN THE SOUTHWEST ONE-QUARTER OF SECTION 35,
TOWNSHIP 2 SOUTH, RANGE 1 EAST, OF THE WILLAMETTE MERIDIAN,
CITY OF WEST LINN, CLACKAMAS COUNTY, OREGON

DATE: NOVEMBER 2, 2017

SURVEYED FOR: JEREMY BARNETT
PO BOX 258
OREGON CITY, OR 97045

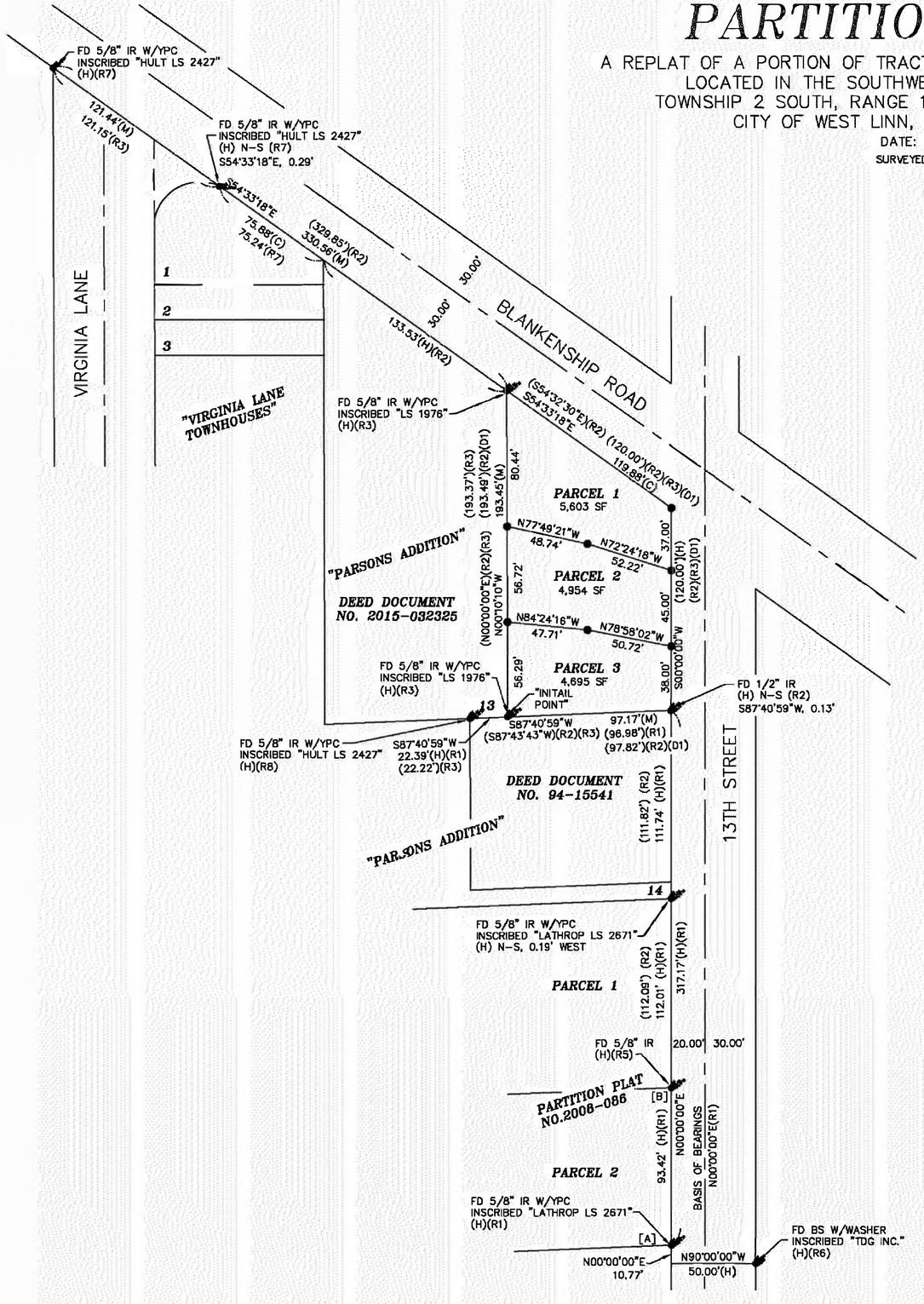

LEGEND

- ● FOUND MONUMENTS AS NOTED
- ● 5/8" X 30" IRON ROD WITH YPC INSCRIBED "CMT 60310" SET ON: _____

BS = BRASSSCREW
IR = IRON ROD
IP = IRON PIPE
FD = FOUND
SN = SURVEY NUMBER, WASHINGTON COUNTY RECORDS
(M) = MEASURED
(C) = CALCULATED
(H) = HELD
(R1) = REFERENCE SURVEY NUMBER OR PLAT NAME
( ) = RECORD DATA
N-S = NORTH-SOUTH
SF = SQUARE FEET

REFERENCE SURVEYS

(R1) PARTITION PLAT NO. 2008-086
(R2) PLAT OF "PARSONS ADDITION"
(R3) SN 24783
(R4) SN 5090
(R5) SN 12283
(R6) PLAT OF "TENTH STREET CENTRE"
(R7) PLAT OF "VIRGINIA LANE TOWNHOUSES"
(D1) DOCUMENT NO. 2004-103500

N

SCALE
50 0 25 50
1 INCH = 50 FEET

NARRATIVE

THE PURPOSE OF THIS SURVEY IS TO REESTABLISH AND MONUMENT THE BOUNDARY OF THE PROPERTY DESCRIBED IN DOCUMENT NO. 2004-103500, CLACKAMAS COUNTY DEED RECORDS, BEING A PORTION OF TRACT 4 "WILLAMETTE TRACTS", CLACKAMAS COUNTY PLAT RECORDS AND TO PARTITION AND MONUMENT THE SAME.

THE BASIS OF BEARINGS AND WEST RIGHT OF WAY LINE OF 13TH STREET, I HELD THE RECORD BEARING OF N 00°00'00 E, PER PARTITION PLAT NO. 2008-086 (R1) BETWEEN A 5/8" IRON ROD FOUND AT THE SOUTHEAST CORNER OF PARCEL 2 OF SAID PLAT AT [A], AND A 5/8" IRON ROD AT THE NORTHEAST CORNER OF SAID PARCEL 2 OF SAID PLAT AT [B], AS SHOWN.

TO ESTABLISH THE EAST LINE OF THE SUBJECT PROPERTY, BEING THE WEST RIGHT OF WAY LINE OF 13TH STREET, I HELD RECORD BEARING (N 00°00'00" E) AND RECORD DISTANCE (317.17') PER (R1) FROM THE SOUTHEAST CORNER OF SAID PARCEL 2 OF SAID PLAT TO THE SOUTHEAST CORNER OF THE SUBJECT PROPERTY. I THEN WENT RECORD BEARING (N 00°00'00" E) PER (R1) AND RECORD DISTANCE (120.00') PER (D1) TO ESTABLISH THE NORTHEAST CORNER OF THE SUBJECT PROPERTY, AS SHOWN.

TO ESTABLI SH THE SOUTH LINE OF THE SUBJECT PROPERTY, I HELD THE MONUMENT FOUND NEAR THE SOUTHEAST CORNER OF THE SUBJECT PROPERTY AND THE MONUMENT HELD AT THE SOUTHEAST CORNER OF LOT 13 "PARSONS ADDITION" (R2), CLACKAMAS COUNTY PLAT RECORDS, AS SHOWN.

TO ESTABLISH THE WEST LINE OF THE SUBJECT PROPERTY, I HELD THE MONUMENT AT THE SOUTHEAST CORNER OF LOT 13, "PARSONS ADDITION" (R2), AND THE NORTHEAST CORNER OF SAID LOT AND PLAT, AS SHOWN.

TO ESTABLISH THE NORTHERLY LINE OF THE SUBJECT PROPERTY, BEING THE SOUTHERLY RIGHT OF WAY LINE OF BLANKENSHIP ROAD, I HELD THE MONUMENT FOUND AT THE NORTHEAST CORNER OF SAID LOT AND PLAT, AND THE MONUMENT ESTABLISHED AT THE NORTHEAST CORNER OF THE SUBJECT PROPERTY, AS SHOWN.

PROFESSIONAL LAND SURVEYOR
DRAFT
OREGON
JULY 11, 2017
DONALD SCOTT SORENSON
60310

RENEWAL DATE: JUNE 30, 2020

SHEET 1 OF 2

CMT SURVEYING AND CONSULTING
20330 SE HIGHWAY 212
DAMASCUS, OR 97089
PHONE (503) 850-4672 FAX (503) 850-4590
Y:\227-005\dwg\227-005PART1.dwg---DSS

FOR PERMIT 09/28/2018

MARK	DATE	DESCRIPTION

REGISTERED ARCHITECT
PHILIP H. SYDNOR
PORTLAND, OREGON
5822
STATE OF OREGON

PLOT PARTITION MAP

PERMIT SET
09/28/2018
SINGLE FAMILY RESIDENCES
1791 BLANKENSHIP ROAD
WEST LINN, OREGON 97068

A0.2

INTEGRATE
ARCHITECTURE & PLANNING
www.integratearch.com

© Integrate Architecture & Planning, p.c.

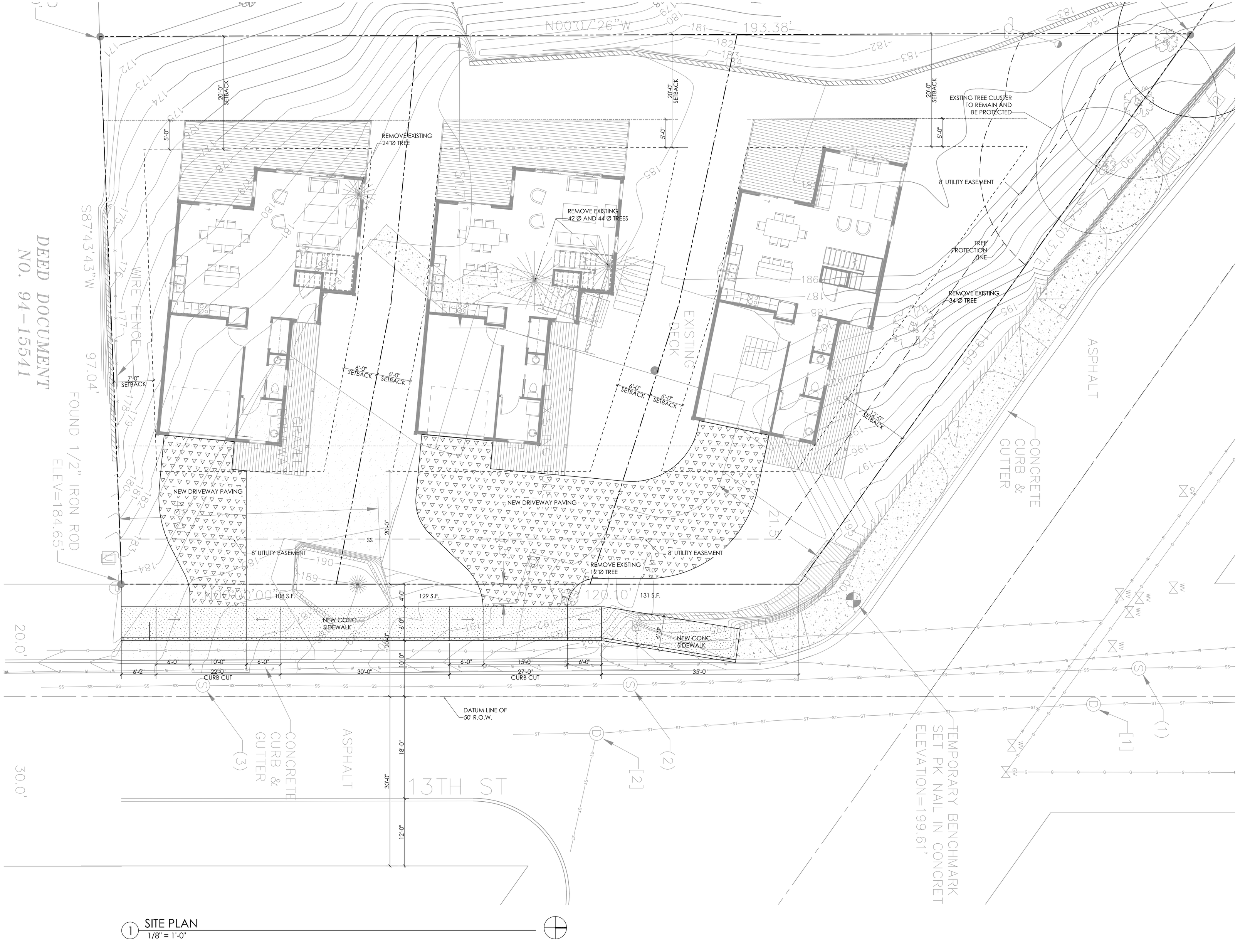

1 SITE PLAN
1/8" = 1'-0"

MARK	DATE	DESCRIPTION

REGISTERED ARCHITECT
PHILIP H. SYDNOR
PORTLAND, OREGON
5822
STATE OF OREGON

SITE PLAN

LU Submittal
03/12/2019
SINGLE FAMILY RESIDENCES
1791 BLANKENSHIP ROAD
WEST LINN, OREGON 97068

A1.1

INTEGRATE
ARCHITECTURE & PLANNING
www.integratearch.com
© Integrate Architecture & Planning, p.c.

1 SITE PLAN
1/8" = 1'-0"

MARK DATE DESCRIPTION

REGISTERED ARCHITECT
PHILIP H. SYDNOR
PORTLAND, OREGON
5822
STATE OF OREGON

TOPOGRAPHY
SITE SLOPE PLAN

PERMIT SET
03/12/2019
SINGLE FAMILY
RESIDENCES
1791 BLANKENSHIP ROAD
WEST LINN, OREGON 97068

A1.1a

INTEGRATE
ARCHITECTURE & PLANNING
www.integratearch.com
© Integrate Architecture & Planning, p.c.

1 EXISTING TREE PLAN
1/8" = 1'-0"

MARK	DATE	DESCRIPTION

REGISTERED ARCHITECT
PHILIP H. SYDNOR
PORTLAND, OREGON
5822
STATE OF OREGON

EXSITING TREE PLAN

PERMIT SET
03/12/2019
SINGLE FAMILY RESIDENCES
1791 BLANKENSHIP ROAD
WEST LINN, OREGON 97068

A1.1b

INTEGRATE
ARCHITECTURE & PLANNING
www.integratearch.com
© Integrate Architecture & Planning, p.c.

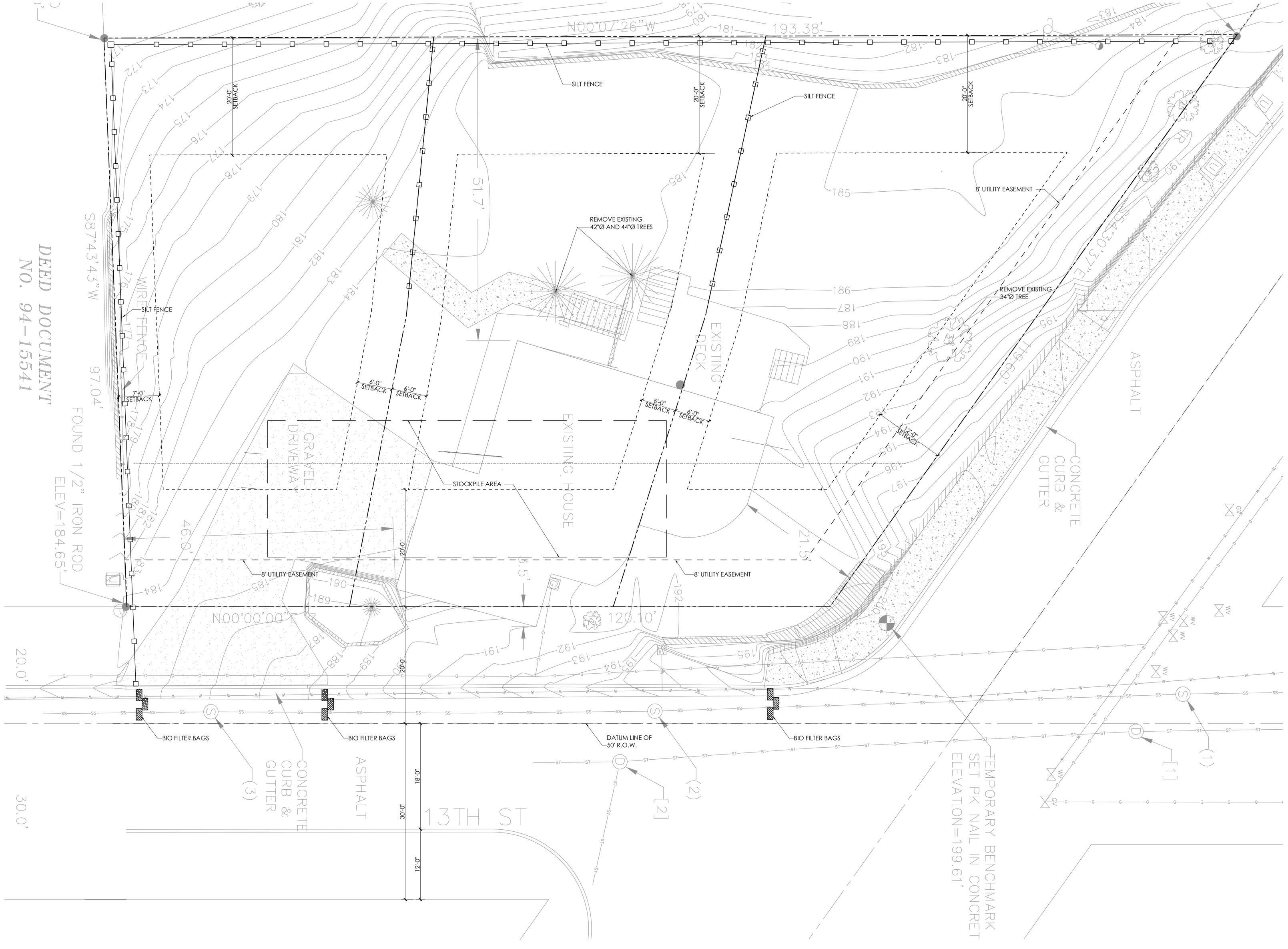

1 SITE PLAN
1/8" = 1'-0"

SITE SUMMARY

DEED DOCUMENT NO. 94-15541

MARK	DATE	DESCRIPTION

REGISTERED ARCHITECT
PHILIP H. SYDNOR
PORTLAND, OREGON
5822
STATE OF OREGON

GRADING AND EROSION CONTROL

PERMIT SET
03/12/2019
SINGLE FAMILY RESIDENCES
1791 BLANKENSHIP ROAD
WEST LINN, OREGON 97068

A1.1c

INTEGRATE
ARCHITECTURE & PLANNING
www.integratearch.com
© Integrate Architecture & Planning, p.c.

PROPERTY LINE

BLANKENSHIP RD

13TH STREET

RAINWATER LEADER

FLOW THRU PLANTER, SEE CIVIL DRAWINGS

8' UTILITY EASEMENT

(N) WATER METER

(E) GAS METER

(N) RELOCATED WATER METER

RELOCATE (E) WATER METER

REF.

TR

UTILITY LEGEND

ST ——— ST	(E) STORM SEWER LINE
D	(E) STORM MANHOLE
SS ——— SS	(E) SANITARY SEWER LINE
S	(E) SANITARY MANHOLE
W ——— W	(E) WATER LINE
W	(E) WATER METER
WV	(E) WATER VALVE
G ——— G	(E) UNDERGROUND GAS LINE
G	(E) GAS METER
GV	(E) GAS VALVE
U	(E) UTILITY VAULT
	(E) POWER POLE
G	(N) GAS LINE
SS	(N) SANITARY SEWER
W	(W) WATER LINE
OV. FL.	STORM OVERFLOW (DAYLIGHT AT STREET)

COORDINATE UNDERGROUND UTILITIES WITH GRADING, EXCAVATION AND OTHER SITE WORK.

MARK	DATE	DESCRIPTION

REGISTERED ARCHITECT
PHILIP H. SYDNOR
PORTLAND, OREGON
5822
STATE OF OREGON

UTILITY PLAN

PERMIT SET
03/12/2019
SINGLE FAMILY RESIDENCES
1791 BLANKENSHIP ROAD
WEST LINN, OREGON 97068

A1.2

INTEGRATE
ARCHITECTURE & PLANNING
www.integratearch.com
© Integrate Architecture & Planning, p.c.

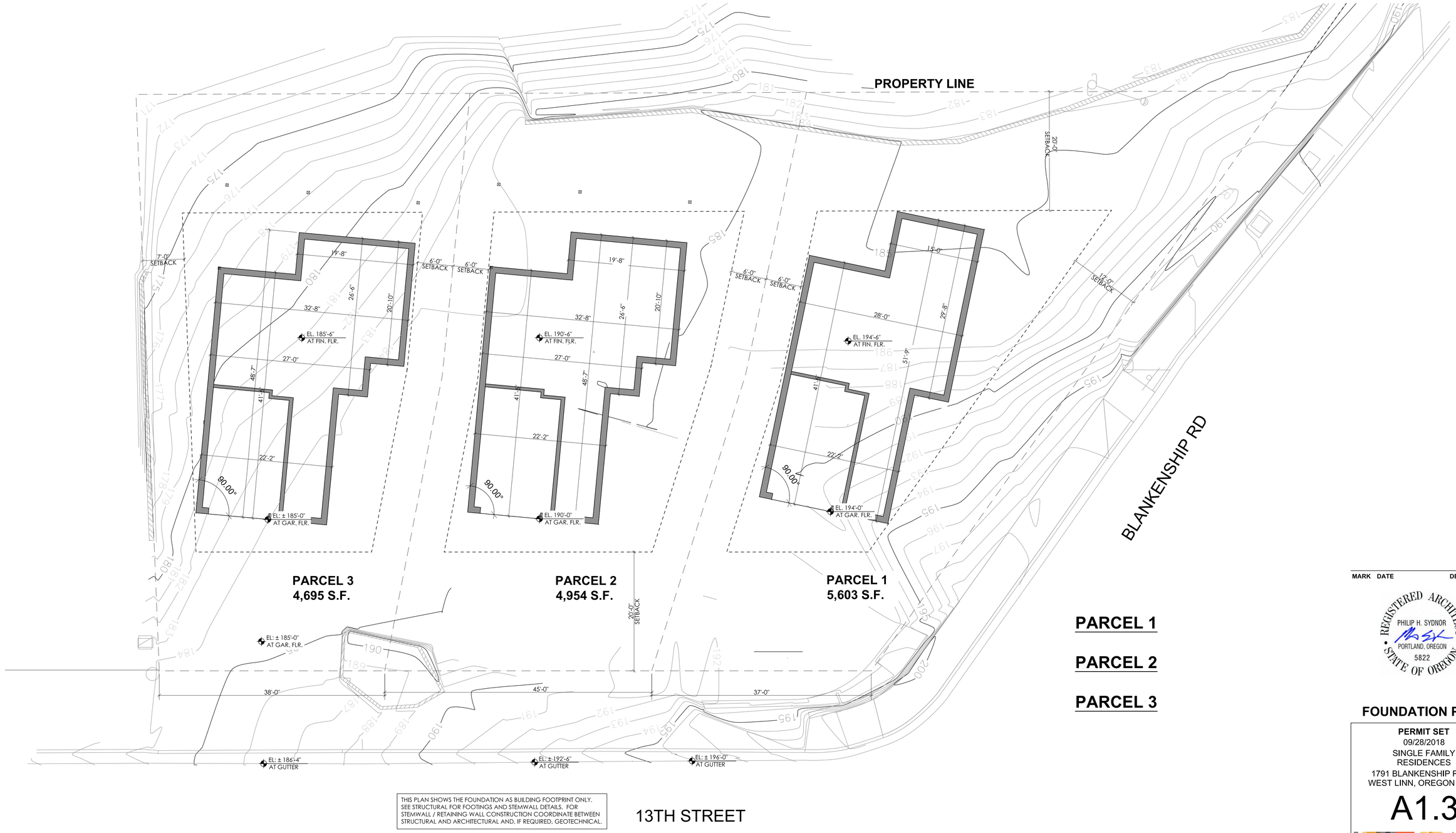

PARCEL 1

PARCEL 2

PARCEL 3

THIS PLAN SHOWS THE FOUNDATION AS BUILDING FOOTPRINT ONLY. SEE STRUCTURAL FOR FOOTINGS AND STEMWALL DETAILS. FOR STEMWALL / RETAINING WALL CONSTRUCTION COORDINATE BETWEEN STRUCTURAL AND ARCHITECTURAL AND, IF REQUIRED, GEOTECHNICAL.

1 FOUNDATION PLAN
1/8" = 1'-0"

MARK	DATE	DESCRIPTION

REGISTERED ARCHITECT
PHILIP H. SYDNOR
PORTLAND, OREGON
5822
STATE OF OREGON

FOUNDATION PLAN

PERMIT SET
09/28/2018
SINGLE FAMILY RESIDENCES
1791 BLANKENSHIP ROAD
WEST LINN, OREGON 97068

A1.3

INTEGRATE
ARCHITECTURE & PLANNING
www.integratearch.com
© Integrate Architecture & Planning, p.c.

THIS DETAIL DRAWING SHALL NOT BE ALTERED OR CHANGED IN ANY MANNER EXCEPT BY THE CITY ENGINEER. IT IS THE RESPONSIBILITY OF THE USER TO ACQUIRE THE MOST CURRENT VERSION OF THE DETAIL.

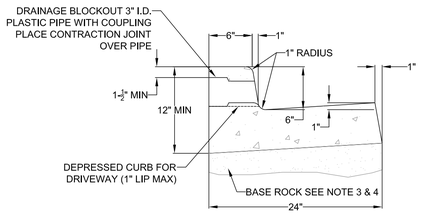

FLUSH, DEPRESSED CURB FOR WHEELCHAIR RAMP 2% MAX SLOPE

TYPICAL CURB AND GUTTER

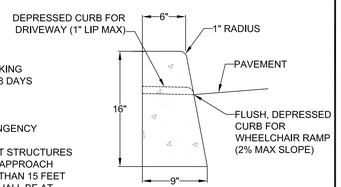

TYPICAL STRAIGHT CURB

NOTE:

1. CONCRETE SHALL HAVE A BREAKING STRENGTH OF 3300 PSI AFTER 28 DAYS
2. CONTRACTION JOINTS:
   A) TO BE PROVIDED:
      -AT EACH POINT OF TANGENCY
      -AT EACH COLD JOINT
      -AT EACH SIDE OF INLET STRUCTURES
      -AT BOTH SIDES OF AN APPROACH
   B) SPACING TO BE NOT MORE THAN 15 FEET
   C) THE DEPTH OF THE JOINT SHALL BE AT LEAST 1/3 OF THE THICKNESS OF CONCRETE
   D) EXPANSION JOINTS SHALL NOT BE USED
3. BASE ROCK - 1-1/2"-0", 95% COMPACTION PER AASHTO T-180 ROCK SHALL BE TO SUBGRADE OF THE STREET SECTION OR 4" IN DEPTH, WHICHEVER IS GREATER
4. FULL DEPTH PREPARED ROCK SECTION SHALL EXTEND 1' HORIZONTALLY BEYOND BOTH SIDES OF CURB AND GUTTER
5. DRAINAGE BLOCK - 3" DIA. PLASTIC PIPE
   A) DRAINAGE ACCESS THROUGH EXISTING CURBS SHALL BE DONE BY:
      -CORE DRILLING
      -VERTICAL SAWCUT OF CURB 24" EACH SIDE OF DRAIN AND RE-POURED TO FULL DEPTH OF CURB
6. STAMP TOP OF CURB WITH "W" AT WATER SERVICE CROSSING AND "S" AT SANITARY LATERAL CROSSING

TYPICAL CURBS

City of West Linn

DATE: 2010
DRAWING NO. WL-501
FILE NO.

THIS DETAIL DRAWING SHALL NOT BE ALTERED OR CHANGED IN ANY MANNER EXCEPT BY THE CITY ENGINEER. IT IS THE RESPONSIBILITY OF THE USER TO ACQUIRE THE MOST CURRENT VERSION OF THE DETAIL.

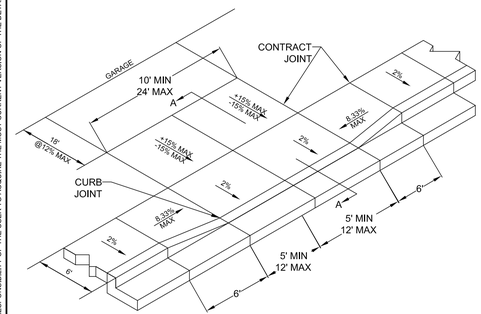

SIDEWALK ADJACENT TO CURB

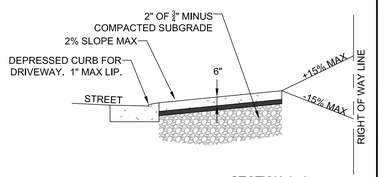

SECTION A-A

NOTE:

1. CONCRETE SHALL HAVE A MINIMUM BREAKING STRENGTH OF 3300 PSI AFTER 28 DAYS 6 SACK MIX
2. CURB SHALL BE TROWELED JOINT WITH MIN. 1/2" RADIUS ALONG BACK OF CURB
3. DRIVEWAY SHALL BE A MINIMUM 6" THICK
4. DRIVEWAY CURB CUT SHALL COMPLY WITH THE CONDITIONS OF 5.0070, "WIDTH AND LOCATION OF CURB CUTS"
5. FOR REPLACEMENT OF EXISITNG APPROACH:

   A. MUST MEET CURRENT ADA REQUIREMENTS TO GREATEST DEGREE POSSIBLE
   B. DAMAGED ROADWAY MUST BE SAWCUT AND REPAVED WITH CLASS C HOT MIX ASPHALT

RESIDENTIAL DRIVEWAY WITH SIDEWALK ADJACENT TO CURB

City of West Linn

DATE: 2010
DRAWING NO. WL-503B
FILE NO.

THIS DETAIL DRAWING SHALL NOT BE ALTERED OR CHANGED IN ANY MANNER EXCEPT BY THE CITY ENGINEER. IT IS THE RESPONSIBILITY OF THE USER TO ACQUIRE THE MOST CURRENT VERSION OF THE DETAIL.

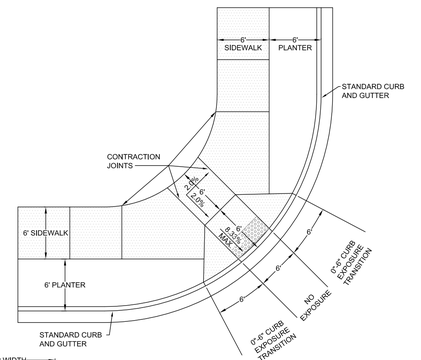

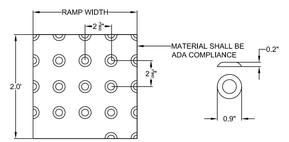

RAMP TEXTURE PATTERN DETAIL

TRUNCATED DOME DETAIL

NOTE:

1. LANDING AT TOP OF RAMP SHALL NOT EXCEED 2% IN ANY DIRECTION AND SHALL BE A MINIMUM OF 60" x 60".
2. RAMP CROSS SLOPE SHALL NOT EXCEED 2% (AS MEASURED PERPENDICULAR TO PEDESTRIAN TRAFFIC FLOW).
3. TRUNCATED DOME MUST EXTEND THE FULL WIDTH OF THE RAMP AND COVER THE FIRST 2 FEET OF THE RAMP CLOSEST TO THE STREET.
4. TRANSITIONS FROM THE RAMP TO THE WALKWAY, GUTTER, AND STREET MUST BE FLUSH (LEVEL) AND FREE OF ABRUPT LEVEL CHANGES.
5. THE GUTTER OR ADJACENT ROADWAY MUST HAVE A SLOPE OF NO MORE THAN 5 PERCENT (1:20) TOWARD THE RAMP.
6. FLARED SIDES ("WING") OF THE CURB RAMP SHALL NOT EXCEED 10% IN SLOPE (8.33% IF PEDESTRIAN TRAVEL IS REQUIRED OVER THEM PER ADA STANDARDS - I.E. IF MINIMUM 48" x 48" (FOR EXISTING SITES ONLY) LANDING IS NOT PROVIDED AT TOP OF RAMP).
7. CONCRETE STRENGTH SHALL BE 3300 PSI.
8. PLACE CONTRACTION JOINTS AS SHOWN ABOVE.
9. NO ABOVE GROUND UTILITIES ARE PERMITTED WITHIN RAMP AREA.
10. WHEN EITHER OPPOSING CURB RAMP HAS AN EXISTING TWIN RAMP, USE DETAIL WL-507B.

SINGLE CURB RAMP (ALLOWED WITH CITY ENGINEER APPROVAL ONLY)

City of West Linn

DATE: 2010
DRAWING NO. WL-507A
FILE NO.

FOR PERMIT 09/28/2018

MARK	DATE	DESCRIPTION

REGISTERED ARCHITECT
PHILIP H. SYDNOR
PORTLAND, OREGON
5822
STATE OF OREGON

RIGHT-OF-WAY DETAILS

PERMIT SET
09/28/2018
SINGLE FAMILY
RESIDENCES
1791 BLANKENSHIP ROAD
WEST LINN, OREGON 97068

A1.4

INTEGRATE
ARCHITECTURE & PLANNING
www.integratearch.com
© Integrate Architecture & Planning, p.c.

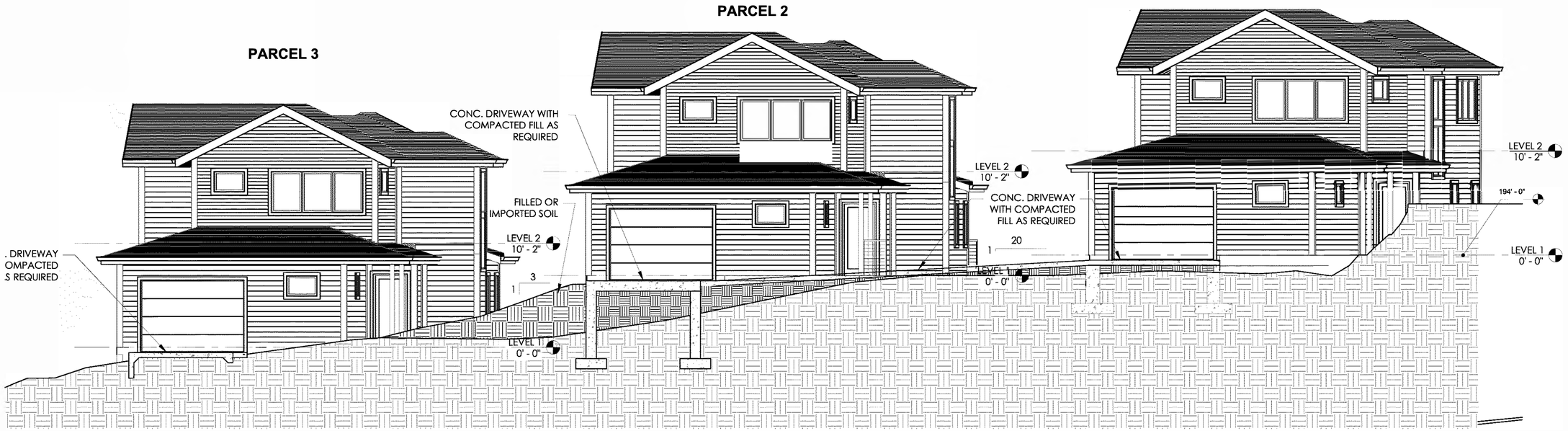

4 EAST ELEVATION
3/16" = 1'-0"

2 WEST ELEVATION
3/16" = 1'-0"

FOR PERMIT 09/28/2018

MARK	DATE	DESCRIPTION

REGISTERED ARCHITECT
PHILIP H. SYDNOR
PORTLAND, OREGON
5822
STATE OF OREGON

SITE ELEVATIONS

PERMIT SET
09/ 28/ 2018
SINGLE FAMILY
RESIDENCES
1791 BLANKENSHIP ROAD
WEST LINN, OREGON 97068

A1.4

INTEGRATE
ARCHITECTURE & PLANNING
www.integratearch.com
© Integrate Architecture & Planning, p.c.

ALL WORK SHALL CONFORM TO CODE AND INDUSTRY STANDARDS SET FORTH IN 2011 OREGON RESIDENTIAL SPECIALTY CODE (ORSC).

ALL WORK SPECIFIC TO A PARTICULAR TRADE OR BUILDING SYSTEM SHALL CONFORM TO THE APPROPRIATE REFERENCED STANDARD AS SHOWN IN ORSC CHAPTER 44 AND THE MANUFACTURER'S RECOMMENDATIONS.

IT IS THE CONTRACTOR'S RESPONSIBILITY TO VERIFY COMPATIBILITY AND/OR POTENTIAL CONFLICTS BETWEEN CHAPTER 44 REQUIREMENTS AND THE MANUFACTURER'S RECOMMENDATIONS.

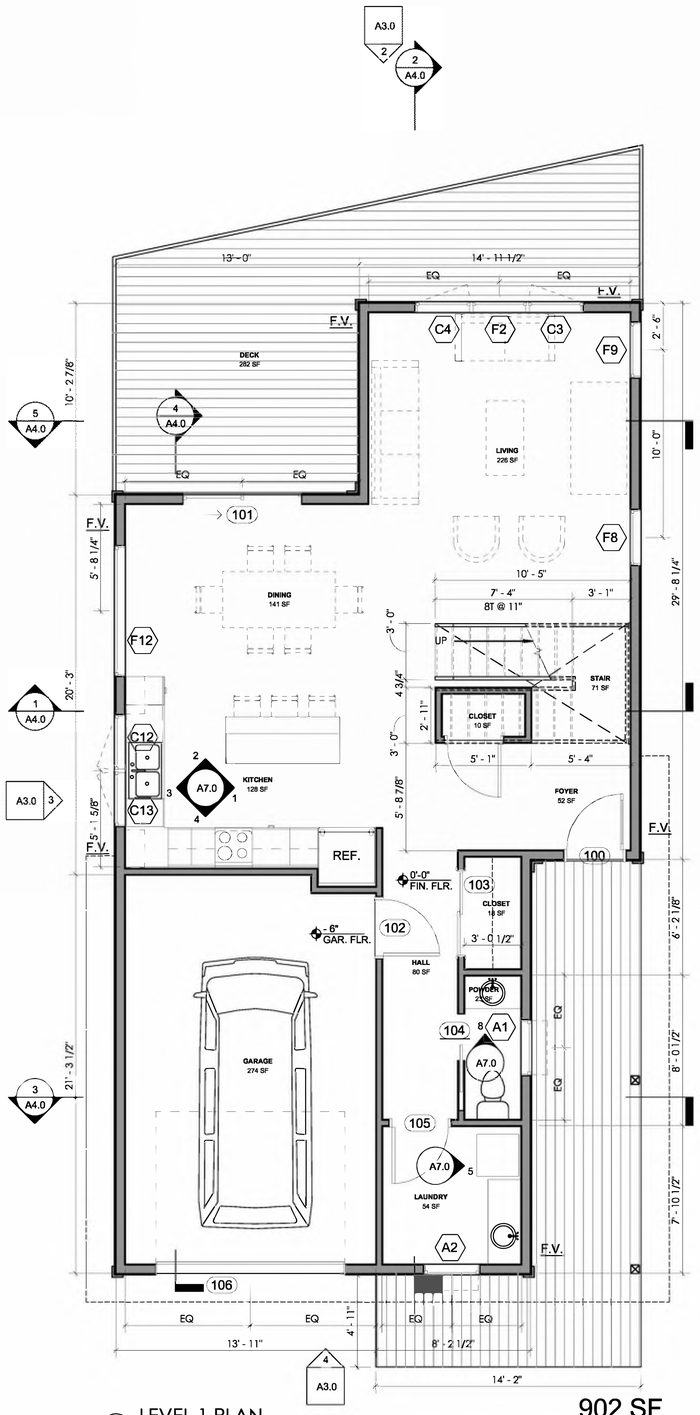

1 LEVEL 1 PLAN
1/4" = 1'-0"

902 SF

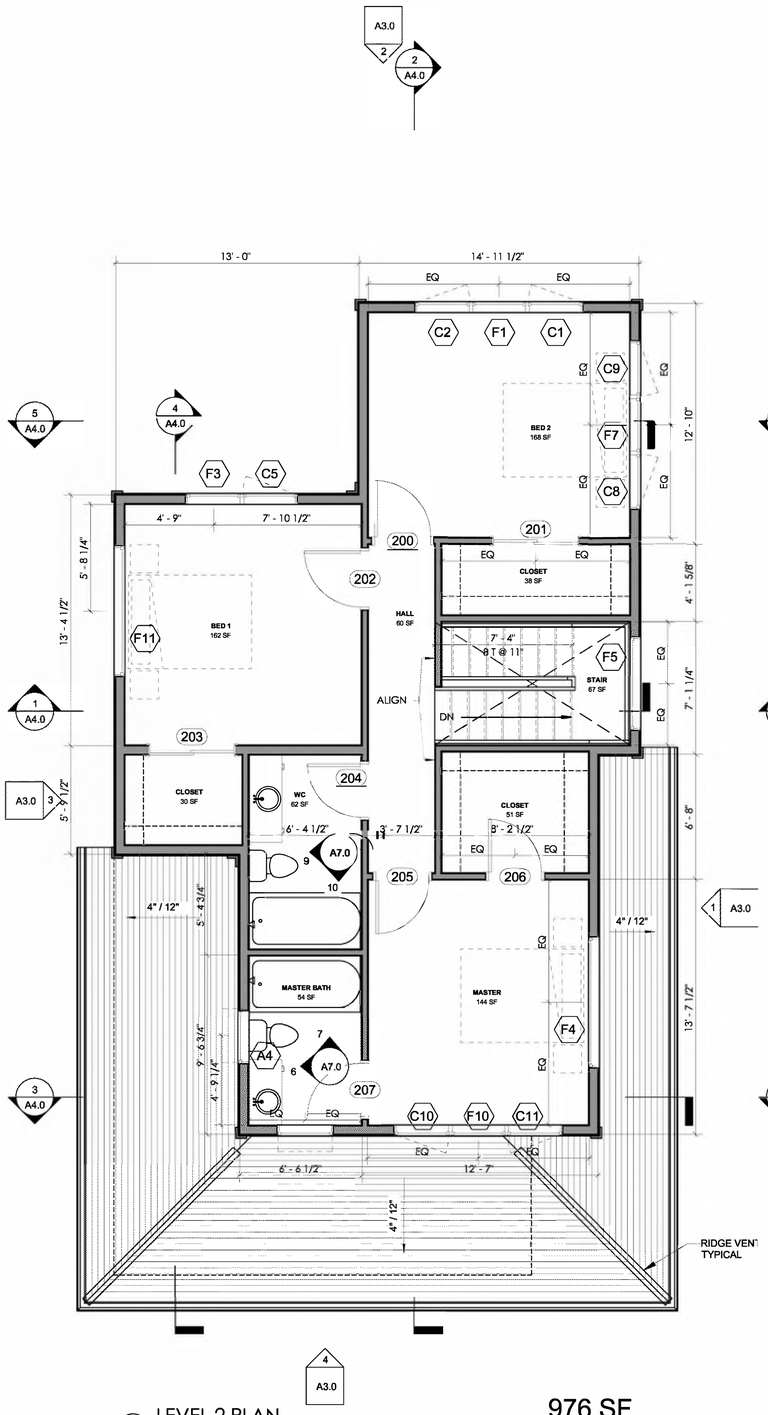

2 LEVEL 2 PLAN
1/4" = 1'-0"

976 SF

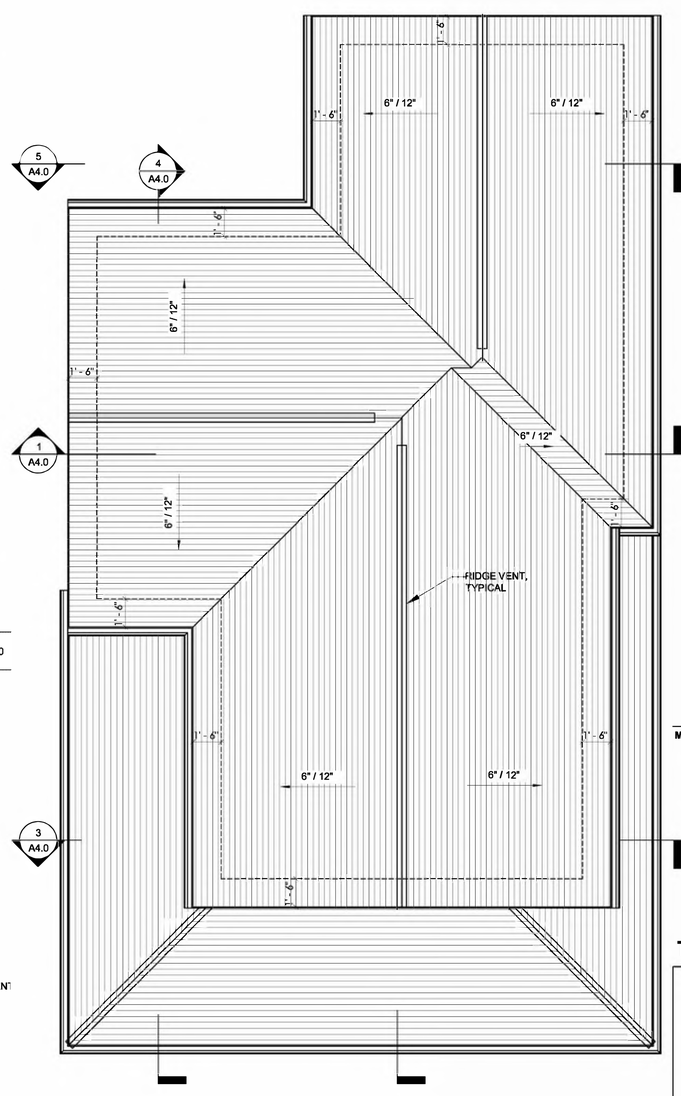

3 ROOF PLAN
1/4" = 1'-0"

FOR PERMIT 09/28/2018

MARK	DATE	DESCRIPTION

REGISTERED ARCHITECT
PHILIP H. SYDNOR
PORTLAND, OREGON
5822
STATE OF OREGON

TYP. BUILDING PLANS

PERMIT SET
09/28/2018
SINGLE FAMILY
RESIDENCES
1791 BLANKENSHIP ROAD WEST
LINN, OREGON 97068

A2.0

INTEGRATE
ARCHITECTURE & PLANNING
www.integratearch.com
© Integrate Architecture & Planning, p.c.

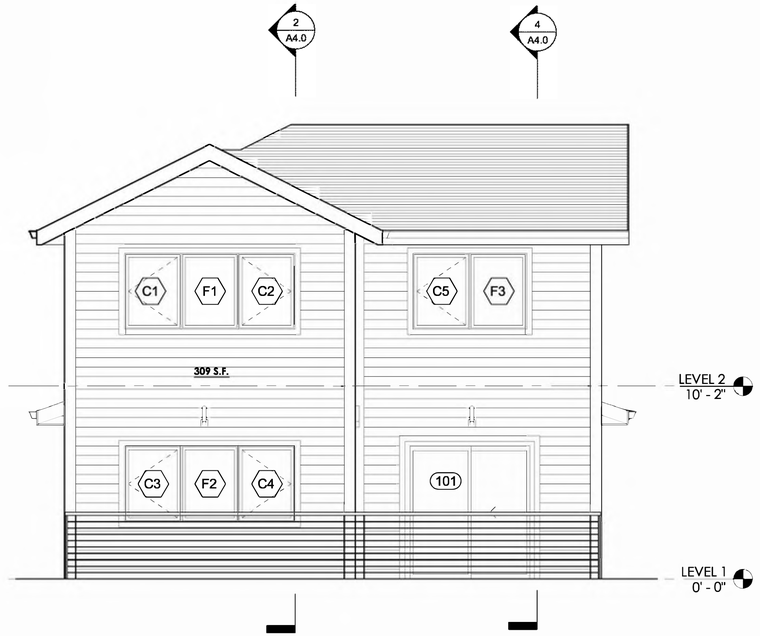

2 NORTH ELEVATION
1/4" = 1'-0"

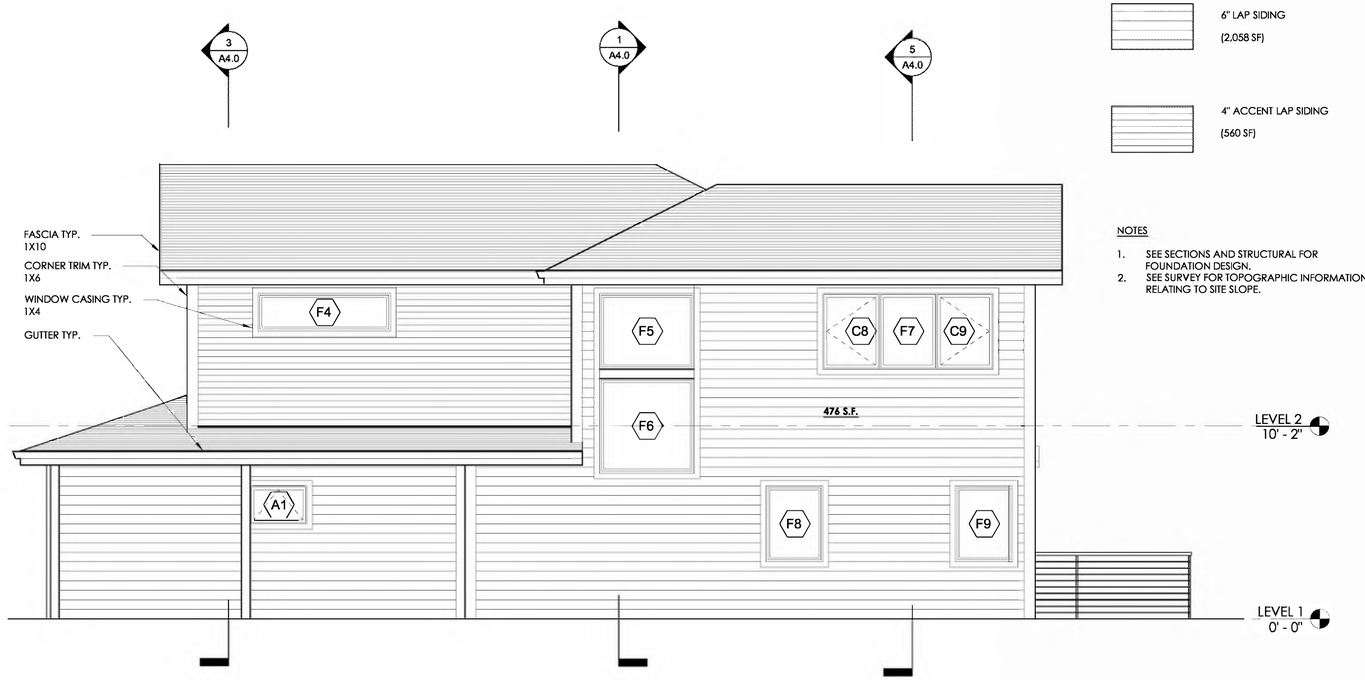

1 EAST ELEVATION
1/4" = 1'-0"

6" LAP SIDING
(2,058 SF)

4" ACCENT LAP SIDING
(560 SF)

NOTES

1. SEE SECTIONS AND STRUCTURAL FOR FOUNDATION DESIGN.
2. SEE SURVEY FOR TOPOGRAPHIC INFORMATION RELATING TO SITE SLOPE.

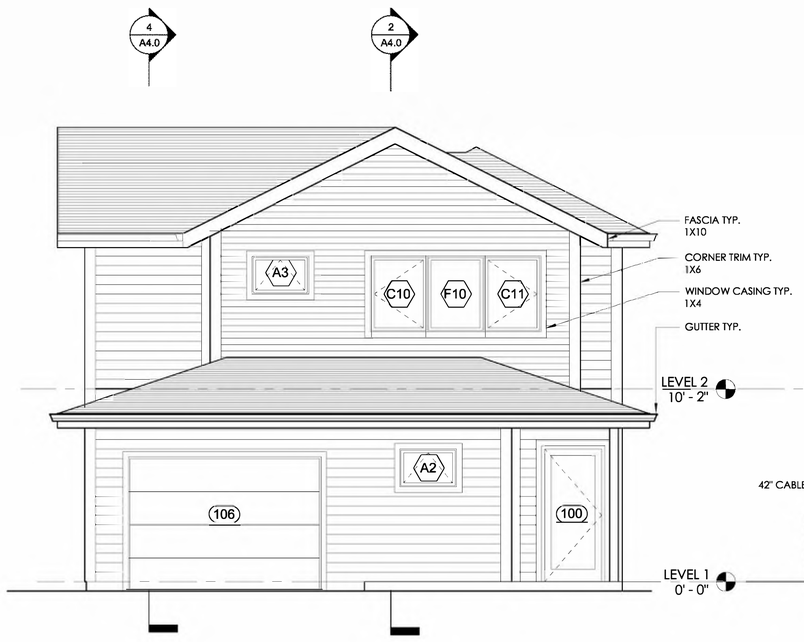

4 SOUTH ELEVATION
1/4" = 1'-0"

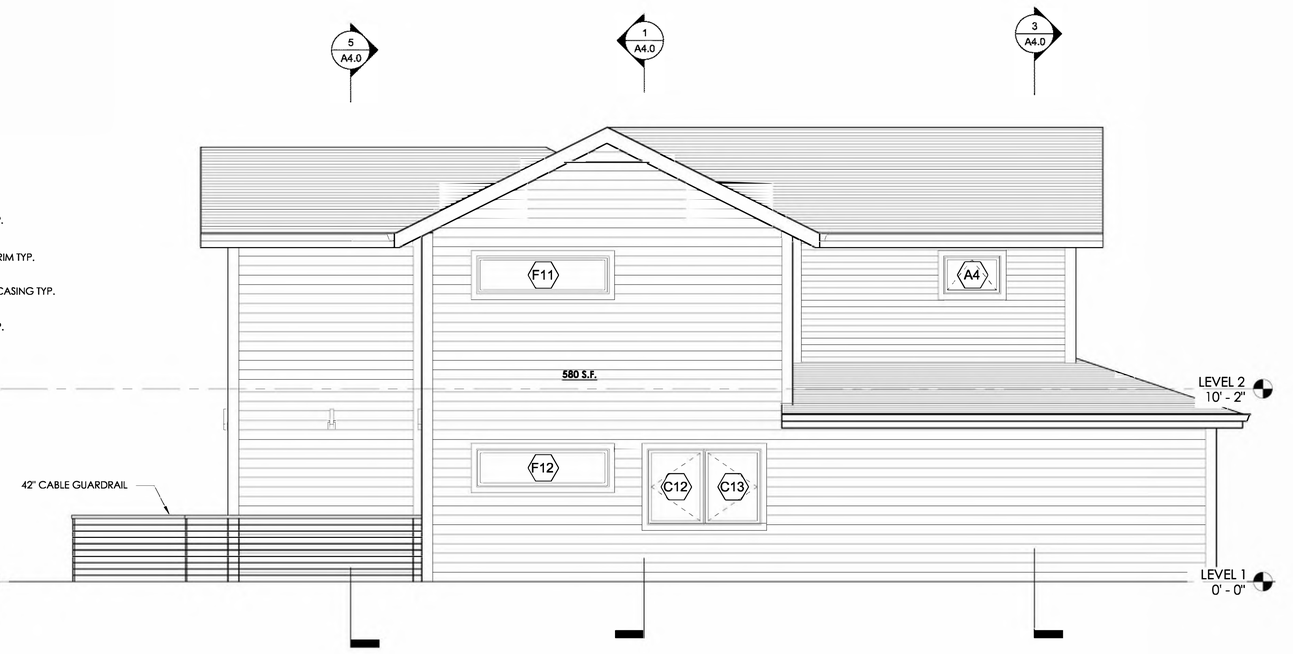

3 WEST ELEVATION
1/4" = 1'-0"

FOR PERMIT 09/28/2018

MARK	DATE	DESCRIPTION

REGISTERED ARCHITECT
PHILIP H. SYDNOR
PORTLAND, OREGON
5822
STATE OF OREGON

TYP. BUILDING ELEVATIONS

PERMIT SET
09/28/2018
SINGLE FAMILY
RESIDENCES
1791 BLANKENSHIP ROAD
WEST LINN, OREGON 97068

A3.0

INTEGRATE
ARCHITECTURE & PLANNING
www.integratearch.com
© Integrate Architecture & Planning, p.c.

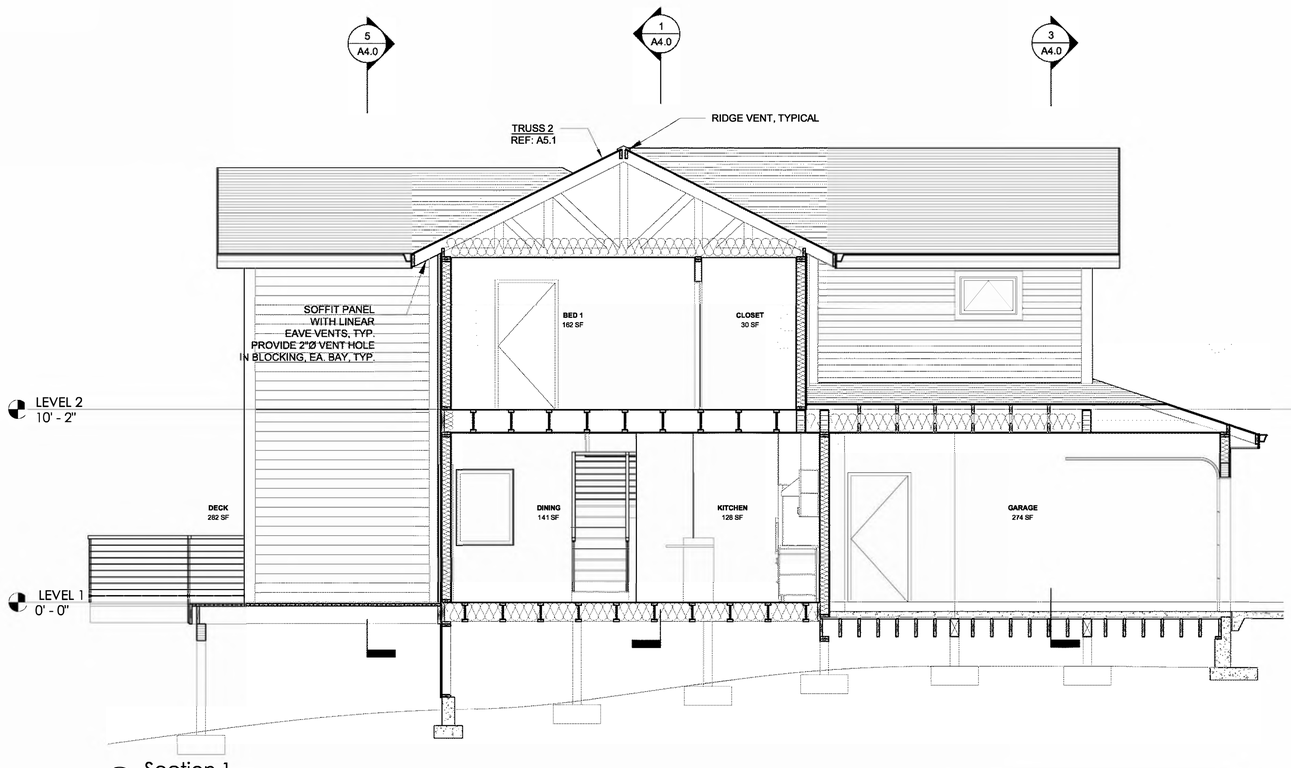

4 Section 1
1/4" = 1'-0"

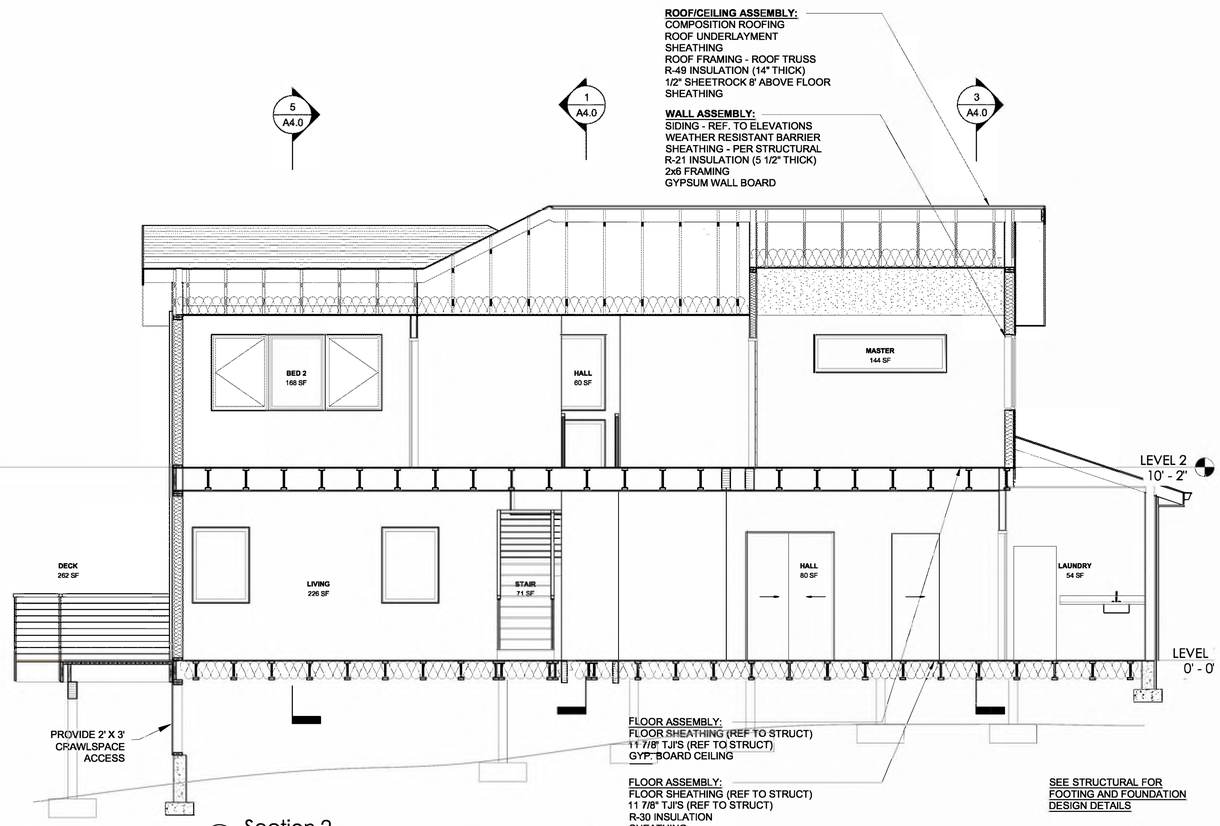

2 Section 2
1/4" = 1'-0"

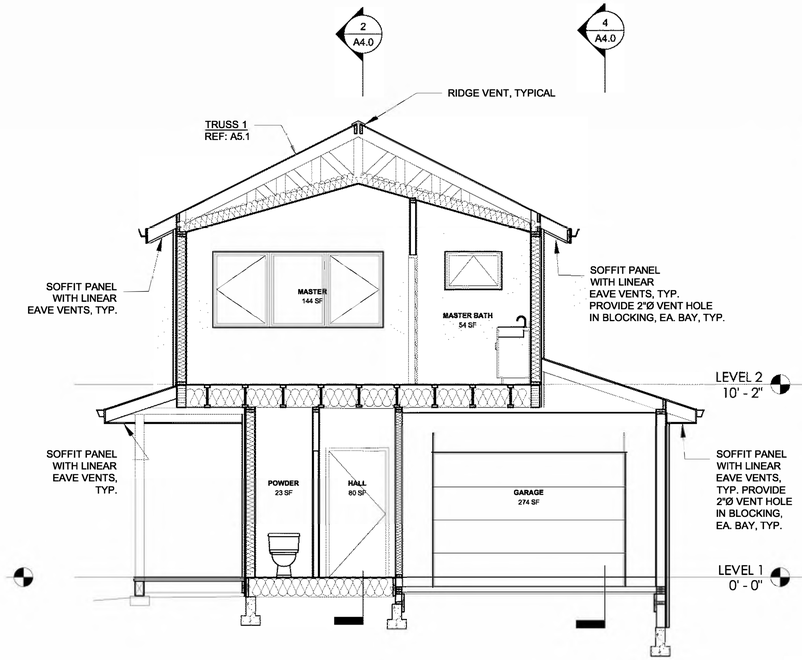

3 Section 3
1/4" = 1'-0"

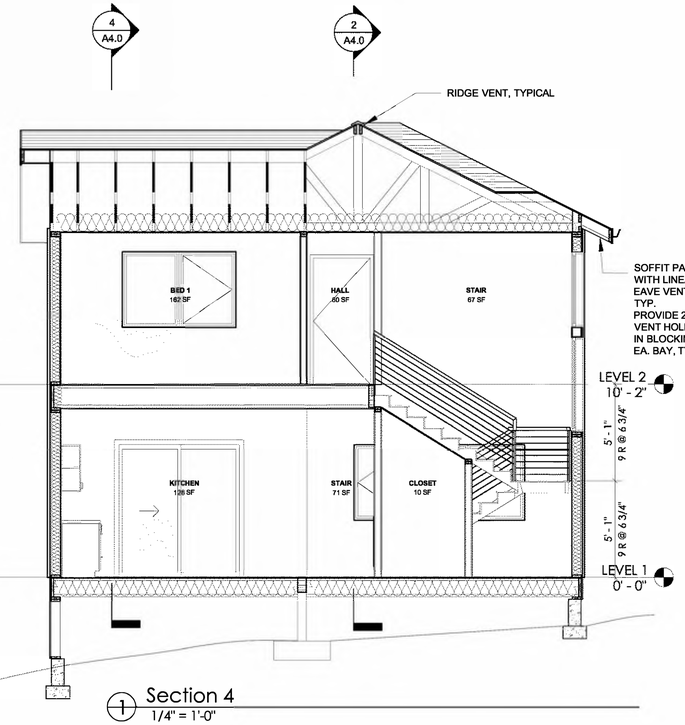

1 Section 4
1/4" = 1'-0"

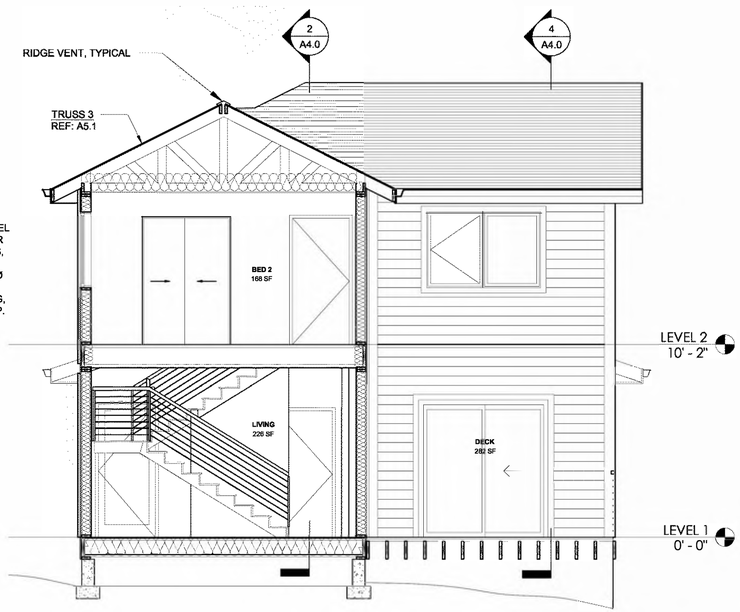

5 Section 5
1/4" = 1'-0"

FOR PERMIT 09/28/2018

MARK	DATE	DESCRIPTION

REGISTERED ARCHITECT
PHILIP H. SYDNOR
PORTLAND, OREGON
5822
STATE OF OREGON

TYP. BUILDING SECTIONS

PERMIT SET
09/28/2018
SINGLE FAMILY RESIDENCES
1791 BLANKENSHIP ROAD
WEST LINN, OREGON 97068

A4.0

INTEGRATE
ARCHITECTURE & PLANNING
www.integratearch.com
© Integrate Architecture & Planning, p.c.

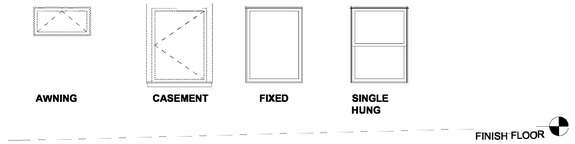

WINDOW TYPES
1/4" = 1'-0"

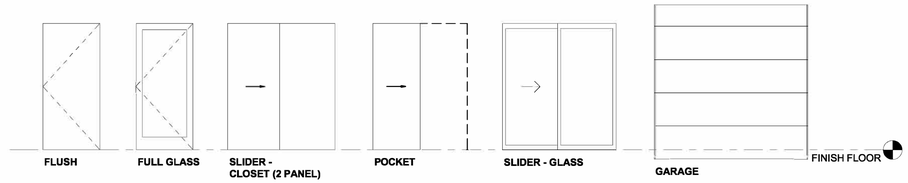

DOOR TYPES
1/4" = 1'-0"

WINDOW SCHEDULE UNIT A

MARK	Level	ROOM NAME	TYPE	SIZE			COMMENTS
				WIDTH	HEIGHT	SILL HT.	
LEVEL 1							
A1	LEVEL 1	POWDER	AWNING	3' - 0"	2' - 0"	5' - 0"	TEMPERED
A2	LEVEL 1	LAUNDRY	AWNING	3' - 0"	2' - 0"	5' - 0"	
C3	LEVEL 1	DECK	CASEMENT	3' - 0"	4' - 0"	3' - 0"	
C4	LEVEL 1	LIVING	CASEMENT	3' - 0"	4' - 0"	3' - 0"	
C12	LEVEL 1	KITCHEN	CASEMENT	3' - 0"	4' - 0"	3' - 0"	
C13	LEVEL 1	KITCHEN	CASEMENT	3' - 0"	4' - 0"	3' - 0"	
F2	LEVEL 1	DECK	FIXED	3' - 0"	4' - 0"	3' - 0"	
F6	LEVEL 1	STAIR	FIXED	5' - 0"	5' - 0"	7' - 8"	
F8	LEVEL 1	LIVING	FIXED	3' - 0"	4' - 0"	3' - 0"	
F9	LEVEL 1	LIVING	FIXED	3' - 0"	4' - 0"	3' - 0"	
F12	LEVEL 1	DINING	FIXED	7' - 0"	2' - 0"	5' - 0"	
LEVEL 2							
A3	LEVEL 2	MASTER BATH	AWNING	3' - 0"	2' - 0"	5' - 0"	TEMPERED
A4	LEVEL 2	MASTER BATH	AWNING	3' - 0"	2' - 0"	5' - 0"	TEMPERED
C1	LEVEL 2	BED 2	CASEMENT	3' - 0"	4' - 0"	3' - 0"	
C2	LEVEL 2	BED 2	CASEMENT	3' - 0"	4' - 0"	3' - 0"	
C5	LEVEL 2	BED 1	CASEMENT	3' - 0"	4' - 0"	3' - 0"	
C8	LEVEL 2	BED 2	CASEMENT	3' - 0"	4' - 0"	3' - 0"	
C9	LEVEL 2	BED 2	CASEMENT	3' - 0"	4' - 0"	3' - 0"	
C10	LEVEL 2	MASTER	CASEMENT	3' - 0"	4' - 0"	3' - 0"	
C11	LEVEL 2	MASTER	CASEMENT	3' - 0"	4' - 0"	3' - 0"	
F1	LEVEL 2	BED 2	FIXED	3' - 0"	4' - 0"	3' - 0"	
F3	LEVEL 2	BED 1	FIXED	3' - 0"	4' - 0"	3' - 0"	
F4	LEVEL 2	MASTER	FIXED	7' - 0"	2' - 0"	5' - 0"	
F5	LEVEL 2	STAIR	FIXED	5' - 0"	4' - 0"	3' - 0"	
F7	LEVEL 2	BED 2	FIXED	3' - 0"	4' - 0"	3' - 0"	
F10	LEVEL 2	MASTER	FIXED	3' - 0"	4' - 0"	3' - 0"	
F11	LEVEL 2	BED 1	FIXED	7' - 0"	2' - 0"	5' - 0"	

DOOR SCHEDULE UNIT A

MARK	ROOM NAME	TYPE	DIMENSIONS		
			WIDTH	HEIGHT	THICKNESS
LEVEL 1					
100	FOYER	GLASS FLUSH	3' - 0"	7' - 0"	0' - 1 1/2"
102	GARAGE	FLUSH	3' - 0"	6' - 8"	0' - 1 3/4"
103	HALL	SLIDER - CLOSET	4' - 6"	6' - 8"	0' - 1 1/2"
104	HALL	POCKET	2' - 6"	6' - 8"	0' - 1 1/2"
105	LAUNDRY	FLUSH	3' - 0"	6' - 8"	0' - 1 3/4"
106	GARAGE	GARAGE	10' - 0"	7' - 0"	0' - 1 1/2"
211	FOYER	FLUSH	2' - 10"	6' - 8"	0' - 1 3/4"
LEVEL 2					
200	BED 2	FLUSH	3' - 0"	6' - 8"	0' - 1 3/4"
201	CLOSET	SLIDER - CLOSET	4' - 6"	6' - 8"	0' - 1 1/2"
202	BED 1	FLUSH	3' - 0"	6' - 8"	0' - 1 3/4"
203	CLOSET	SLIDER - CLOSET	4' - 6"	6' - 8"	0' - 1 1/2"
204	WC	FLUSH	2' - 10"	6' - 8"	0' - 1 3/4"
205	MASTER	FLUSH	2' - 10"	6' - 8"	0' - 1 3/4"
206	MASTER	FLUSH	2' - 10"	6' - 8"	0' - 1 3/4"
207	MASTER BATH	FLUSH	2' - 10"	6' - 8"	0' - 1 3/4"

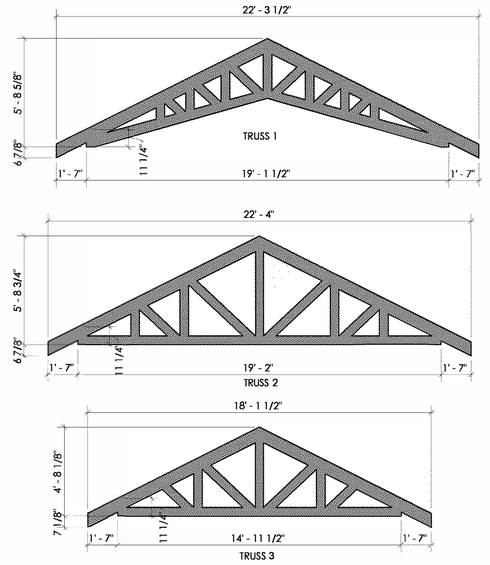

1 TRUSS SCHEDULE
1/4" = 1'-0"

FOR PERMIT 09/28/2018

MARK	DATE	DESCRIPTION

REGISTERED ARCHITECT
PHILIP H. SYDNOR
PORTLAND, OREGON
5822
STATE OF OREGON

TYP. SCHEDULES

PERMIT SET
09/28/2018
SINGLE FAMILY
RESIDENCES
1791 BLANKENSHIP ROAD
WEST LINN, OREGON 97068

A5.0

INTEGRATE
ARCHITECTURE & PLANNING
www.integratearch.com
© Integrate Architecture & Planning, p.c.

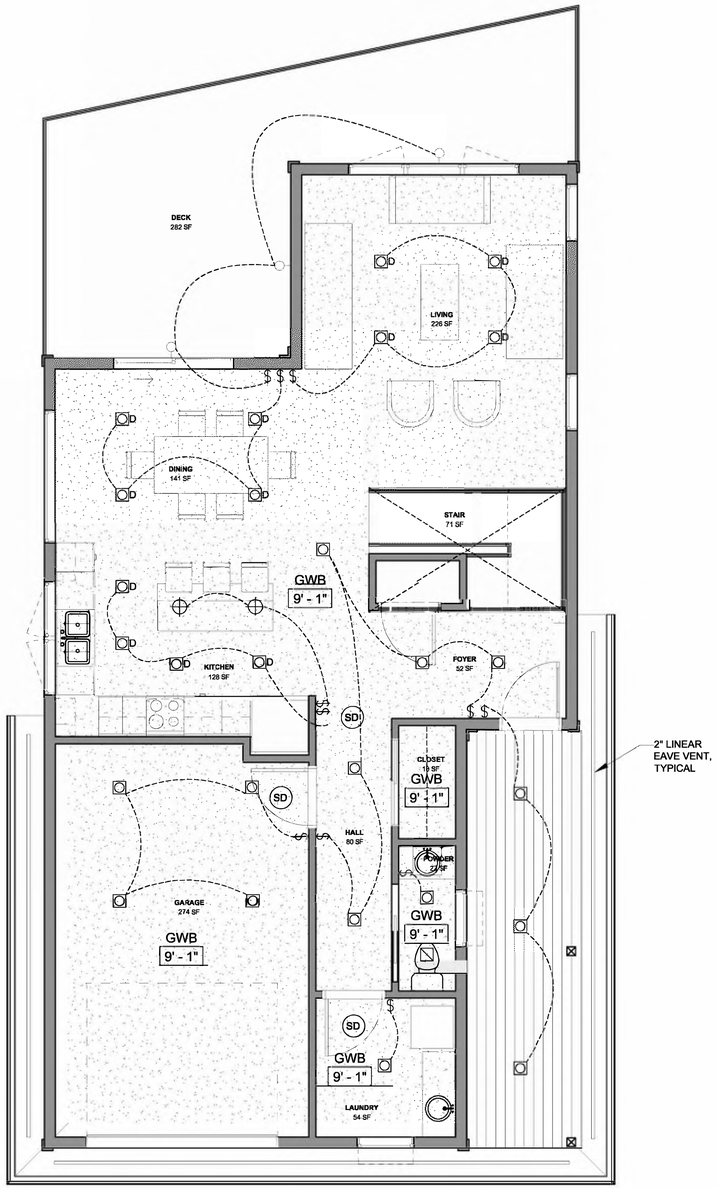

1 ENLARGED RCP - LEVEL 1
1/4" = 1'-0"

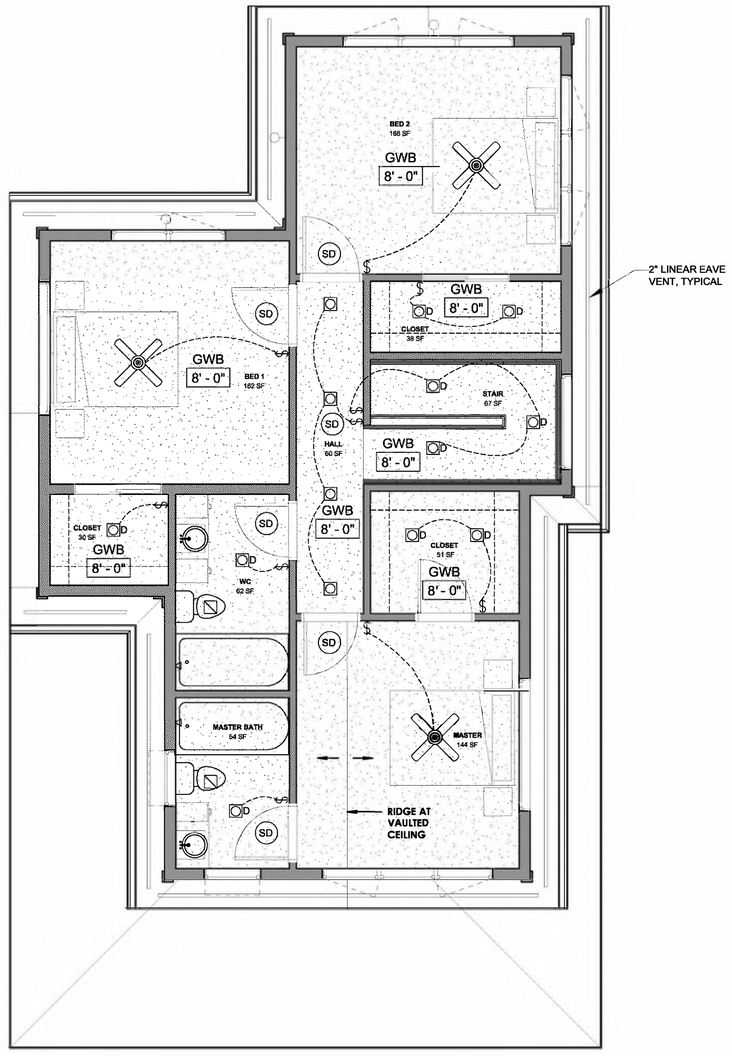

2 ENLARGED RCP - LEVEL 2
1/4" = 1'-0"

GENERAL NOTES

1. ALL CEILINGS ARE GYPSUM BOARD UNLESS OTHERWISE NOTED.
2. OUTLETS SHOWN ARE FOR SWITCHING PURPOSES. ALL OTHER OUTLETS TO BE LOCATED ACCORDING TO OREGON ELECTRICAL CODE. COORDINATE WITH OWNER FOR LOCATIONS.
3. PROVIDE SMOKE DETECTORS AS REQUIRED BY CODE
4. PROVIDE MECHANICAL VENTILATION IN FULL BATHROOMS PER ORSC, M1506.4

LEGEND

- 1t / 9'-0" — CEILING MATERIAL; CEILING TAG; CEILING HEIGHT
- GYPSUM BOARD CEILING
- T & G CEDAR
- RECESSED DOWNLIGHT
- RECESSED DIRECTIONAL DOWNLIGHT
- D — RECESSED DOWNLIGHT, ON DIMMER
- PENDANT LIGHT
- EXHAUST FAN
- FLUSH MOUNT LIGHT
- UNDER CABINET LIGHTING
- WALL MOUNT VANITY LIGHT
- WALL SCONCE - SEE INTERIOR ELEVATION FOR MOUNTING HEIGHT
- $ — ELECTRICAL SWITCH
- SD — SMOKE/ CARBON MONOXIDE DETECTOR
- CEILING FAN

FOR PERMIT 09/28/2018

MARK	DATE	DESCRIPTION

REGISTERED ARCHITECT
PHILIP H. SYDNOR
PORTLAND, OREGON
5822
STATE OF OREGON

TYP. REFLECTED CEILING PLANS

PERMIT SET
09/28/2018
SINGLE FAMILY RESIDENCES
1791 BLANKENSHIP ROAD
WEST LINN, OREGON 97068

A6.0

INTEGRATE
ARCHITECTURE & PLANNING
www.integratearch.com
© Integrate Architecture & Planning, p.c.

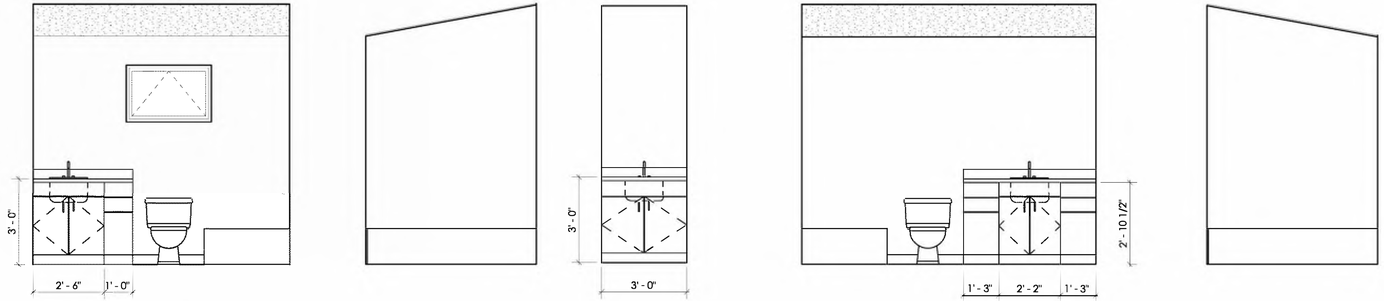

6 MASTER BATH 1
3/8" = 1'-0"

7 MASTER BATH 2
3/8" = 1'-0"

8 POWDER 1
3/8" = 1'-0"

9 WC 1
3/8" = 1'-0"

10 WC 2
3/8" = 1'-0"

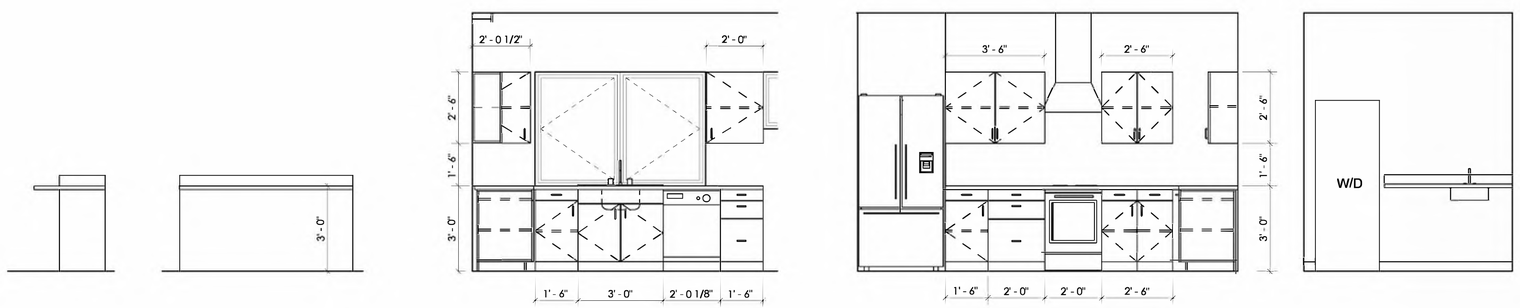

1 ISLAND 1
3/8" = 1'-0"

2 ISLAND 2
3/8" = 1'-0"

3 KITCHEN 1
3/8" = 1'-0"

4 KITCHEN 2
3/8" = 1'-0"

5 LAUNDRY 1
3/8" = 1'-0"

FOR PERMIT	09/28/2018

MARK	DATE	DESCRIPTION

REGISTERED ARCHITECT
PHILIP H. SYDNOR
PORTLAND, OREGON
5822
STATE OF OREGON

TYP. INTERIOR ELEVATIONS

PERMIT SET
09/28/2018
SINGLE FAMILY RESIDENCES
1791 BLANKENSHIP ROAD
WEST LINN, OREGON 97068

A7.0

INTEGRATE
ARCHITECTURE & PLANNING
www.integratearch.com
© Integrate Architecture & Planning, p.c.

STRUCTURAL NOTES

CODE: 2014 O.S.S.C. AND 2014 O.R.S.C.

DESIGN LOADS:

DEAD LOAD	- AS REQUIRED
LIVE LOAD	- 40 PSF
SNOW LOAD	- 25 PSF
SEISMIC	- D1 SEISMIC DESIGN CATEGORY PER O.R.S.C.
WIND:	- ASCE 7 120mph 3-SEC GUST EXP. B
SOIL BEARING	- 1500 PSF ASSUMED

EARTHWORK:

1. EXCAVATE TO LINES & LEVELS SHOWN ON DRAWINGS. ALL FOOTINGS TO BEAR ON FIRM UNDISTURBED NATIVE SANDS

CONCRETE:

1. REFERENCE SPECIFICATION - ACI 301, PLANT MIX PER ASTM C94.
2. STRENGTH:
   A. GROUND FLOOR SLAB - 3,000 PSI AT 28 DAYS
   B. FOOTINGS, WALLS 2,500 PSI @ 28 DAYS
3. REINFORCING - ASTM A615, GRADE 60. LAP BARS AS SHOWN ON PLAN WITH MIN. LAP OF 44 BAR DIAMETERS. PROVIDE 24" HOOKS AT CORNERS.
4. BOLTS:
   A. ANCHOR BOLTS - ASTM A307
   B. EXPANSION BOLTS - HILTI KWIK-BOLT-TZ. SPECIAL INSPECTION REQUIRED.
   C. ADHESIVE ANCHORS - HILTI-RE 500-SD OR SIMPSON SET-XP. SPECIAL INSPECTION REQUIRED.
5. COVER - AS FOLLOWS UNLESS SHOWN OTHERWISE ON PLANS.
   A. CONCRETE PLACED AGAINST EARTH - 3"
   B. FORMED CONCRETE AGAINST EARTH - 2".
   C. SECOND FLOOR SLAB - ¢
6. FINISH - PER ARCHITECT
7. SUBMITTALS: (4 COPIES)
   A. MIX DESIGNS PER IBC 1903
   B. REINFORCING SHOP DRAWINGS

CARPENTRY:

1. REFERENCE SPECIFICATION - IBC CHAPTER 23.
2. LUMBER - DOUGLAS FIR WITH MOISTURE CONTENT PER SPECIFICATION. ALL IN CONTACT WITH CONCRETE TO BE PRESSURE PRESERVATIVE TREATED. GRADE AS FOLLOWS
   A. POSTS AND BEAMS 6x AND GREATER - D.F. NO 1.
   B. POSTS AND BEAMS 4x SMALLER - D.F. NO 2 OR BETTER.
   C. STUDS - D.F. STUD GRADE OR BETTER
   D. PLATES & SILLS - DF NO. 2 P.T. AT CONCRETE SLAB.
      - KILN DRIED D.F. STANDARD TYPICAL
3. SHEATHING - PLYWOOD, ORIENTED STRANDBOARD OR APPROVED EQUAL.
   A. ROOF & WALL SHEATHING - APA 24/0. THICKNESS & NAILING PER PLAN.
   B. FLOOR SHEATHING - APA - 48/24. THICKNESS AND NAILING PER PLAN.
4. PLYWOOD WEB JOISTS- TRUS JOIST TJI SERIES OR APPROVED EQUAL. BRIDGING, BLOCKING & ERECTION BRACING PER MANUFACTURER'S RECOMMENDATION.
5. GLUE LAMINATED BEAMS - DOUGLAS FIR, COMBINATION 24F-V4, FABRICATED WITH WATER PROOF GLUE. FINISH PER PROJECT SPECIFICATIONS.
6. P.T. GLUE LAMINATED BEAMS - EUS 24F-V5MI / SP, FABRICATED WITH WATER PROOF GLUE. FINISH PER PROJECT SPECIFICATIONS.
7. GLUE LAMINATED COLUMNS - DOUGLAS FIR, COMBINATION 24F-V8, FABRICATED WITH WATER PROOF GLUE. FINISH PER PROJECT SPECIFICATIONS.
8. PARALLAM BEAMS - 2.0 E BY TRUS JOIST.
9. TIMBERSTRAND BEAMS - 1-1/2" LSE BY TRUS JOIST
10. TIMBERSTRAND BLOCKING - LSL 1-3/4" BY TRUS JOIST.
11. CONNECTIONS - SIMPSON STRONG-TIE OR USP, GALVANIZED.
12. FRAMING - PER INDUSTRY & CODE STANDARDS FOR ALL DETAILS NOT SHOWN. REFER TO IBC SECTIONS 2324, 2325 AND 2326.
13. NAILING - USE COMMON TYPE NAILS. MINIMUM NAILING PER IBC TABLE NO. 23-I-Q UNLESS NOTED OTHERWISE ON PLANS.

COMMON WIRE NAIL	PNEUMATIC NAIL DIAMETER	MINIMUM NAIL LENGTH	NAIL APPLICATION
30D COMMON	0.207"ø P-NAIL	4-1/2"	3X DECKING
40D COMMON	0.225"ø P-NAIL	5"	4X DECKING
20D COMMON	0.192"ø P-NAIL	4"	FRAMING
16D COMMON	0.162"ø P-NAIL	3-1/2"	FRAMING
10D COMMON	0.148"ø P-NAIL	3"	FRAMING
N/A	0.148"ø P-NAIL	2-3/8"	FLR SHEATHING
8D COMMON	0.131"ø P-NAIL	2-1/2"	ROOF SHEATHING
N/A	0.162"ø P-NAIL	3-1/2"	STRAPS

14. DRYING - PRIOR TO INSTALLATION OF GYPSUM WALL BOARD, DRY COMPLETED TO A MAXIMUM MOISTURE CONTENT OF 15%.
15. SUBMITTALS - SHOP DRAWINGS, 4 COPIES.
16. PREFABRICATED WOOD TRUSSES:
   A. REFERENCE STANDARD - ANSI / TPI 1.
   B. PERFORMANCE REQUIREMENTS - PROVIDE WOOD TRUSSES DESIGNED AND FABRICATED TO SUPPORT THE LOADS SHOWN WITH A TOTAL LOAD DEFLECTION LESS THAN L/360.
   C. SUBMITTALS: (3 COPIES)
      STRUCTURAL CALCULATIONS STAMPED BY AN ENGINEER REGISTERED IN OREGON & SHOP DRAWINGS SHOWING ALL FABRICATION, ERECTION AND INSTALLATION DETAILS.
17. UNLESS NOTED OTHERWISE, ALL BEAMS & GIRDER TRUSSES TO BE SUPPORTED AT ENDS BY:
   A. MULTIPLE STUDS EQUAL TO BEAM WIDTH (TRIPLE STUD MIN) WHEN LOCATED IN WALL. CONTINUE ON ALL FLOORS DOWN TO FOUNDATION WITH SOLID BLOCKING AT FLOORS. CONN STUDS TOGETHER WITH 16D @ 12" O.C.
   B. SOLID POST EQUAL TO BEAM WIDTH WHEN FREE STANDING. EXTEND CONTINUOUS FOR FULL HEIGHT DOWN TO SOLID BEARING.

HOLDOWN SCHEDULE

MARK NUMBER	HOLDOWN	BOUNDARY STUDS	ANCHOR THCKN SLAB (6)	ANCHOR EXT. STEM WALL (6)
-	NO HOLDOWN REQ'D			
1.	HDU2	(2)2x	S6TB16	S6TB20
2.	HDU4	(2)2x	S6TB16	S6TB20
3.	HDU5	(2)2x	S6TB24	S6TB24
4.	HDU8	(3)2x	S6TB34	S6TB34
5.	HDU11	(1)6x	N/A	SBX30 @ HDU11
6.	HDU14	(1)6x	N/A	SBX30
7.	MSTC28	(2)2x	N/A	N/A
8.	MSTC40	(2)2x	N/A	N/A
9.	MSTC66	(2)2x	N/A	N/A
10.	2-MSTC66	(4)2x	N/A	N/A

NOTES:

1. INSTALL ALL HOLDOWNS PER MANUFACTURER SPECIFICATION PER C-C-2015 SIMPSON STRONG TIE CATALOG OR USP 34TH EDITION CATALOG.
2. MATCH STUDS ON SCHEDULE FOR WALLS BELOW ON ALL WALL TO WALL HOLDOWNS.
3. (2)2x OR (3)2x STUDS NAILED TOGETHER WITH (2) ROWS OF 16D @ 3" O.C. STAGGERED.
4. REFER TO SHEARWALL SCHEDULE AND TYPICAL SHEARWALL DETAILS FOR WALL LOCATIONS AND CONFIGURATIONS.
5. REFER TO SIMPSON OR USP CATALOGS FOR MINIMUM EMBED OF ANCHORS INTO CONCRETE.
6. USE S6TBL MODELS @ 3x SILL LOCATIONS.

SHEAR WALL SCHEDULE(1-13)

MARK	REF NOTES: (1,9) SHEATHING	Note: (2) NAIL SIZE	EDGE NAILS SPACING	FIELD NAILS SPACING	SILL TO CONCRETE CONNECTION, NOTE: (3)	SILL TO WOOD CONNECTION, Note (7)	SHEAR TRANSFER CLIPS (8)
A	7/16" OSB (1) SIDE (6)	8d	6"	12"	5/8" DIA. A.B. @ 48" O/C	16D @ 6" O/C	A35 OR RBC @ 24" O/C
B	7/16" OSB (1) SIDE (6)	8d	4"	12"	5/8" DIA. A.B. @ 36" O/C (12)	16D @ 4" O/C	A35 OR RBC @ 18" O/C
C	7/16" OSB (1) SIDE (5,6)	8d	3"	12"	5/8" DIA. A.B. @ 30" O/C (12)	16D @ 3" O/C	A35 OR RBC @ 12" O/C
D	7/16" OSB (1) SIDE (5,6)	8d	2"	12"	5/8" DIA. A.B. @ 24" O/C (12)	16D @ 2" O/C	A35 OR RBC @ 10" O/C
E	7/16" OSB (2) SIDES (4,5,6)	8d	4" STAGGERED	12"	5/8" DIA. A.B. @ 18" O/C (12)	16D @ 2" O/C	A35 OR RBC @ 7" O/C
F	7/16" OSB (2) SIDES (4,5,6)	8d	3" STAGGERED	12"	5/8" DIA. A.B. @ 15" O/C (12)	16D @ 3" O/C/2 ROWS STAGGERED	A35 OR RBC @ 5" O/C
G	7/16" OSB (2) SIDES (4,5,6)	8d	2" STAGGERED	12"	5/8" DIA. A.B. @ 12" O/C (12)	16D @ 2" O/C/2 ROWS STAGGERED	HGA10KT @ 7" O/C

NOTES:

1) C-D, D-C SHEATHING, PLYWOOD PANEL SIDING AND OTHER GRADES COVERED IN PS1-95. ALL WALL CONSTRUCTION TO CONFORM TO OSSC TABLE 2306.4.1.
2) USE COMMON WIRE NAILS FOR ALL WOOD SHEATHING AND COOLER NAILS FOR GYPBOARD SHEATHING.
3) A.B. MINIMUM 7" EMBED INTO CONCRETE. 3"X3"X¼" PLATE WASHERS REQ'D AT ALL SHEAR WALL A.B.'s. N/A @ MASA ANCHORS.
4) PANEL JOINTS SHALL BE OFFSET TO FALL ON DIFFERENT FRAMING MEMBERS OR FRAMING SHALL BE 3X OR THICKER AND NAILS ON EACH SIDE SHALL BE STAGGERED.
5) 3X OR DBL 2X FRAMING AT ALL ADJOINING PANEL EDGES AND NAILS SHALL BE STAGGERED.
6) ALL EDGES BLOCKED.
7) COMMON WIRE NAILS.
8) CLIP TO BE ATTACHED FROM CONTINUOUS BLOCKING TO TOP OF CONTINUOUS TOP PLATES. CLIPS ARE NOT REQUIRED AT GYP BD WALLS BUT BLOCKING IS ATTACHED PER THE TOENAILING SCHEDULE.
9) SEE ATTACHED TYPICAL SHEARWALL DETAILS.
10) SHEATHING TO BE STRUCTURAL I SHEATHING.
11) VALUES ARE FOR FRAMING OF H-F.
12) SEE PLAN FOR WALLS WHERE SEISMIC DESIGN SHEAR IS GREATER THAN 350 PLF (ASD). 3X OR DBL 2X AT PANEL EDGES AND SILL. STAGGER NAILS. NAIL AND GLUE DBL 2X SILL TOGETHER W/ 10D GALVANIZED @ 4" O/C STAGGERED, OR USE A 3X. FOR WALLS WITH THE LARGER SILLS, ANCHOR BOLT SPACING MAY BE INCREASED BY A FACTOR OF 1.25 FROM THE TABLE ABOVE DUE TO THICKER SILLS.
13) 7/16" PLY IS ACCEPTABLE IN LIEU OF 7/16" OSB

REGISTERED PROFESSIONAL ENGINEER
51319PE
OREGON
JAN. 12, 1995
DAVID J. HORN
Expires: 6-30-19

HCE
Horn Consulting Engineers LLC
7622 SW Beaverton-Hillsdale Hwy, Ste 202 Portland, OR 97225
Phone: 503.892.5782 Email: dave@hornhce.com

DISCLAIMER: THE SIGNATURE AND STAMP FOR THESE STRUCTURAL DRAWINGS ARE VALID ONLY WHEN ACCOMPANIED BY A DEVELOPMENT AND LOT SPECIFIC SET OF STRUCTURAL CALCULATIONS PREPARED BY HORN CONSULTING ENGINEERS LLC AND SEALED WITH A WET STAMP AND SIGNATURE BY THE ENGINEER WHOSE STAMP APPEARS ON THIS SHEET. CONSTRUCTION SHALL BE PERFORMED ONLY WITH A DRAWING SET APPROVED BY THE LOCAL JURISDICTION.

PARCEL 1
1791 BLANKENSHIP RD
WEST LINN, OR 97068

SHEAR WALL & HOLDOWN SCHEDULES / STRUCTURAL NOTES

REVISIONS:

DATE: 8.9.18
SCALE:
DRAWN: LY
JOB NO: 1A-18-01

FOR PERMIT 09/28/2018

S0

ORIGINAL SHEET SIZE: 22x34

LEGEND

- INDICATES WALL ABOVE FRAMING LEVEL
- INDICATES WALL BELOW FRAMING LEVEL
- INDICATES INTERIOR BEARING WALL BELOW FRAMING LEVEL
- ⊠ INDICATES COLUMN ABOVE
- ■ INDICATES COLUMN BELOW FRAMING LEVEL
- INDICATES DETAIL REFERENCE APPLIES TO ALL SIMILAR LOCATIONS
- HDUx (x) HOLDOWN TYPE 4 SCHEDULE MARK NUMBER (x) ON SHT S0

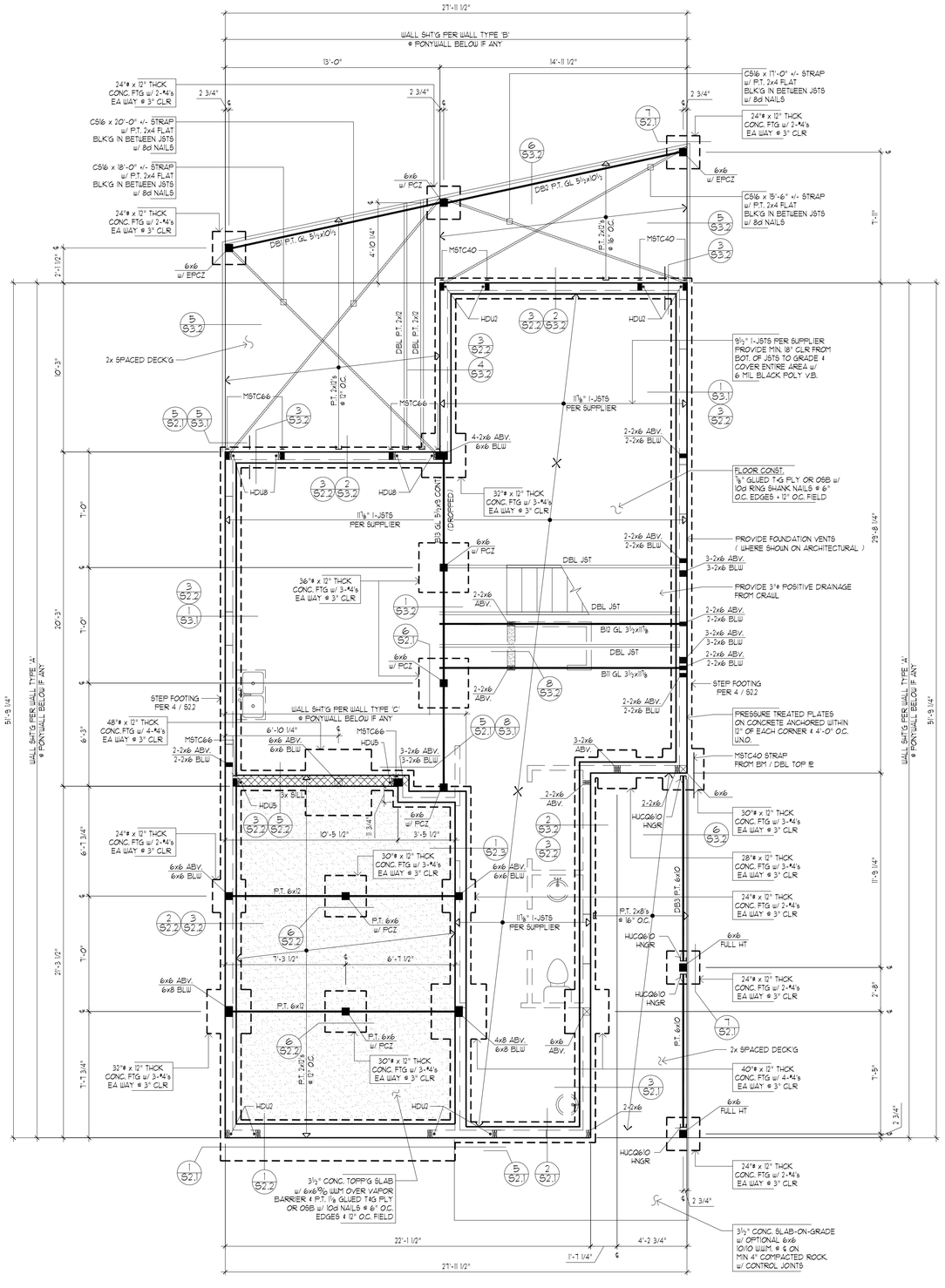

1 S1.1 FOUNDATION / MAIN FLOOR FRAMING PLAN

SCALE: 1/4"=1'-0"

FOR PERMIT 09/28/2018

REGISTERED PROFESSIONAL ENGINEER
51319PE
OREGON
JAN. 12, 1999
DAVID J. HORN
Expires: 6-30-19

HCE
Horn Consulting Engineers LLC
7624 SW Beaverton-Hillsdale Hwy, Ste 202 Portland, OR 97225
Phone: 503.892.5782 Email: dave@hornhcE.com

DISCLAIMER: THE SIGNATURE AND STAMP FOR THESE STRUCTURAL DRAWINGS ARE VALID ONLY WHEN ACCOMPANIED BY A DEVELOPMENT AND SITE SPECIFIC SET OF STRUCTURAL CALCULATIONS PREPARED BY HORN CONSULTING ENGINEERS LLC AND SEALED WITH A WET STAMP AND SIGNATURE BY THE ENGINEER WHOSE STAMP APPEARS ON THIS SHEET. CONSTRUCTION SHALL BE PERFORMED ONLY WITH A DRAWING SET APPROVED BY THE LOCAL JURISDICTION.

PARCEL 1
1791 BLANKENSHIP RD
WEST LINN, OR 97068

FOUNDATION / MAIN FLOOR FRAMING PLAN

REVISIONS:	
DATE:	8.9.18
SCALE:	¼" = 1'-0"
DRAWN:	LY
JOB NO:	1A-18-01

S1.1

ORIGINAL SHEET SIZE: 22x34

LEGEND

- INDICATES ROOF OVERFRAMING
- INDICATES WALL BELOW FRAMING LEVEL
- INDICATES INTERIOR BEARING WALL BELOW FRAMING LEVEL
- INDICATES COLUMN BELOW FRAMING LEVEL
- INDICATES DETAIL REFERENCE APPLIES TO ALL SIMILAR LOCATIONS
- INDICATES VAULTED AREA
- EXTENT OF SHEARWALL SHEATHING SEGMENT
- INDICATES SHEARWALL TYPE PER SCHEDULE SHT S0
- INDICATES HOLDDOWN TYPE. 1 @ EA END OF WALL SEGMENT PER SCHEDULE SHT S0

TRUSS NOTES:

- ALL TRUSSES TO BE PRE-ENGINEERED & CARRY MANUFACTURER'S STAMP.
- ALL TRUSSES SHALL BE INSTALLED & BRACED TO MANUFACTURER'S SPECIFICATIONS.
- NON-BEARING WALLS SHALL BE CONNECTED TO THE TRUSS BOTTOM CHORD w/ SIMPSON STC (OR EQ.) TO INSURE THAT THE TRUSS BOTTOM CHORD WILL NOT BEAR ON THE WALL.
- ALL CONNECTIONS WITH RAFTERS, MONO OR JACK TRUSSES & HIP TRUSSES TO MAIN GIRDER TO BE PROVIDED BY THE TRUSS MANUFACTURER.
- TRUSS LAYOUT SHOWING GIRDER TRUSS LOCATIONS ARE NOT PERMITTED TO CHANGE & MUST BE FOLLOWED CORRECTLY. IF TRUSS MANUFACTURER REQUESTS TO CHANGE IN PART OR IN WHOLE THE LAYOUT DESIGNED HEREIN, HE/SHE MUST CONTACT THE DESIGNER TO INSURE STRUCTURAL DESIGN IS MAINTAINED ON THE BUILDING CORRECTLY. ALSO, IF THE DESIGN LAYOUT IS DETERMINED TO CHANGE, THE BUILDING DEPARTMENT WILL REQUIRE APPROVAL & NEW ENGINEERING CALC'S.
- ADD SOLID BLK'G BETWEEN JOISTS UNDER POINT LOADS ABV. - WHERE APPLICABLE AT WALL.
- PROVIDE SOLID BEARING UNDER GIRDER TRUSS ENDS & FROM BEARING POINTS UNDER STRUCTURAL ROOF BEAMS AS SHOWN ON PLANS.
- PROVIDE SOLID BEARING UNDER BEAM ENDS & FROM BRG. POINTS TRANSFERRED DOWN FROM FLOOR ABV. CONT. TO FTG. BLW AS LOCATED ON PLANS.

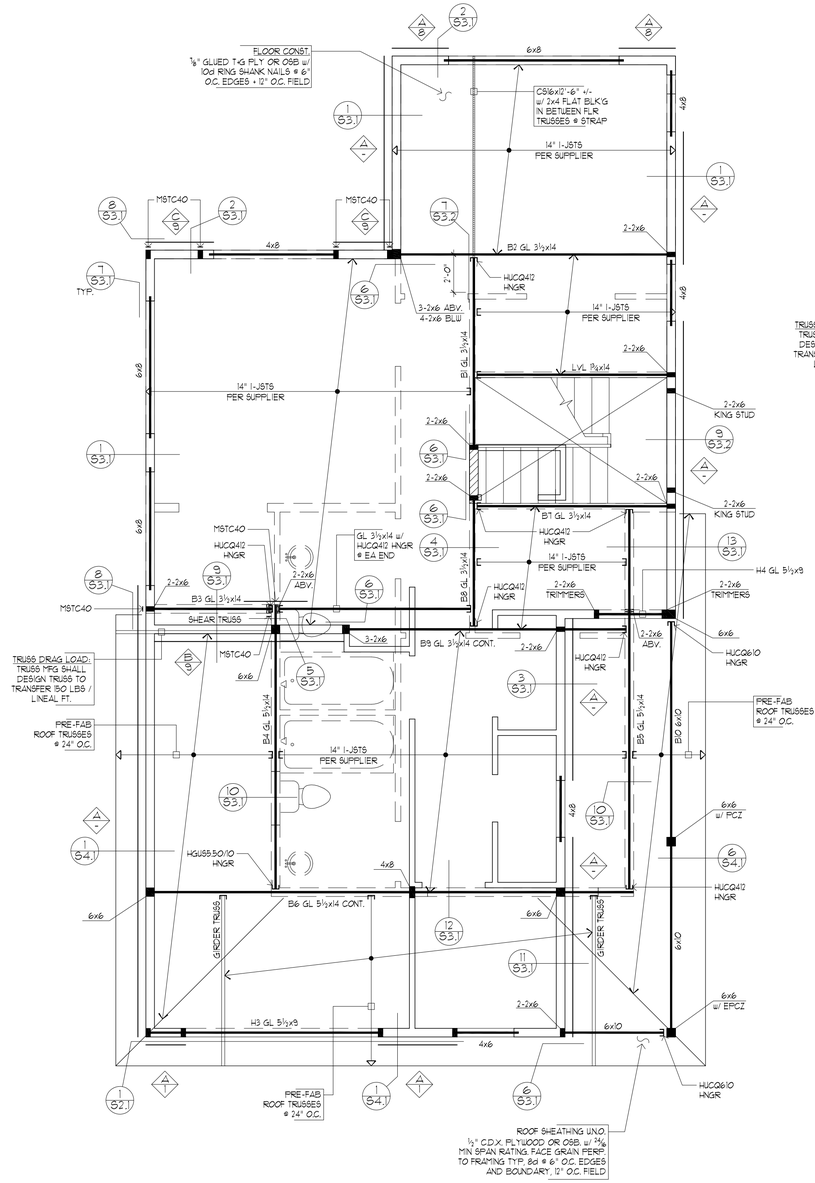

1 S1.2 UPPER FLOOR FRAMING / MAIN FLOOR SHEAR WALL PLAN

SCALE: 1/4"=1'-0"

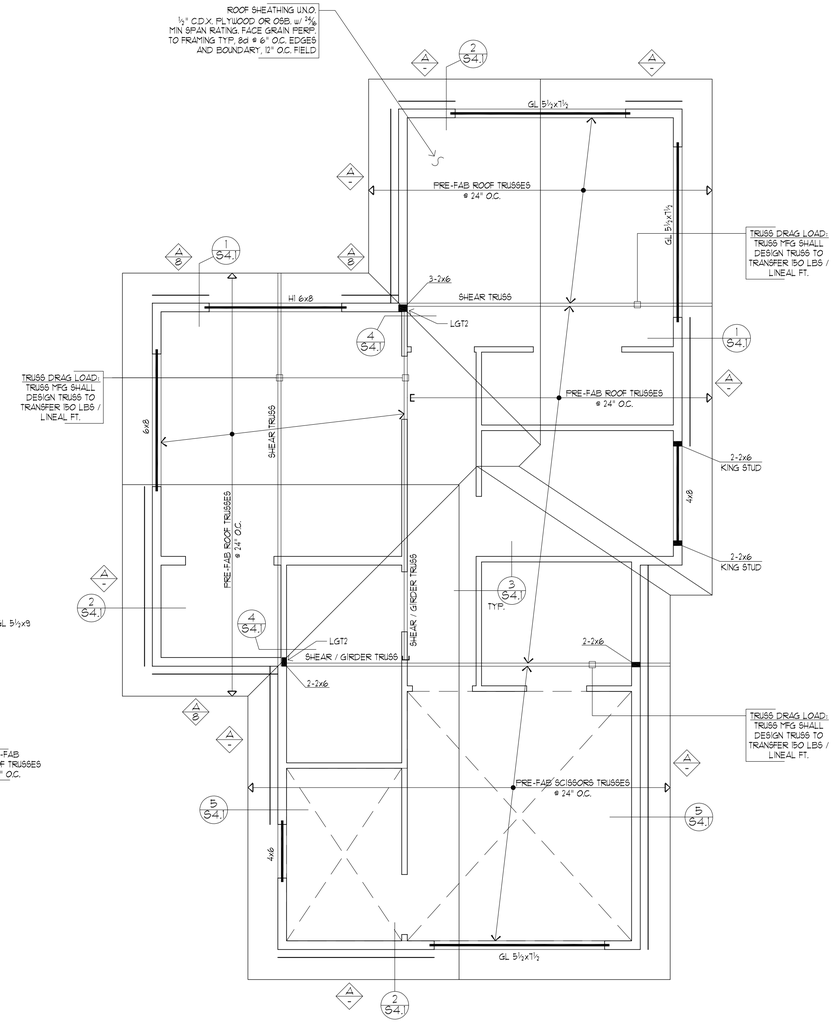

2 S1.2 ROOF FRAMING / UPPER FLOOR SHEAR WALL PLAN

SCALE: 1/4"=1'-0"

FOR PERMIT 09/28/2018

REGISTERED PROFESSIONAL ENGINEER
51319PE
OREGON
JAN. 12, 1995
DAVID J. HORN
Expires: 6-30-19

HCE
Horn Consulting Engineers LLC
7452 SW Beaverton-Hillsdale Hwy, Ste 202 Portland, OR 97225
Phone: 503.892.5782 Email: dave@hcenw.com

DISCLAIMER: THE SIGNATURE AND STAMP FOR THESE STRUCTURAL DRAWINGS ARE VALID ONLY WHEN ACCOMPANIED BY A DOCUMENTED AND DATED SPECIFIC SET OF STRUCTURAL CALCULATIONS PREPARED BY HORN CONSULTING ENGINEERS LLC AND SEALED WITH A WET STAMP AND SIGNATURE BY THE ENGINEER WHOSE STAMP APPEARS ON THIS SHEET. CONSTRUCTION SHALL BE PERFORMED ONLY WITH A DRAWING SET APPROVED BY THE LOCAL JURISDICTION.

PARCEL 1
1791 BLANKENSHIP RD
WEST LINN, OR 97068

UPPER FLOOR FRAMING / MAIN FLOOR SHEAR WALL / ROOF FRAMING / UPPER FLOOR SHEAR WALL PLANS

REVISIONS:

DATE:	8.9.18
SCALE:	¼" = 1'-0"
DRAWN:	LY
JOB NO:	1A-18-01

S1.2

ORIGINAL SHEET SIZE: 22x34

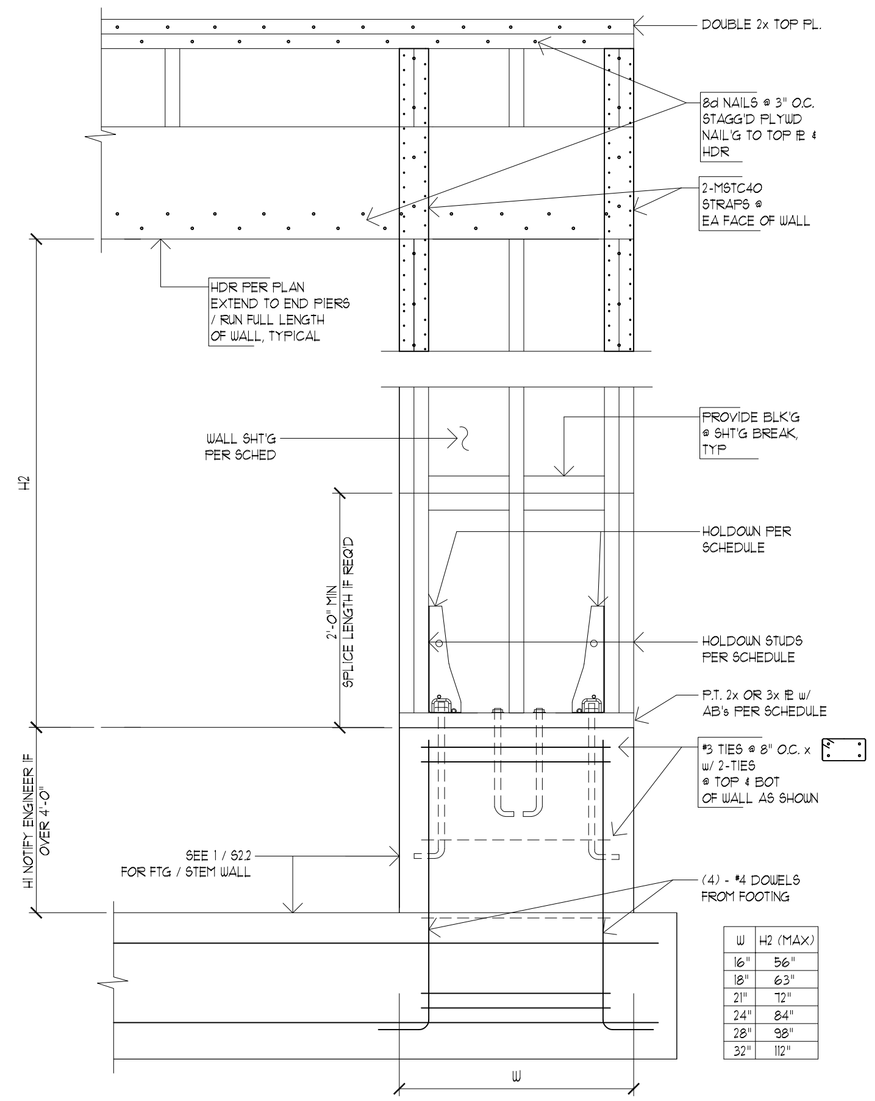

1 GARAGE WING FRAMING (LOW HEADER)

SCALE: 1"=1'-0"

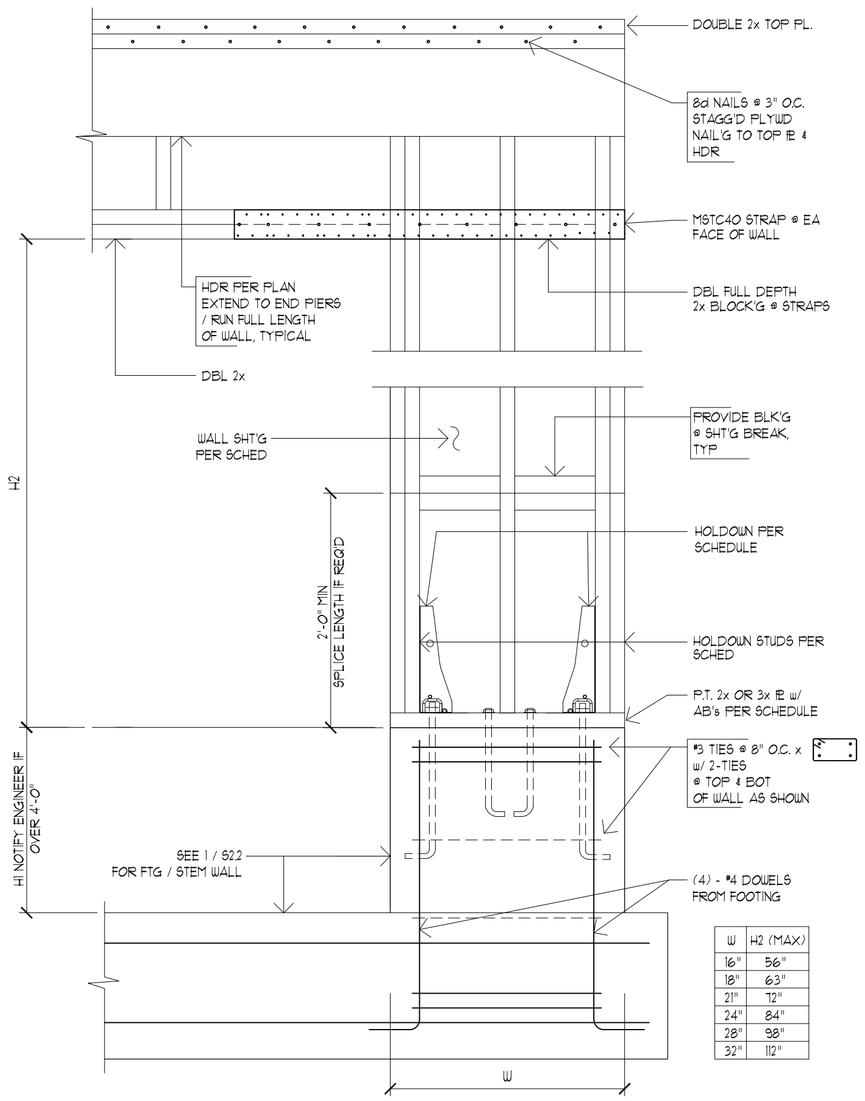

GARAGE WING FRAMING (RAISED HEADER)

SCALE: 1"=1'-0"

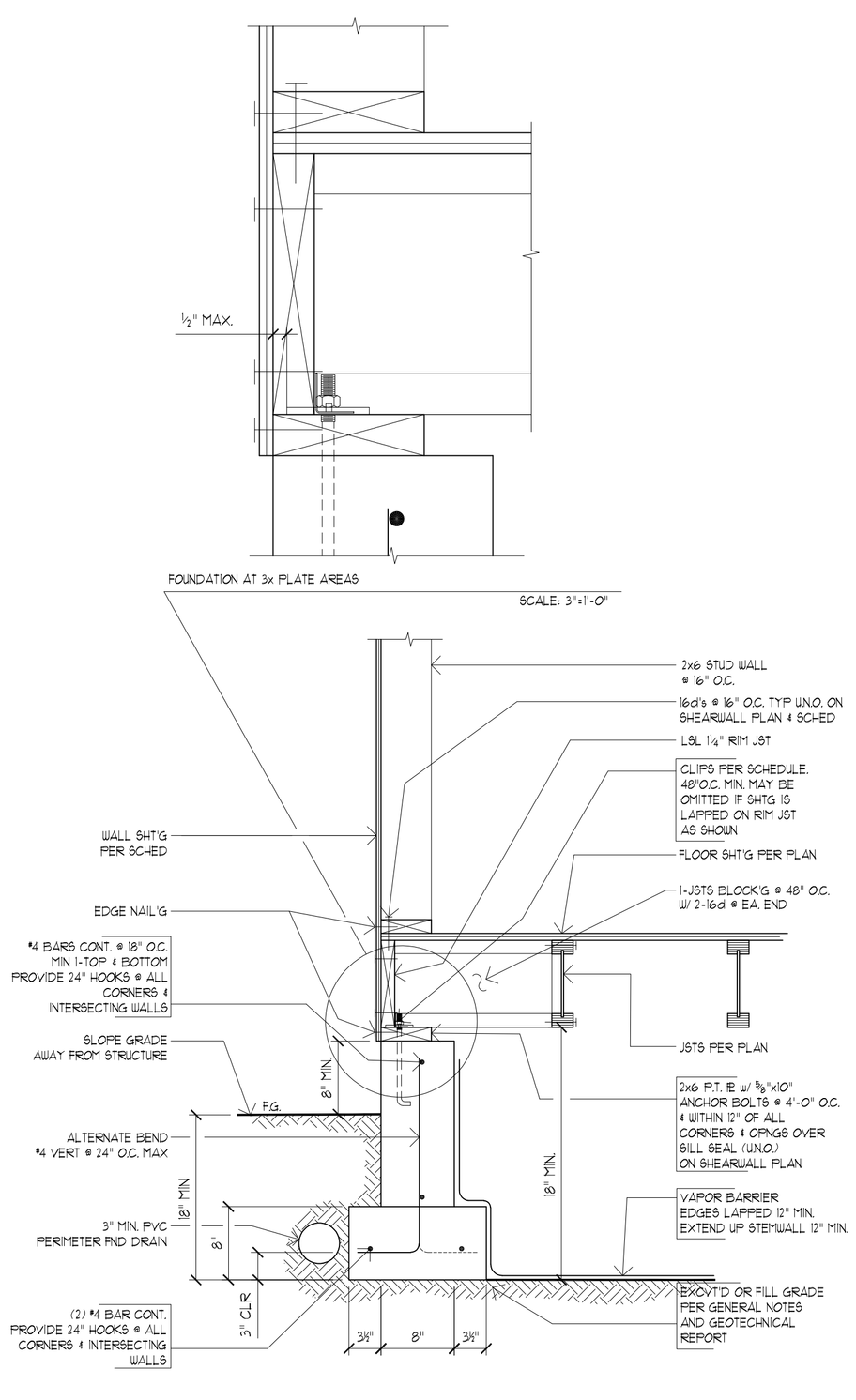

2 FOUNDATION @ 2 STORY STRUCTURE W/ PARALLEL JSTS

NOTE: ENGINEERED CONC. WALL REQ. IF BACKFILL AGAINST WALL EXCEEDS 48" IN HEIGHT

SCALE: 1"=1'-0"

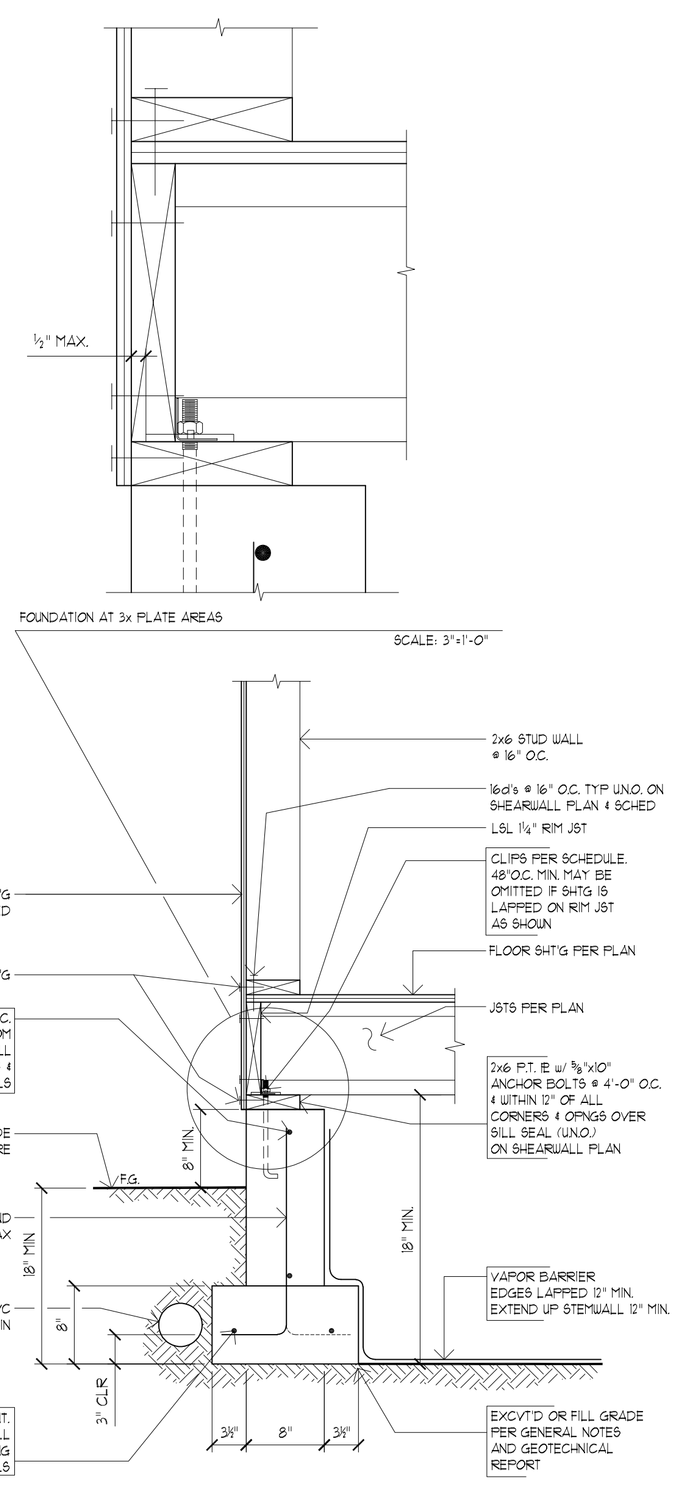

3 FOUNDATION @ 2 STORY STRUCTURE W/ PERP JSTS

NOTE: ENGINEERED CONC. WALL REQ. IF BACKFILL AGAINST WALL EXCEEDS 48" IN HEIGHT

SCALE: 1"=1'-0"

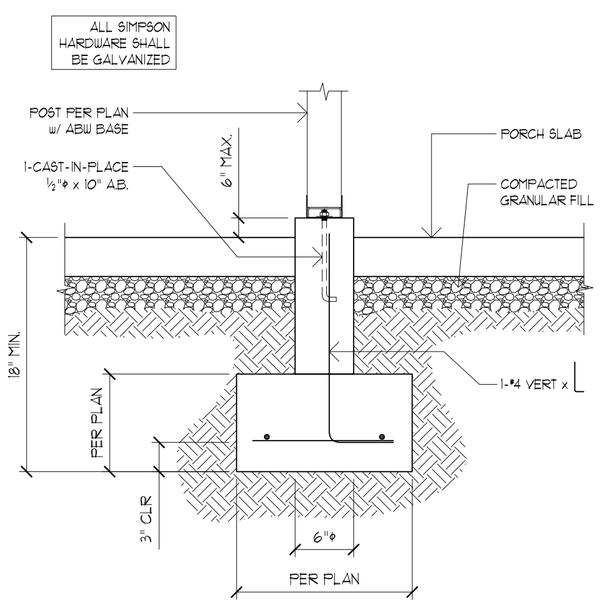

4 FRONT PORCH POST / FTG

SCALE: 1"=1'-0"

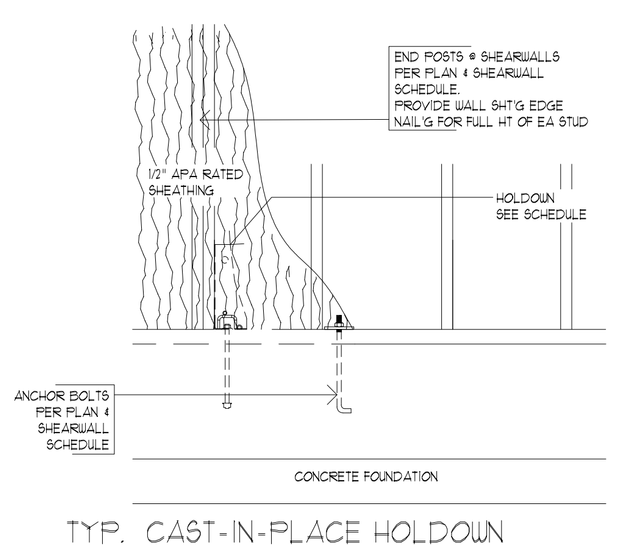

TYP. CAST-IN-PLACE HOLDOWN @ STEM WALL

SCALE: 1"=1'-0"

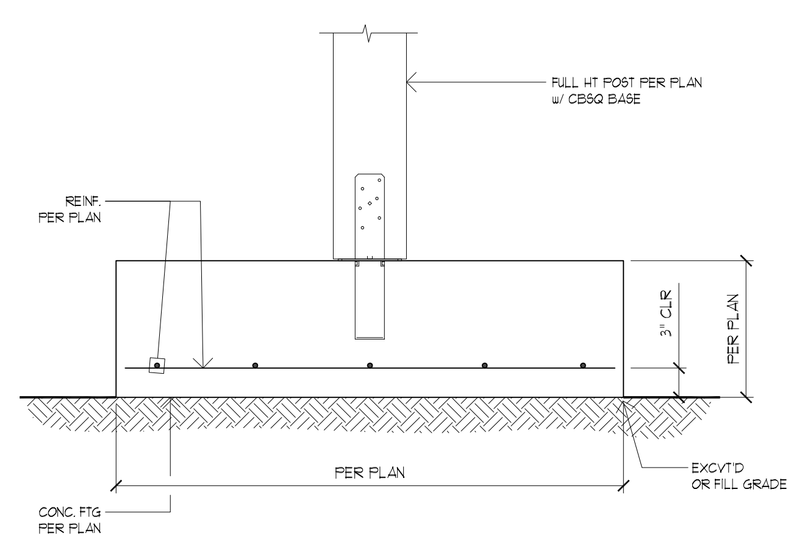

6 POST CONNECTION @ FOOTING

SCALE: 1"=1'-0"

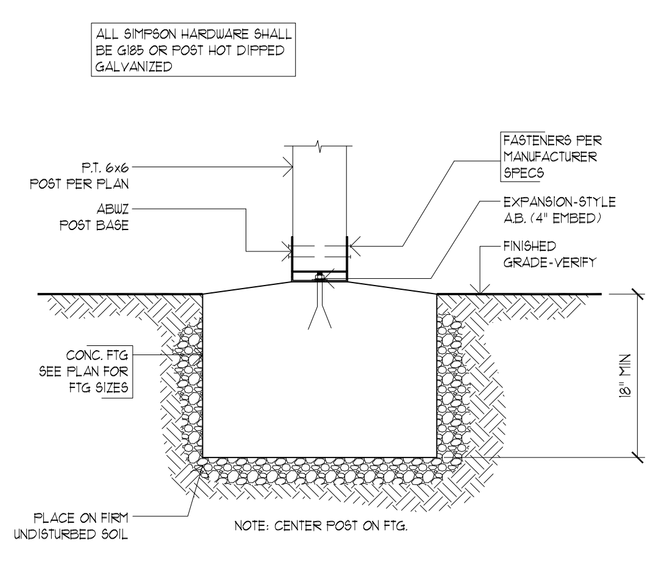

7 FOOTING DETAIL

SCALE: N.T.S.

FOR PERMIT 09/28/2018

REGISTERED PROFESSIONAL ENGINEER
51319PE
OREGON
JAN. 12, 1995
DAVID J. HORN
Expires: 6-30-19

HCE
Horn Consulting Engineers LLC
7452 SW Beaverton-Hillsdale Hwy, Ste 202 Portland, OR 97225
Phone: 503 893 5782 Email: dave@hornllc.com

DISCLAIMER: THE SIGNATURE AND STAMP FOR THESE STRUCTURAL DRAWINGS ARE VALID ONLY WHEN ACCOMPANIED BY A DEVELOPMENT AND SITE SPECIFIC SET OF STRUCTURAL CALCULATIONS PREPARED BY HORN CONSULTING ENGINEERS LLC AND SEALED WITH A WET STAMP AND SIGNATURE BY THE ENGINEER WHOSE STAMP APPEARS ON THIS SHEET. CONSTRUCTION SHALL BE PERFORMED ONLY WITH A DRAWING SET APPROVED BY THE LOCAL JURISDICTION.

PARCEL 1
1791 BLANKENSHIP RD
WEST LINN, OR 97068

DETAILS

REVISIONS:

DATE:	8.9.18
SCALE:	1" = 1'-0"
DRAWN:	LY
JOB NO:	1A-18-01

S2.1

ORIGINAL SHEET SIZE: 22x34

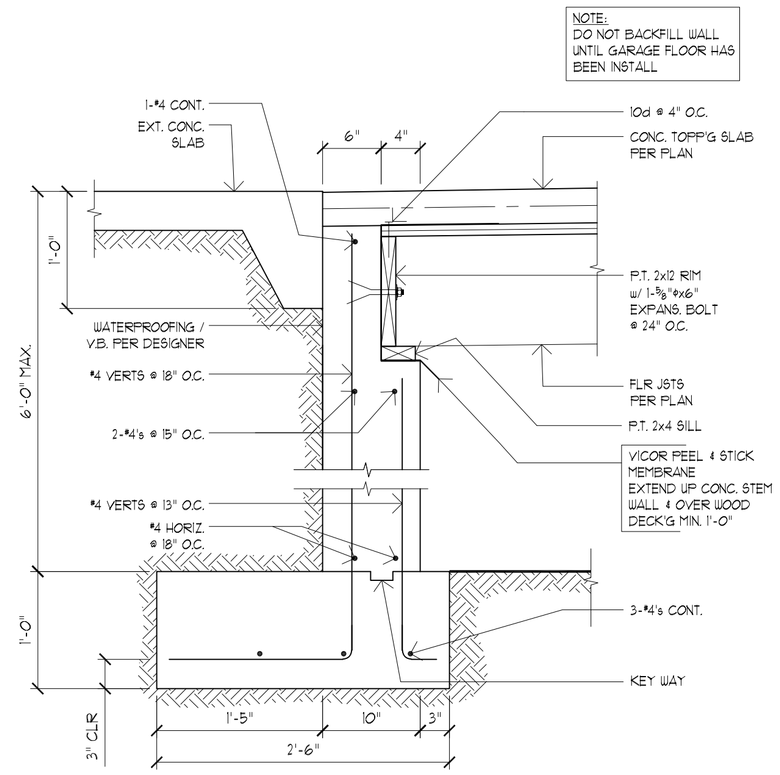

1 SUSPENDED GARAGE JSTS / RETAIN. WALL

SCALE: 1"=1'-0"

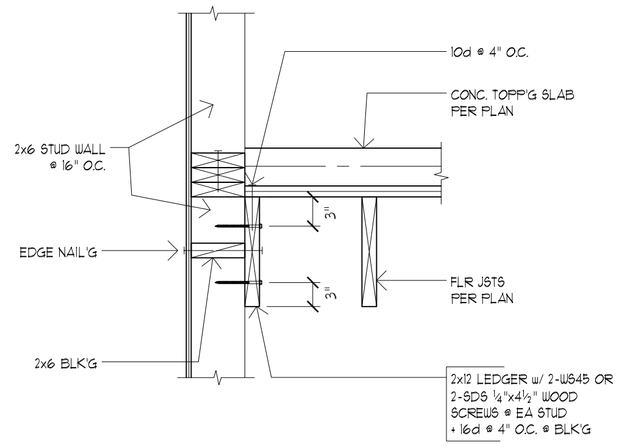

2 PARALLEL 2x12 FLR JSTS / WALL

SCALE: 1"=1'-0"

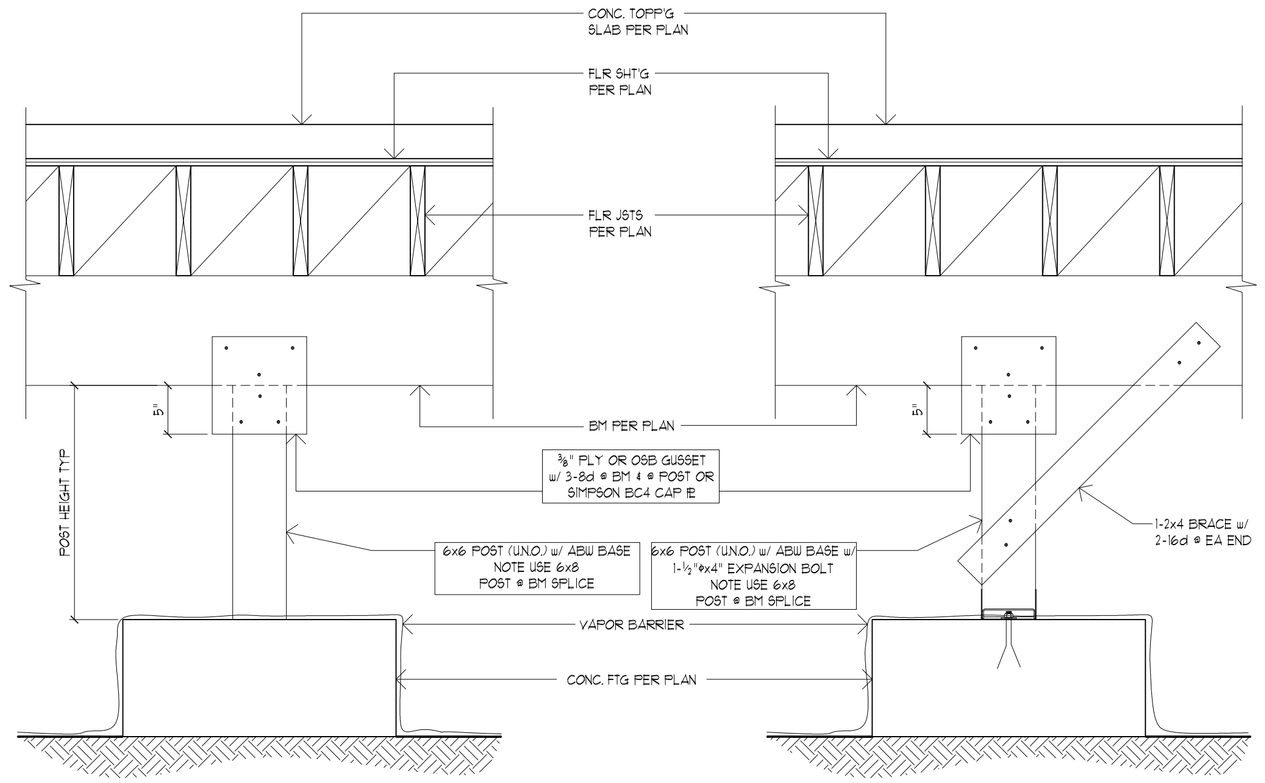

POST 4'-0" OR LESS

POST > 4'-0" < 8'-0"

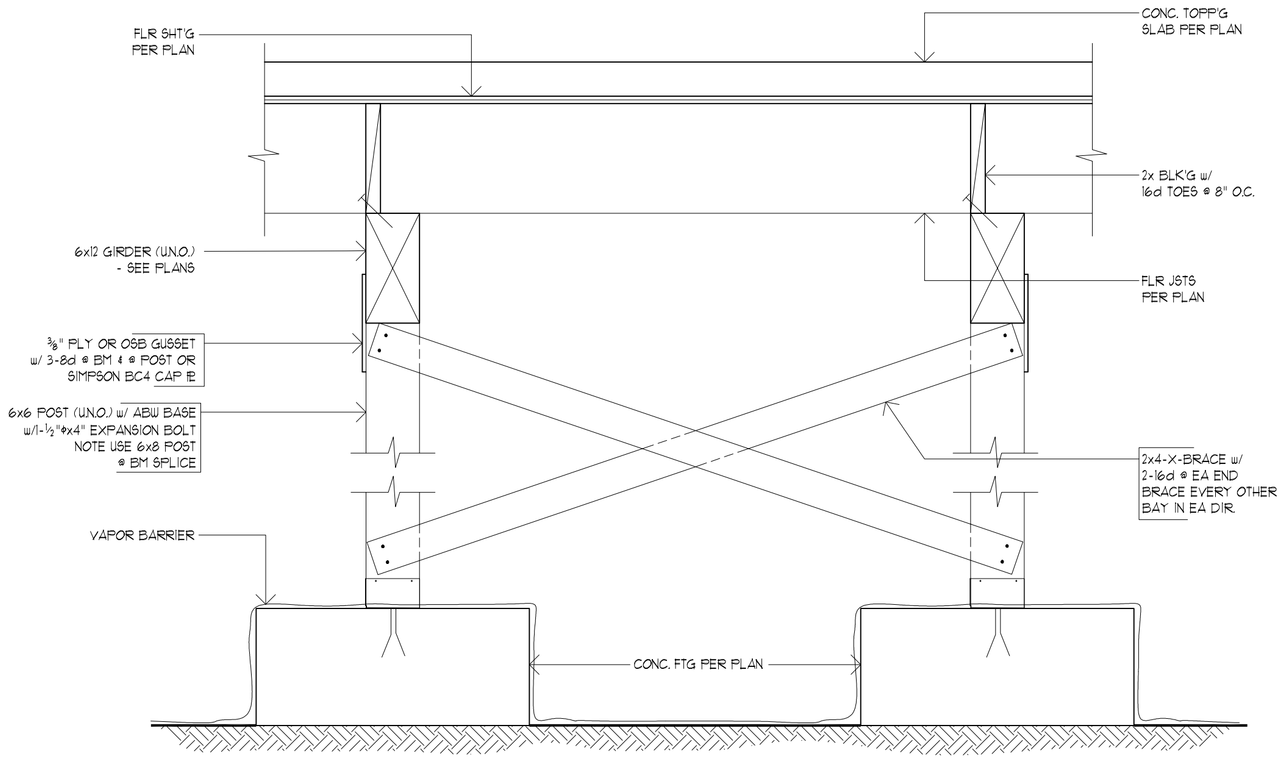

POST > 8'-0" < 14'-0"

6 CRAWL SPACE POST TO BEAM POSITIVE CONNECTION

SCALE: 1"=1'-0"

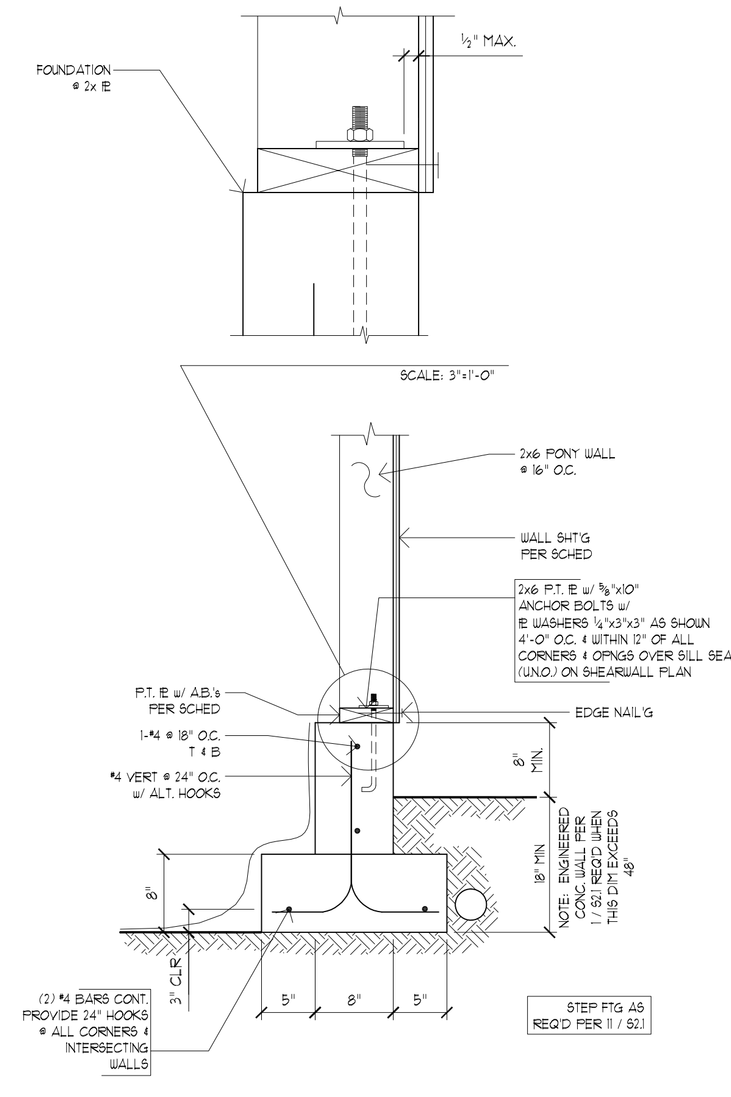

3 FOUNDATION / PONY WALL

SCALE: 1"=1'-0"

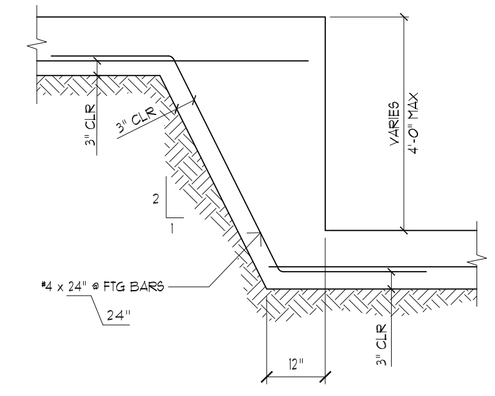

4 TYP FOOTING STEP

SCALE: 1" = 1'-0"

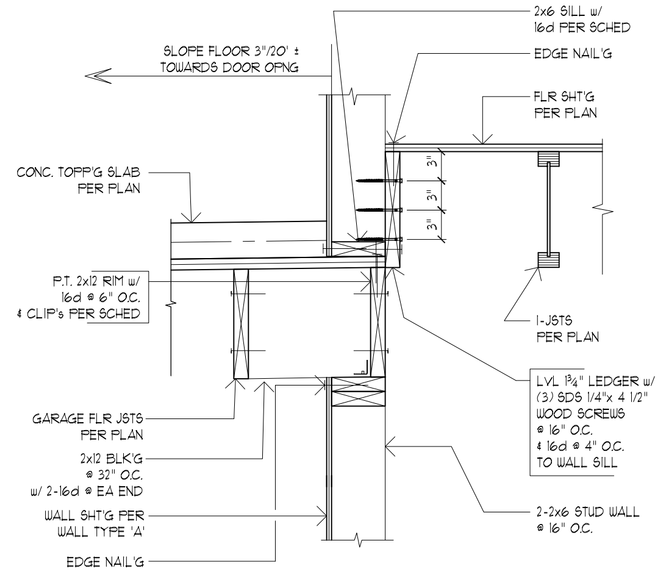

5 GARAGE JSTS / CRIPPLE WALL

SCALE: 1"=1'-0"

REGISTERED PROFESSIONAL ENGINEER
51319PE
OREGON
JAN. 12, 1999
DAVID J. HORN
Expires: 6-30-19

HCE
Horn Consulting Engineers LLC
7632 SW Beaverton-Hillsdale Hwy, Ste 202 Portland, OR 97225
Phone: 503.892.5782 Email: dave@hornhce.com

DISCLAIMER: THE SIGNATURE AND STAMP FOR THESE STRUCTURAL DRAWINGS ARE VALID ONLY WHEN ACCOMPANIED BY A DEVELOPMENT AND SITE SPECIFIC SET OF STRUCTURAL CALCULATIONS PREPARED BY HORN CONSULTING ENGINEERS LLC AND SEALED WITH A WET STAMP AND SIGNATURE BY THE ENGINEER WHOSE STAMP APPEARS ON THIS SHEET. CONSTRUCTION SHALL BE PERFORMED ONLY WITH A DRAWING SET APPROVED BY THE LOCAL JURISDICTION.

PARCEL 1
1791 BLANKENSHIP RD
WEST LINN, OR 97068

DETAILS

REVISIONS:	
DATE:	8.9.18
SCALE:	1" = 1'-0"
DRAWN:	LY
JOB NO:	1A-18-01

S2.2

FOR PERMIT 09/28/2018

ORIGINAL SHEET SIZE: 22x34

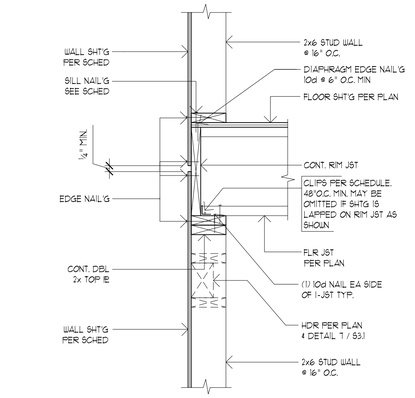

1 PERP. TJI FLR JSTS TO STUD WALL

SCALE: 1"=1'-0"

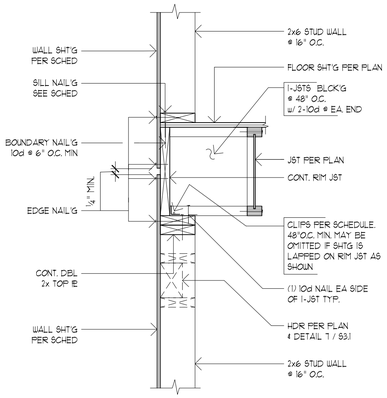

2 PARALLEL TJI FLR JSTS TO STUD WALL

SCALE: 1"=1'-0"

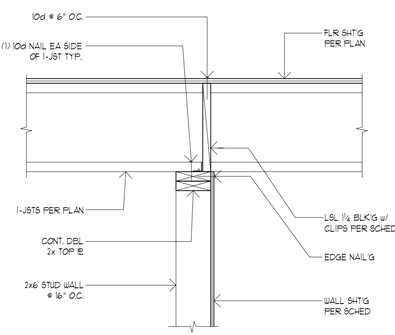

3 TYP. FLOOR TO SHEAR WALL CONN.

SCALE: 1"=1'-0"

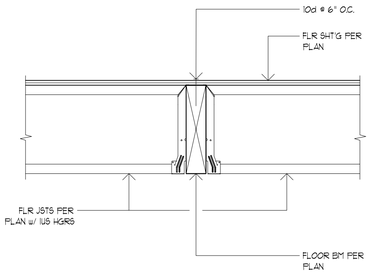

4 TYP. FLR JSTS TO FLUSH BM

SCALE: 1"=1'-0"

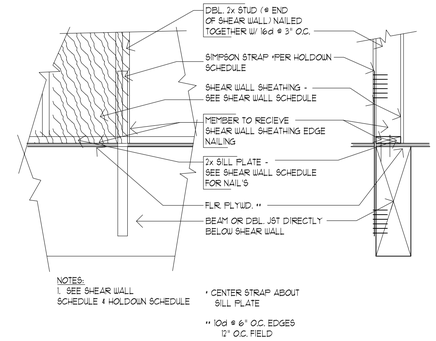

5 TIE STRAP @ BEAM

SCALE: 1"=1'-0"

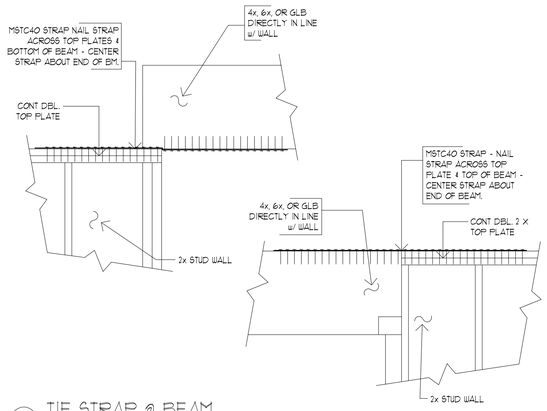

6 TIE STRAP @ BEAM

SCALE: 1"=1'-0"

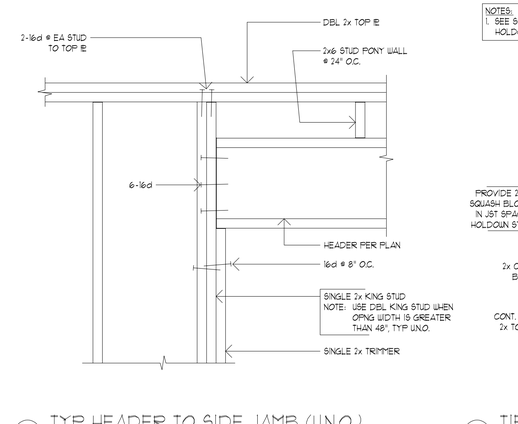

7 TYP HEADER TO SIDE JAMB (U.N.O.)

SCALE: 1"=1'-0"

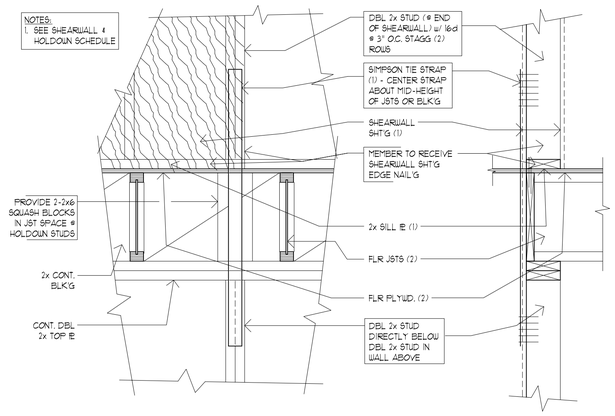

8 TIE STRAP HOLDOWN

SCALE: 1"=1'-0"

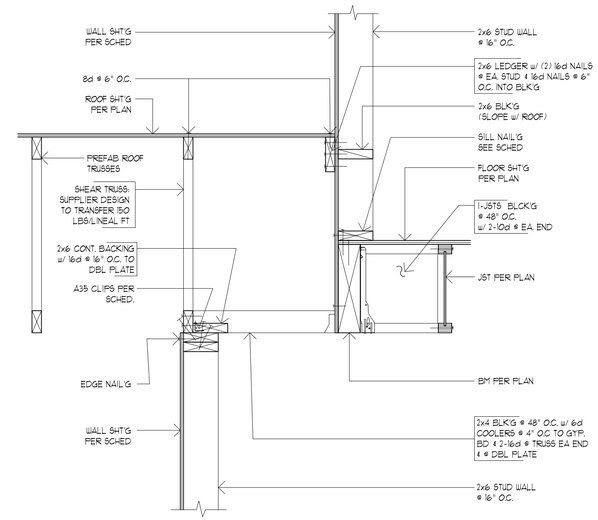

9 PARALLEL ROOF TRUSS @ SHEARWALL

SCALE: 1"=1'-0"

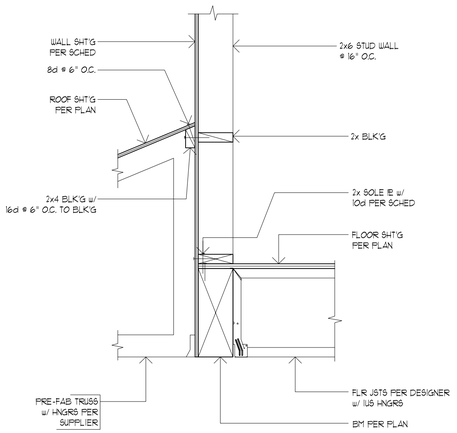

10 SHEARWALL @ BM / JST / TRUSSES

SCALE: 1"=1'-0"

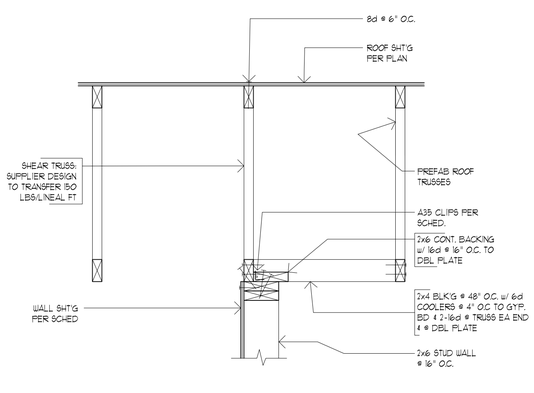

11 PARALLEL ROOF TRUSS @ SHEARWALL

SCALE: 1"=1'-0"

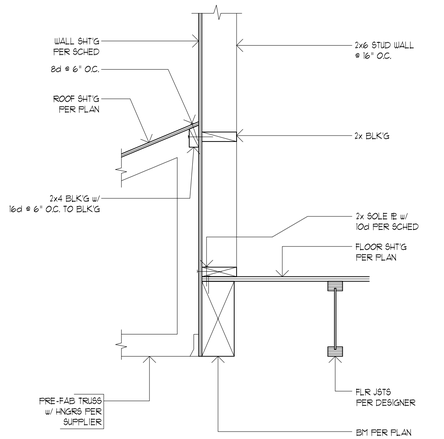

12 SHEARWALL @ BM / JST / TRUSSES

SCALE: 1"=1'-0"

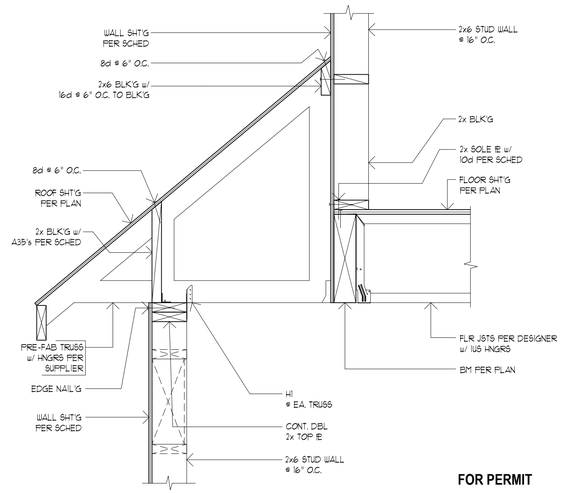

13 SHEARWALL @ BM / JST / TRUSSES

SCALE: 1"=1'-0"

FOR PERMIT 09/28/2018

REGISTERED PROFESSIONAL ENGINEER
51319PE
OREGON
JAN. 12, 1995
DAVID J. HORN
Expires: 6-30-19

HCE
Horn Consulting Engineers LLC
7624 SW Beaverton-Hillsdale Hwy, Ste 200 Portland, OR 97225
Phone: 503.892.5751 Email: dave@hornllc.com

DISCLAIMER: THE SIGNATURE AND STAMP FOR THESE STRUCTURAL DRAWINGS ARE VALID ONLY WHEN ACCOMPANIED BY A DEVELOPMENT AND SITE SPECIFIC SET OF STRUCTURAL CALCULATIONS PREPARED BY HORN CONSULTING ENGINEERS LLC AND SEALED WITH A WET STAMP AND SIGNATURE BY THE ENGINEER WHOSE STAMP APPEARS ON THIS SHEET. CONSTRUCTION SHALL BE PERFORMED ONLY WITH A DRAWING SET APPROVED BY THE LOCAL JURISDICTION.

PARCEL 1
1791 BLANKENSHIP RD
WEST LINN, OR 97068

DETAILS

REVISIONS:	
DATE:	8.9.18
SCALE:	1" = 1'-0"
DRAWN:	LY
JOB NO:	1A-18-01

S3.1

ORIGINAL SHEET SIZE: 22x34

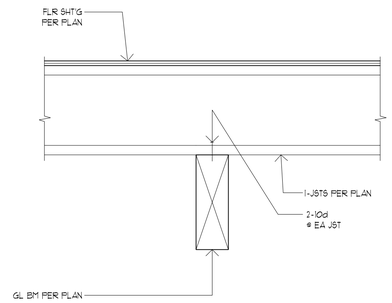

1 TYP. FLOOR TO BM

SCALE: 1"=1'-0"

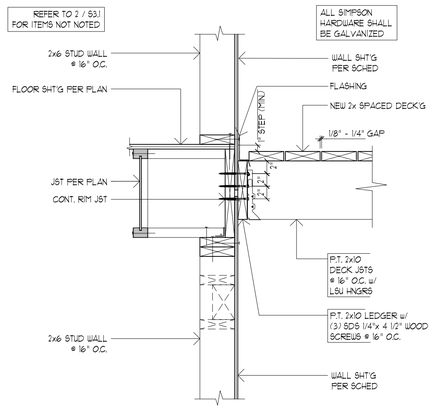

2 DECK LEDGER @ WALL

SCALE: 1"=1'-0"

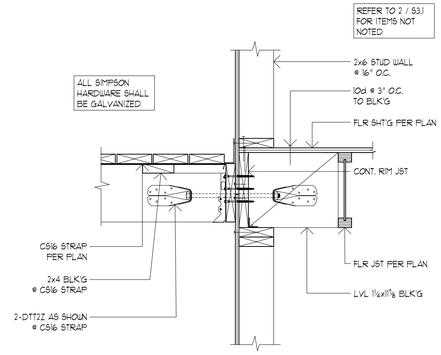

3 HORIZ. TIE / EXIST. FLOOR

SCALE: 1"=1'-0"

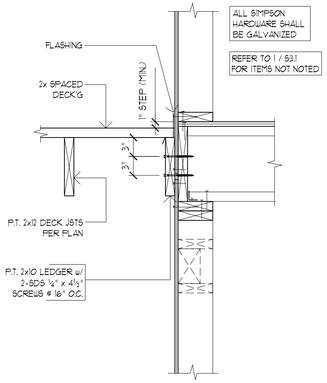

4 DECK LEDGER @ WALL

SCALE: 1"=1'-0"

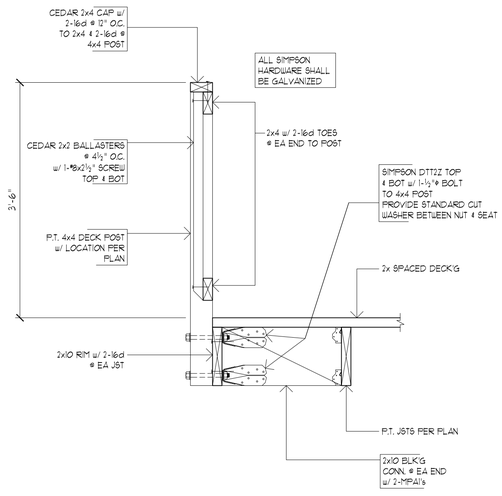

5 DECK POST @ JSTS / DECK'G

SCALE: 1"=1'-0"

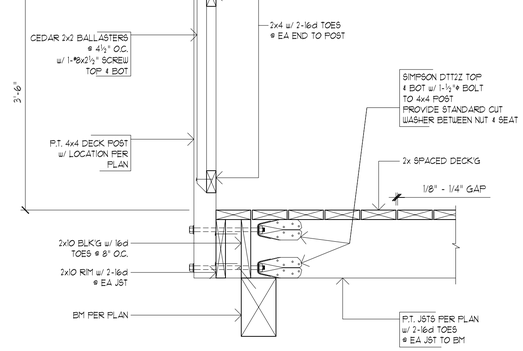

6 DECK POST @ JSTS / DECK'G

SCALE: 1"=1'-0"

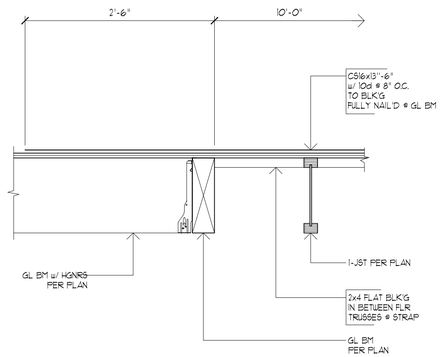

7 CS16 STRAP @ FLOOR / GL BM

SCALE: 1"=1'-0"

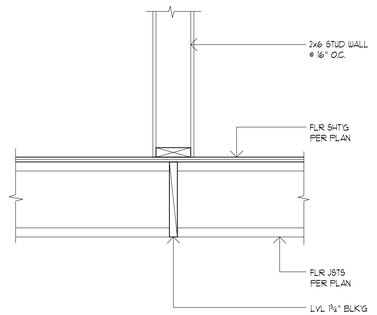

8 BEARING WALL @ JST

SCALE: 1"=1'-0"

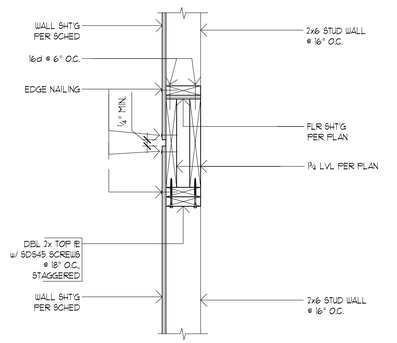

9 STUD WALLS @ STAIR OPENING

SCALE: 1"=1'-0"

FOR PERMIT 09/28/2018

REGISTERED PROFESSIONAL ENGINEER
51319PE
OREGON
JAN. 12, 1995
DAVID J. HORN
Expires: 6-30-19

HCE
Horn Consulting Engineers LLC
7624 SW Beaverton-Hillsdale Hwy, Ste 200, Portland, OR 97225
Phone: 503.892.5782 Email: dave@hornhce.com

DISCLAIMER: THE SIGNATURE AND STAMP FOR THESE STRUCTURAL DRAWINGS ARE VALID ONLY WHEN ACCOMPANIED BY A DEVELOPMENT AND LOT SPECIFIC SET OF STRUCTURAL CALCULATIONS PREPARED BY HORN CONSULTING ENGINEERS LLC AND SEALED WITH A WET STAMP AND SIGNATURE BY THE ENGINEER WHOSE STAMP APPEARS ON THIS SHEET. CONSTRUCTION SHALL BE PERFORMED ONLY WITH A DRAWING SET APPROVED BY THE LOCAL JURISDICTION.

PARCEL 1
1791 BLANKENSHIP RD
WEST LINN, OR 97068

DETAILS

REVISIONS:

DATE:	8.9.18
SCALE:	1" = 1'-0"
DRAWN:	LY
JOB NO:	1A-18-01

S3.2

ORIGINAL SHEET SIZE: 22x34

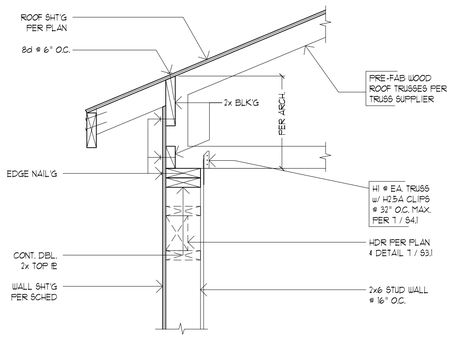

1 PERP. TRUSSES / EXT. WALL

SCALE: 1"=1'-0"

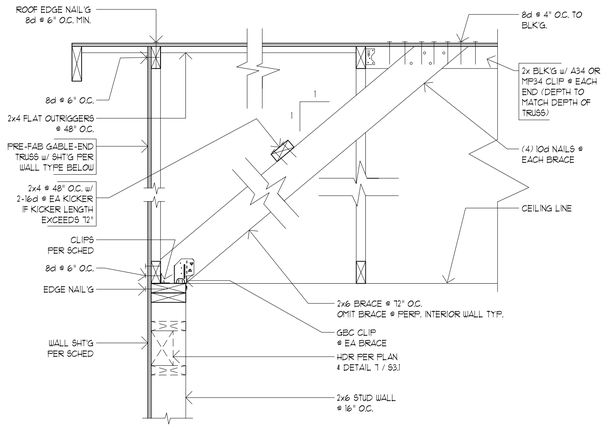

2 PARALLEL TRUSSES TO WALL

SCALE: 1"=1'-0"

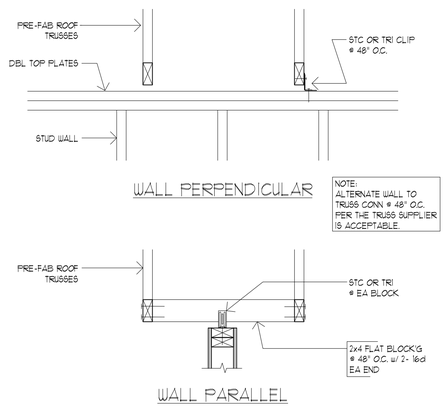

3 TYP. NON-STRUCT. STUD WALL ROOF TRUSS CONN.

SCALE: 1"=1'-0"

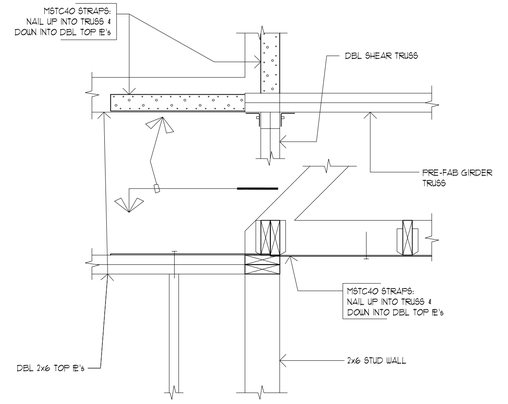

4 GIRDER @ WALL CORNER / SHEAR TRUSS DRAG STRUT CONN.

SCALE: 1"=1'-0"

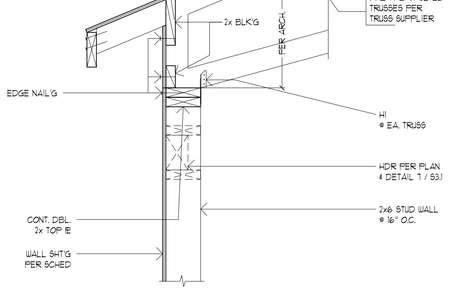

5 TRUSS PERP W/ VAULT

SCALE: 1"=1'-0"

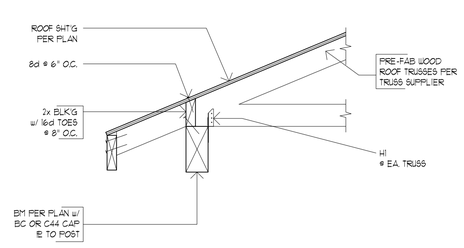

6 TRUSS @ BEAM

SCALE: 1"=1'-0"

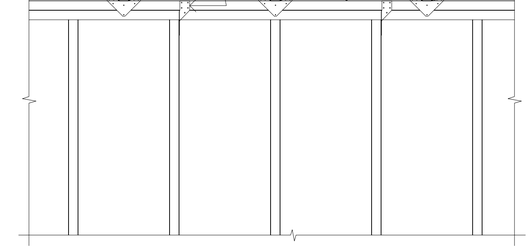

7 TRUSS TO STUD WALL CONNECTION

SCALE: 1"=1'-0"

FOR PERMIT 09/28/2018

REGISTERED PROFESSIONAL ENGINEER
51319PE
OREGON
JAN. 12, 1995
DAVID J. HORN
Expires: 6-30-19

HCE
Horn Consulting Engineers LLC
7452 SW Beaverton-Hillsdale Hwy, Ste 202 Portland, OR 97225
Phone: 503.892.5782 Email: dave@hornce.com

DISCLAIMER: THE SIGNATURE AND STAMP FOR THESE STRUCTURAL DRAWINGS ARE VALID ONLY WHEN ACCOMPANIED BY A DEVELOPMENT AND SITE SPECIFIC SET OF STRUCTURAL CALCULATIONS PREPARED BY HORN CONSULTING ENGINEERS LLC AND SEALED WITH A WET STAMP AND SIGNATURE BY THE ENGINEER UNDER STAMP APPEARS ON THIS SHEET. CONSTRUCTION SHALL BE PERFORMED ONLY WITH A DRAWING SET APPROVED BY THE LOCAL JURISDICTION.

PARCEL 1
11791 BLANKENSHIP RD
WEST LINN, OR 97068

DETAILS

REVISIONS:

DATE:	8.9.18
SCALE:	1" = 1'-0"
DRAWN:	LY
JOB NO:	1A-18-01

S4.1

ORIGINAL SHEET SIZE: 22x34

SINGLE FAMILY RESIDENCE - PARCEL 2

1791 BLANKENSHIP ROAD, WEST LINN, OREGON 97068

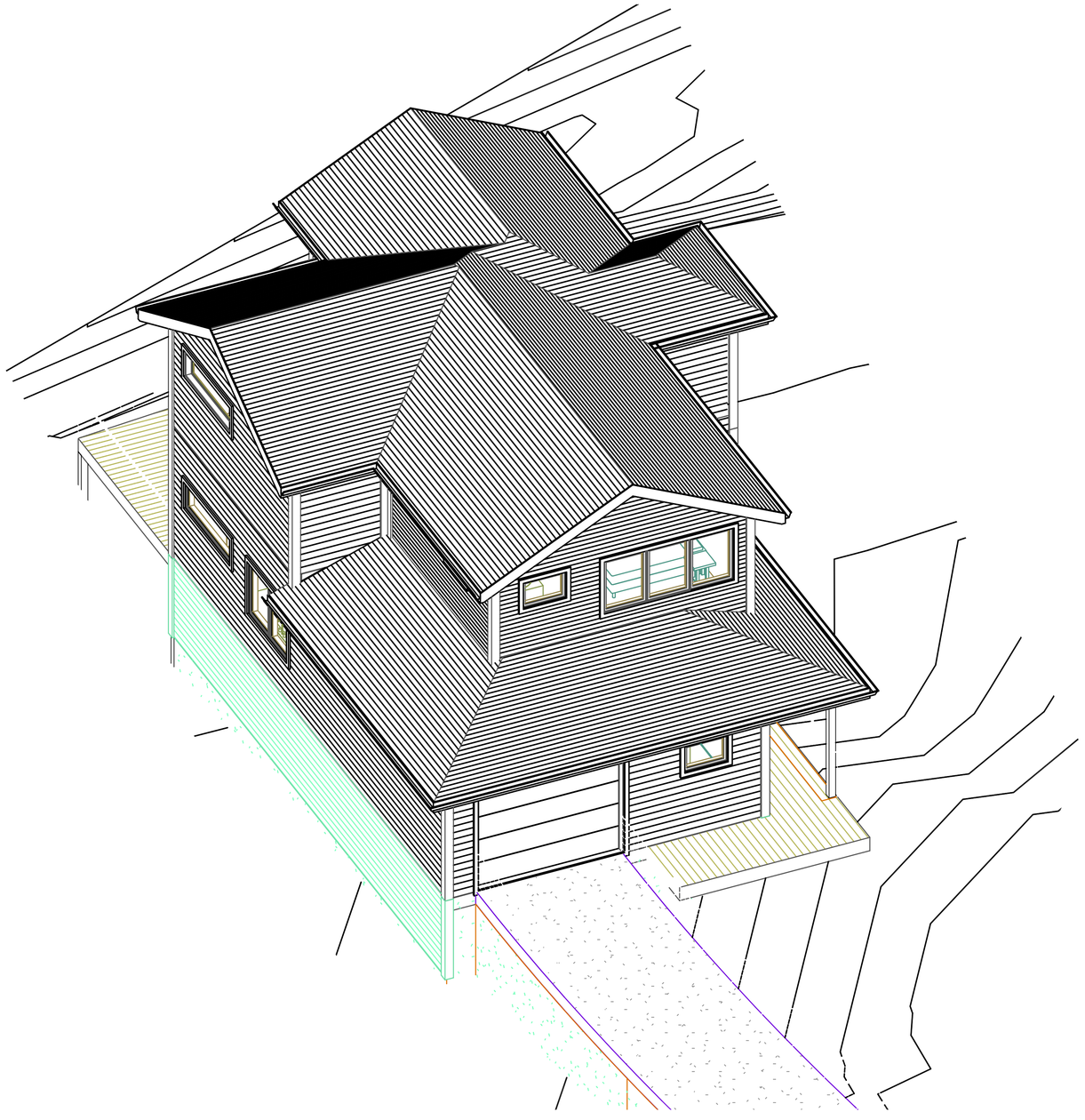

PROJECT TEAM

OWNER: JEREMY BARNETT
10220 SW VIEW TERRACE
TIGARD, OR 97224
PHONE: 503-705-8487
EMAIL: localbarnett@gmail.com

ARCHITECT: INTEGRATE ARCHITECTURE
& PLANNING, P.C.
1715 N. TERRY ST.
PORTLAND, OR 97217
CONTACT: PHIL SYDNOR
PHONE: 716-238-3263
EMAIL: PHIL@INTEGRATEARCH.COM

STRUCTURAL: DAVE HORN
HORN CONSULTING ENGINEERS LLC
9320 SW Barbur Blvd, Ste. 135
Portland, OR 97219
T: 503-892-5782 |C: 503-807-9059|
dave@hornce.com|www.hornce.com

CONTRACTOR:

PROJECT DESCRIPTION

NEW SINGLE-FAMILY DETACHED RESIDENCE.

SITE WAS FORMERLY A SINGLE PARCEL WHICH WAS RECENTLY SUB-DIVIDED INTO THREE (3) INDIVIDUAL PARCELS.
SEE A0.2 FOR PLOT PARTION MAP.

THIS SUBMISSION IS FOR DEVELOPMENT OF PARCEL 2.

SHEET INDEX

A0.0 COVER
A0.1 SURVEY
A0.2 PLOT PARTITION MAP
A1.1 SITE PLAN
A1.1a RIGHT-OF-WAY DETAILS
A1.2 UTILITY PLAN
A1.3 FOUNDATION PLAN
A1.4 SITE ELEVATIONS
A2.0 BUILDING PLANS
A3.0 BUILDING ELEVATIONS
A4.0 BUILDING SECTIONS
A5.0 SCHEDULES
A6.0 REFLECTED CEILING PLANS
A7.0 INTERIOR ELEVATIONS
S0 SHEARWALL AND HOLDDOWN SCHEDULES / STRUCT. NOTES / MAIN FLOOR FRAMING PLAN
S1.1 FOUNDATION / MAIN FLOOR FRAMING PLANS
S1.2 1ST & 2ND FLOOR SHEARWALL / FRAMING PLANS
S2.1 DETAILS
S2.2 DETAILS
S3.1 DETAILS
S3.2 DETAILS
S4.1 DETAILS

PROPERTY INFO.

TAX LOT NO: 21E35CB02600
SITE AREA: 15,315 SF
NEIGHBORHOOD: WILLAMETTE
COMP. PLAN: MU - MIXED USE
ZONING: MU - MIXED USE TRANSITION

APPLICABLE CODES:

CDC CHAPTER 105: AMENDMENTS TO THE MAP AND CODE
CDC CHAPTER 16: R-2.1 ZONING
CDC CHAPTER 48: ACCESS, EGRESS, AND CIRCULATION
CDC CHAPTER 85: LAND DIVISION
CDC CHAPTER 92: REQUIRED IMPROVEMENTS

SITE MAP

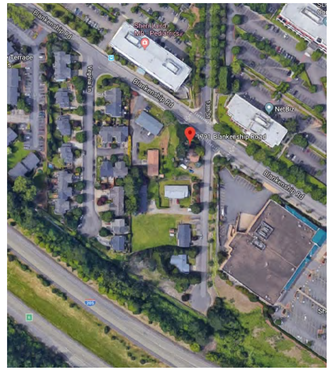

FOR PERMIT 09/28/2018

MARK	DATE	DESCRIPTION

REGISTERED ARCHITECT
PHILIP H. SYDNOR
PORTLAND, OREGON
5822
STATE OF OREGON

COVER

PERMIT SET
09/28/2018
SINGLE FAMILY RESIDENCES
1791 BLANKENSHIP ROAD
WEST LINN, OREGON 97068

A0.0

INTEGRATE ARCHITECTURE & PLANNING
www.integratearch.com
© Integrate Architecture & Planning, p.c.

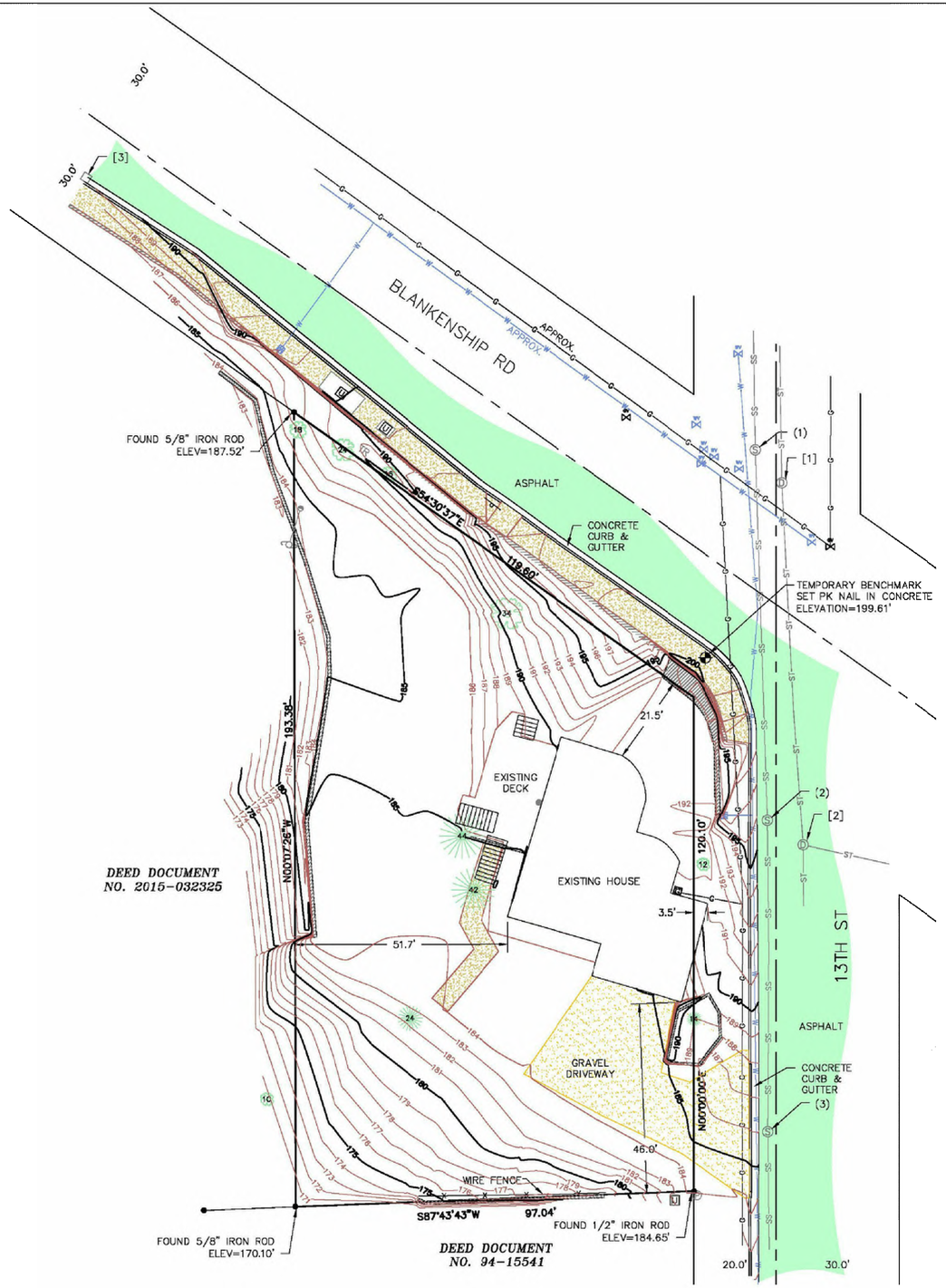

LEGEND

- EXISTING DECIDUOUS TREE W/ TRUNK DIAMETER (INCHES)(CL=CLUSTER)
- EXISTING CONIFEROUS TREE W/ TRUNK DIAMETER (INCHES)(CL=CLUSTER)
- EXISTING SIGN
- EXISTING TELEPHONE RISER
- EXISTING POWER POLE
- EXISTING GUY ANCHOR
- EXISTING ELECTRIC RISER
- EXISTING WATER METER
- EXISTING WATER VALVE
- EXISTING UNDERGROUND WATER
- EXISTING GAS VALVE
- EXISTING GAS METER
- EXISTING UNDERGROUND GAS LINE
- EXISTING CATCH BASIN
- EXISTING SANITARY MANHOLE
- EXISTING STORM MANHOLE
- EXISTING CLEANOUT
- EXISTING SANITARY SEWER LINE
- EXISTING STORM SEWER LINE
- EXISTING UTILITY VAULT
- EXISTING FENCE
- EXISTING WALL
- FOUND MONUMENTS
- LOCAL BENCHMARK ESTABLISHED
- EXISTING GRAVEL
- EXISTING CONCRETE
- EXISTING ASPHALT

N

SCALE 1" = 20'

[1] SDMH
RIM=199.1
24" IE IN N=192.5
IE OUT UNDER WATER

[2] SDMH
RIM=196.7
10" IE IN N=184.7
14" IE IN E=184.5
14" IE OUT S=184.4

[3] SDCB
GRATE=188.3
10" IE OUT N=183.8

(1) SSMH
RIM=198.9
8" IE IN N=190.2
8" IE OUT S=190.0

(2) SSMH
RIM=196.4
8" IE IN N=188.0
8" IE OUT S=187.8

(3) SSMH
RIM=186.1
8" IE IN N=175.4
8" IE OUT S=175.2

REGISTERED
PROFESSIONAL
LAND SURVEYOR

OREGON
JULY 11, 2017
DONALD SCOTT SORENSON
60310

RENEWAL DATE: JUNE 30, 2020

NOTES

1. THE PURPOSE OF THIS MAP WAS TO SHOW THE EXISTING CONDITIONS FOR 1791 BLANKENSHIP ROAD.
2. THE BASIS OF BEARINGS WAS PER THE PLAT OF "PARSONS ADDITION," CLACKAMAS COUNTY RECORDS.
3. LOCAL DATUM WAS ESTABLISHED BY CITY OF WEST LINN SANITARY SEWER MAP INFORMATION ON MANHOLE 9B-15-5, IN THE INTERSECTION OF BLANKENSHIP RD. & 13TH ST., RIM=198.93 CITY OF WEST LINN DATUM.
4. THIS MAP WAS PREPARED FOR THE EXCLUSIVE USE OF JEREMY BARNETT.
5. THIS MAP WAS PREPARED BY PLAT RECORDS, CALCULATED DATA, AND FIELD MEASUREMENTS, A RECORDED BOUNDARY SURVEY WILL NOT BE FILED.
6. ALL UTILITY LOCATIONS ARE SHOWN BY ABOVE GROUND FEATURES AND CITY OF PORTLAND MAPS. CMT TAKES NO RESPONSIBILTY OF UNDERGROUND LOCATION. PLEASE NOTIFY THE UTILITY NOTIFICATION CENTER BEFORE ANY DIGGING 1-800-332-2344.

EXISTING CONDITIONS

1791 BLANKENSHIP RD

SW 1/4 SEC 35, T 2 S, R 1 E, W.M.
CITY OF WEST LINN
CLACKAMAS COUNTY, OREGON
OCTOBER 6, 2017
DRAWN: DSS/RLMc CHECKED: DSS
SCALE 1"=20' ACCOUNT # 227
Y:\227-005\DWG\227005BASE.DWG

CMT SURVEYING AND CONSULTING
9135 SE ST HELENS ST, SUITE J
PO BOX 3251
CLACKAMAS, OR 97015
PHONE (503) 850-4672 FAX (503) 850-4590

FOR PERMIT 09/28/2018

MARK	DATE	DESCRIPTION

REGISTERED ARCHITECT
PHILIP H. SYDNOR
PORTLAND, OREGON
5822
STATE OF OREGON

SURVEY

PERMIT SET
09/28/2018
SINGLE FAMILY
RESIDENCES
1791 BLANKENSHIP ROAD
WEST LINN, OREGON 97068

A0.1

INTEGRATE
ARCHITECTURE & PLANNING
www.integratearch.com
© Integrate Architecture & Planning, p.c.

PARTITION PLAT NO. _____

A REPLAT OF A PORTION OF TRACT 4, OF THE PLAT OF "WILLAMETTE TRACTS"
LOCATED IN THE SOUTHWEST ONE-QUARTER OF SECTION 35,
TOWNSHIP 2 SOUTH, RANGE 1 EAST, OF THE WILLAMETTE MERIDIAN,
CITY OF WEST LINN, CLACKAMAS COUNTY, OREGON

DATE: NOVEMBER 2, 2017

SURVEYED FOR: JEREMY BARNETT
PO BOX 258
OREGON CITY, OR 97045

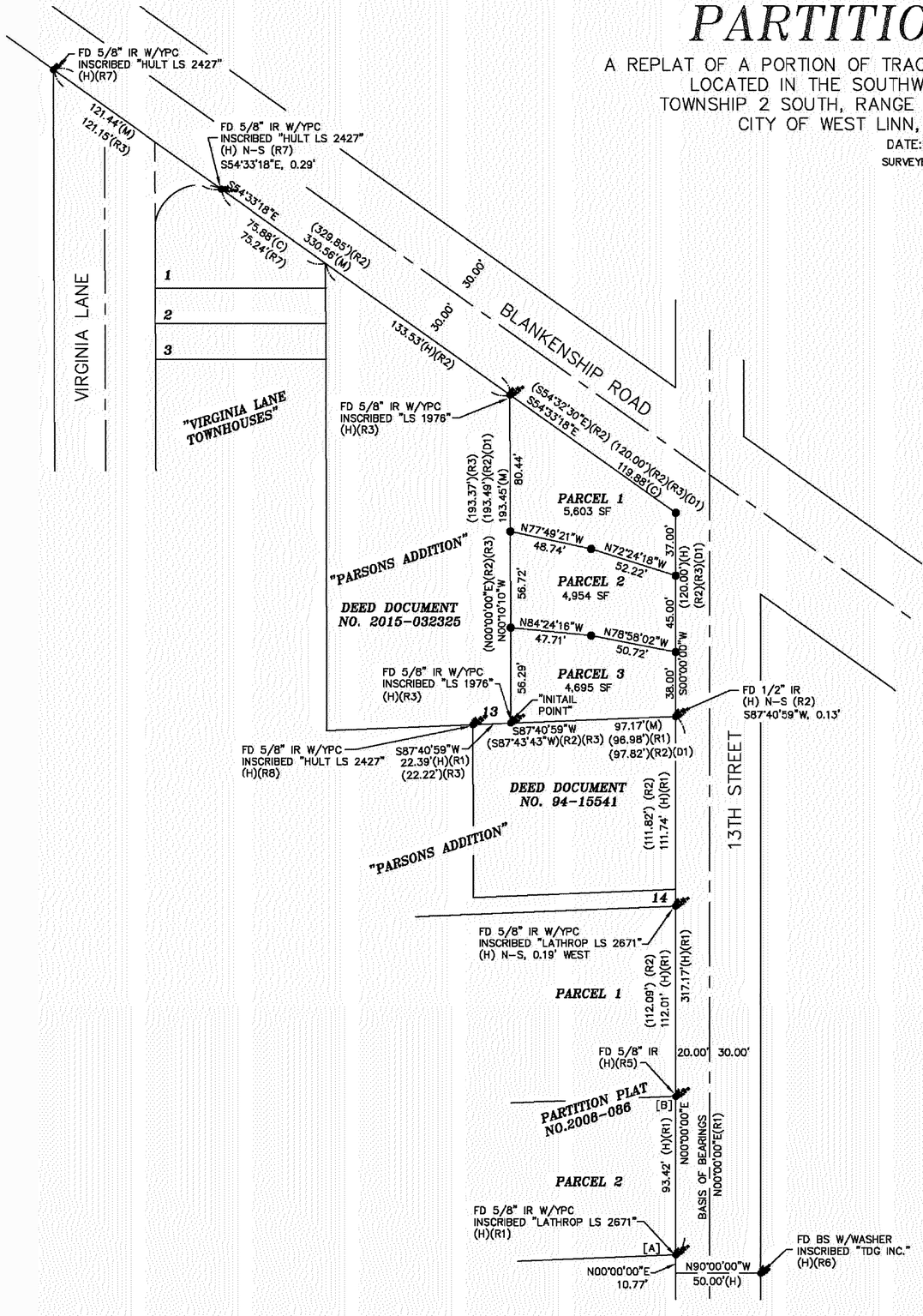

LEGEND

- ● FOUND MONUMENTS AS NOTED
- ● 5/8" X 30" IRON ROD WITH YPC INSCRIBED "CMT 60310" SET ON: _____

BS = BRASSSCREW
IR = IRON ROD
IP = IRON PIPE
FD = FOUND
SN = SURVEY NUMBER, WASHINGTON COUNTY RECORDS
(M) = MEASURED
(C) = CALCULATED
(H) = HELD
(R1) = REFERENCE SURVEY NUMBER OR PLAT NAME
( ) = RECORD DATA
N-S = NORTH-SOUTH
SF = SQUARE FEET

REFERENCE SURVEYS

(R1) PARTITION PLAT NO. 2008-086
(R2) PLAT OF "PARSONS ADDITION"
(R3) SN 24783
(R4) SN 5090
(R5) SN 12283
(R6) PLAT OF "TENTH STREET CENTRE"
(R7) PLAT OF "VIRGINIA LANE TOWNHOUSES"
(D1) DOCUMENT NO. 2004-103500

N

SCALE
50 0 25 50
1 INCH = 50 FEET

NARRATIVE

THE PURPOSE OF THIS SURVEY IS TO REESTABLISH AND MONUMENT THE BOUNDARY OF THE PROPERTY DESCRIBED IN DOCUMENT NO. 2004-103500, CLACKAMAS COUNTY DEED RECORDS, BEING A PORTION OF TRACT 4 "WILLAMETTE TRACTS", CLACKAMAS COUNTY PLAT RECORDS AND TO PARTITION AND MONUMENT THE SAME.

THE BASIS OF BEARINGS AND WEST RIGHT OF WAY LINE OF 13TH STREET, I HELD THE RECORD BEARING OF N 00°00'00 E, PER PARTITION PLAT NO. 2008-086 (R1) BETWEEN A 5/8" IRON ROD FOUND AT THE SOUTHEAST CORNER OF PARCEL 2 OF SAID PLAT AT [A], AND A 5/8" IRON ROD AT THE NORTHEAST CORNER OF SAID PARCEL 2 OF SAID PLAT AT [B], AS SHOWN.

TO ESTABLISH THE EAST LINE OF THE SUBJECT PROPERTY, BEING THE WEST RIGHT OF WAY LINE OF 13TH STREET, I HELD RECORD BEARING (N 00°00'00" E) AND RECORD DISTANCE (317.17') PER (R1) FROM THE SOUTHEAST CORNER OF SAID PARCEL 2 OF SAID PLAT TO THE SOUTHEAST CORNER OF THE SUBJECT PROPERTY. I THEN WENT RECORD BEARING (N 00°00'00" E) PER (R1) AND RECORD DISTANCE (120.00') PER (D1) TO ESTABLISH THE NORTHEAST CORNER OF THE SUBJECT PROPERTY, AS SHOWN.

TO ESTABLISH THE SOUTH LINE OF THE SUBJECT PROPERTY, I HELD THE MONUMENT FOUND NEAR THE SOUTHEAST CORNER OF THE SUBJECT PROPERTY AND THE MONUMENT HELD AT THE SOUTHEAST CORNER OF LOT 13 "PARSONS ADDITION" (R2), CLACKAMAS COUNTY PLAT RECORDS, AS SHOWN.

TO ESTABLISH THE WEST LINE OF THE SUBJECT PROPERTY, I HELD THE MONUMENT AT THE SOUTHEAST CORNER OF LOT 13, "PARSONS ADDITION" (R2), AND THE NORTHEAST CORNER OF SAID LOT AND PLAT, AS SHOWN.

TO ESTABLISH THE NORTHERLY LINE OF THE SUBJECT PROPERTY, BEING THE SOUTHERLY RIGHT OF WAY LINE OF BLANKENSHIP ROAD, I HELD THE MONUMENT FOUND AT THE NORTHEAST CORNER OF SAID LOT AND PLAT, AND THE MONUMENT ESTABLISHED AT THE NORTHEAST CORNER OF THE SUBJECT PROPERTY, AS SHOWN.

REGISTERED
PROFESSIONAL
LAND SURVEYOR
DRAFT
OREGON
JULY 11, 2017
DONALD SCOTT SORENSON
60310

RENEWAL DATE: JUNE 30, 2020

SHEET 1 OF 2

CMT SURVEYING AND CONSULTING
20330 SE HIGHWAY 212
DAMASCUS, OR 97089
PHONE (503) 850-4672 FAX (503) 850-4590
Y:\227-005\dwg\227-005PART1.dwg---DSS

FOR PERMIT 09/28/2018

MARK	DATE	DESCRIPTION

REGISTERED ARCHITECT
PHILIP H. SYDNOR
PORTLAND, OREGON
5822
STATE OF OREGON

PLOT PARTITION MAP

PERMIT SET
09/28/2018
SINGLE FAMILY RESIDENCES
1791 BLANKENSHIP ROAD
WEST LINN, OREGON 97068

A0.2

INTEGRATE
ARCHITECTURE & PLANNING
www.integratearch.com

© Integrate Architecture & Planning, p.c.

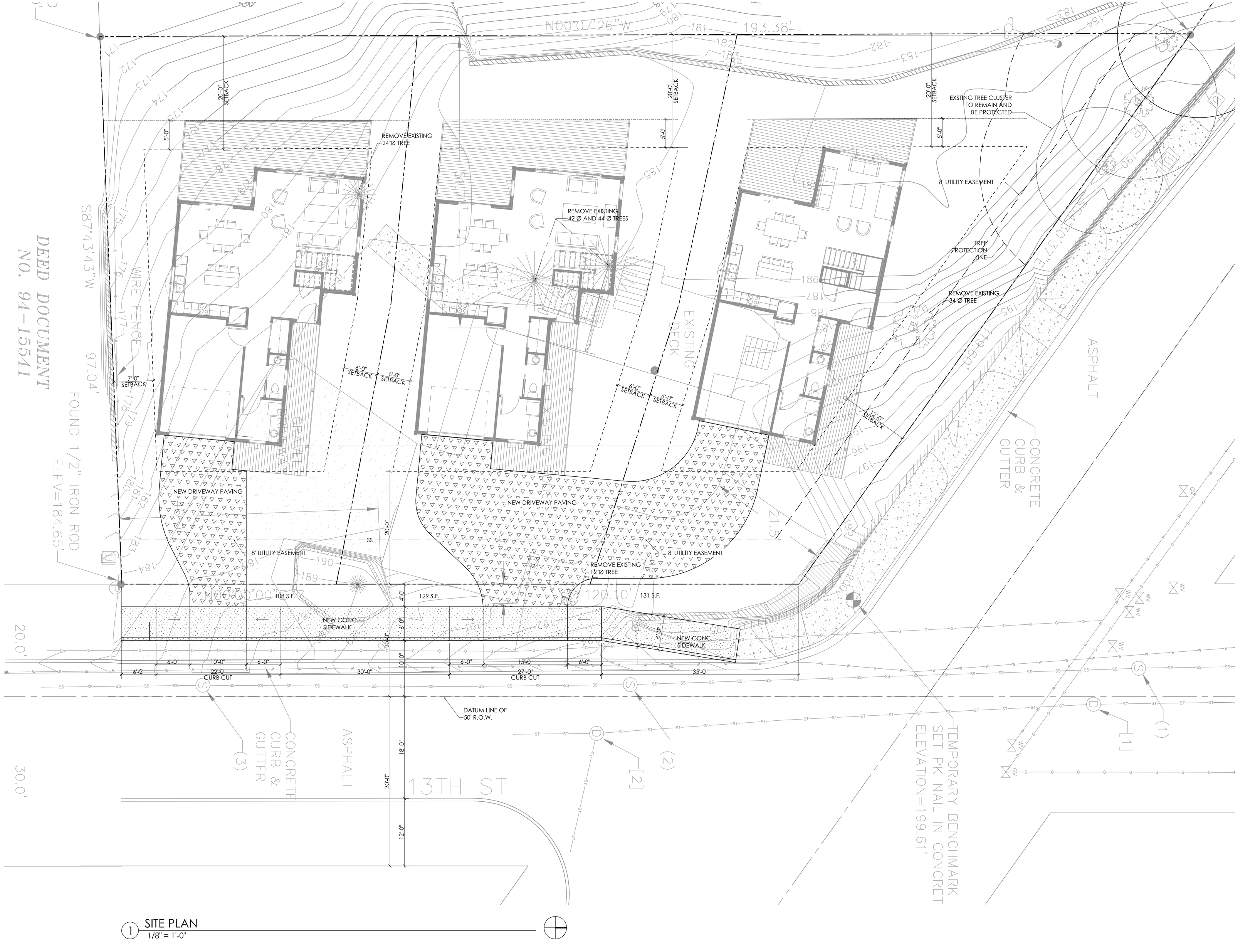

1 SITE PLAN
1/8" = 1'-0"

MARK	DATE	DESCRIPTION

REGISTERED ARCHITECT
PHILIP H. SYDNOR
PORTLAND, OREGON
5822
STATE OF OREGON

SITE PLAN

LU Submittal
03/12/2019
SINGLE FAMILY RESIDENCES
1791 BLANKENSHIP ROAD
WEST LINN, OREGON 97068

A1.1

INTEGRATE
ARCHITECTURE & PLANNING
www.integratearch.com
© Integrate Architecture & Planning, p.c.

1 SITE PLAN
1/8" = 1'-0"

MARK DATE DESCRIPTION

REGISTERED ARCHITECT
PHILIP H. SYDNOR
PORTLAND, OREGON
5822
STATE OF OREGON

TOPOGRAPHY
SITE SLOPE PLAN

PERMIT SET
03/12/2019
SINGLE FAMILY
RESIDENCES
1791 BLANKENSHIP ROAD
WEST LINN, OREGON 97068

A1.1a

INTEGRATE
ARCHITECTURE & PLANNING
www.integratearch.com
© Integrate Architecture & Planning, p.c.

1 EXISTING TREE PLAN
1/8" = 1'-0"

MARK	DATE	DESCRIPTION

REGISTERED ARCHITECT
PHILIP H. SYDNOR
PORTLAND, OREGON
5822
STATE OF OREGON

EXSITING TREE PLAN

PERMIT SET
03/12/2019
SINGLE FAMILY RESIDENCES
1791 BLANKENSHIP ROAD
WEST LINN, OREGON 97068

A1.1b

INTEGRATE
ARCHITECTURE & PLANNING
www.integratearch.com
© Integrate Architecture & Planning, p.c.

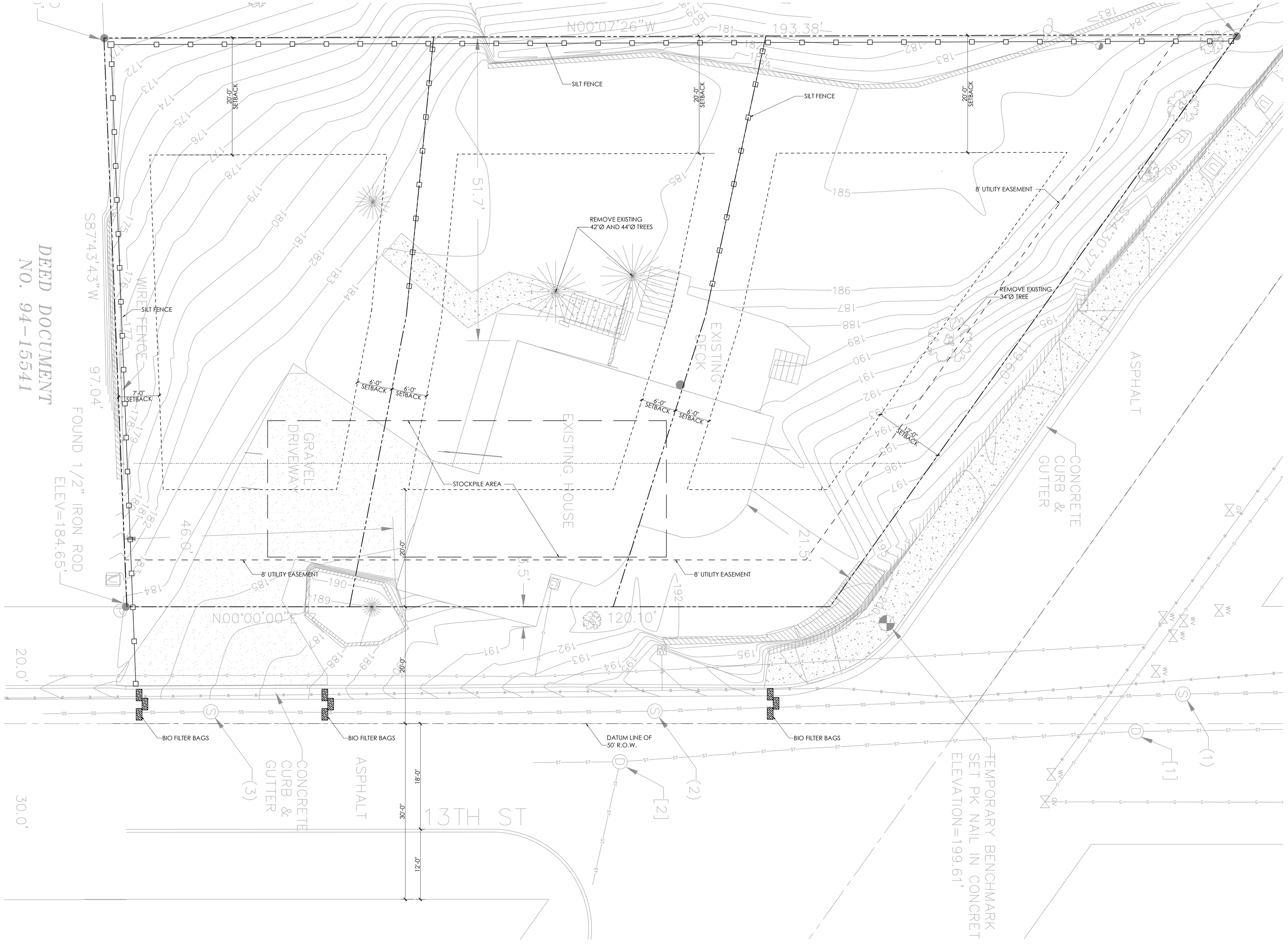

1 SITE PLAN
1/8" = 1'-0"

SITE SUMMARY

DEED DOCUMENT NO. 94-15541

MARK	DATE	DESCRIPTION

REGISTERED ARCHITECT
PHILIP H. SYDNOR
PORTLAND, OREGON
5822
STATE OF OREGON

GRADING AND EROSION CONTROL

PERMIT SET
03/12/2019
SINGLE FAMILY RESIDENCES
1791 BLANKENSHIP ROAD
WEST LINN, OREGON 97068

A1.1c

INTEGRATE
ARCHITECTURE & PLANNING
www.integratearch.com
© Integrate Architecture & Planning, p.c.

PROPERTY LINE

BLANKENSHIP RD

13TH STREET

RAINWATER LEADER

FLOW THRU PLANTER, SEE CIVIL DRAWINGS

8' UTILITY EASEMENT

(N) WATER METER

(E) GAS METER

(N) RELOCATED WATER METER

RELOCATE (E) WATER METER

REF.

TR

UTILITY LEGEND

ST ——— ST	(E) STORM SEWER LINE
D	(E) STORM MANHOLE
SS ——— SS	(E) SANITARY SEWER LINE
S	(E) SANITARY MANHOLE
W ——— W	(E) WATER LINE
W	(E) WATER METER
WV	(E) WATER VALVE
G ——— G	(E) UNDERGROUND GAS LINE
G	(E) GAS METER
GV	(E) GAS VALVE
U	(E) UTILITY VAULT
	(E) POWER POLE
G	(N) GAS LINE
SS	(N) SANITARY SEWER
W	(W) WATER LINE
OV. FL.	STORM OVERFLOW (DAYLIGHT AT STREET)

COORDINATE UNDERGROUND UTILITIES WITH GRADING, EXCAVATION AND OTHER SITE WORK.

MARK	DATE	DESCRIPTION

REGISTERED ARCHITECT
PHILIP H. SYDNOR
PORTLAND, OREGON
5822
STATE OF OREGON

UTILITY PLAN

PERMIT SET
03/12/2019
SINGLE FAMILY RESIDENCES
1791 BLANKENSHIP ROAD
WEST LINN, OREGON 97068

A1.2

INTEGRATE
ARCHITECTURE & PLANNING
www.integratearch.com
© Integrate Architecture & Planning, p.c.

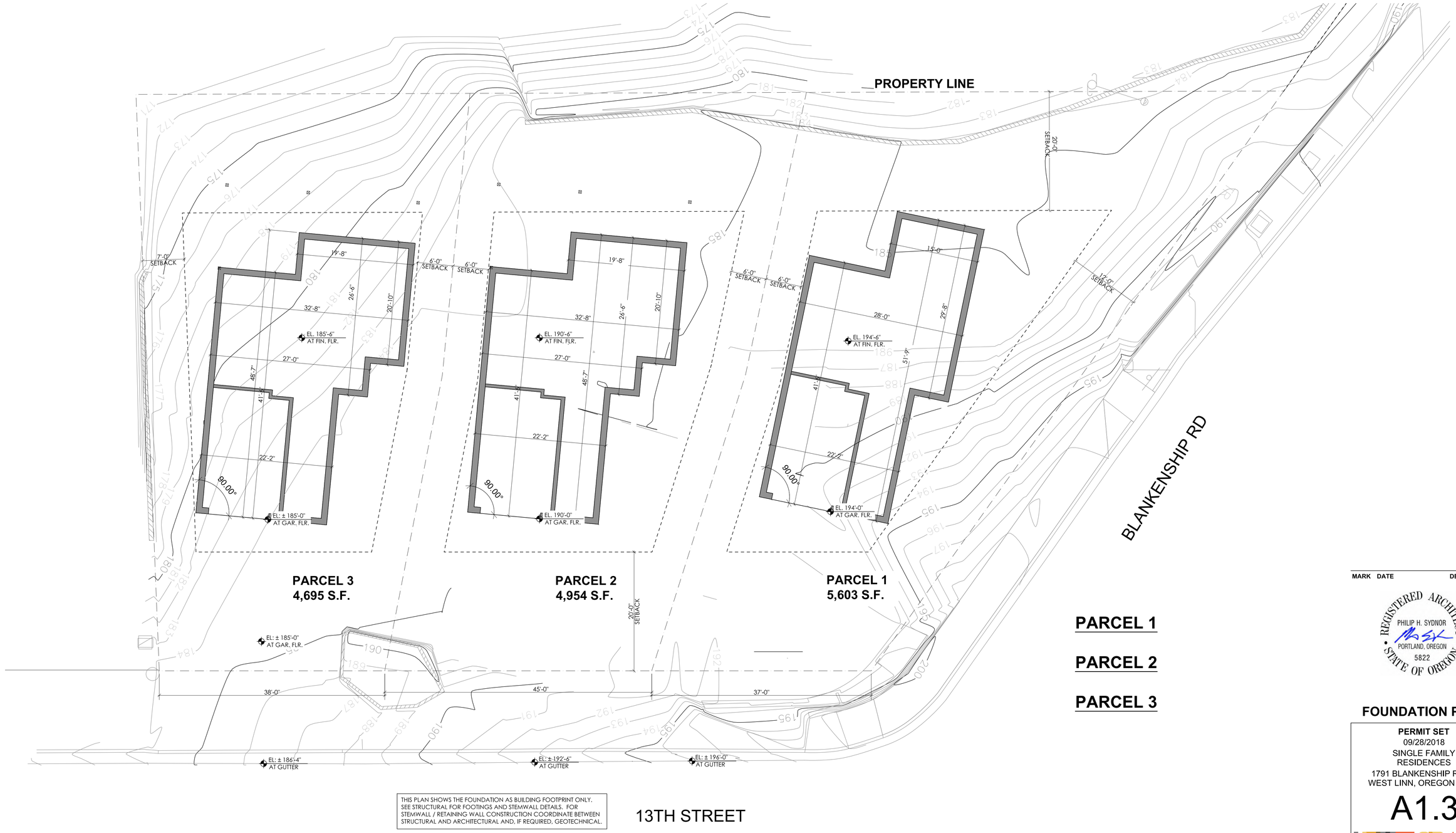

PARCEL 1

PARCEL 2

PARCEL 3

THIS PLAN SHOWS THE FOUNDATION AS BUILDING FOOTPRINT ONLY. SEE STRUCTURAL FOR FOOTINGS AND STEMWALL DETAILS. FOR STEMWALL / RETAINING WALL CONSTRUCTION COORDINATE BETWEEN STRUCTURAL AND ARCHITECTURAL AND, IF REQUIRED, GEOTECHNICAL.

1 FOUNDATION PLAN
1/8" = 1'-0"

MARK	DATE	DESCRIPTION

REGISTERED ARCHITECT
PHILIP H. SYDNOR
PORTLAND, OREGON
5822
STATE OF OREGON

FOUNDATION PLAN

PERMIT SET
09/28/2018
SINGLE FAMILY RESIDENCES
1791 BLANKENSHIP ROAD
WEST LINN, OREGON 97068

A1.3

INTEGRATE
ARCHITECTURE & PLANNING
www.integratearch.com
© Integrate Architecture & Planning, p.c.

THIS DETAIL DRAWING SHALL NOT BE ALTERED OR CHANGED IN ANY MANNER EXCEPT BY THE CITY ENGINEER. IT IS THE RESPONSIBILITY OF THE USER TO ACQUIRE THE MOST CURRENT VERSION OF THE DETAIL.

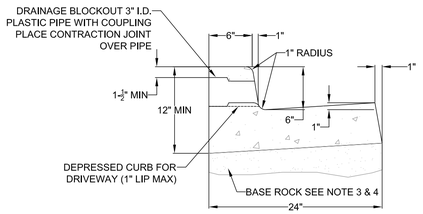

FLUSH, DEPRESSED CURB FOR WHEELCHAIR RAMP 2% MAX SLOPE

TYPICAL CURB AND GUTTER

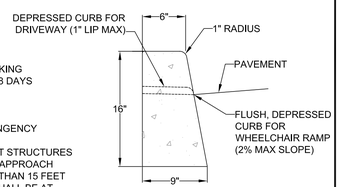

TYPICAL STRAIGHT CURB

NOTE:

1. CONCRETE SHALL HAVE A BREAKING STRENGTH OF 3300 PSI AFTER 28 DAYS
2. CONTRACTION JOINTS:
   A) TO BE PROVIDED:
      -AT EACH POINT OF TANGENCY
      -AT EACH COLD JOINT
      -AT EACH SIDE OF INLET STRUCTURES
      -AT BOTH SIDES OF AN APPROACH
   B) SPACING TO BE NOT MORE THAN 15 FEET
   C) THE DEPTH OF THE JOINT SHALL BE AT LEAST 1/3 OF THE THICKNESS OF CONCRETE
   D) EXPANSION JOINTS SHALL NOT BE USED
3. BASE ROCK - 1-1/2"-0", 95% COMPACTION PER AASHTO T-180 ROCK SHALL BE TO SUBGRADE OF THE STREET SECTION OR 4" IN DEPTH, WHICHEVER IS GREATER
4. FULL DEPTH PREPARED ROCK SECTION SHALL EXTEND 1' HORIZONTALLY BEYOND BOTH SIDES OF CURB AND GUTTER
5. DRAINAGE BLOCK - 3" DIA. PLASTIC PIPE
   A) DRAINAGE ACCESS THROUGH EXISTING CURBS SHALL BE DONE BY:
      -CORE DRILLING
      -VERTICAL SAWCUT OF CURB 24" EACH SIDE OF DRAIN AND RE-POURED TO FULL DEPTH OF CURB
6. STAMP TOP OF CURB WITH "W" AT WATER SERVICE CROSSING AND "S" AT SANITARY LATERAL CROSSING

TYPICAL CURBS

City of West Linn

DATE: 2010
DRAWING NO. WL-501
FILE NO.

THIS DETAIL DRAWING SHALL NOT BE ALTERED OR CHANGED IN ANY MANNER EXCEPT BY THE CITY ENGINEER. IT IS THE RESPONSIBILITY OF THE USER TO ACQUIRE THE MOST CURRENT VERSION OF THE DETAIL.

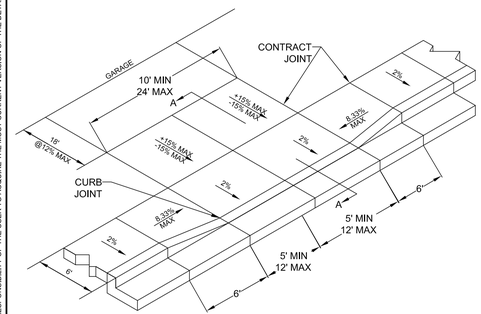

SIDEWALK ADJACENT TO CURB

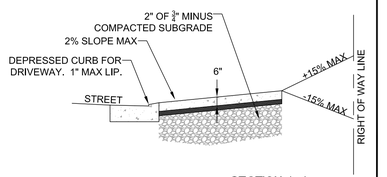

SECTION A-A

NOTE:

1. CONCRETE SHALL HAVE A MINIMUM BREAKING STRENGTH OF 3300 PSI AFTER 28 DAYS 6 SACK MIX
2. CURB SHALL BE TROWELED JOINT WITH MIN. 1/2" RADIUS ALONG BACK OF CURB
3. DRIVEWAY SHALL BE A MINIMUM 6" THICK
4. DRIVEWAY CURB CUT SHALL COMPLY WITH THE CONDITIONS OF 5.0070, "WIDTH AND LOCATION OF CURB CUTS"
5. FOR REPLACEMENT OF EXISITNG APPROACH:

   A. MUST MEET CURRENT ADA REQUIREMENTS TO GREATEST DEGREE POSSIBLE
   B. DAMAGED ROADWAY MUST BE SAWCUT AND REPAVED WITH CLASS C HOT MIX ASPHALT

RESIDENTIAL DRIVEWAY WITH SIDEWALK ADJACENT TO CURB

City of West Linn

DATE: 2010
DRAWING NO. WL-503B
FILE NO.

THIS DETAIL DRAWING SHALL NOT BE ALTERED OR CHANGED IN ANY MANNER EXCEPT BY THE CITY ENGINEER. IT IS THE RESPONSIBILITY OF THE USER TO ACQUIRE THE MOST CURRENT VERSION OF THE DETAIL.

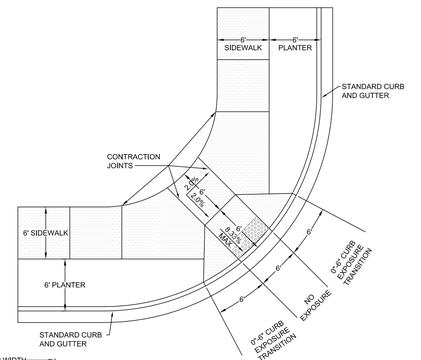

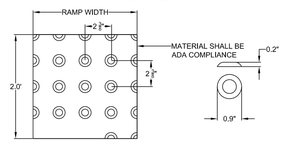

RAMP TEXTURE PATTERN DETAIL

TRUNCATED DOME DETAIL

NOTE:

1. LANDING AT TOP OF RAMP SHALL NOT EXCEED 2% IN ANY DIRECTION AND SHALL BE A MINIMUM OF 60" x 60".
2. RAMP CROSS SLOPE SHALL NOT EXCEED 2% (AS MEASURED PERPENDICULAR TO PEDESTRIAN TRAFFIC FLOW).
3. TRUNCATED DOME MUST EXTEND THE FULL WIDTH OF THE RAMP AND COVER THE FIRST 2 FEET OF THE RAMP CLOSEST TO THE STREET.
4. TRANSITIONS FROM THE RAMP TO THE WALKWAY, GUTTER, AND STREET MUST BE FLUSH (LEVEL) AND FREE OF ABRUPT LEVEL CHANGES.
5. THE GUTTER OR ADJACENT ROADWAY MUST HAVE A SLOPE OF NO MORE THAN 5 PERCENT (1:20) TOWARD THE RAMP.
6. FLARED SIDES ("WING") OF THE CURB RAMP SHALL NOT EXCEED 10% IN SLOPE (8.33% IF PEDESTRIAN TRAVEL IS REQUIRED OVER THEM PER ADA STANDARDS - I.E. IF MINIMUM 48" x 48" (FOR EXISTING SITES ONLY) LANDING IS NOT PROVIDED AT TOP OF RAMP).
7. CONCRETE STRENGTH SHALL BE 3300 PSI.
8. PLACE CONTRACTION JOINTS AS SHOWN ABOVE.
9. NO ABOVE GROUND UTILITIES ARE PERMITTED WITHIN RAMP AREA.
10. WHEN EITHER OPPOSING CURB RAMP HAS AN EXISTING TWIN RAMP, USE DETAIL WL-507B.

SINGLE CURB RAMP (ALLOWED WITH CITY ENGINEER APPROVAL ONLY)

City of West Linn

DATE: 2010
DRAWING NO. WL-507A
FILE NO.

FOR PERMIT 09/28/2018

MARK	DATE	DESCRIPTION

REGISTERED ARCHITECT
PHILIP H. SYDNOR
PORTLAND, OREGON
5822
STATE OF OREGON

RIGHT-OF-WAY DETAILS

PERMIT SET
09/28/2018
SINGLE FAMILY
RESIDENCES
1791 BLANKENSHIP ROAD
WEST LINN, OREGON 97068

A1.4

INTEGRATE
ARCHITECTURE & PLANNING
www.integratearch.com
© Integrate Architecture & Planning, p.c.

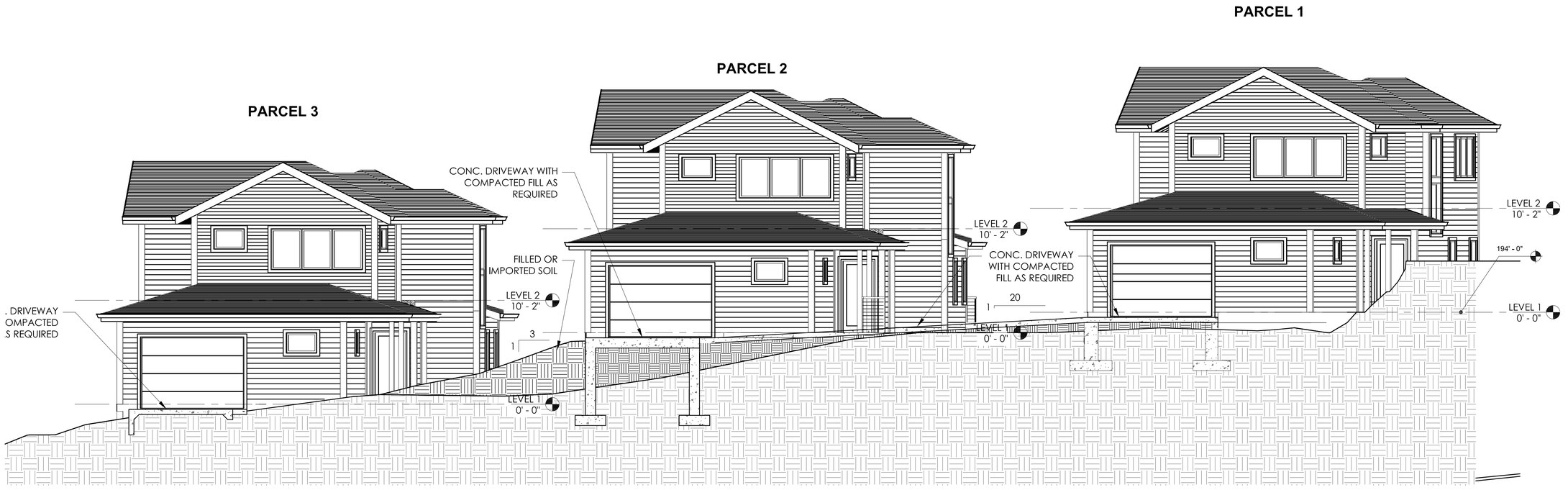

4 EAST ELEVATION
3/16" = 1'-0"

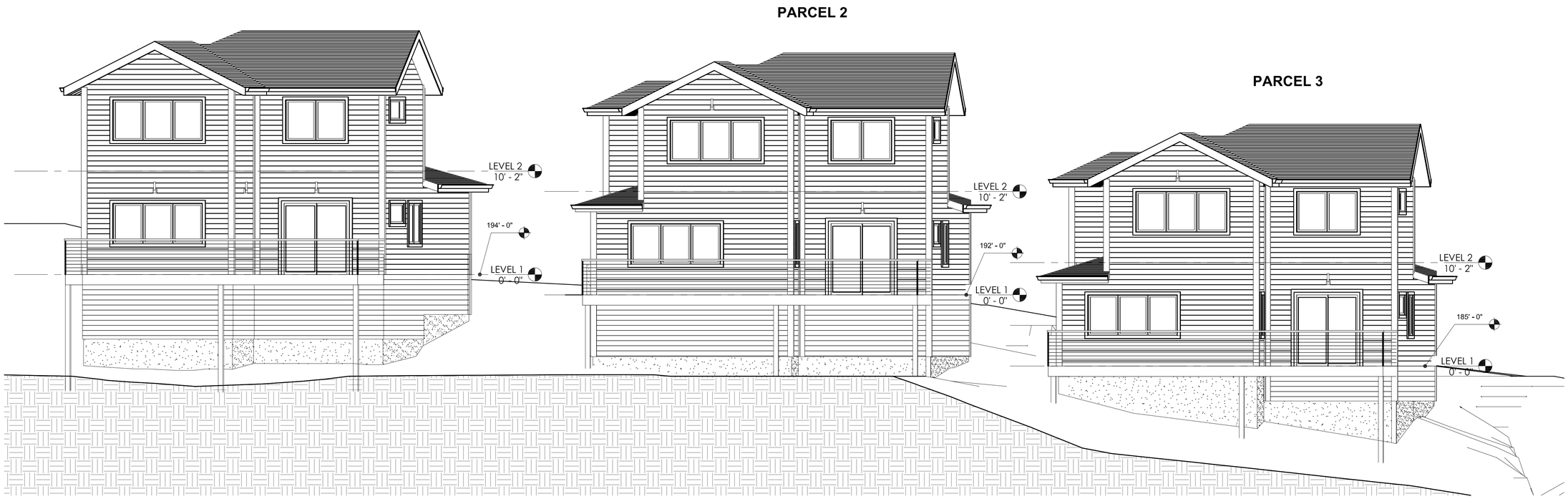

2 WEST ELEVATION
3/16" = 1'-0"

FOR PERMIT 09/28/2018

MARK	DATE	DESCRIPTION

REGISTERED ARCHITECT
PHILIP H. SYDNOR
PORTLAND, OREGON
5822
STATE OF OREGON

SITE ELEVATIONS

PERMIT SET
09/28/2018
SINGLE FAMILY
RESIDENCES
1791 BLANKENSHIP ROAD
WEST LINN, OREGON 97068

A1.4

INTEGRATE
ARCHITECTURE & PLANNING
www.integratearch.com
© Integrate Architecture & Planning, p.c.

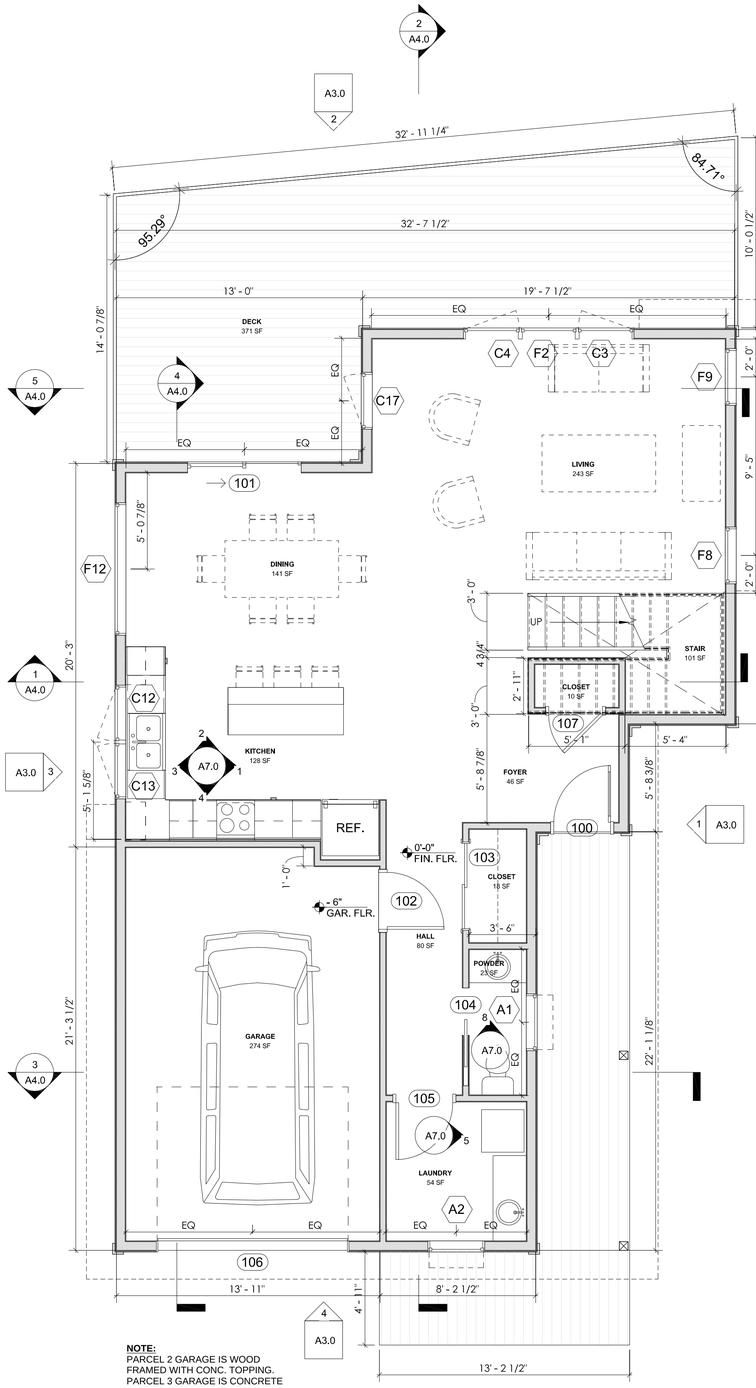

NOTE:
PARCEL 2 GARAGE IS WOOD FRAMED WITH CONC. TOPPING.
PARCEL 3 GARAGE IS CONCRETE SLAB-ON-GRADE.
SEE STRUCTURAL.

1 LEVEL 1 PLAN — 946 SF
1/4" = 1'-0"

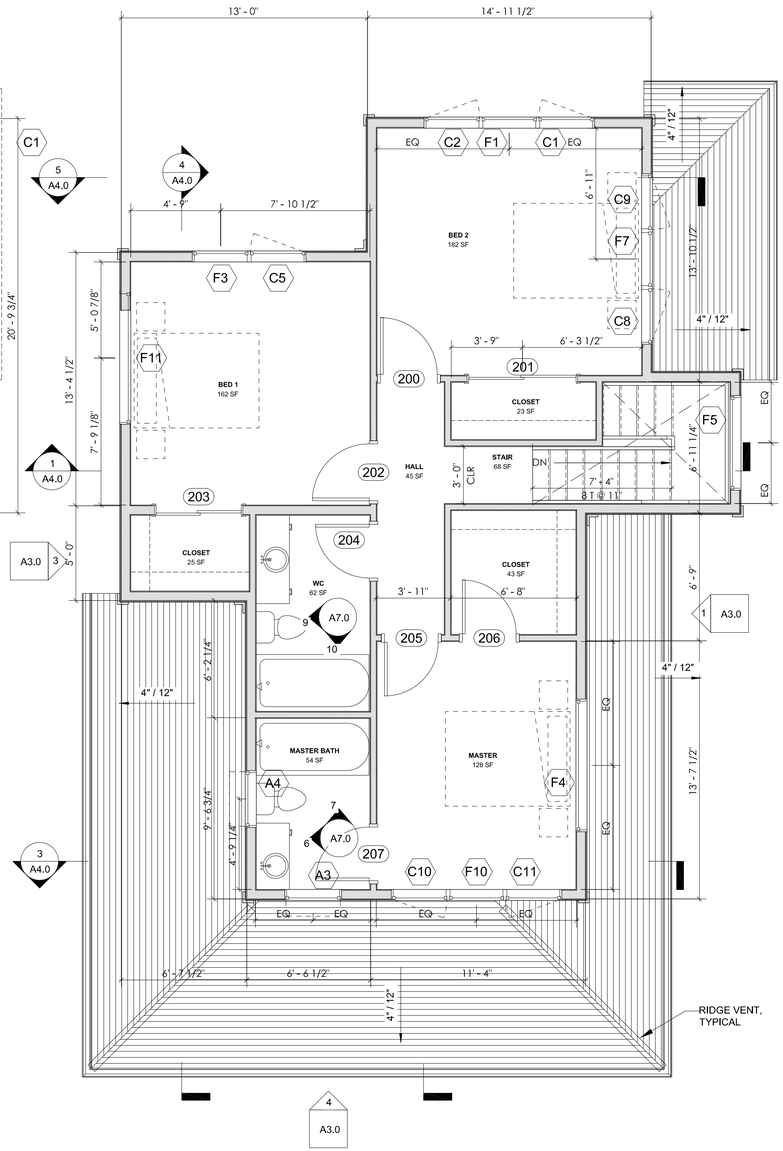

2 LEVEL 2 PLAN — 931 SF
1/4" = 1'-0"

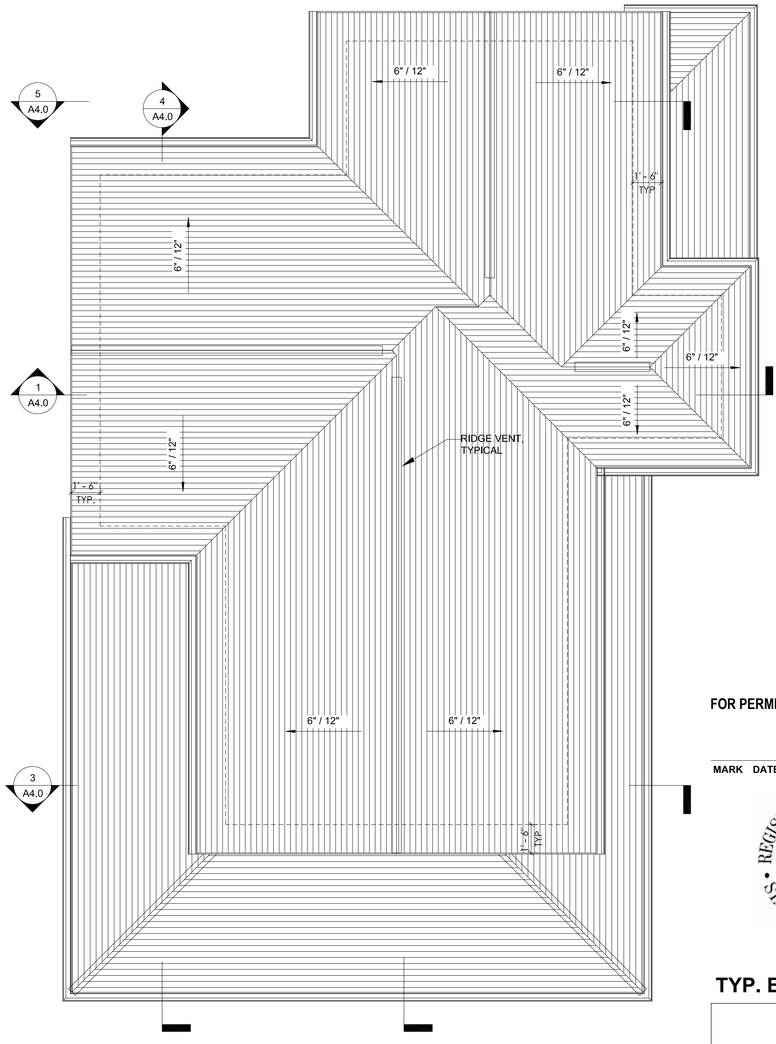

3 ROOF PLAN
1/4" = 1'-0"

FOR PERMIT 09/28/2018

MARK	DATE	DESCRIPTION

REGISTERED ARCHITECT
PHILIP H. SYDNOR
PORTLAND, OREGON
5822
STATE OF OREGON

TYP. BUILDING PLANS

PERMIT SET
09/28/2018
SINGLE FAMILY RESIDENCES
1791 BLANKENSHIP ROAD
WEST LINN, OREGON 97068

A2.0

INTEGRATE
ARCHITECTURE & PLANNING
www.integratearch.com
© Integrate Architecture & Planning, p.c.

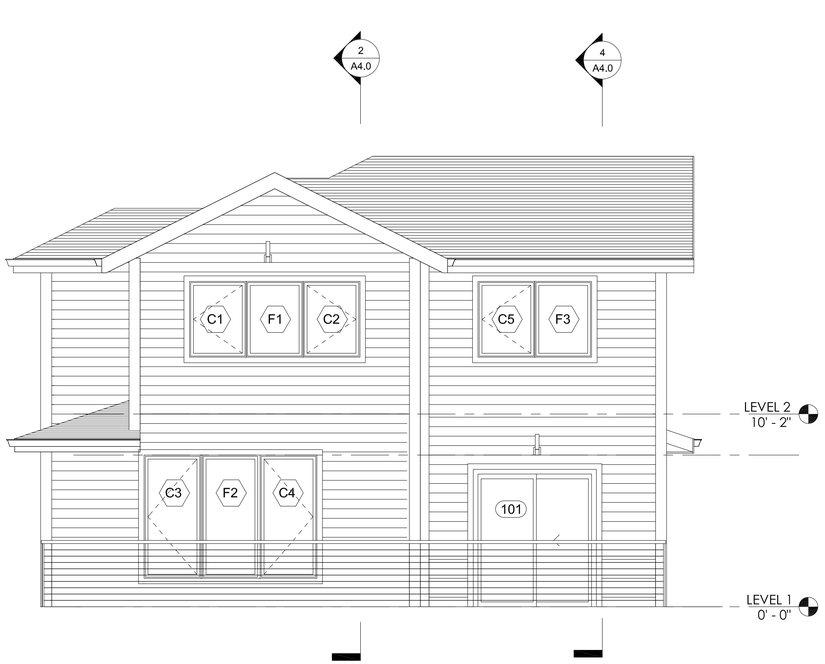

2 NORTH ELEVATION
1/4" = 1'-0"

1 EAST ELEVATION
1/4" = 1'-0"

6" LAP SIDING
(2,058 SF)

4" ACCENT LAP SIDING
(560 SF)

NOTES

1. SEE SECTIONS AND STRUCTURAL FOR FOUNDATION DESIGN.
2. SEE SURVEY FOR TOPOGRAPHIC INFORMATION RELATING TO SITE SLOPE.

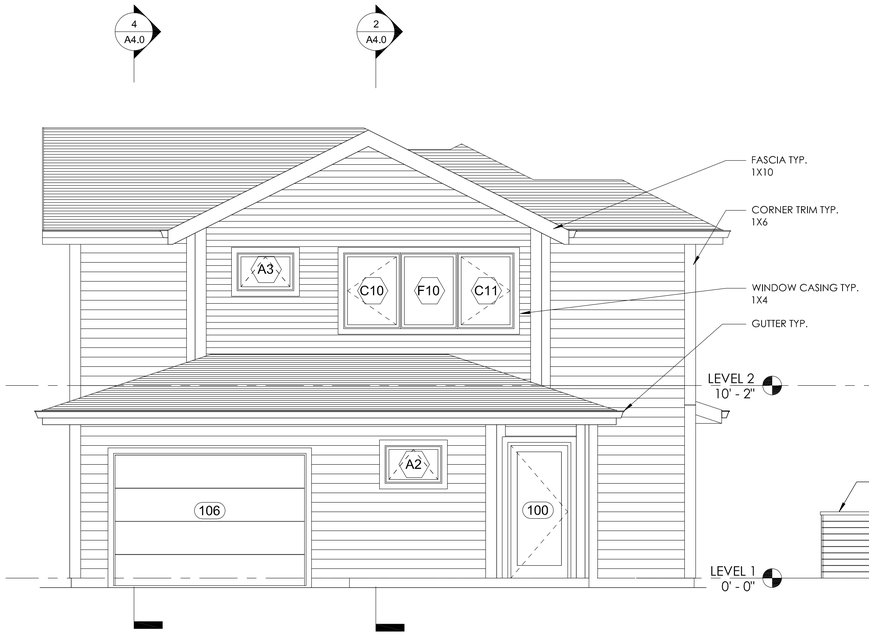

4 SOUTH ELEVATION
1/4" = 1'-0"

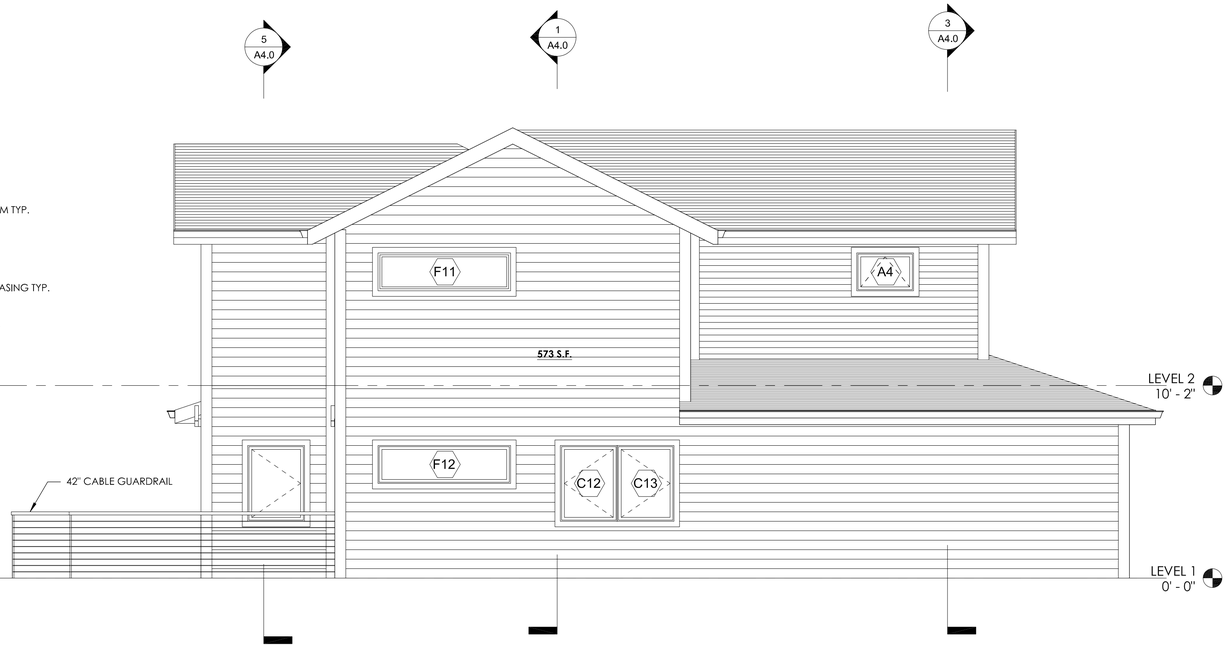

3 WEST ELEVATION
1/4" = 1'-0"

FOR PERMIT 09/28/2018

MARK	DATE	DESCRIPTION

REGISTERED ARCHITECT
PHILIP H. SYDNOR
PORTLAND, OREGON
5822
STATE OF OREGON

TYP. BUILDING ELEVATIONS

PERMIT SET
09/28/2018
SINGLE FAMILY RESIDENCES
1791 BLANKENSHIP ROAD
WEST LINN, OREGON 97068

A3.0

INTEGRATE
ARCHITECTURE & PLANNING
www.integratearch.com
© Integrate Architecture & Planning, p.c.

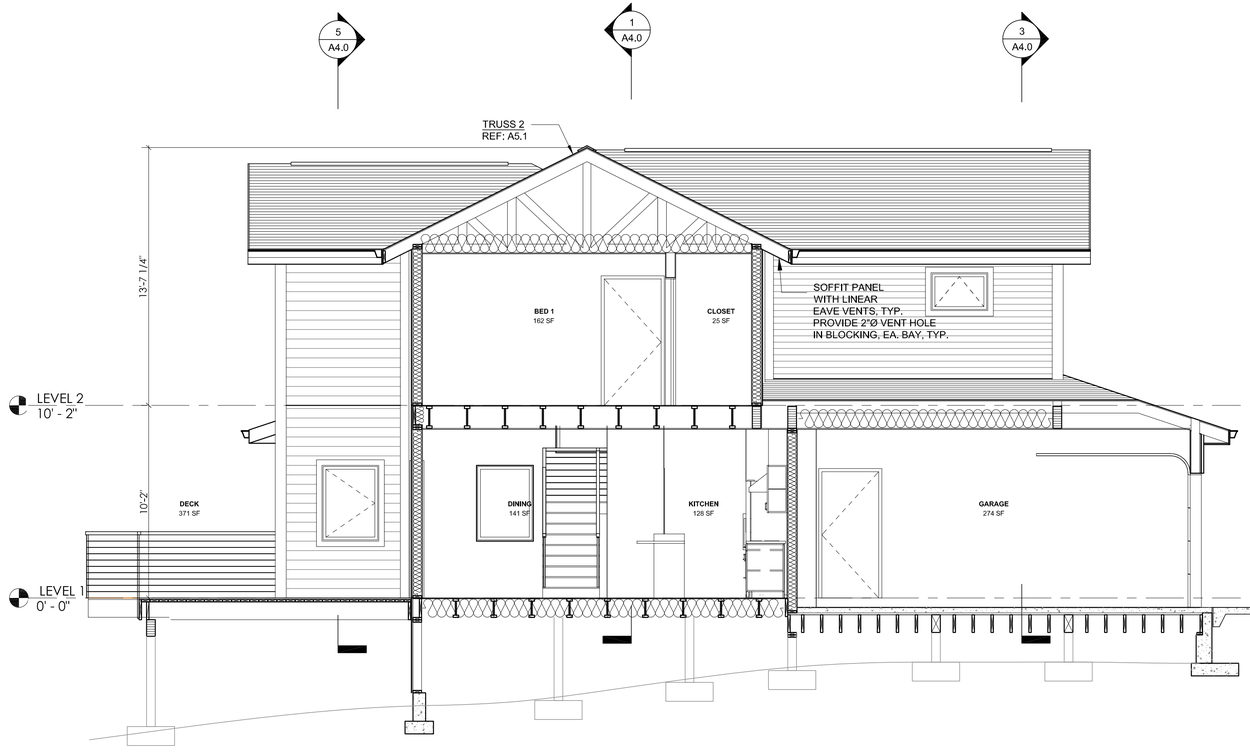

4 Section 1
1/4" = 1'-0"

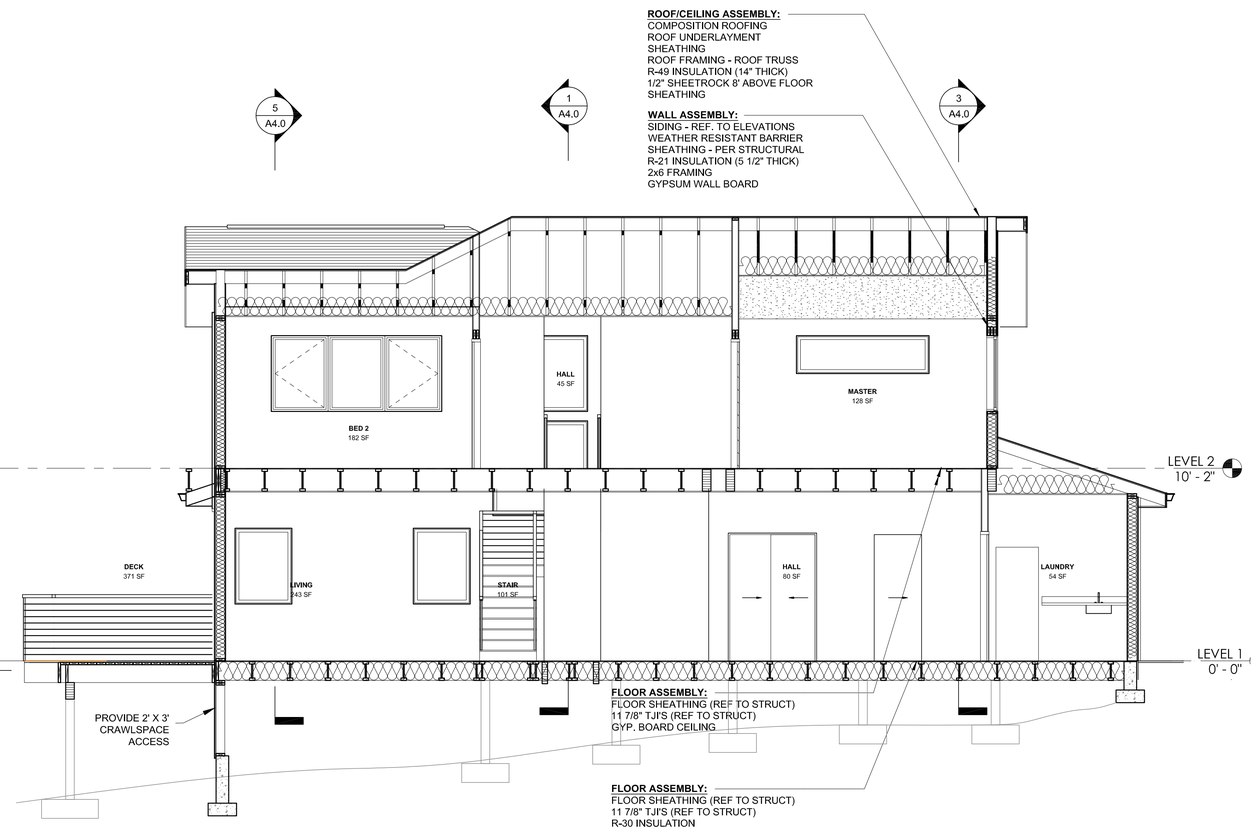

2 Section 2
1/4" = 1'-0"

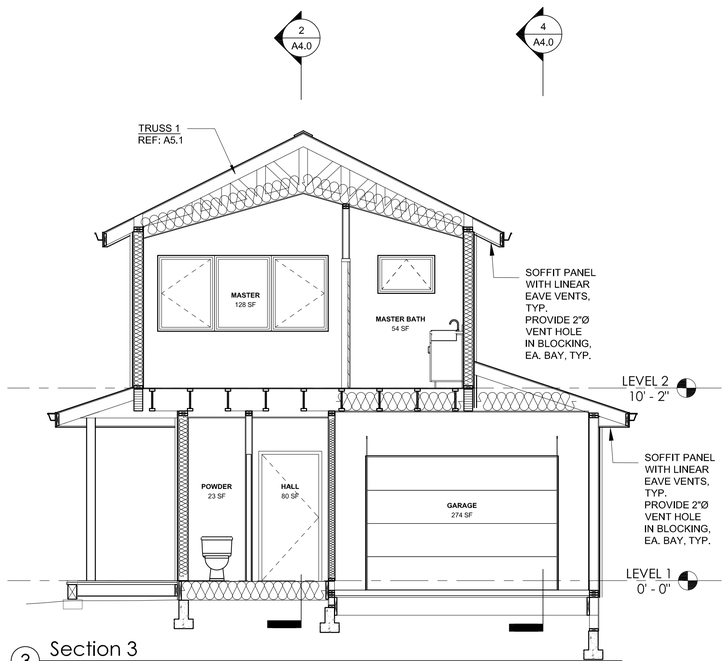

3 Section 3
1/4" = 1'-0"

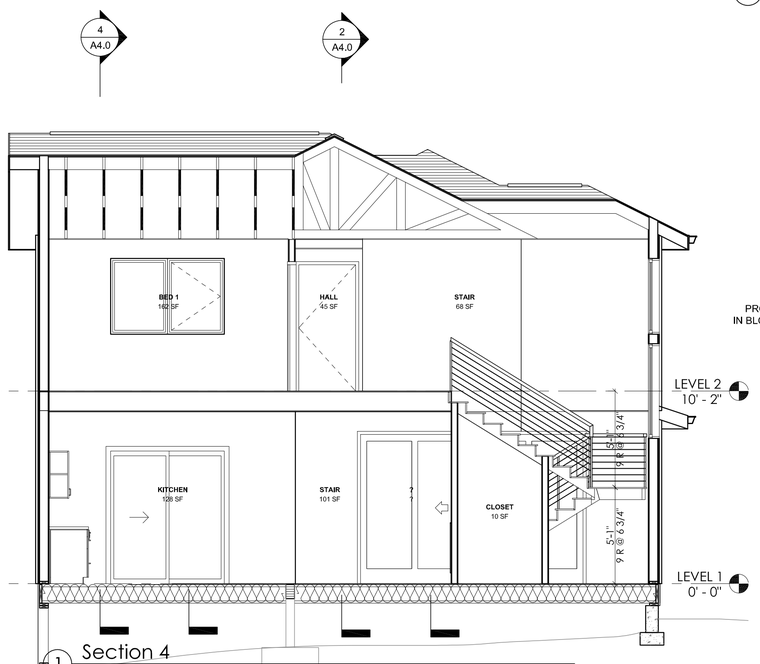

1 Section 4
1/4" = 1'-0"

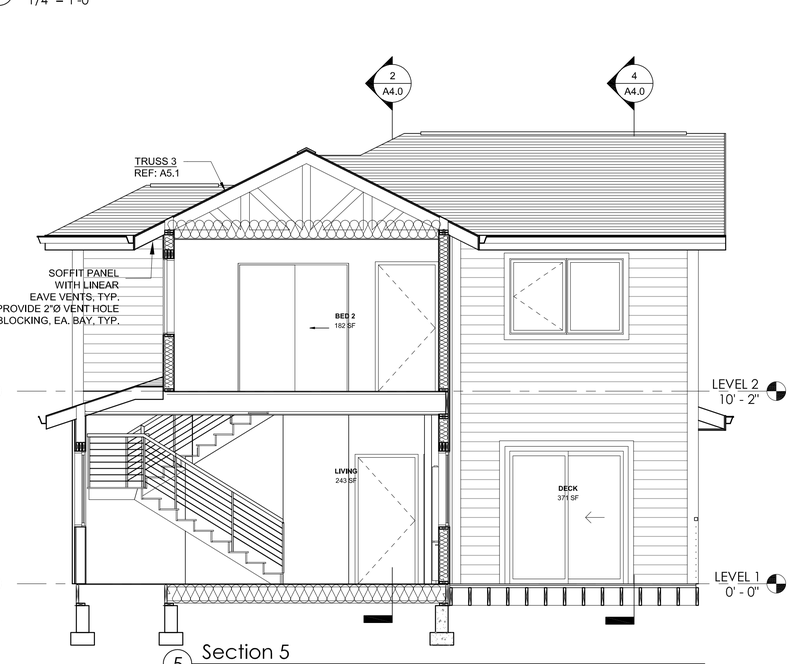

5 Section 5
1/4" = 1'-0"

FOR PERMIT 09/28/2018

MARK	DATE	DESCRIPTION

REGISTERED ARCHITECT
PHILIP H. SYDNOR
PORTLAND, OREGON
5822
STATE OF OREGON

TYP. BUILDING SECTIONS

PERMIT SET
09/28/2018
SINGLE FAMILY
RESIDENCES
1791 BLANKENSHIP ROAD
WEST LINN, OREGON 97068

A4.0

INTEGRATE
ARCHITECTURE & PLANNING
www.integratearch.com
© Integrate Architecture & Planning, p.c.

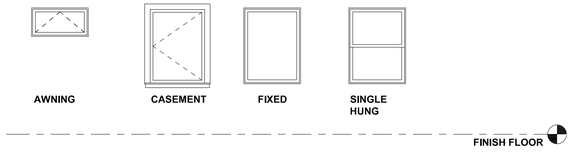

WINDOW TYPES
1/4" = 1'-0"

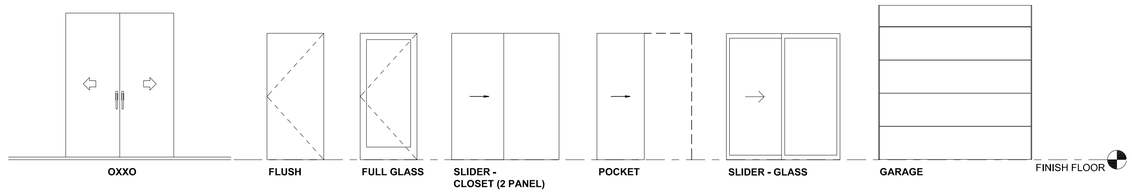

DOOR TYPES
1/4" = 1'-0"

WINDOW SCHEDULE UNIT A

MARK	Level	ROOM NAME	TYPE	SIZE			COMMENTS
				WIDTH	HEIGHT	SILL HT.	
LEVEL 1							
A1	LEVEL 1	POWDER	AWNING	3' - 0"	2' - 0"	5' - 0"	TEMPERED
A2	LEVEL 1	LAUNDRY	AWNING	3' - 0"	2' - 0"	5' - 0"	
C12	LEVEL 1	KITCHEN	CASEMENT	3' - 0"	4' - 0"	3' - 0"	
C13	LEVEL 1	KITCHEN	CASEMENT	3' - 0"	4' - 0"	3' - 0"	
C17	LEVEL 1	DECK	CASEMENT	3' - 0"	4' - 0"	3' - 0"	
F6	LEVEL 1	STAIR	FIXED	5' - 0"	5' - 0"	7' - 8"	
C3	LEVEL 1	LIVING	CASEMENT	3' - 0"	6' - 6"	1' - 6"	
F2	LEVEL 1	LIVING	FIXED	3' - 0"	6' - 6"	1' - 6"	
C4	LEVEL 1	LIVING	CASEMENT	3' - 0"	6' - 6"	1' - 6"	
F8	LEVEL 1	LIVING	FIXED	3' - 0"	4' - 0"	3' - 0"	
F9	LEVEL 1	LIVING	FIXED	3' - 0"	4' - 0"	3' - 0"	
F12	LEVEL 1	DINING	FIXED	7' - 0"	2' - 0"	5' - 0"	
LEVEL 2							
A3	LEVEL 2	MASTER BATH	AWNING	3' - 0"	2' - 0"	5' - 0"	TEMPERED
A4	LEVEL 2	MASTER BATH	AWNING	3' - 0"	2' - 0"	5' - 0"	TEMPERED
C1	LEVEL 2	BED 2	CASEMENT	3' - 0"	4' - 0"	3' - 0"	
C2	LEVEL 2	BED 2	CASEMENT	3' - 0"	4' - 0"	3' - 0"	
C5	LEVEL 2	BED 1	CASEMENT	3' - 0"	4' - 0"	3' - 0"	
C8	LEVEL 2	BED 2	CASEMENT	3' - 0"	4' - 0"	3' - 0"	
C9	LEVEL 2	BED 2	CASEMENT	3' - 0"	4' - 0"	3' - 0"	
C10	LEVEL 2	MASTER	CASEMENT	3' - 0"	4' - 0"	3' - 0"	
C11	LEVEL 2	MASTER	CASEMENT	3' - 0"	4' - 0"	3' - 0"	
F1	LEVEL 2	BED 2	FIXED	3' - 0"	4' - 0"	3' - 0"	
F3	LEVEL 2	BED 1	FIXED	3' - 0"	4' - 0"	3' - 0"	
F4	LEVEL 2	MASTER	FIXED	7' - 0"	2' - 0"	5' - 0"	
F5	LEVEL 2	STAIR	FIXED	5' - 0"	4' - 0"	3' - 0"	
F7	LEVEL 2	BED 2	FIXED	3' - 0"	4' - 0"	3' - 0"	
F10	LEVEL 2	MASTER	FIXED	3' - 0"	4' - 0"	3' - 0"	
F11	LEVEL 2	BED 1	FIXED	7' - 0"	2' - 0"	5' - 0"	

DOOR SCHEDULE UNIT A

MARK	ROOM NAME	TYPE	DIMENSIONS		
			WIDTH	HEIGHT	THICKNESS
LEVEL 1					
100	FOYER	GLASS FLUSH	3' - 0"	7' - 0"	0' - 1 1/2"
102	GARAGE	FLUSH	3' - 0"	6' - 8"	0' - 1 3/4"
103	HALL	SLIDER - CLOSET	4' - 6"	6' - 8"	0' - 1 1/2"
104	HALL	POCKET	2' - 6"	6' - 8"	0' - 1 1/2"
105	LAUNDRY	FLUSH	3' - 0"	6' - 8"	0' - 1 3/4"
106	GARAGE	GARAGE	10' - 0"	7' - 0"	0' - 1 1/2"
107	FOYER	FLUSH	2' - 10"	6' - 8"	0' - 1 3/4"
LEVEL 2					
200	BED 2	FLUSH	3' - 0"	6' - 8"	0' - 1 3/4"
202	BED 1	FLUSH	3' - 0"	6' - 8"	0' - 1 3/4"
203	CLOSET	SLIDER - CLOSET	4' - 6"	6' - 8"	0' - 1 1/2"
204	WC	FLUSH	2' - 10"	6' - 8"	0' - 1 3/4"
205	MASTER	FLUSH	2' - 10"	6' - 8"	0' - 1 3/4"
206	MASTER	FLUSH	2' - 10"	6' - 8"	0' - 1 3/4"
207	MASTER BATH	FLUSH	2' - 10"	6' - 8"	0' - 1 3/4"

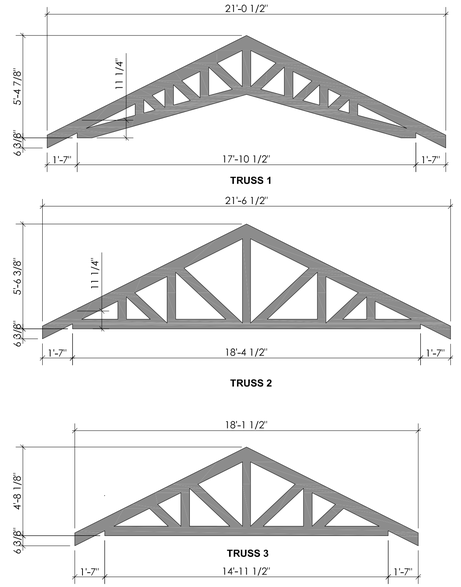

1 TRUSS SCHEDULE
1/4" = 1'-0"

FOR PERMIT 09/28/2018

MARK	DATE	DESCRIPTION

REGISTERED ARCHITECT
PHILIP H. SYDNOR
PORTLAND, OREGON
5822
STATE OF OREGON

TYP. SCHEDULES

PERMIT SET
09/28/2018
SINGLE FAMILY RESIDENCES
1791 BLANKENSHIP ROAD
WEST LINN, OREGON 97068

A5.0

INTEGRATE
ARCHITECTURE & PLANNING
www.integratearch.com
© Integrate Architecture & Planning, p.c.

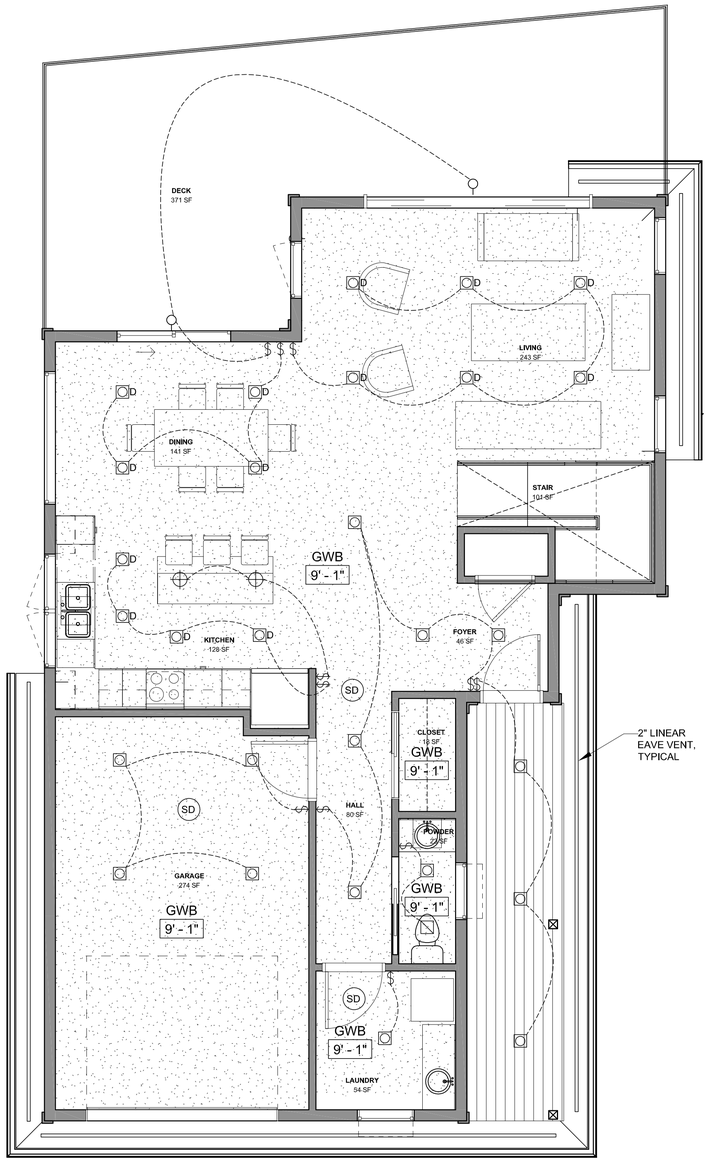

1 ENLARGED RCP - LEVEL 1
1/4" = 1'-0"

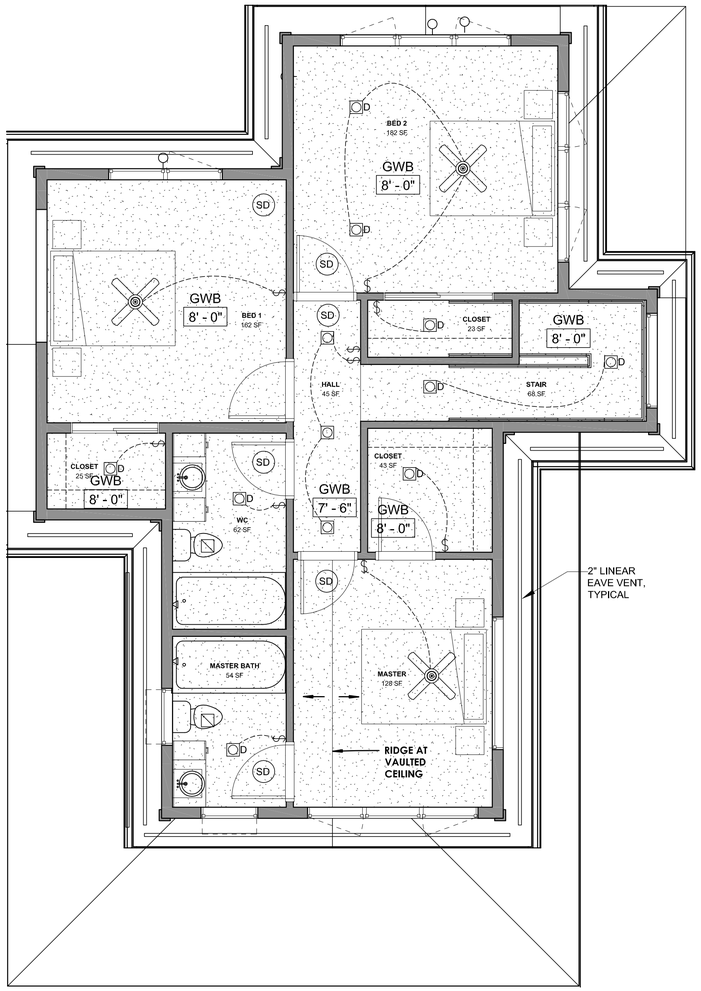

2 ENLARGED RCP - LEVEL 2
1/4" = 1'-0"

GENERAL NOTES

1. ALL CEILINGS ARE GYPSUM BOARD UNLESS OTHERWISE NOTED.
2. OUTLETS SHOWN ARE FOR SWITCHING PURPOSES. ALL OTHER OUTLETS TO BE LOCATED ACCORDING TO OREGON ELECTRICAL CODE. COORDINATE WITH OWNER FOR LOCATIONS.
3. PROVIDE SMOKE DETECTORS AS REQUIRED BY CODE
4. PROVIDE MECHANICAL VENTILATION IN FULL BATHROOMS PER ORSC, M1506.4

LEGEND

CEILING MATERIAL
1t
9'-0"
CEILING TAG
CEILING HEIGHT
GYPSUM BOARD CEILING
T & G CEDAR
RECESSED DOWNLIGHT
RECESSED DIRECTIONAL DOWNLIGHT
D RECESSED DOWNLIGHT, ON DIMMER
PENDANT LIGHT
EXHAUST FAN
FLUSH MOUNT LIGHT
UNDER CABINET LIGHTING
WALL MOUNT VANITY LIGHT
WALL SCONCE - SEE INTERIOR ELEVATION FOR MOUNTING HEIGHT
ELECTRICAL SWITCH
SD SMOKE/ CARBON MONOXIDE DETECTOR
CEILING FAN

FOR PERMIT 09/28/2018

MARK	DATE	DESCRIPTION

REGISTERED ARCHITECT
PHILIP H. SYDNOR
PORTLAND, OREGON
5822
STATE OF OREGON

TYP. REFLECTED CEILING PLANS

PERMIT SET
09/28/2018
SINGLE FAMILY RESIDENCES
1791 BLANKENSHIP ROAD
WEST LINN, OREGON 97068

A6.0

INTEGRATE
ARCHITECTURE & PLANNING
www.integratearch.com
© Integrate Architecture & Planning, p.c.

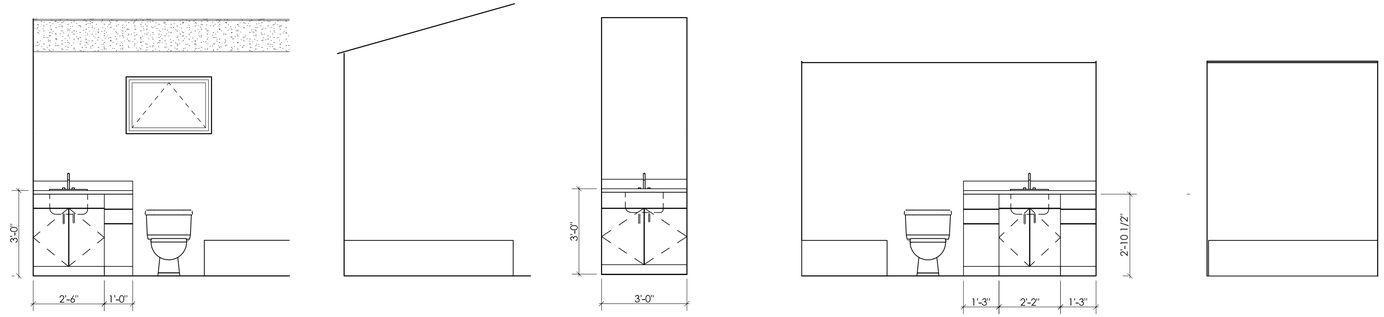

6 MASTER BATH 1
3/8" = 1'-0"

7 MASTER BATH 2
3/8" = 1'-0"

8 POWDER 1
3/8" = 1'-0"

9 WC 1
3/8" = 1'-0"

10 WC 2
3/8" = 1'-0"

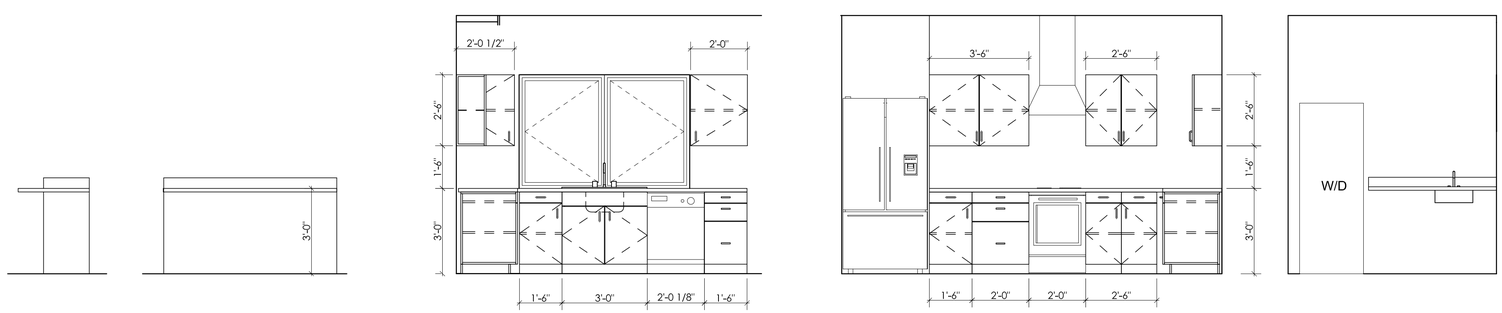

1 ISLAND 1
3/8" = 1'-0"

2 ISLAND 2
3/8" = 1'-0"

3 KITCHEN 1
3/8" = 1'-0"

4 KITCHEN 2
3/8" = 1'-0"

5 LAUNDRY 1
3/8" = 1'-0"

FOR PERMIT 09/28/2018

MARK	DATE	DESCRIPTION

REGISTERED ARCHITECT
PHILIP H. SYDNOR
PORTLAND, OREGON
5822
STATE OF OREGON

TYP. INTERIOR ELEVATIONS

PERMIT SET
09/28/2018
SINGLE FAMILY RESIDENCES
1791 BLANKENSHIP ROAD
WEST LINN, OREGON 97068

A7.0

INTEGRATE
ARCHITECTURE & PLANNING
www.integratearch.com
© Integrate Architecture & Planning, p.c.

STRUCTURAL NOTES

CODE: 2014 O.S.S.C. AND 2014 O.R.S.C.

DESIGN LOADS:

DEAD LOAD	- AS REQUIRED
LIVE LOAD	- 40 PSF
SNOW LOAD	- 25 PSF
SEISMIC	- D1 SEISMIC DESIGN CATEGORY PER O.R.S.C.
WIND:	- ASCE 7 120mph 3-SEC GUST EXP. B
SOIL BEARING	- 1500 PSF ASSUMED

EARTHWORK:

1. EXCAVATE TO LINES & LEVELS SHOWN ON DRAWINGS. ALL FOOTINGS TO BEAR ON FIRM UNDISTURBED NATIVE SANDS

CONCRETE:

1. REFERENCE SPECIFICATION - ACI 301, PLANT MIX PER ASTM C94.
2. STRENGTH:
   A. GROUND FLOOR SLAB - 3,000 PSI AT 28 DAYS
   B. FOOTINGS, WALLS 2,500 PSI @ 28 DAYS
3. REINFORCING - ASTM A615, GRADE 60. LAP BARS AS SHOWN ON PLAN WITH MIN. LAP OF 44 BAR DIAMETERS. PROVIDE 24" HOOKS AT CORNERS.
4. BOLTS:
   A. ANCHOR BOLTS - ASTM A307
   B. EXPANSION BOLTS - HILTI KWIK-BOLT-TZ. SPECIAL INSPECTION REQUIRED.
   C. ADHESIVE ANCHORS - HILTI-RE 500-SD OR SIMPSON SET-XP. SPECIAL INSPECTION REQUIRED.
5. COVER - AS FOLLOWS UNLESS SHOWN OTHERWISE ON PLANS.
   A. CONCRETE PLACED AGAINST EARTH - 3"
   B. FORMED CONCRETE AGAINST EARTH - 2".
   C. SECOND FLOOR SLAB - ¢
6. FINISH - PER ARCHITECT
7. SUBMITTALS: (4 COPIES)
   A. MIX DESIGNS PER IBC 1903
   B. REINFORCING SHOP DRAWINGS

CARPENTRY:

1. REFERENCE SPECIFICATION - IBC CHAPTER 23.
2. LUMBER - DOUGLAS FIR WITH MOISTURE CONTENT PER SPECIFICATION. ALL IN CONTACT WITH CONCRETE TO BE PRESSURE PRESERVATIVE TREATED. GRADE AS FOLLOWS
   A. POSTS AND BEAMS 6X AND GREATER - D.F. NO 1.
   B. POSTS AND BEAMS 4X SMALLER - D.F. NO 2 OR BETTER.
   C. STUDS - D.F. STUD GRADE OR BETTER
   D. PLATES & SILLS - DF NO. 2 P.T. AT CONCRETE SLAB.
      - KILN DRIED D.F. STANDARD TYPICAL
3. SHEATHING - PLYWOOD, ORIENTED STRANDBOARD OR APPROVED EQUAL.
   A. ROOF & WALL SHEATHING - APA 24/0. THICKNESS & NAILING PER PLAN.
   B. FLOOR SHEATHING - APA - 48/24. THICKNESS AND NAILING PER PLAN.
4. PLYWOOD WEB JOISTS- TRUS JOIST TJI SERIES OR APPROVED EQUAL. BRIDGING, BLOCKING & ERECTION BRACING PER MANUFACTURER'S RECOMMENDATION.
5. GLUE LAMINATED BEAMS - DOUGLAS FIR, COMBINATION 24F-V4, FABRICATED WITH WATER PROOF GLUE. FINISH PER PROJECT SPECIFICATIONS.
6. P.T. GLUE LAMINATED BEAMS - EWS 24F-V5MI / SP, FABRICATED WITH WATER PROOF GLUE. FINISH PER PROJECT SPECIFICATIONS.
7. GLUE LAMINATED COLUMNS - DOUGLAS FIR, COMBINATION 24F-V8, FABRICATED WITH WATER PROOF GLUE. FINISH PER PROJECT SPECIFICATIONS.
8. PARALLAM BEAMS - 2.0 E BY TRUS JOIST.
9. TIMBERSTRAND BEAMS - 3-1/2", 1.5E BY TRUS JOIST
10. TIMBERSTRAND BLOCKING - LSL 1-3/4" BY TRUS JOIST.
11. CONNECTIONS - SIMPSON STRONG-TIE OR USP, GALVANIZED.
12. FRAMING - PER INDUSTRY & CODE STANDARDS FOR ALL DETAILS NOT SHOWN. REFER TO IBC SECTIONS 2324, 2325 AND 2326.
13. NAILING - USE COMMON TYPE NAILS. MINIMUM NAILING PER IBC TABLE NO. 23-1-Q UNLESS NOTED OTHERWISE ON PLANS.

COMMON WIRE NAIL	PNEUMATIC NAIL DIAMETER	MINIMUM NAIL LENGTH	NAIL APPLICATION
30D COMMON	0.207"ø P-NAIL	4-1/2"	3X DECKING
40D COMMON	0.225"ø P-NAIL	5"	4X DECKING
20D COMMON	0.192"ø P-NAIL	4"	FRAMING
16D COMMON	0.162"ø P-NAIL	3-1/2"	FRAMING
10D COMMON	0.148"ø P-NAIL	3"	FRAMING
N/A	0.148"ø P-NAIL	2-3/8"	FLR SHEATHING
8D COMMON	0.131"ø P-NAIL	2-1/2"	ROOF SHEATHING
N/A	0.162"ø P-NAIL	3-1/2"	STRAPS

14. DRYING - PRIOR TO INSTALLATION OF GYPSUM WALL BOARD, DRY COMPLETED TO A MAXIMUM MOISTURE CONTENT OF 15%.
15. SUBMITTALS - SHOP DRAWINGS, 4 COPIES.
16. PREFABRICATED WOOD TRUSSES:
   A. REFERENCE STANDARD - ANSI / TPI 1
   B. PERFORMANCE REQUIREMENTS - PROVIDE WOOD TRUSSES DESIGNED AND FABRICATED TO SUPPORT THE LOADS SHOWN WITH A TOTAL LOAD DEFLECTION LESS THAN L/360.
   C. SUBMITTALS: (3 COPIES) STRUCTURAL CALCULATIONS STAMPED BY AN ENGINEER REGISTERED IN OREGON & SHOP DRAWINGS SHOWING ALL FABRICATION, ERECTION AND INSTALLATION DETAILS.
17. UNLESS NOTED OTHERWISE, ALL BEAMS & GIRDER TRUSSES TO BE SUPPORTED AT ENDS BY:
   A. MULTIPLE STUDS EQUAL TO BEAM WIDTH (TRIPLE STUD MIN) WHEN LOCATED IN WALL. CONTINUE ON ALL FLOORS DOWN TO FOUNDATION WITH SOLID BLOCKING AT FLOORS. CONN STUDS TOGETHER WITH 16D @ 12" O.C.
   B. SOLID POST EQUAL TO BEAM WIDTH WHEN FREE STANDING. EXTEND CONTINUOUS FOR FULL HEIGHT DOWN TO SOLID BEARING.

HOLDOWN SCHEDULE

MARK NUMBER	HOLDOWN	BOUNDARY STUDS	ANCHOR THCKN SLAB (6)	ANCHOR EXT. STEM WALL (6)
-	NO HOLDOWN REQ'D			
1.	HDU2	(2)2x	S6TB16	S6TB20
2.	HDU4	(2)2x	S6TB16	S6TB20
3.	HDU5	(2)2x	S6TB24	S6TB24
4.	HDU8	(3)2x	S6TB34	S6TB34
5.	HDU11	(1)6x	N/A	SB1x30 @ HDU11
6.	HDU14	(1)6x	N/A	SB1x30
7.	MSTC28	(2)2x	N/A	N/A
8.	MSTC40	(2)2x	N/A	N/A
9.	MSTC66	(2)2x	N/A	N/A
10.	2-MSTC66	(4)2x	N/A	N/A

NOTES:

1. INSTALL ALL HOLDOWNS PER MANUFACTURER SPECIFICATION PER C-C-2015 SIMPSON STRONG TIE CATALOG OR USP 34TH EDITION CATALOG.
2. MATCH STUDS ON SCHEDULE FOR WALLS BELOW ON ALL WALL TO WALL HOLDOWNS.
3. (2)2x OR (3)2x STUDS NAILED TOGETHER WITH (2) ROWS OF 16D @ 3" O.C. STAGGERED.
4. REFER TO SHEARWALL SCHEDULE AND TYPICAL SHEARWALL DETAILS FOR WALL LOCATIONS AND CONFIGURATIONS.
5. REFER TO SIMPSON OR USP CATALOGS FOR MINIMUM EMBED OF ANCHORS INTO CONCRETE.
6. USE S6TBL MODELS @ 3x SILL LOCATIONS.

SHEAR WALL SCHEDULE(1-13)

MARK	REF NOTES: (1,9) SHEATHING	Note: (2) NAIL SIZE	EDGE NAIL'G SPACING	FIELD NAIL'G SPACING	SILL TO CONCRETE CONNECTION, NOTE: (3)	SILL TO WOOD CONNECTION, Note (7)	SHEAR TRANSFER CLIPS (8)
A	7/16" OSB (1) SIDE (6)	8d	6"	12"	5/8" DIA. A.B. @ 48" O/C	16D @ 6" O/C	A35 OR RBC @ 24" O/C
B	7/16" OSB (1) SIDE (6)	8d	4"	12"	5/8" DIA. A.B. @ 36" O/C (12)	16D @ 4" O/C	A35 OR RBC @ 18" O/C
C	7/16" OSB (1) SIDE (5,6)	8d	3"	12"	5/8" DIA. A.B. @ 30" O/C (12)	16D @ 3" O/C	A35 OR RBC @ 12" O/C
D	7/16" OSB (1) SIDE (5,6)	8d	2"	12"	5/8" DIA. A.B. @ 24" O/C (12)	16D @ 2" O/C	A35 OR RBC @ 10" O/C.
E	7/16" OSB (2) SIDES (4,5,6)	8d	4" STAGGERED	12"	5/8" DIA. A.B. @ 18" O/C (12)	16D @ 2" O/C	A35 OR RBC @ 7" O/C
F	7/16" OSB (2) SIDES (4,5,6)	8d	3" STAGGERED	12"	5/8" DIA. A.B. @ 15" O/C (12)	16D @ 3" O/C/2 ROWS STAGGERED	A35 OR RBC @ 5" O/C
G	7/16" OSB (2) SIDES (4,5,6)	8d	2" STAGGERED	12"	5/8" DIA. A.B. @ 12" O/C (12)	16D @ 2" O/C/2 ROWS STAGGERED	HGA10KT @ 7" O/C

NOTES:

1) C-D, D-C SHEATHING, PLYWOOD PANEL SIDING AND OTHER GRADES COVERED IN PS1-95. ALL WALL CONSTRUCTION TO CONFORM TO OSSC TABLE 2306.4.1.
2) USE COMMON WIRE NAILS FOR ALL WOOD SHEATHING AND COOLER NAILS FOR GYPBOARD SHEATHING.
3) A.B. MINIMUM 7" EMBED INTO CONCRETE. 3"X3"X¼" PLATE WASHERS REQ'D AT ALL SHEAR WALL A.B.'s. N/A @ MASA ANCHORS.
4) PANEL JOINTS SHALL BE OFFSET TO FALL ON DIFFERENT FRAMING MEMBERS OR FRAMING SHALL BE 3X OR THICKER AND NAILS ON EACH SIDE SHALL BE STAGGERED.
5) 3X OR DBL 2X FRAMING AT ALL ADJOINING PANEL EDGES AND NAILS SHALL BE STAGGERED.
6) ALL EDGES BLOCKED.
7) COMMON WIRE NAILS.
8) CLIP TO BE ATTACHED FROM CONTINUOUS BLOCKING TO TOP OF CONTINUOUS TOP PLATES. CLIPS ARE NOT REQUIRED AT GYP BD WALLS BUT BLOCKING IS ATTACHED PER THE TOENAILING SCHEDULE.
9) SEE ATTACHED TYPICAL SHEARWALL DETAILS.
10) SHEATHING TO BE STRUCTURAL I SHEATHING.
11) VALUES ARE FOR FRAMING OF H-F.
12) SEE PLAN FOR WALLS WHERE SEISMIC DESIGN SHEAR IS GREATER THAN 350 PLF (ASD). 3X OR DBL 2X AT PANEL EDGES AND SILL. STAGGER NAILS. NAIL AND GLUE DBL 2X SILL TOGETHER W/ 10D GALVANIZED @ 4" O/C STAGGERED, OR USE A 3X. FOR WALLS WITH THE LARGER SILLS, ANCHOR BOLT SPACING MAY BE INCREASED BY A FACTOR OF 1.25 FROM THE TABLE ABOVE DUE TO THICKER SILLS.
13) 7/16" PLY IS ACCEPTABLE IN LIEU OF 7/16" OSB.

FOR PERMIT 09/28/2018

REGISTERED PROFESSIONAL ENGINEER
51319PE
OREGON
JAN. 12, 1995
DAVID J. HORN

Expires: 6-30-19

HCE
Horn Consulting Engineers, LLC
9320 SW Barbur Blvd. Ste 235 Portland, OR 97219
Phone: 503.892.5782 Email: dave@hornce.com

DISCLAIMER: THE SIGNATURE AND STAMP FOR THESE STRUCTURAL DRAWINGS ARE VALID ONLY WHEN ACCOMPANIED BY A DOCUMENTED AND SIGNED SET OF STRUCTURAL CALCULATIONS PREPARED BY HORN CONSULTING ENGINEERS LLC AND SEALED WITH A WET STAMP AND SIGNATURE BY THE ENGINEER WHOSE STAMP APPEARS ON THIS SHEET. CONSTRUCTION SHALL BE PERFORMED ONLY WITH A DRAWING SET APPROVED BY THE LOCAL JURISDICTION.

PARCEL 2
1791 BLANKENSHIP RD
WEST LINN, OR 97068

SHEAR WALL & HOLDOWN SCHEDULES / STRUCTURAL NOTES

REVISIONS:	
DATE:	8.14.18
SCALE:	
DRAWN:	LY
JOB NO:	1A-18-02

S0

ORIGINAL SHEET SIZE: 22x34

1 / S1.1 FOUNDATION / MAIN FLOOR FRAMING PLAN

SCALE: 1/4"=1'-0"

LEGEND

- INDICATES WALL ABOVE FRAMING LEVEL
- INDICATES WALL BELOW FRAMING LEVEL
- INDICATES INTERIOR BEARING WALL BELOW FRAMING LEVEL
- INDICATES COLUMN ABOVE
- INDICATES COLUMN BELOW FRAMING LEVEL
- INDICATES DETAIL REFERENCE APPLIES TO ALL SIMILAR LOCATIONS
- HDUx (x) HOLDOWN TYPE & SCHEDULE MARK NUMBER (x) ON SHT S0

FOR PERMIT 09/28/2018

REGISTERED PROFESSIONAL ENGINEER 51319PE OREGON JAN. 12, 1999 DAVID J. HORN

Expires: 6-30-19

HCE
Horn Consulting Engineers LLC
9320 SW Barbur Blvd, Ste 135 Portland, OR 97219
Phone: 503.892.5782 Email: dave@hornce.com

DISCLAIMER: THE SIGNATURE AND STAMP FOR THESE STRUCTURAL DRAWINGS ARE VALID ONLY WHEN ACCOMPANIED BY A DEVELOPMENT AND LOT SPECIFIC SET OF STRUCTURAL CALCULATIONS PREPARED BY HORN CONSULTING ENGINEERS LLC AND SEALED WITH A WET STAMP AND SIGNATURE BY THE ENGINEER WHOSE STAMP APPEARS ON THIS SHEET. CONSTRUCTION SHALL BE PERFORMED ONLY WITH A DRAWING SET APPROVED BY THE LOCAL JURISDICTION.

PARCEL 2
1791 BLANKENSHIP RD
WEST LINN, OR 97068

FOUNDATION / MAIN FLOOR FRAMING PLAN

REVISIONS:

DATE:	8.14.18
SCALE:	1/4" = 1'-0"
DRAWN:	LY
JOB NO:	1A-18-02

S1.1

ORIGINAL SHEET SIZE: 22x34

LEGEND

- INDICATES ROOF OVERFRAMING
- INDICATES WALL BELOW FRAMING LEVEL
- INDICATES INTERIOR BEARING WALL BELOW FRAMING LEVEL
- INDICATES COLUMN BELOW FRAMING LEVEL
- INDICATES DETAIL REFERENCE APPLIES TO ALL SIMILAR LOCATIONS
- INDICATES VAULTED AREA
- EXTENT OF SHEARWALL SHEATHING SEGMENT
- INDICATES SHEARWALL TYPE PER SCHEDULE SHT S0
- INDICATES HOLDOWN TYPE. 1 @ EA END OF WALL SEGMENT PER SCHEDULE SHT S0

TRUSS NOTES:

- ALL TRUSSES TO BE PRE-ENGINEERED & CARRY MANUFACTURER'S STAMP.
- ALL TRUSSES SHALL BE INSTALLED & BRACED TO MANUFACTURER'S SPECIFICATIONS.
- NON-BEARING WALLS SHALL BE CONNECTED TO THE TRUSS BOTTOM CHORD W/ SIMPSON STC (OR EQ.) TO INSURE THAT THE TRUSS BOTTOM CHORD WILL NOT BEAR ON THE WALL.
- ALL CONNECTIONS WITH RAFTERS, MONO OR JACK TRUSSES & HIP TRUSSES TO MAIN GIRDER TO BE PROVIDED BY THE TRUSS MANUFACTURER.
- TRUSS LAYOUT SHOWING GIRDER TRUSS LOCATIONS ARE NOT PERMITTED TO CHANGE & MUST BE FOLLOWED CORRECTLY. IF TRUSS MANUFACTURER REQUESTS TO CHANGE IN PART OR IN WHOLE THE LAYOUT DESIGNED HEREIN, HE/SHE MUST CONTACT THE DESIGNER TO INSURE STRUCTURAL DESIGN IS MAINTAINED ON THE BUILDING CORRECTLY. ALSO, IF THE DESIGN LAYOUT IS DETERMINED TO CHANGE, THE BUILDING DEPARTMENT WILL REQUIRE APPROVAL & NEW ENGINEERING CALC'S.
- ADD SOLID BLK'G BETWEEN JOISTS UNDER POINT LOADS ABV. - WHERE APPLICABLE AT WLL.
- PROVIDE SOLID BEARING UNDER GIRDER TRUSS ENDS & FROM BEARING POINTS UNDER STRUCTURAL ROOF BEAMS AS SHOWN ON PLANS.
- PROVIDE SOLID BEARING UNDER BEAM ENDS & FROM BRG. POINTS TRANSFERRED DOWN FROM FLOOR ABV. CONT. TO FTG. BLW AS LOCATED ON PLANS.

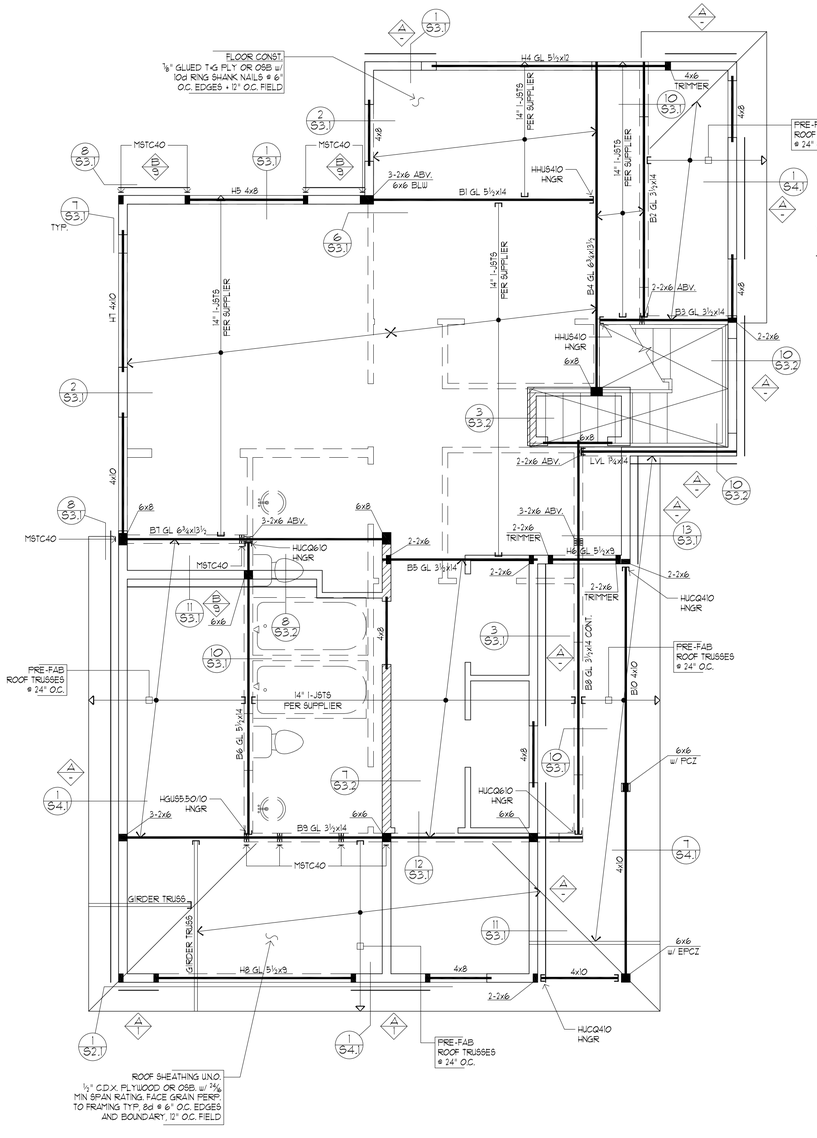

1 S1.2 UPPER FLOOR FRAMING / MAIN FLOOR SHEAR WALL PLAN

SCALE: 1/4"=1'-0"

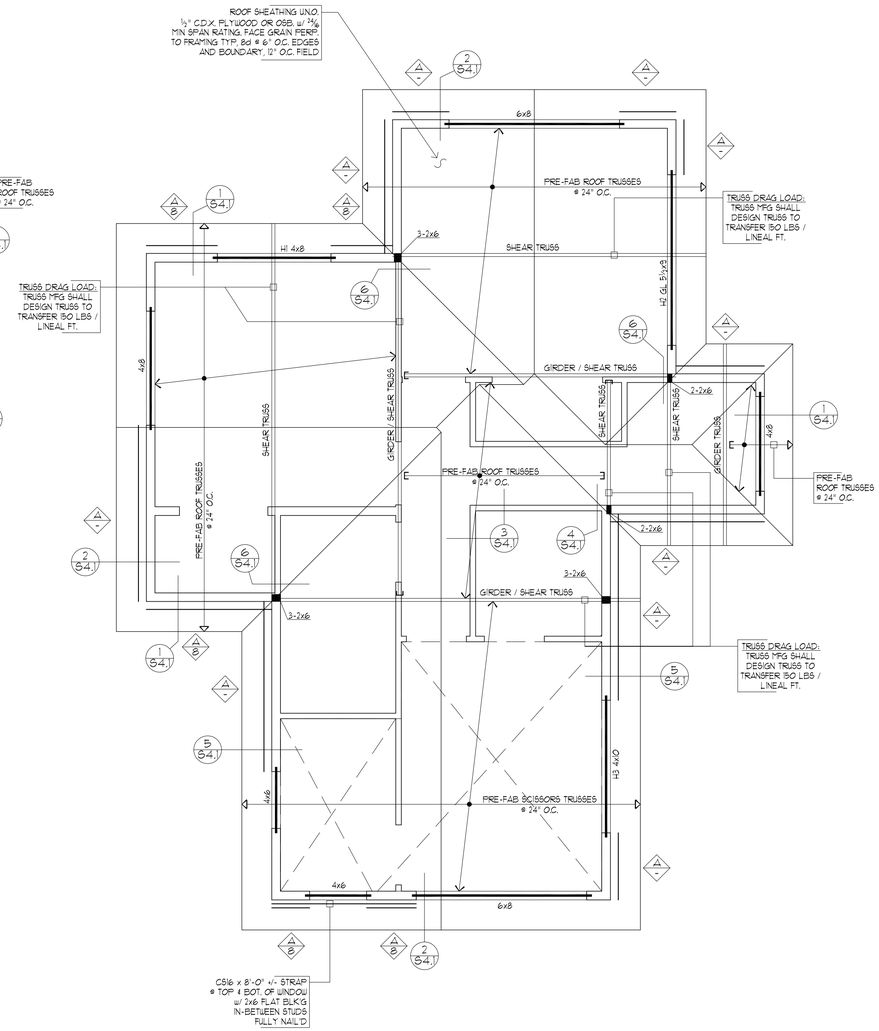

2 S1.2 ROOF FRAMING / UPPER FLOOR SHEAR WALL PLAN

SCALE: 1/4"=1'-0"

FOR PERMIT 09/28/2018

REGISTERED PROFESSIONAL ENGINEER
51319PE
OREGON
JAN. 12, 1995
DAVID J. HORN
Expires: 6-30-19

HCE
Horn Consulting Engineers LLC
9320 SW Barbur Blvd. Ste 235 Portland, OR 97219
Phone: 503.892.5782 Email: dave@hornce.com

DISCLAIMER: THE SIGNATURE AND STAMP FOR THESE STRUCTURAL DRAWINGS ARE VALID ONLY WHEN ACCOMPANIED BY A DEVELOPMENT AND SITE SPECIFIC SET OF STRUCTURAL CALCULATIONS PREPARED BY HORN CONSULTING ENGINEERS LLC AND SEALED WITH A WET STAMP AND SIGNATURE BY THE ENGINEER WHOSE STAMP APPEARS ON THIS SHEET. CONSTRUCTION SHALL BE PERFORMED ONLY WITH A DRAWING SET APPROVED BY THE LOCAL JURISDICTION.

PARCEL 2
1191 BLANKENSHIP RD
WEST LINN, OR 97068

UPPER FLOOR FRAMING / MAIN FLOOR SHEAR WALL / ROOF FRAMING / UPPER FLOOR SHEAR WALL PLANS

REVISIONS:	
DATE:	8.14.18
SCALE:	¼" = 1'-0"
DRAWN:	LY
JOB NO:	1A-18-02

S1.2

ORIGINAL SHEET SIZE: 22x34

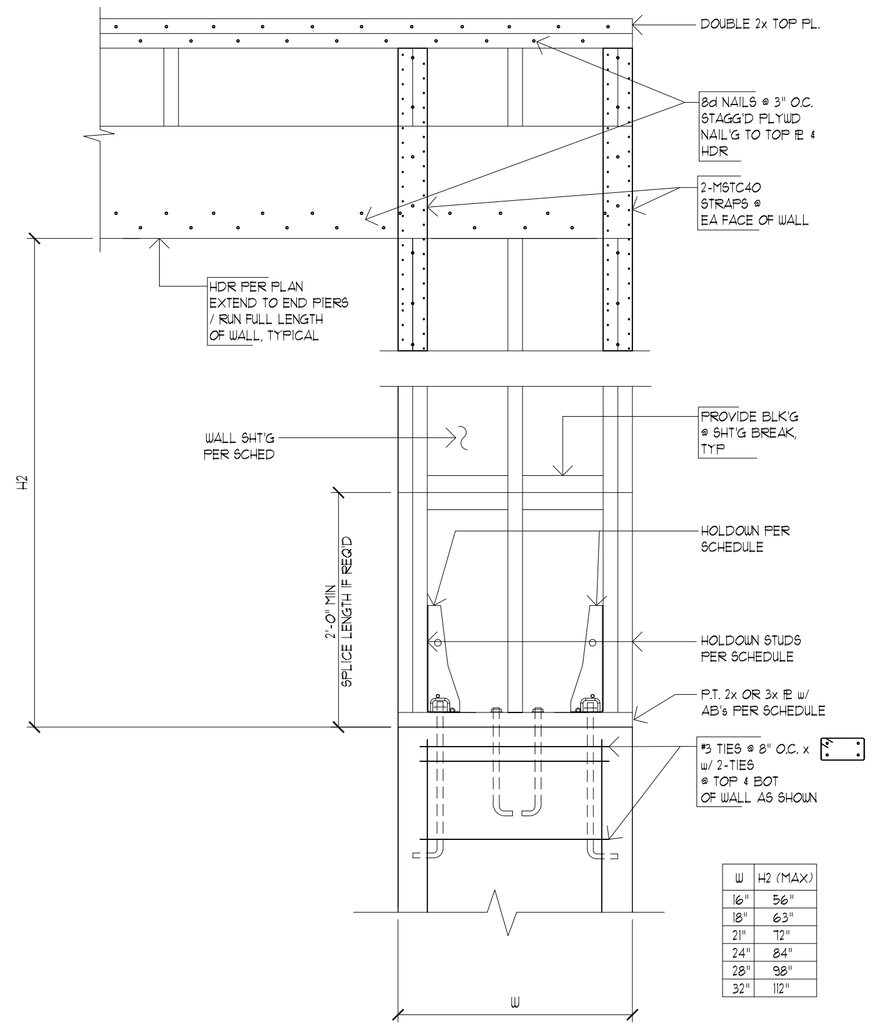

7 GARAGE WING FRAMING (LOW HEADER)

SCALE: 1"=1'-0"

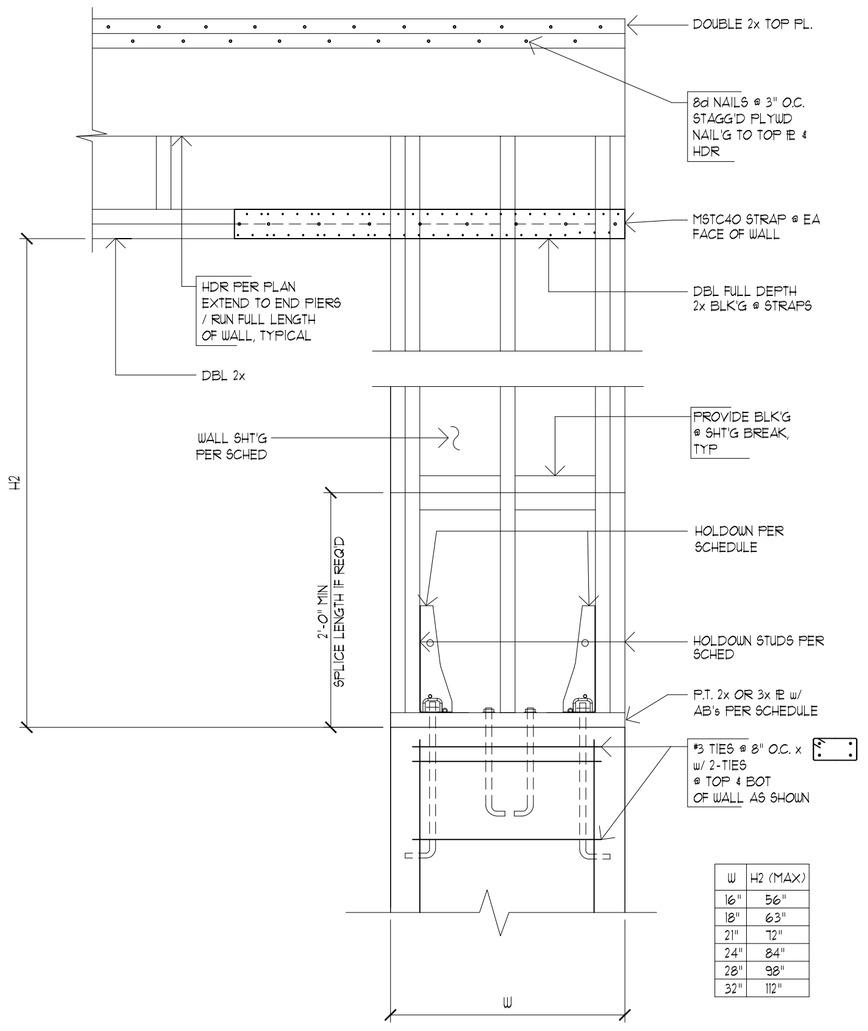

GARAGE WING FRAMING (RAISED HEADER)

SCALE: 1"=1'-0"

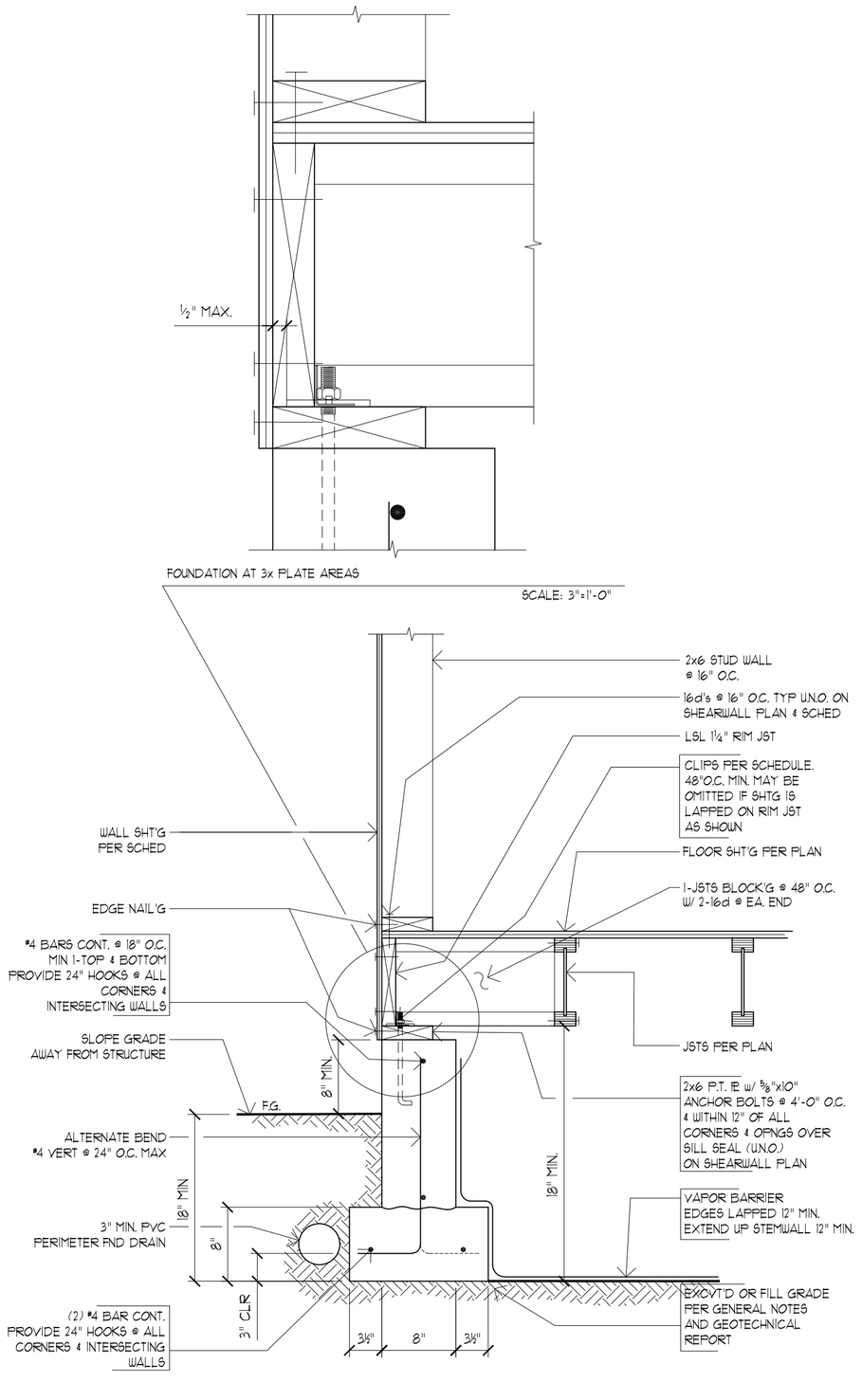

2 FOUNDATION @ 2 STORY STRUCTURE W/ PARALLEL JSTS

NOTE: ENGINEERED CONC. WALL REQ. IF BACKFILL AGAINST WALL EXCEEDS 48" IN HEIGHT

SCALE: 1"=1'-0"

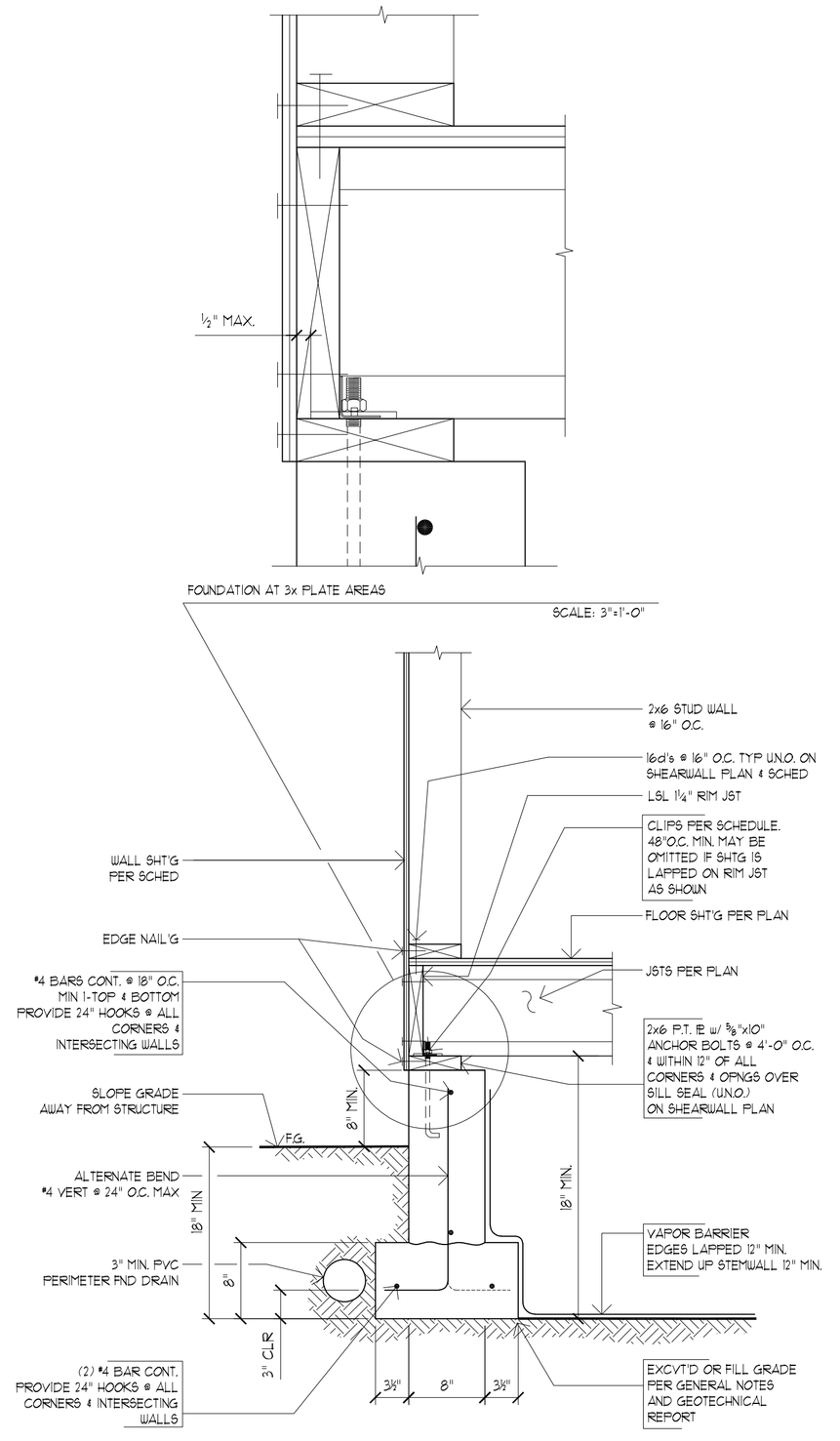

3 FOUNDATION @ 2 STORY STRUCTURE W/ PERP JSTS

NOTE: ENGINEERED CONC. WALL REQ. IF BACKFILL AGAINST WALL EXCEEDS 48" IN HEIGHT

SCALE: 1"=1'-0"

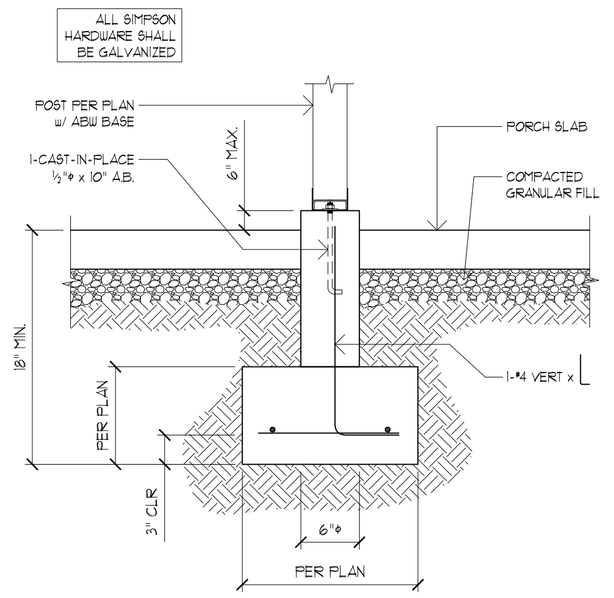

4 FRONT PORCH POST / FTG

SCALE: 1"=1'-0"

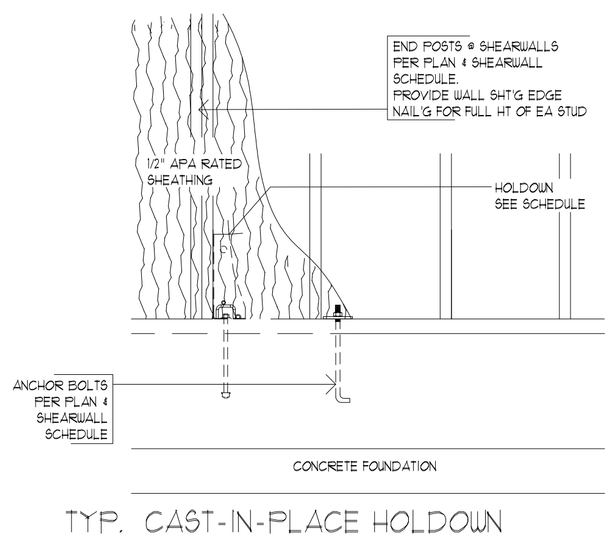

5 TYP. CAST-IN-PLACE HOLDOWN @ STEM WALL

SCALE: 1"=1'-0"

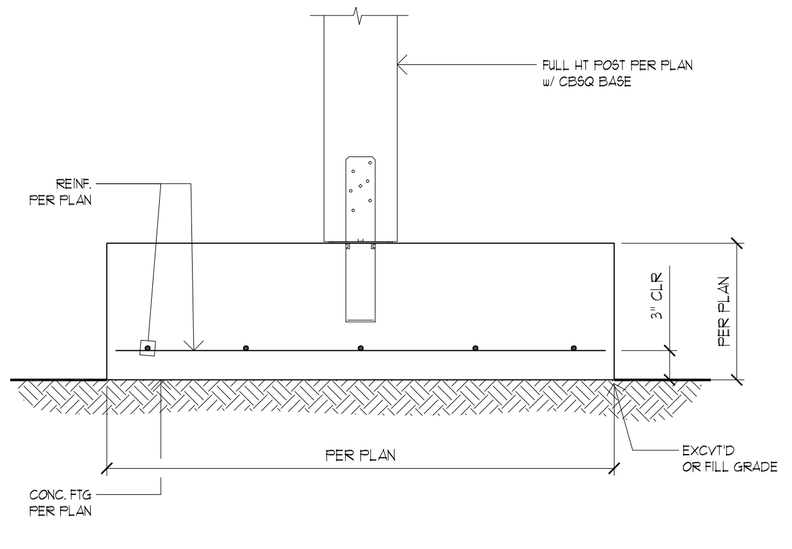

6 POST CONNECTION @ FOOTING

SCALE: 1"=1'-0"

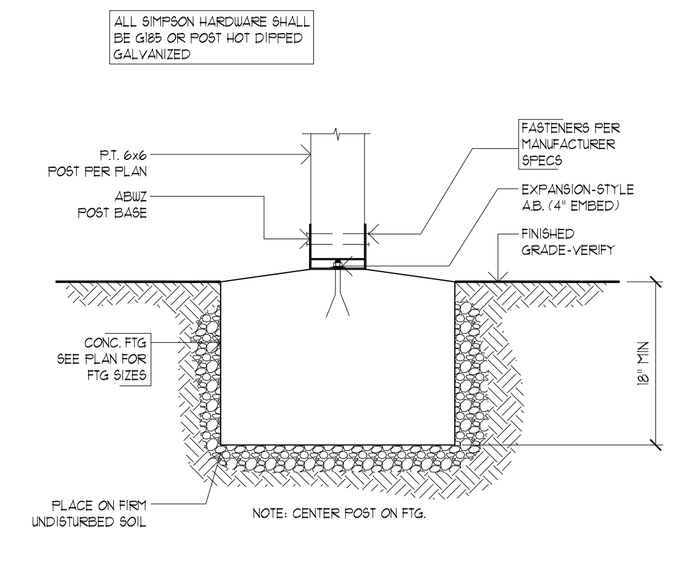

7 FOOTING DETAIL

SCALE: N.T.S.

FOR PERMIT 09/28/2018

REGISTERED PROFESSIONAL ENGINEER
51319PE
OREGON
JAN. 12, 1995
DAVID J. HORN
Expires: 6-30-19

HCE
Horn Consulting Engineers LLC
9320 SW Barbur Blvd. Ste 235 Portland, OR 97219
Phone: 503.892.5782 Email: dave@hornce.com

DISCLAIMER: THE SIGNATURE AND STAMP FOR THESE STRUCTURAL DRAWINGS ARE VALID ONLY WHEN ACCOMPANIED BY A DEVELOPMENT AND SITE SPECIFIC SET OF STRUCTURAL CALCULATIONS PREPARED BY HORN CONSULTING ENGINEERS LLC AND SEALED WITH A WET STAMP AND SIGNATURE BY THE ENGINEER WHOSE STAMP APPEARS ON THIS SHEET. CONSTRUCTION SHALL BE PERFORMED ONLY WITH A DRAWING SET APPROVED BY THE LOCAL JURISDICTION.

PARCEL 2
1791 BLANKENSHIP RD
WEST LINN, OR 97068

DETAILS

REVISIONS:

DATE:	8.14.18
SCALE:	1" = 1'-0"
DRAWN:	LY
JOB NO:	1A-18-02

S2.1

ORIGINAL SHEET SIZE: 22x34

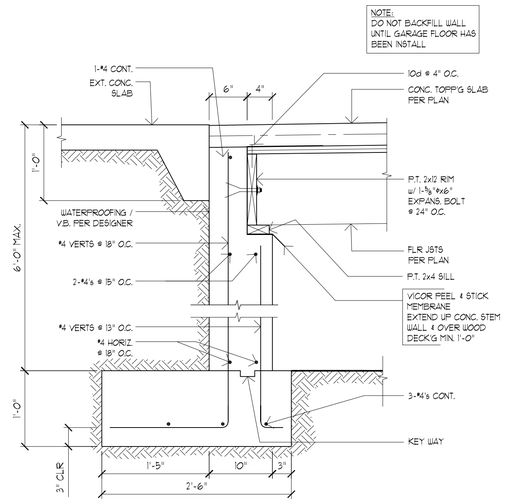

1 SUSPENDED GARAGE JSTS / RETAIN. WALL

SCALE: 1"=1'-0"

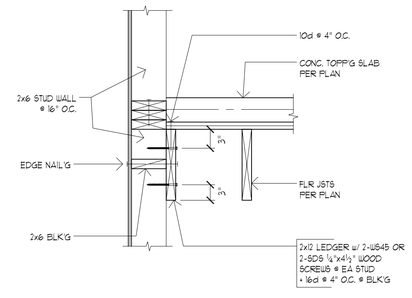

2 PARALLEL 2x12 FLR JSTS / WALL

SCALE: 1"=1'-0"

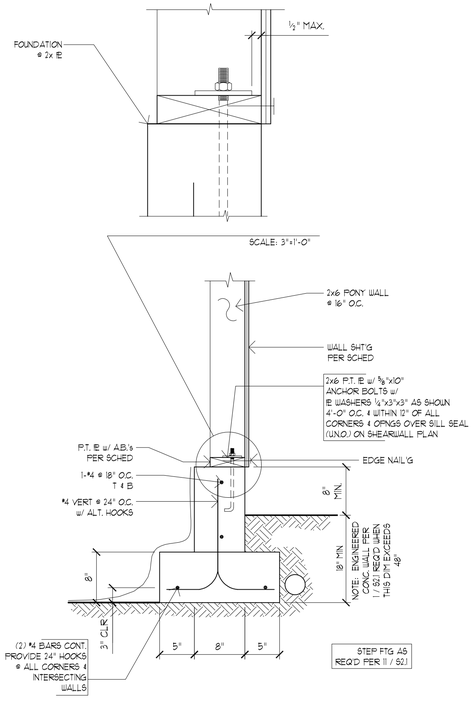

3 FOUNDATION / PONY WALL

SCALE: 1"=1'-0"

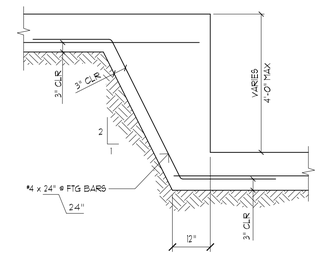

4 TYP FOOTING STEP

SCALE: 1" = 1'-0"

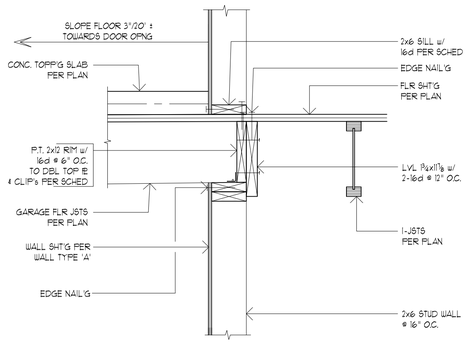

5 GARAGE JSTS / CRIPPLE WALL

SCALE: 1"=1'-0"

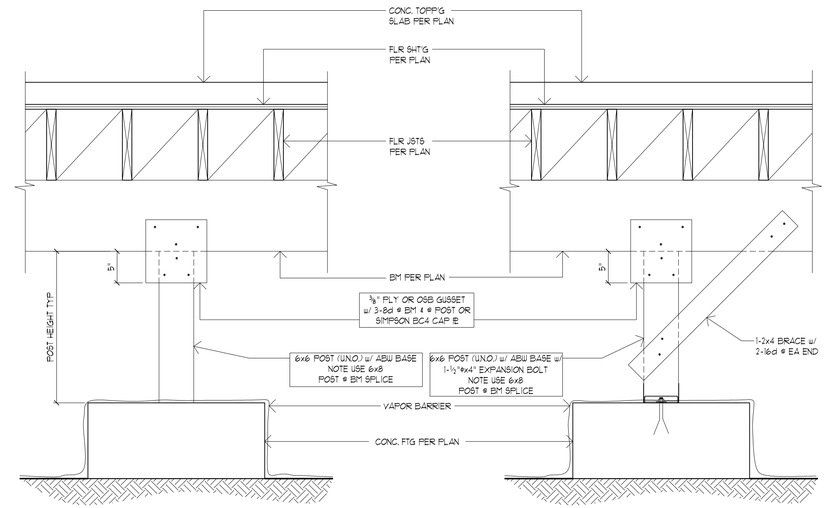

POST 4'-0" OR LESS

POST > 4'-0" < 8'-0"

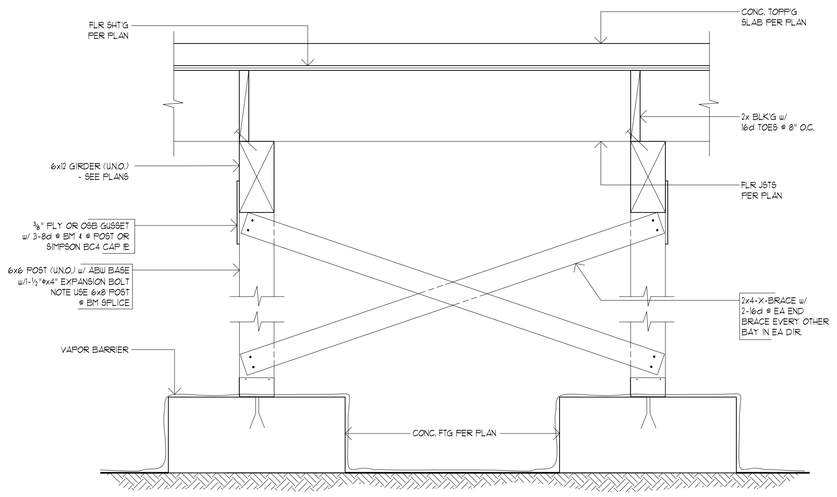

POST > 8'-0" < 14'-0"

6 CRAWL SPACE POST TO BEAM POSITIVE CONNECTION

SCALE: 1"=1'-0"

FOR PERMIT 09/28/2018

REGISTERED PROFESSIONAL ENGINEER
51319PE
OREGON
JAN. 12, 1995
DAVID J. HORN
Expires: 6-30-19

HCE
Horn Consulting Engineers, LLC
9320 SW Barbur Blvd. Ste 235 Portland, OR 97219
Phone: 503.892.5782 Email: dave@hornce.com

DISCLAIMER: THE SIGNATURE AND STAMP FOR THESE STRUCTURAL DRAWINGS ARE VALID ONLY WHEN ACCOMPANIED BY A DEVELOPMENT AND SITE SPECIFIC SET OF STRUCTURAL CALCULATIONS PREPARED BY HORN CONSULTING ENGINEERS LLC AND SEALED WITH A WET STAMP AND SIGNATURE BY THE ENGINEER WHOSE STAMP APPEARS ON THIS SHEET. CONSTRUCTION SHALL BE PERFORMED ONLY WITH A DRAWING SET APPROVED BY THE LOCAL JURISDICTION.

PARCEL 2
1191 BLANKENSHIP RD
WEST LINN, OR 97068

DETAILS

REVISIONS:

DATE:	8.14.18
SCALE:	1" = 1'-0"
DRAWN:	LY
JOB NO:	1A-18-02

S2.2

ORIGINAL SHEET SIZE: 22x34

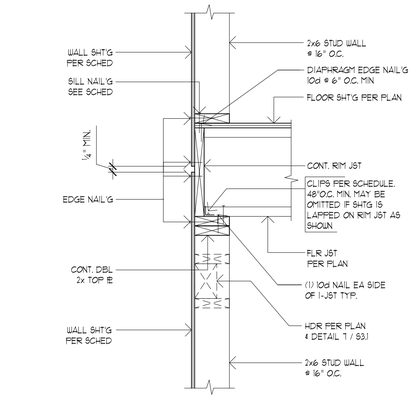

1 PERP. TJI FLR JSTS TO STUD WALL

SCALE: 1"=1'-0"

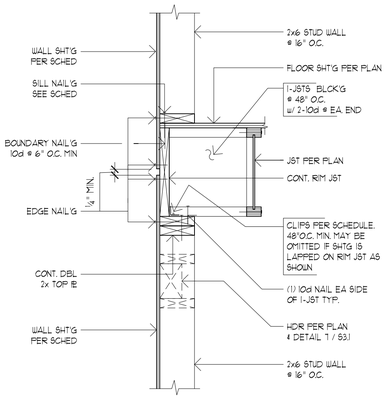

2 PARALLEL TJI FLR JSTS TO STUD WALL

SCALE: 1"=1'-0"

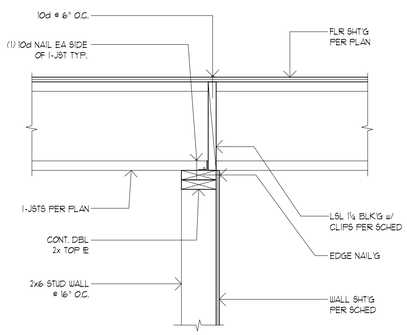

3 TYP. FLOOR TO SHEAR WALL CONN.

SCALE: 1"=1'-0"

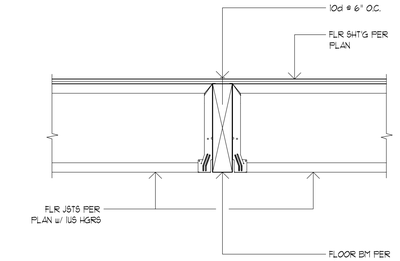

4 TYP. FLR JSTS TO FLUSH BM

SCALE: 1"=1'-0"

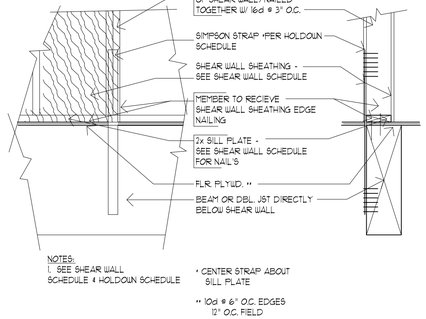

5 TIE STRAP @ BEAM

SCALE: 1"=1'-0"

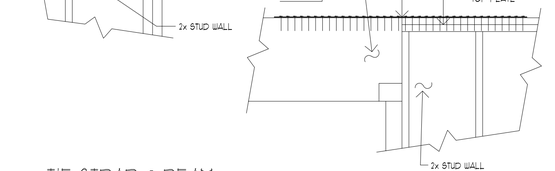

6 TIE STRAP @ BEAM

SCALE: 1"=1'-0"

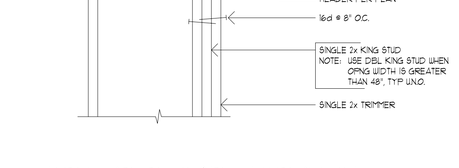

7 TYP HEADER TO SIDE JAMB (U.N.O.)

SCALE: 1"=1'-0"

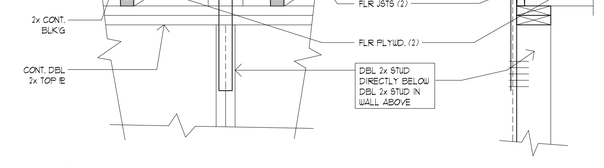

8 TIE STRAP HOLDOWN

SCALE: 1"=1'-0"

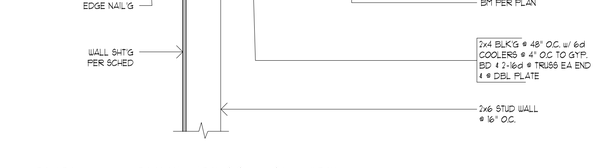

9 PARALLEL ROOF TRUSS @ SHEARWALL

SCALE: 1"=1'-0"

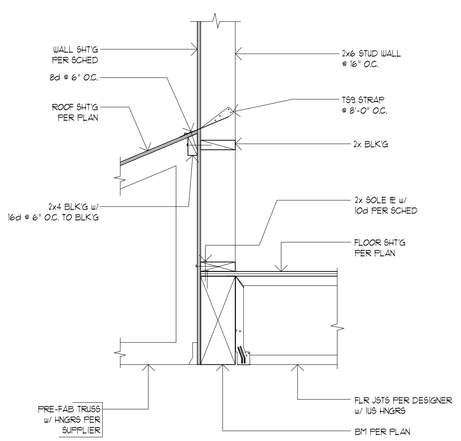

10 SHEARWALL @ BM / JST / TRUSSES

SCALE: 1"=1'-0"

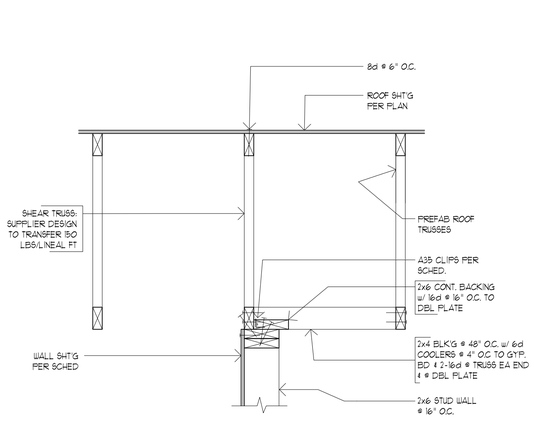

11 PARALLEL ROOF TRUSS @ SHEARWALL

SCALE: 1"=1'-0"

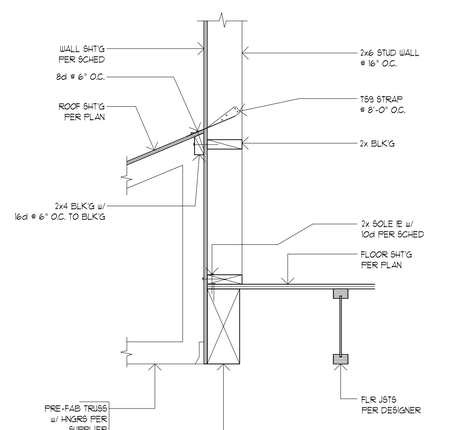

12 SHEARWALL @ BM / JST / TRUSSES

SCALE: 1"=1'-0"

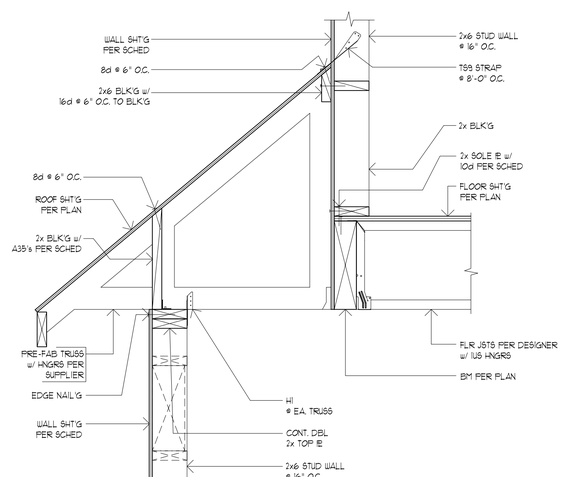

13 SHEARWALL @ BM / JST / TRUSSES

SCALE: 1"=1'-0"

FOR PERMIT 09/28/2018

REGISTERED PROFESSIONAL ENGINEER
51319PE
JAN. 12, 1995
OREGON
DAVID J. HORN
Expires: 6-30-19

HCE
Horn Consulting Engineers LLC
9320 SW Barbur Blvd. Ste 235 Portland, OR 97219
Phone: 503.892.5782 Email: dave@hornce.com

DISCLAIMER: THE SIGNATURE AND STAMP FOR THESE STRUCTURAL DRAWINGS ARE VALID ONLY WHEN ACCOMPANIED BY A DEVELOPMENT AND SITE SPECIFIC SET OF STRUCTURAL CALCULATIONS PREPARED BY HORN CONSULTING ENGINEERS LLC AND SEALED WITH A WET STAMP AND SIGNATURE BY THE ENGINEER WHOSE STAMP APPEARS ON THIS SHEET. CONSTRUCTION SHALL BE PERFORMED ONLY WITH A DRAWING SET APPROVED BY THE LOCAL JURISDICTION.

PARCEL 2
1791 BLANKENSHIP RD
WEST LINN, OR 97068

DETAILS

REVISIONS:	
DATE:	8.14.18
SCALE:	1" = 1'-0"
DRAWN:	LY
JOB NO:	1A-18-02

S3.1

ORIGINAL SHEET SIZE: 22x34

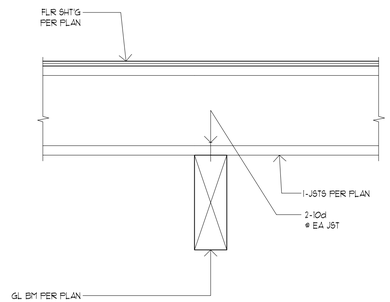

1 TYP. FLOOR TO BM

SCALE: 1"=1'-0"

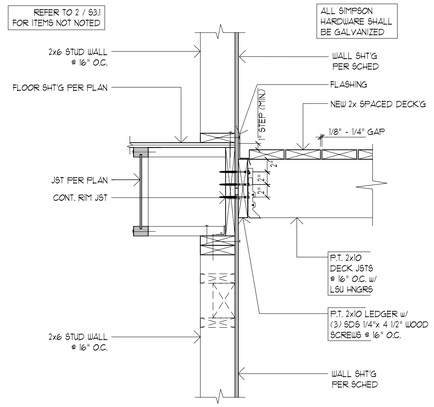

2 DECK LEDGER @ WALL

SCALE: 1"=1'-0"

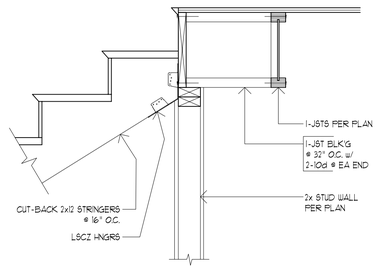

3 STAIR STRINGER / BM

SCALE: 1"=1'-0"

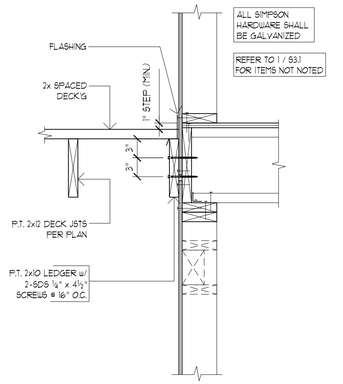

4 DECK LEDGER @ WALL

SCALE: 1"=1'-0"

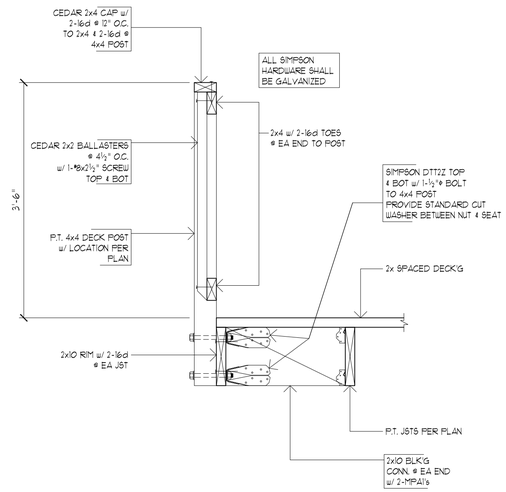

5 DECK POST @ JSTS / DECK'G

SCALE: 1"=1'-0"

6 DECK POST @ JSTS / DECK'G

SCALE: 1"=1'-0"

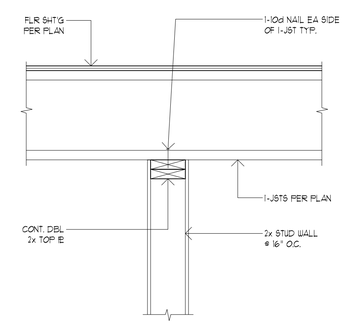

7 TYP. FLOOR TO BRG WALL CONN.

SCALE: 1"=1'-0"

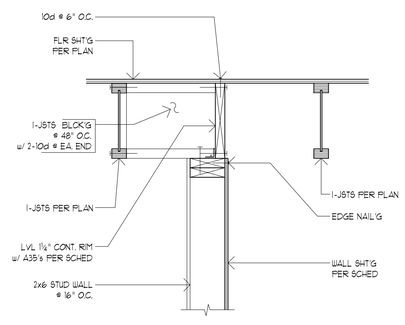

8 TYP. FLOOR TO BRG WALL CONN.

SCALE: 1"=1'-0"

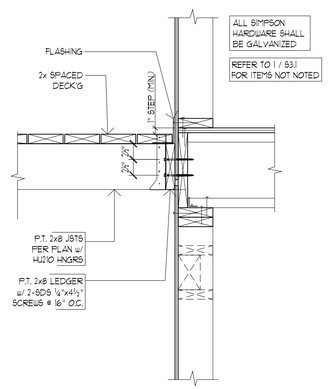

9 DECK LEDGER @ WALL

SCALE: 1"=1'-0"

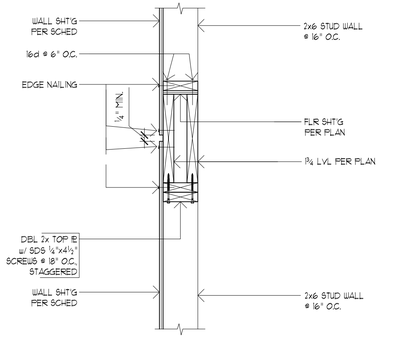

10 STUD WALLS @ STAIR OPENING

SCALE: 1"=1'-0"

FOR PERMIT 09/28/2018

REGISTERED PROFESSIONAL ENGINEER
51319PE
OREGON
JAN. 12, 1995
DAVID J. HORN
Expires: 6-30-19

HCE
Horn Consulting Engineers, LLC
9320 SW Barbur Blvd, Ste 125 Portland, OR 97219
Phone: 503.892.5782 Email: dave@hornce.com

DISCLAIMER: THE SIGNATURE AND STAMP FOR THESE STRUCTURAL DRAWINGS ARE VALID ONLY WHEN ACCOMPANIED BY A DEVELOPMENT AND LOT SPECIFIC SET OF STRUCTURAL CALCULATIONS PREPARED BY HORN CONSULTING ENGINEERS LLC AND SEALED WITH A WET STAMP AND SIGNATURE BY THE ENGINEER WHOSE STAMP APPEARS ON THIS SHEET. CONSTRUCTION SHALL BE PERFORMED ONLY WITH A DRAWING SET APPROVED BY THE LOCAL JURISDICTION.

PARCEL 2
1791 BLANKENSHIP RD
WEST LINN, OR 97068

DETAILS

REVISIONS:

DATE:	8.14.18
SCALE:	1" = 1'-0"
DRAWN:	LY
JOB NO:	1A-18-02

S3.2

ORIGINAL SHEET SIZE: 22x34

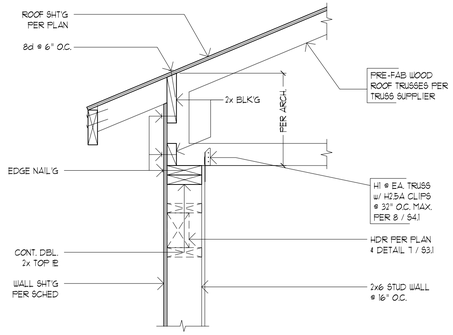

1 PERP. TRUSSES / EXT. WALL

SCALE: 1"=1'-0"

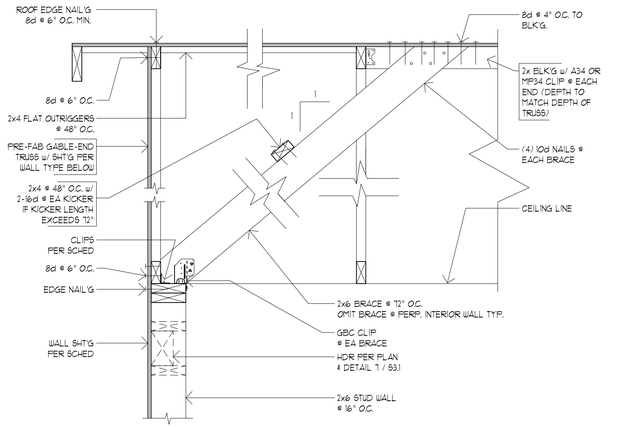

2 PARALLEL TRUSSES TO WALL

SCALE: 1"=1'-0"

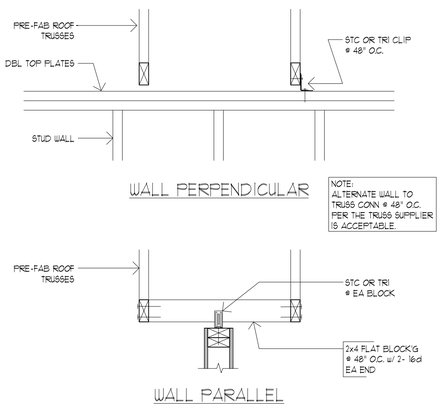

3 TYP. NON-STRUCT. STUD WALL ROOF TRUSS CONN.

SCALE: 1"=1'-0"

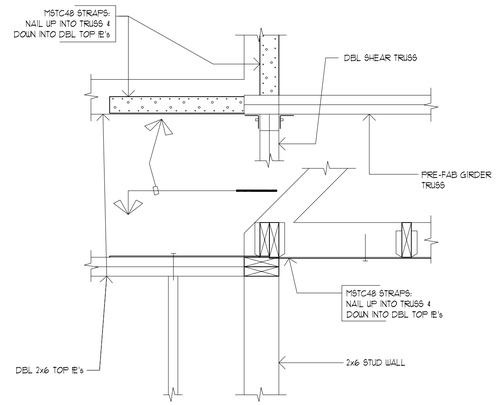

4 GIRDER @ WALL CORNER / SHEAR TRUSS DRAG STRUT CONN.

SCALE: 1"=1'-0"

5 TRUSS PERP W/ VAULT

SCALE: 1"=1'-0"

6 GIRDER @ WALL CORNER / SHEAR TRUSS DRAG STRUT CONN.

SCALE: 1"=1'-0"

7 TRUSS @ BEAM

SCALE: 1"=1'-0"

8 TRUSS TO STUD WALL CONNECTION

SCALE: 1"=1'-0"

FOR PERMIT 09/28/2018

REGISTERED PROFESSIONAL ENGINEER
51319PE
OREGON
JAN. 12, 1995
DAVID J. HORN
Expires: 6-30-19

HCE
Horn Consulting Engineers, LLC
9320 SW Barbur Blvd. Ste 235 Portland, OR 97219
Phone: 503.892.5782 Email: dave@hornce.com

DISCLAIMER: THE SIGNATURE AND STAMP FOR THESE STRUCTURAL DRAWINGS ARE VALID ONLY WHEN ACCOMPANIED BY A DEVELOPMENT AND SITE SPECIFIC SET OF STRUCTURAL CALCULATIONS PREPARED BY HORN CONSULTING ENGINEERS LLC AND SEALED WITH A WET STAMP AND SIGNATURE BY THE ENGINEER WHOSE STAMP APPEARS ON THIS SHEET. CONSTRUCTION SHALL BE PERFORMED ONLY WITH A DRAWING SET APPROVED BY THE LOCAL JURISDICTION.

PARCEL 2
1791 BLANKENSHIP RD
WEST LINN, OR 97068

DETAILS

REVISIONS:	
DATE:	8.14.18
SCALE:	1" = 1'-0"
DRAWN:	LY
JOB NO:	1A-18-02

S4.1

ORIGINAL SHEET SIZE: 22x34

SINGLE FAMILY RESIDENCE - PARCEL 3

1791 BLANKENSHIP ROAD, WEST LINN, OREGON 97068

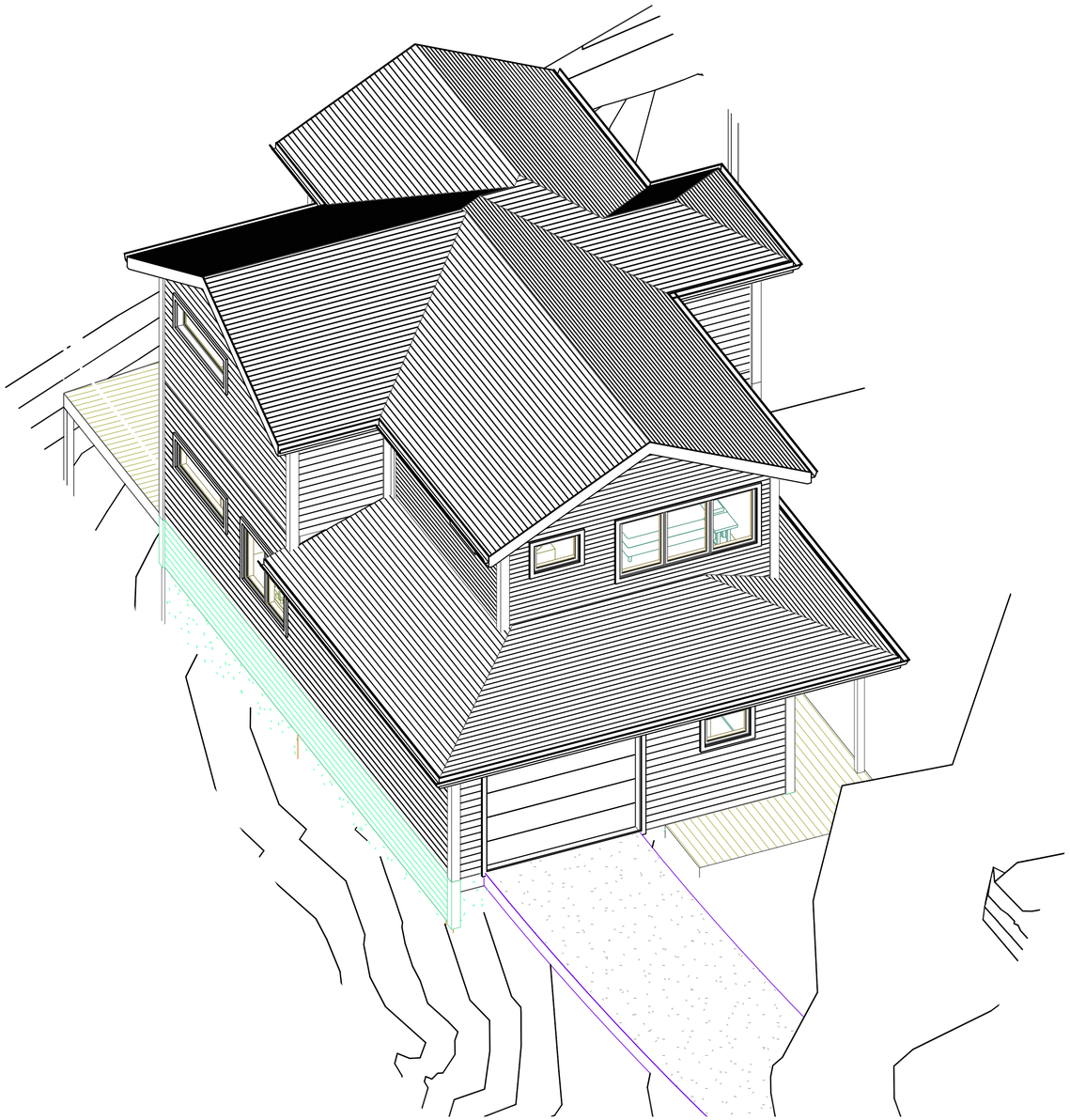

PROJECT TEAM

OWNER: JEREMY BARNETT
10220 SW VIEW TERRACE
TIGARD, OR 97224
PHONE: 503-705-8487
EMAIL: localbarnett@gmail.com

ARCHITECT: INTEGRATE ARCHITECTURE
& PLANNING, P.C.
1715 N. TERRY ST.
PORTLAND, OR 97217
CONTACT: PHIL SYDNOR
PHONE: 716-238-3263
EMAIL: PHIL@INTEGRATEARCH.COM

STRUCTURAL: DAVE HORN
HORN CONSULTING ENGINEERS LLC
9320 SW Barbur Blvd, Ste. 135
Portland, OR 97219
T: 503-892-5782 |C: 503-807-9059|
dave@hornce.com|www.hornce.com

CONTRACTOR:

PROJECT DESCRIPTION

NEW SINGLE-FAMILY DETACHED RESIDENCE.

SITE WAS FORMERLY A SINGLE PARCEL WHICH WAS RECENTLY SUB-DIVIDED INTO THREE (3) INDIVIDUAL PARCELS.
SEE A0.2 FOR PLOT PARTION MAP.

THIS SUBMISSION IS FOR DEVELOPMENT OF PARCEL 3.

SHEET INDEX

A0.0 COVER
A0.1 SURVEY
A0.2 PLOT PARTITION MAP
A1.1 SITE PLAN
A1.1a RIGHT-OF-WAY DETAILS
A1.2 UTILITY PLAN
A1.3 FOUNDATION PLAN
A1.4 SITE ELEVATIONS
A2.0 BUILDING PLANS
A3.0 BUILDING ELEVATIONS
A4.0 BUILDING SECTIONS
A5.0 SCHEDULES
A6.0 REFLECTED CEILING PLANS
A7.0 INTERIOR ELEVATIONS
S0 SHEARWALL AND HOLDDOWN SCHEDULES / STRUCT. NOTES / MAIN FLOOR FRAMING PLAN
S1.1 FOUNDATION / MAIN FLOOR FRAMING PLANS
S1.2 1ST & 2ND FLOOR SHEARWALL / FRAMING PLANS
S2.1 DETAILS
S2.2 DETAILS
S3.1 DETAILS
S3.2 DETAILS
S4.1 DETAILS

PROPERTY INFO.

TAX LOT NO: 21E35CB02600
SITE AREA: 15,315 SF
NEIGHBORHOOD: WILLAMETTE
COMP. PLAN: MU - MIXED USE
ZONING: MU - MIXED USE TRANSITION

APPLICABLE CODES:

CDC CHAPTER 105: AMENDMENTS TO THE MAP AND CODE
CDC CHAPTER 16: R-2.1 ZONING
CDC CHAPTER 48: ACCESS, EGRESS, AND CIRCULATION
CDC CHAPTER 85: LAND DIVISION
CDC CHAPTER 92: REQUIRED IMPROVEMENTS

SITE MAP

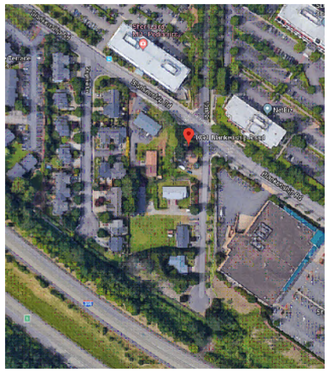

FOR PERMIT 09/28/2018

MARK	DATE	DESCRIPTION

REGISTERED ARCHITECT
PHILIP H. SYDNOR
PORTLAND, OREGON
5822
STATE OF OREGON

COVER

PERMIT SET
09/28/2018
SINGLE FAMILY RESIDENCES
1791 BLANKENSHIP ROAD
WEST LINN, OREGON 97068

A0.0

INTEGRATE
ARCHITECTURE & PLANNING
www.integratearch.com
© Integrate Architecture & Planning, p.c.

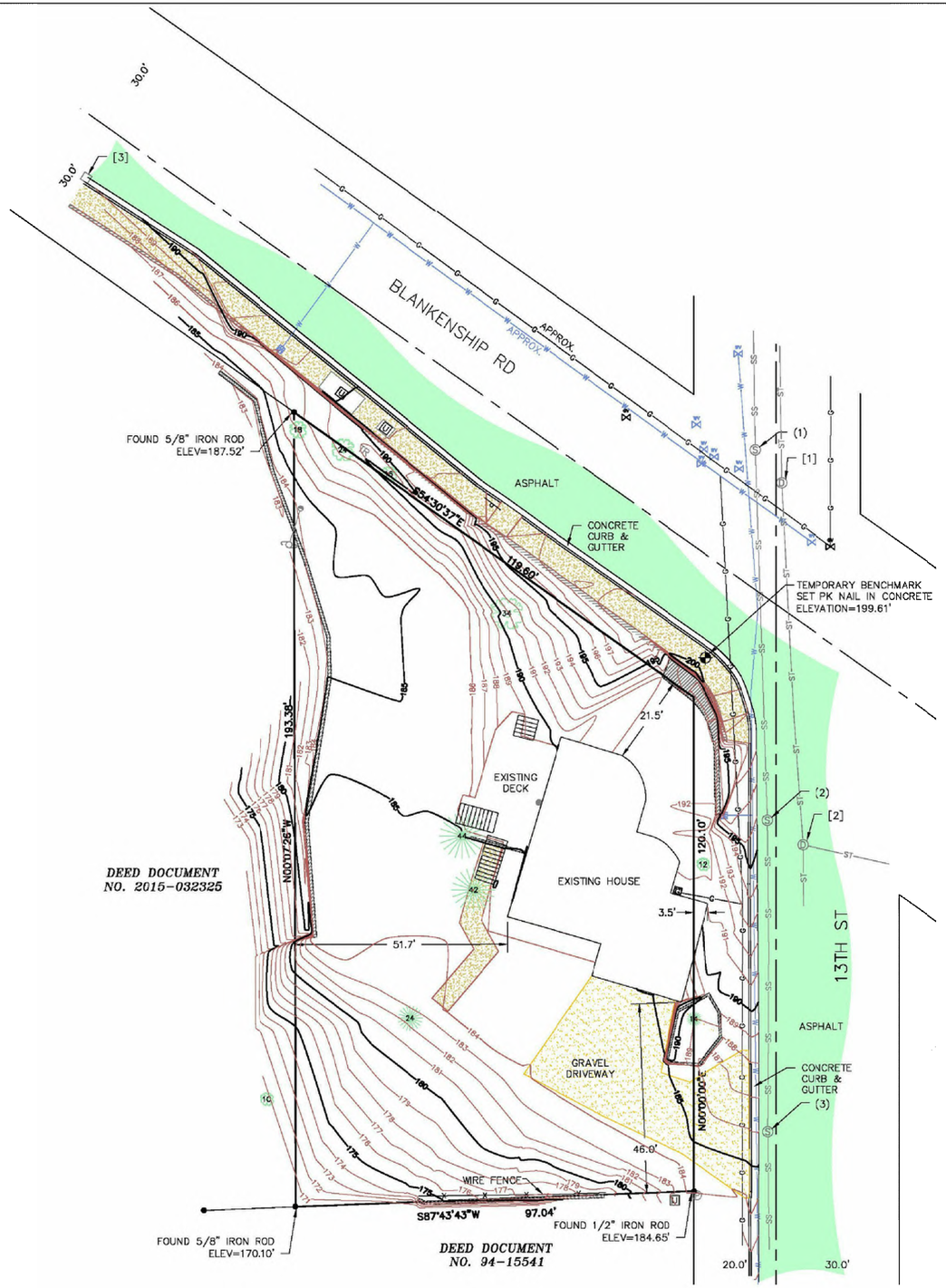

LEGEND

- EXISTING DECIDUOUS TREE W/ TRUNK DIAMETER (INCHES)(CL=CLUSTER)
- EXISTING CONIFEROUS TREE W/ TRUNK DIAMETER (INCHES)(CL=CLUSTER)
- EXISTING SIGN
- EXISTING TELEPHONE RISER
- EXISTING POWER POLE
- EXISTING GUY ANCHOR
- EXISTING ELECTRIC RISER
- EXISTING WATER METER
- EXISTING WATER VALVE
- EXISTING UNDERGROUND WATER
- EXISTING GAS VALVE
- EXISTING GAS METER
- EXISTING UNDERGROUND GAS LINE
- EXISTING CATCH BASIN
- EXISTING SANITARY MANHOLE
- EXISTING STORM MANHOLE
- EXISTING CLEANOUT
- EXISTING SANITARY SEWER LINE
- EXISTING STORM SEWER LINE
- EXISTING UTILITY VAULT
- EXISTING FENCE
- EXISTING WALL
- FOUND MONUMENTS
- LOCAL BENCHMARK ESTABLISHED
- EXISTING GRAVEL
- EXISTING CONCRETE
- EXISTING ASPHALT

N

SCALE 1" = 20'

[1] SDMH
RIM=199.1
24" IE IN N=192.5
IE OUT UNDER WATER

[2] SDMH
RIM=196.7
10" IE IN N=184.7
14" IE IN E=184.5
14" IE OUT S=184.4

[3] SDCB
GRATE=188.3
10" IE OUT N=183.8

(1) SSMH
RIM=198.9
8" IE IN N=190.2
8" IE OUT S=190.0

(2) SSMH
RIM=196.4
8" IE IN N=188.0
8" IE OUT S=187.8

(3) SSMH
RIM=186.1
8" IE IN N=175.4
8" IE OUT S=175.2

NOTES

1. THE PURPOSE OF THIS MAP WAS TO SHOW THE EXISTING CONDITIONS FOR 1791 BLANKENSHIP ROAD.

2. THE BASIS OF BEARINGS WAS PER THE PLAT OF "PARSONS ADDITION," CLACKAMAS COUNTY RECORDS.

3. LOCAL DATUM WAS ESTABLISHED BY CITY OF WEST LINN SANITARY SEWER MAP INFORMATION ON MANHOLE 9B-15-5, IN THE INTERSECTION OF BLANKENSHIP RD. & 13TH ST., RIM=198.93 CITY OF WEST LINN DATUM.

4. THIS MAP WAS PREPARED FOR THE EXCLUSIVE USE OF JEREMY BARNETT.

5. THIS MAP WAS PREPARED BY PLAT RECORDS, CALCULATED DATA, AND FIELD MEASUREMENTS, A RECORDED BOUNDARY SURVEY WILL NOT BE FILED.

6. ALL UTILITY LOCATIONS ARE SHOWN BY ABOVE GROUND FEATURES AND CITY OF PORTLAND MAPS. CMT TAKES NO RESPONSIBILTY OF UNDERGROUND LOCATION. PLEASE NOTIFY THE UTILITY NOTIFICATION CENTER BEFORE ANY DIGGING 1-800-332-2344.

REGISTERED
PROFESSIONAL
LAND SURVEYOR

OREGON
JULY 11, 2017
DONALD SCOTT SORENSON
60310

RENEWAL DATE: JUNE 30, 2020

EXISTING CONDITIONS

1791 BLANKENSHIP RD

SW 1/4 SEC 35, T 2 S, R 1 E, W.M.
CITY OF WEST LINN
CLACKAMAS COUNTY, OREGON
OCTOBER 6, 2017
DRAWN: DSS/RLMc CHECKED: DSS
SCALE 1"=20' ACCOUNT # 227
Y:\227-005\DWG\227005BASE.DWG

CMT SURVEYING AND CONSULTING
9135 SE ST HELENS ST, SUITE J
PO BOX 3251
CLACKAMAS, OR 97015
PHONE (503) 850-4672 FAX (503) 850-4590

FOR PERMIT 09/28/2018

MARK	DATE	DESCRIPTION

REGISTERED ARCHITECT
PHILIP H. SYDNOR
PORTLAND, OREGON
5822
STATE OF OREGON

SURVEY

PERMIT SET
09/28/2018
SINGLE FAMILY
RESIDENCES
1791 BLANKENSHIP ROAD
WEST LINN, OREGON 97068

A0.1

INTEGRATE
ARCHITECTURE & PLANNING
www.integratearch.com
© Integrate Architecture & Planning, p.c.

PARTITION PLAT NO. _____

A REPLAT OF A PORTION OF TRACT 4, OF THE PLAT OF "WILLAMETTE TRACTS"
LOCATED IN THE SOUTHWEST ONE-QUARTER OF SECTION 35,
TOWNSHIP 2 SOUTH, RANGE 1 EAST, OF THE WILLAMETTE MERIDIAN,
CITY OF WEST LINN, CLACKAMAS COUNTY, OREGON

DATE: NOVEMBER 2, 2017

SURVEYED FOR: JEREMY BARNETT
PO BOX 258
OREGON CITY, OR 97045

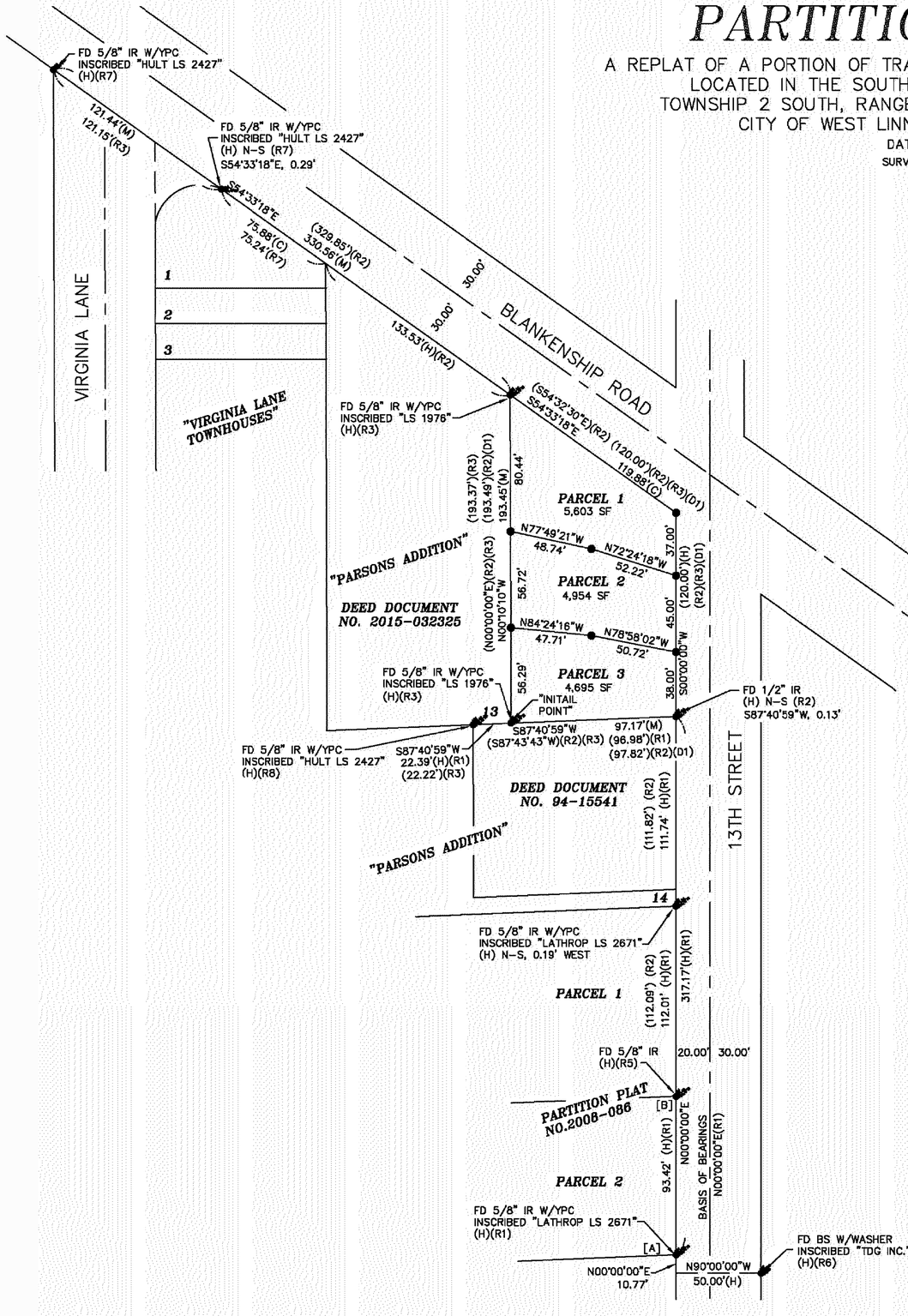

LEGEND

- ● FOUND MONUMENTS AS NOTED
- ● 5/8" X 30" IRON ROD WITH YPC INSCRIBED "CMT 60310" SET ON: _____

BS = BRASSSCREW
IR = IRON ROD
IP = IRON PIPE
FD = FOUND
SN = SURVEY NUMBER, WASHINGTON COUNTY RECORDS
(M) = MEASURED
(C) = CALCULATED
(H) = HELD
(R1) = REFERENCE SURVEY NUMBER OR PLAT NAME
( ) = RECORD DATA
N-S = NORTH-SOUTH
SF = SQUARE FEET

REFERENCE SURVEYS

(R1) PARTITION PLAT NO. 2008-086
(R2) PLAT OF "PARSONS ADDITION"
(R3) SN 24783
(R4) SN 5090
(R5) SN 12283
(R6) PLAT OF "TENTH STREET CENTRE"
(R7) PLAT OF "VIRGINIA LANE TOWNHOUSES"
(D1) DOCUMENT NO. 2004-103500

N

SCALE
50 0 25 50
1 INCH = 50 FEET

NARRATIVE

THE PURPOSE OF THIS SURVEY IS TO REESTABLISH AND MONUMENT THE BOUNDARY OF THE PROPERTY DESCRIBED IN DOCUMENT NO. 2004-103500, CLACKAMAS COUNTY DEED RECORDS, BEING A PORTION OF TRACT 4 "WILLAMETTE TRACTS", CLACKAMAS COUNTY PLAT RECORDS AND TO PARTITION AND MONUMENT THE SAME.

THE BASIS OF BEARINGS AND WEST RIGHT OF WAY LINE OF 13TH STREET, I HELD THE RECORD BEARING OF N 00°00'00 E, PER PARTITION PLAT NO. 2008-086 (R1) BETWEEN A 5/8" IRON ROD FOUND AT THE SOUTHEAST CORNER OF PARCEL 2 OF SAID PLAT AT [A], AND A 5/8" IRON ROD AT THE NORTHEAST CORNER OF SAID PARCEL 2 OF SAID PLAT AT [B], AS SHOWN.

TO ESTABLISH THE EAST LINE OF THE SUBJECT PROPERTY, BEING THE WEST RIGHT OF WAY LINE OF 13TH STREET, I HELD RECORD BEARING (N 00°00'00" E) AND RECORD DISTANCE (317.17') PER (R1) FROM THE SOUTHEAST CORNER OF SAID PARCEL 2 OF SAID PLAT TO THE SOUTHEAST CORNER OF THE SUBJECT PROPERTY. I THEN WENT RECORD BEARING (N 00°00'00" E) PER (R1) AND RECORD DISTANCE (120.00') PER (D1) TO ESTABLISH THE NORTHEAST CORNER OF THE SUBJECT PROPERTY, AS SHOWN.

TO ESTABLISH THE SOUTH LINE OF THE SUBJECT PROPERTY, I HELD THE MONUMENT FOUND NEAR THE SOUTHEAST CORNER OF THE SUBJECT PROPERTY AND THE MONUMENT HELD AT THE SOUTHEAST CORNER OF LOT 13 "PARSONS ADDITION" (R2), CLACKAMAS COUNTY PLAT RECORDS, AS SHOWN.

TO ESTABLISH THE WEST LINE OF THE SUBJECT PROPERTY, I HELD THE MONUMENT AT THE SOUTHEAST CORNER OF LOT 13, "PARSONS ADDITION" (R2), AND THE NORTHEAST CORNER OF SAID LOT AND PLAT, AS SHOWN.

TO ESTABLISH THE NORTHERLY LINE OF THE SUBJECT PROPERTY, BEING THE SOUTHERLY RIGHT OF WAY LINE OF BLANKENSHIP ROAD. I HELD THE MONUMENT FOUND AT THE NORTHEAST CORNER OF SAID LOT AND PLAT, AND THE MONUMENT ESTABLISHED AT THE NORTHEAST CORNER OF THE SUBJECT PROPERTY, AS SHOWN.

REGISTERED
PROFESSIONAL
LAND SURVEYOR
DRAFT
OREGON
JULY 11, 2017
DONALD SCOTT SORENSON
60310

RENEWAL DATE: JUNE 30, 2020

SHEET 1 OF 2

CMT SURVEYING AND CONSULTING
20330 SE HIGHWAY 212
DAMASCUS, OR 97089
PHONE (503) 850-4672 FAX (503) 850-4590
Y:\227-005\dwg\227-005PART1.dwg---DSS

FOR PERMIT 09/28/2018

MARK	DATE	DESCRIPTION

REGISTERED ARCHITECT
PHILIP H. SYDNOR
PORTLAND, OREGON
5822
STATE OF OREGON

PLOT PARTITION MAP

PERMIT SET
09/28/2018
SINGLE FAMILY RESIDENCES
1791 BLANKENSHIP ROAD
WEST LINN, OREGON 97068

A0.2

INTEGRATE
ARCHITECTURE & PLANNING
www.integratearch.com

© Integrate Architecture & Planning, p.c.

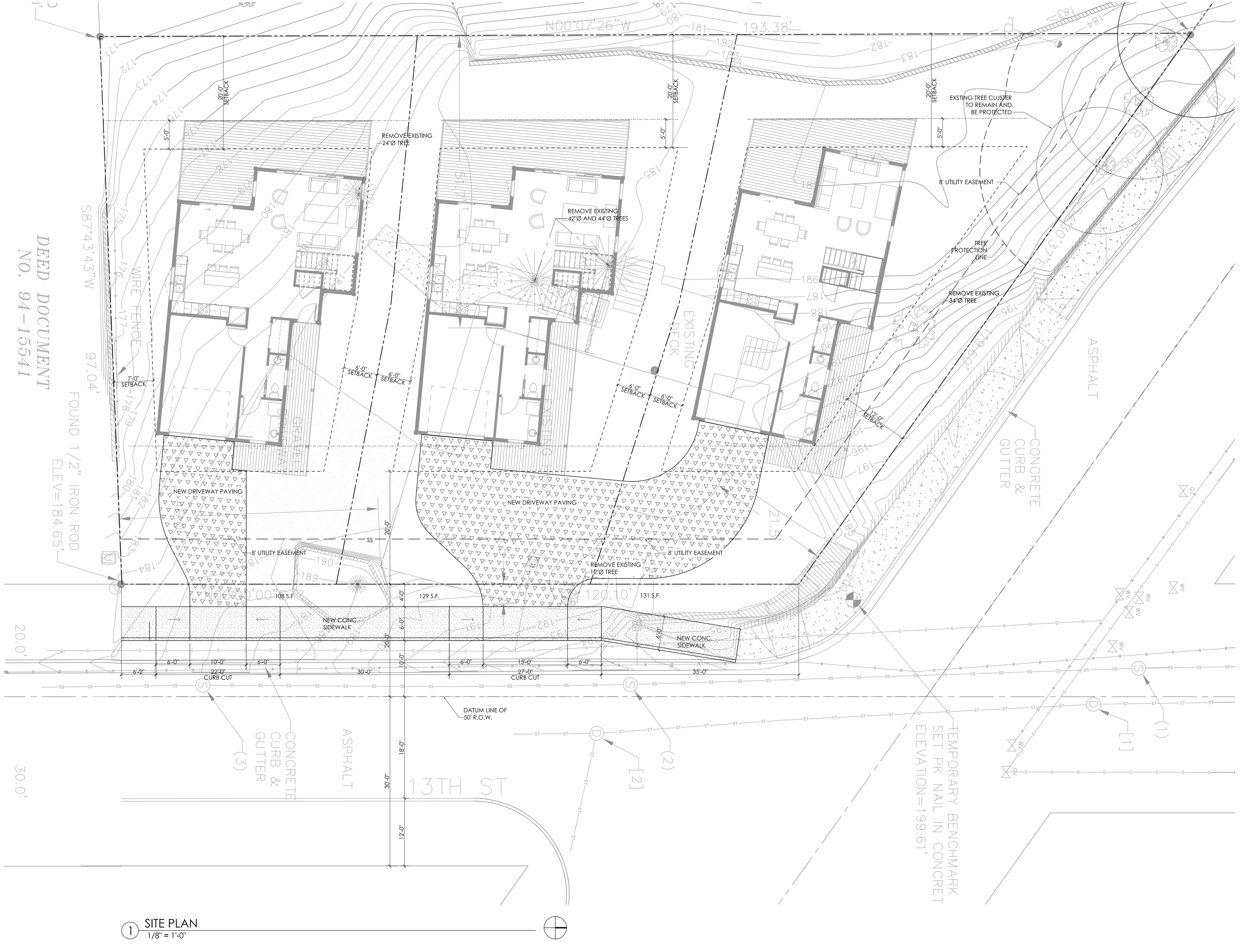

1 SITE PLAN
1/8" = 1'-0"

MARK	DATE	DESCRIPTION

REGISTERED ARCHITECT
PHILIP H. SYDNOR
PORTLAND, OREGON
5822
STATE OF OREGON

SITE PLAN

LU Submittal
03/12/2019
SINGLE FAMILY RESIDENCES
1791 BLANKENSHIP ROAD
WEST LINN, OREGON 97068

A1.1

INTEGRATE
ARCHITECTURE & PLANNING
www.integratearch.com
© Integrate Architecture & Planning, p.c.

1 SITE PLAN
1/8" = 1'-0"

MARK DATE DESCRIPTION

REGISTERED ARCHITECT
PHILIP H. SYDNOR
PORTLAND, OREGON
5822
STATE OF OREGON

TOPOGRAPHY
SITE SLOPE PLAN

PERMIT SET
03/12/2019
SINGLE FAMILY
RESIDENCES
1791 BLANKENSHIP ROAD
WEST LINN, OREGON 97068

A1.1a

INTEGRATE
ARCHITECTURE & PLANNING
www.integratearch.com
© Integrate Architecture & Planning, p.c.

1 EXISTING TREE PLAN
1/8" = 1'-0"

MARK	DATE	DESCRIPTION

REGISTERED ARCHITECT
PHILIP H. SYDNOR
PORTLAND, OREGON
5822
STATE OF OREGON

EXSITING TREE PLAN

PERMIT SET
03/12/2019
SINGLE FAMILY RESIDENCES
1791 BLANKENSHIP ROAD
WEST LINN, OREGON 97068

A1.1b

INTEGRATE
ARCHITECTURE & PLANNING
www.integratearch.com
© Integrate Architecture & Planning, p.c.

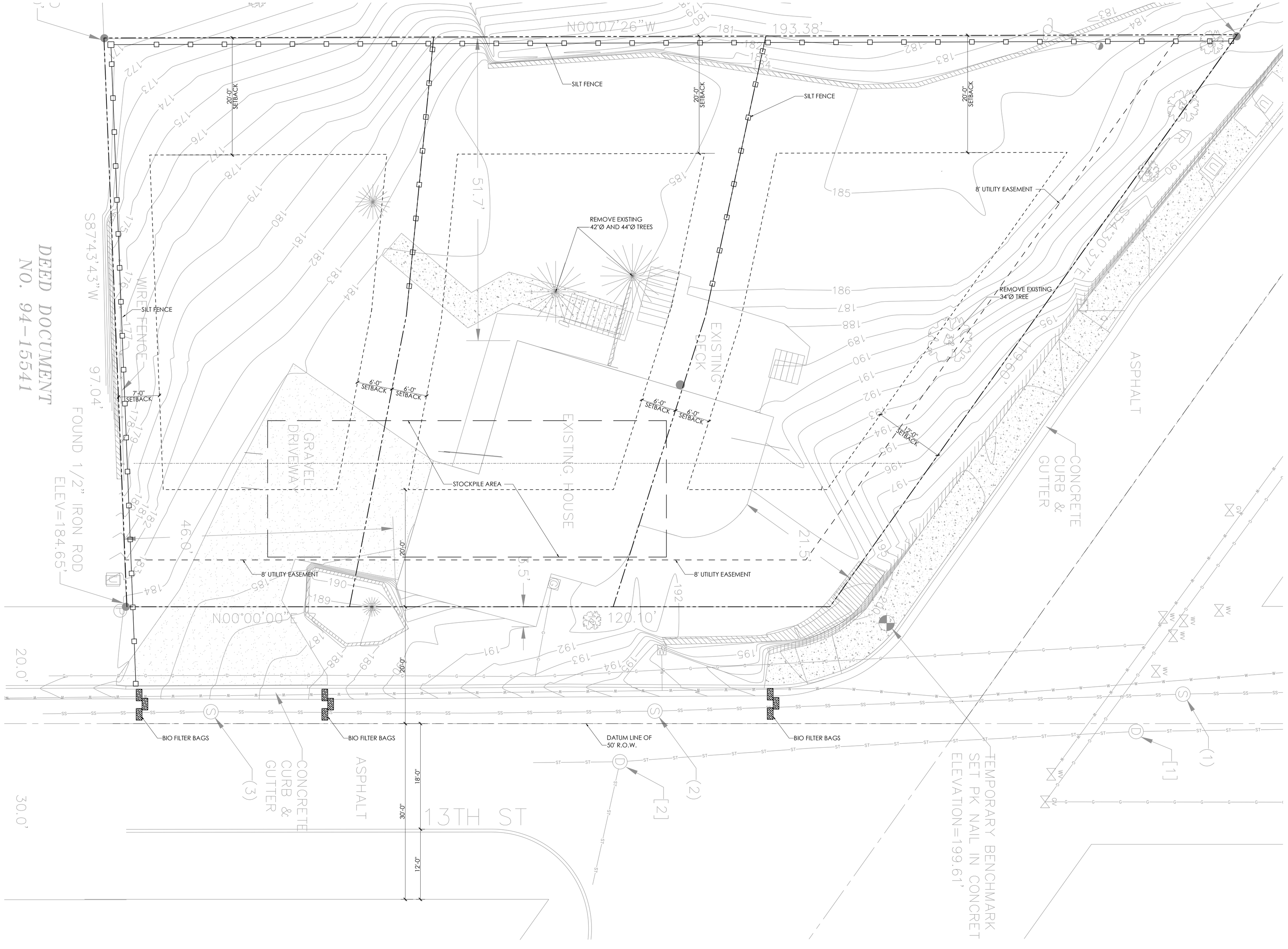

1 SITE PLAN
1/8" = 1'-0"

SITE SUMMARY

DEED DOCUMENT NO. 94-15541

MARK	DATE	DESCRIPTION

REGISTERED ARCHITECT
PHILIP H. SYDNOR
PORTLAND, OREGON
5822
STATE OF OREGON

GRADING AND EROSION CONTROL

PERMIT SET
03/12/2019
SINGLE FAMILY RESIDENCES
1791 BLANKENSHIP ROAD
WEST LINN, OREGON 97068

A1.1c

INTEGRATE
ARCHITECTURE & PLANNING
www.integratearch.com
© Integrate Architecture & Planning, p.c.

PROPERTY LINE

BLANKENSHIP RD

13TH STREET

RAINWATER LEADER

FLOW THRU PLANTER, SEE CIVIL DRAWINGS

8' UTILITY EASEMENT

(N) WATER METER

(E) GAS METER

(N) RELOCATED WATER METER

RELOCATE (E) WATER METER

REF.

TR

UTILITY LEGEND

ST ——— ST	(E) STORM SEWER LINE
D	(E) STORM MANHOLE
SS ——— SS	(E) SANITARY SEWER LINE
S	(E) SANITARY MANHOLE
W ——— W	(E) WATER LINE
W	(E) WATER METER
WV	(E) WATER VALVE
G ——— G	(E) UNDERGROUND GAS LINE
G	(E) GAS METER
GV	(E) GAS VALVE
U	(E) UTILITY VAULT
	(E) POWER POLE
G	(N) GAS LINE
SS	(N) SANITARY SEWER
W	(W) WATER LINE
OV. FL.	STORM OVERFLOW (DAYLIGHT AT STREET)

COORDINATE UNDERGROUND UTILITIES WITH GRADING, EXCAVATION AND OTHER SITE WORK.

MARK	DATE	DESCRIPTION

REGISTERED ARCHITECT
PHILIP H. SYDNOR
PORTLAND, OREGON
5822
STATE OF OREGON

UTILITY PLAN

PERMIT SET
03/12/2019
SINGLE FAMILY RESIDENCES
1791 BLANKENSHIP ROAD
WEST LINN, OREGON 97068

A1.2

INTEGRATE
ARCHITECTURE & PLANNING
www.integratearch.com
© Integrate Architecture & Planning, p.c.

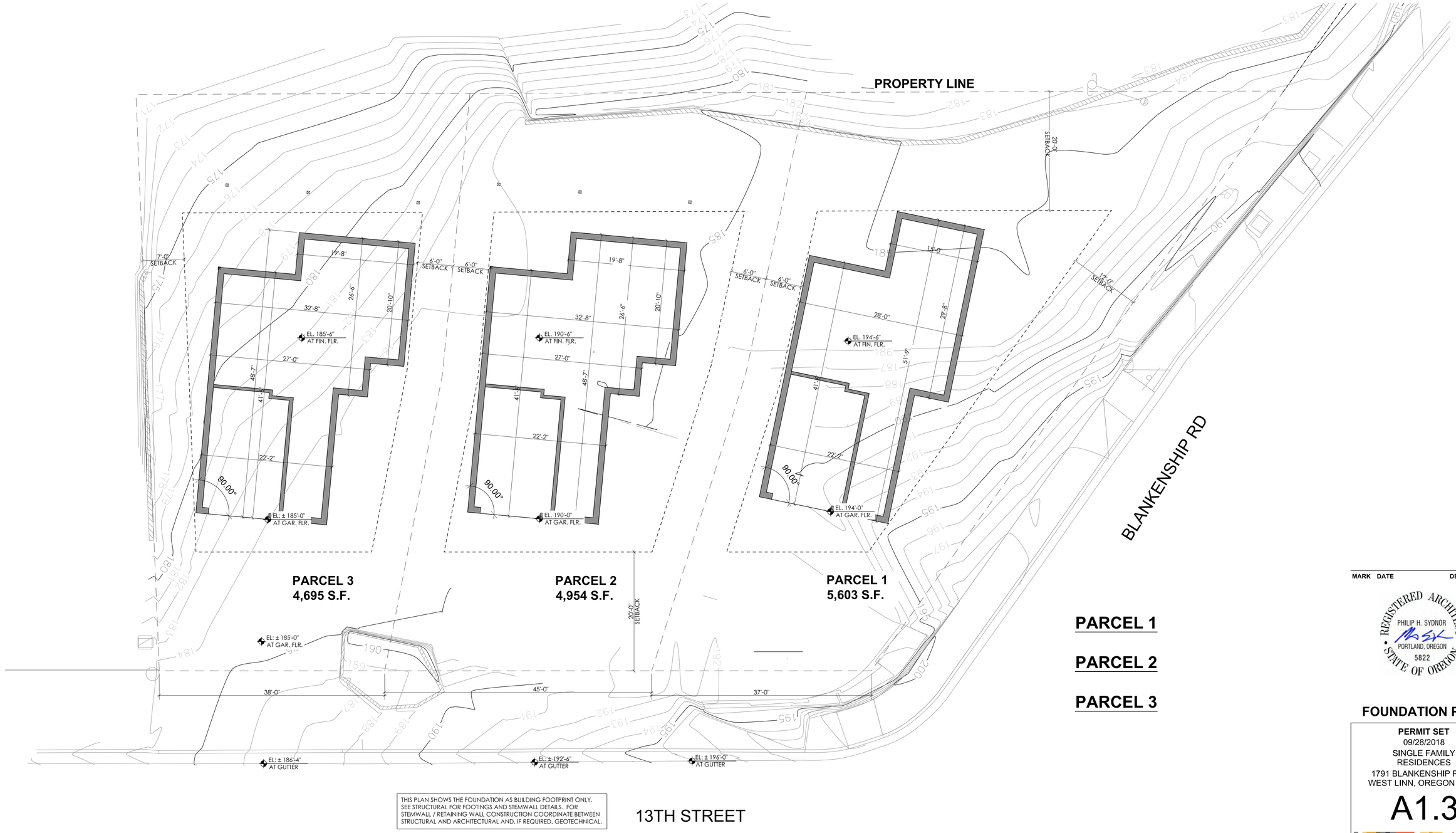

PARCEL 1

PARCEL 2

PARCEL 3

THIS PLAN SHOWS THE FOUNDATION AS BUILDING FOOTPRINT ONLY. SEE STRUCTURAL FOR FOOTINGS AND STEMWALL DETAILS. FOR STEMWALL / RETAINING WALL CONSTRUCTION COORDINATE BETWEEN STRUCTURAL AND ARCHITECTURAL AND, IF REQUIRED, GEOTECHNICAL.

1 FOUNDATION PLAN
1/8" = 1'-0"

MARK	DATE	DESCRIPTION

REGISTERED ARCHITECT
PHILIP H. SYDNOR
PORTLAND, OREGON
5822
STATE OF OREGON

FOUNDATION PLAN

PERMIT SET
09/28/2018
SINGLE FAMILY RESIDENCES
1791 BLANKENSHIP ROAD
WEST LINN, OREGON 97068

A1.3

INTEGRATE
ARCHITECTURE & PLANNING
www.integratearch.com
© Integrate Architecture & Planning, p.c.

THIS DETAIL DRAWING SHALL NOT BE ALTERED OR CHANGED IN ANY MANNER EXCEPT BY THE CITY ENGINEER. IT IS THE RESPONSIBILITY OF THE USER TO ACQUIRE THE MOST CURRENT VERSION OF THE DETAIL.

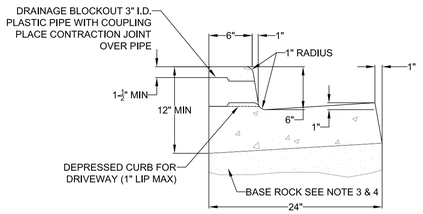

FLUSH, DEPRESSED CURB FOR WHEELCHAIR RAMP 2% MAX SLOPE

TYPICAL CURB AND GUTTER

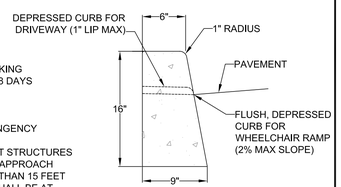

TYPICAL STRAIGHT CURB

NOTE:

1. CONCRETE SHALL HAVE A BREAKING STRENGTH OF 3300 PSI AFTER 28 DAYS
2. CONTRACTION JOINTS:
   A) TO BE PROVIDED:
      -AT EACH POINT OF TANGENCY
      -AT EACH COLD JOINT
      -AT EACH SIDE OF INLET STRUCTURES
      -AT BOTH SIDES OF AN APPROACH
   B) SPACING TO BE NOT MORE THAN 15 FEET
   C) THE DEPTH OF THE JOINT SHALL BE AT LEAST 1/3 OF THE THICKNESS OF CONCRETE
   D) EXPANSION JOINTS SHALL NOT BE USED
3. BASE ROCK - 1-1/2"-0", 95% COMPACTION PER AASHTO T-180 ROCK SHALL BE TO SUBGRADE OF THE STREET SECTION OR 4" IN DEPTH, WHICHEVER IS GREATER
4. FULL DEPTH PREPARED ROCK SECTION SHALL EXTEND 1' HORIZONTALLY BEYOND BOTH SIDES OF CURB AND GUTTER
5. DRAINAGE BLOCK - 3" DIA. PLASTIC PIPE
   A) DRAINAGE ACCESS THROUGH EXISTING CURBS SHALL BE DONE BY:
      -CORE DRILLING
      -VERTICAL SAWCUT OF CURB 24" EACH SIDE OF DRAIN AND RE-POURED TO FULL DEPTH OF CURB
6. STAMP TOP OF CURB WITH "W" AT WATER SERVICE CROSSING AND "S" AT SANITARY LATERAL CROSSING

TYPICAL CURBS

City of West Linn

DATE: 2010
DRAWING NO. WL-501
FILE NO.

THIS DETAIL DRAWING SHALL NOT BE ALTERED OR CHANGED IN ANY MANNER EXCEPT BY THE CITY ENGINEER. IT IS THE RESPONSIBILITY OF THE USER TO ACQUIRE THE MOST CURRENT VERSION OF THE DETAIL.

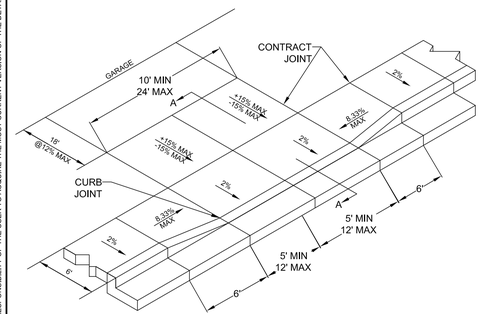

SIDEWALK ADJACENT TO CURB

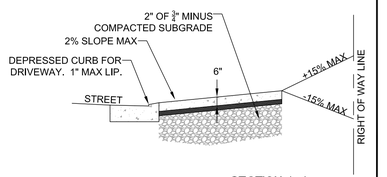

SECTION A-A

NOTE:

1. CONCRETE SHALL HAVE A MINIMUM BREAKING STRENGTH OF 3300 PSI AFTER 28 DAYS 6 SACK MIX
2. CURB SHALL BE TROWELED JOINT WITH MIN. 1/2" RADIUS ALONG BACK OF CURB
3. DRIVEWAY SHALL BE A MINIMUM 6" THICK
4. DRIVEWAY CURB CUT SHALL COMPLY WITH THE CONDITIONS OF 5.0070, "WIDTH AND LOCATION OF CURB CUTS"
5. FOR REPLACEMENT OF EXISITNG APPROACH:

   A. MUST MEET CURRENT ADA REQUIREMENTS TO GREATEST DEGREE POSSIBLE
   B. DAMAGED ROADWAY MUST BE SAWCUT AND REPAVED WITH CLASS C HOT MIX ASPHALT

RESIDENTIAL DRIVEWAY WITH SIDEWALK ADJACENT TO CURB

City of West Linn

DATE: 2010
DRAWING NO. WL-503B
FILE NO.

THIS DETAIL DRAWING SHALL NOT BE ALTERED OR CHANGED IN ANY MANNER EXCEPT BY THE CITY ENGINEER. IT IS THE RESPONSIBILITY OF THE USER TO ACQUIRE THE MOST CURRENT VERSION OF THE DETAIL.

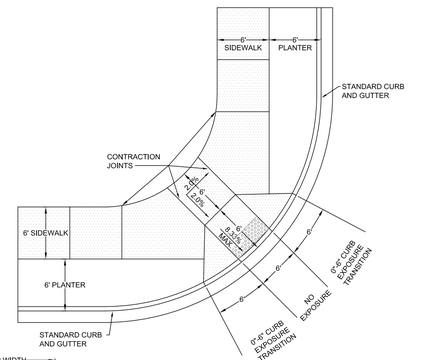

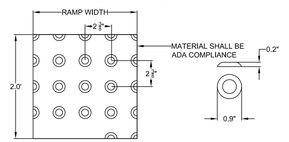

RAMP TEXTURE PATTERN DETAIL

TRUNCATED DOME DETAIL

NOTE:

1. LANDING AT TOP OF RAMP SHALL NOT EXCEED 2% IN ANY DIRECTION AND SHALL BE A MINIMUM OF 60" x 60".
2. RAMP CROSS SLOPE SHALL NOT EXCEED 2% (AS MEASURED PERPENDICULAR TO PEDESTRIAN TRAFFIC FLOW).
3. TRUNCATED DOME MUST EXTEND THE FULL WIDTH OF THE RAMP AND COVER THE FIRST 2 FEET OF THE RAMP CLOSEST TO THE STREET.
4. TRANSITIONS FROM THE RAMP TO THE WALKWAY, GUTTER, AND STREET MUST BE FLUSH (LEVEL) AND FREE OF ABRUPT LEVEL CHANGES.
5. THE GUTTER OR ADJACENT ROADWAY MUST HAVE A SLOPE OF NO MORE THAN 5 PERCENT (1:20) TOWARD THE RAMP.
6. FLARED SIDES ("WING") OF THE CURB RAMP SHALL NOT EXCEED 10% IN SLOPE (8.33% IF PEDESTRIAN TRAVEL IS REQUIRED OVER THEM PER ADA STANDARDS - I.E. IF MINIMUM 48" x 48" (FOR EXISTING SITES ONLY) LANDING IS NOT PROVIDED AT TOP OF RAMP).
7. CONCRETE STRENGTH SHALL BE 3300 PSI.
8. PLACE CONTRACTION JOINTS AS SHOWN ABOVE.
9. NO ABOVE GROUND UTILITIES ARE PERMITTED WITHIN RAMP AREA.
10. WHEN EITHER OPPOSING CURB RAMP HAS AN EXISTING TWIN RAMP, USE DETAIL WL-507B.

SINGLE CURB RAMP (ALLOWED WITH CITY ENGINEER APPROVAL ONLY)

City of West Linn

DATE: 2010
DRAWING NO. WL-507A
FILE NO.

FOR PERMIT 09/28/2018

MARK	DATE	DESCRIPTION

REGISTERED ARCHITECT
PHILIP H. SYDNOR
PORTLAND, OREGON
5822
STATE OF OREGON

RIGHT-OF-WAY DETAILS

PERMIT SET
09/28/2018
SINGLE FAMILY
RESIDENCES
1791 BLANKENSHIP ROAD
WEST LINN, OREGON 97068

A1.4

INTEGRATE
ARCHITECTURE & PLANNING
www.integratearch.com
© Integrate Architecture & Planning, p.c.

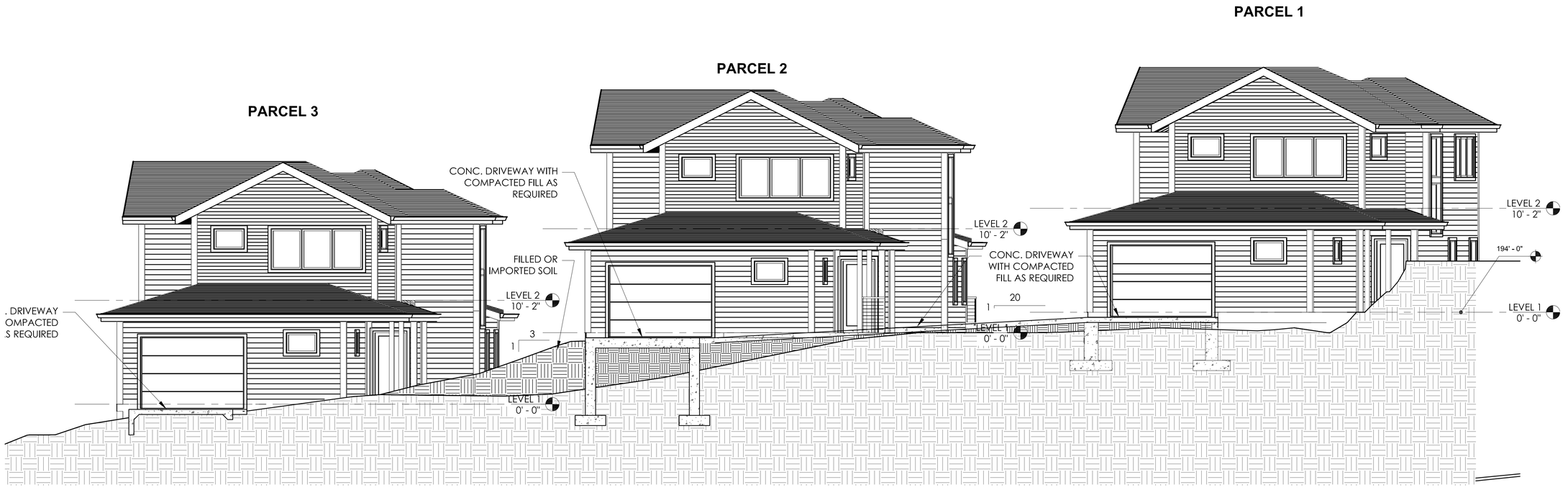

4 EAST ELEVATION
3/16" = 1'-0"

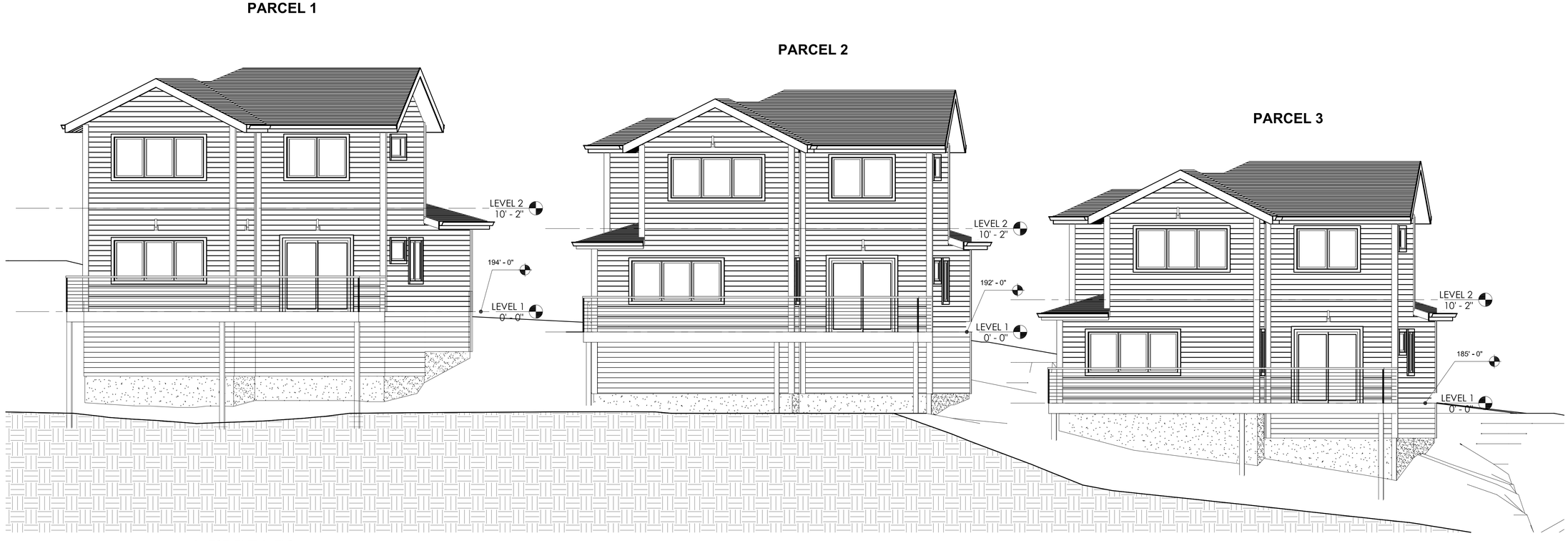

2 WEST ELEVATION
3/16" = 1'-0"

FOR PERMIT 09/28/2018

MARK	DATE	DESCRIPTION

REGISTERED ARCHITECT
PHILIP H. SYDNOR
PORTLAND, OREGON
5822
STATE OF OREGON

SITE ELEVATIONS

PERMIT SET
09/28/2018
SINGLE FAMILY RESIDENCES
1791 BLANKENSHIP ROAD
WEST LINN, OREGON 97068

A1.4

INTEGRATE
ARCHITECTURE & PLANNING
www.integratearch.com
© Integrate Architecture & Planning, p.c.

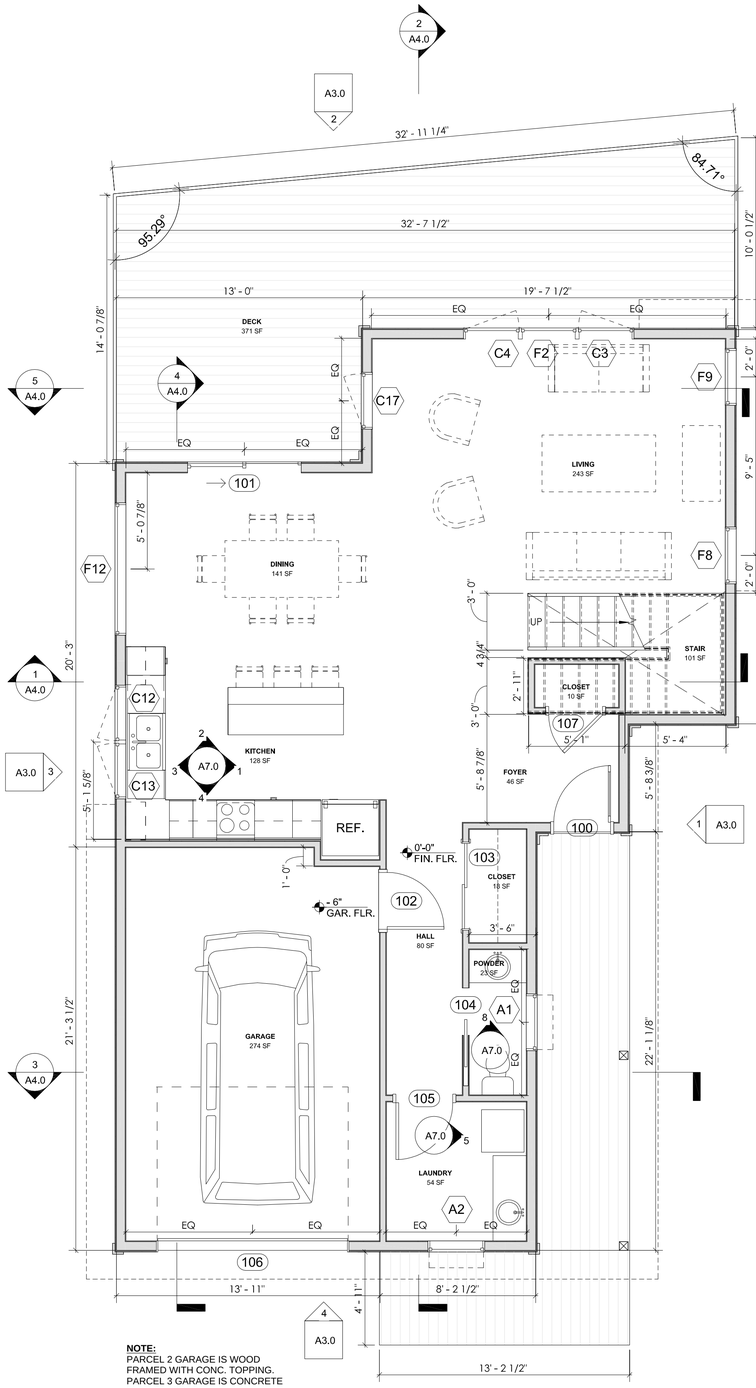

1 LEVEL 1 PLAN — 946 SF
1/4" = 1'-0"

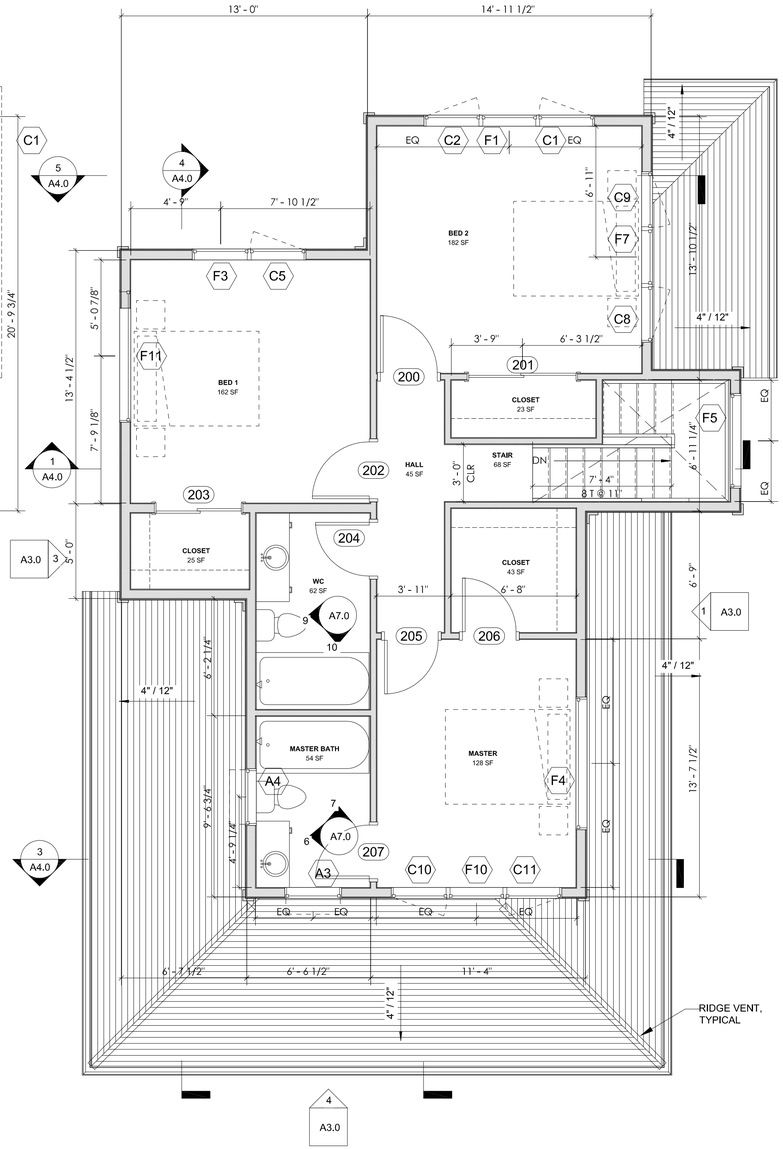

2 LEVEL 2 PLAN — 931 SF
1/4" = 1'-0"

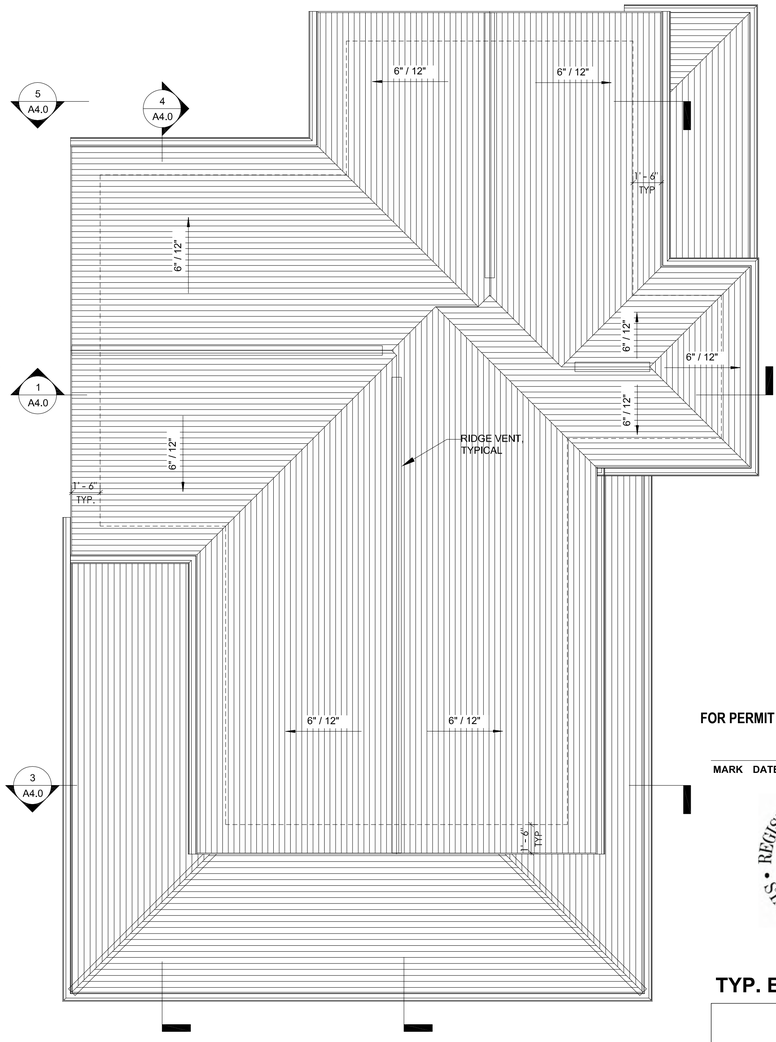

3 ROOF PLAN
1/4" = 1'-0"

FOR PERMIT 09/28/2018

MARK	DATE	DESCRIPTION

REGISTERED ARCHITECT
PHILIP H. SYDNOR
PORTLAND, OREGON
5822
STATE OF OREGON

TYP. BUILDING PLANS

PERMIT SET
09/28/2018
SINGLE FAMILY RESIDENCES
1791 BLANKENSHIP ROAD
WEST LINN, OREGON 97068

A2.0

INTEGRATE
ARCHITECTURE & PLANNING
www.integratearch.com
© Integrate Architecture & Planning, p.c.

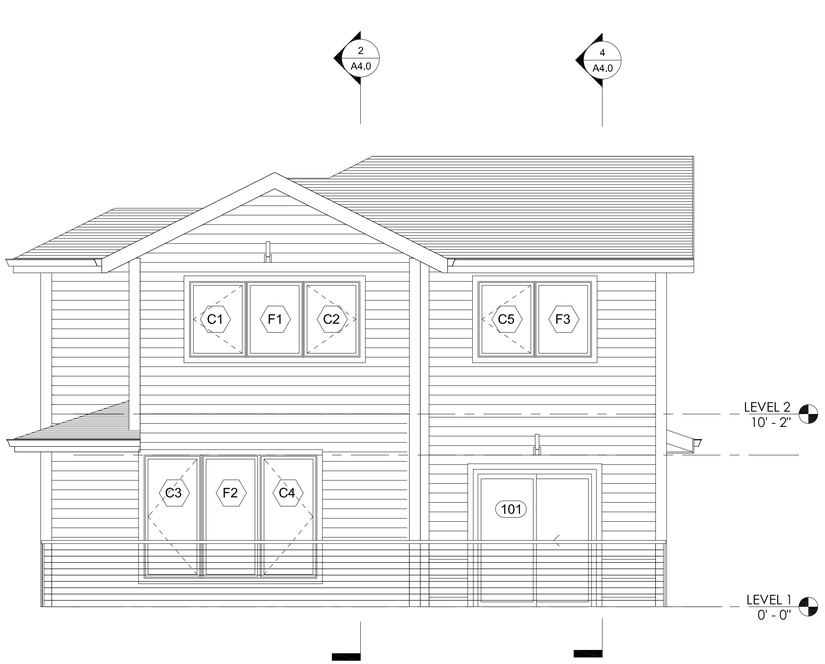

2 NORTH ELEVATION
1/4" = 1'-0"

1 EAST ELEVATION
1/4" = 1'-0"

6" LAP SIDING
(2,058 SF)

4" ACCENT LAP SIDING
(560 SF)

NOTES

1. SEE SECTIONS AND STRUCTURAL FOR FOUNDATION DESIGN.
2. SEE SURVEY FOR TOPOGRAPHIC INFORMATION RELATING TO SITE SLOPE.

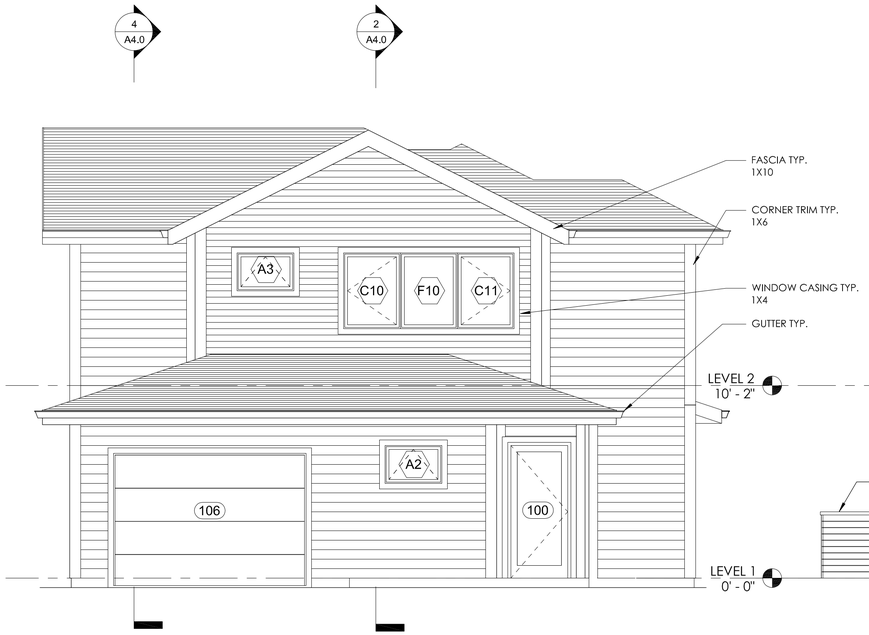

4 SOUTH ELEVATION
1/4" = 1'-0"

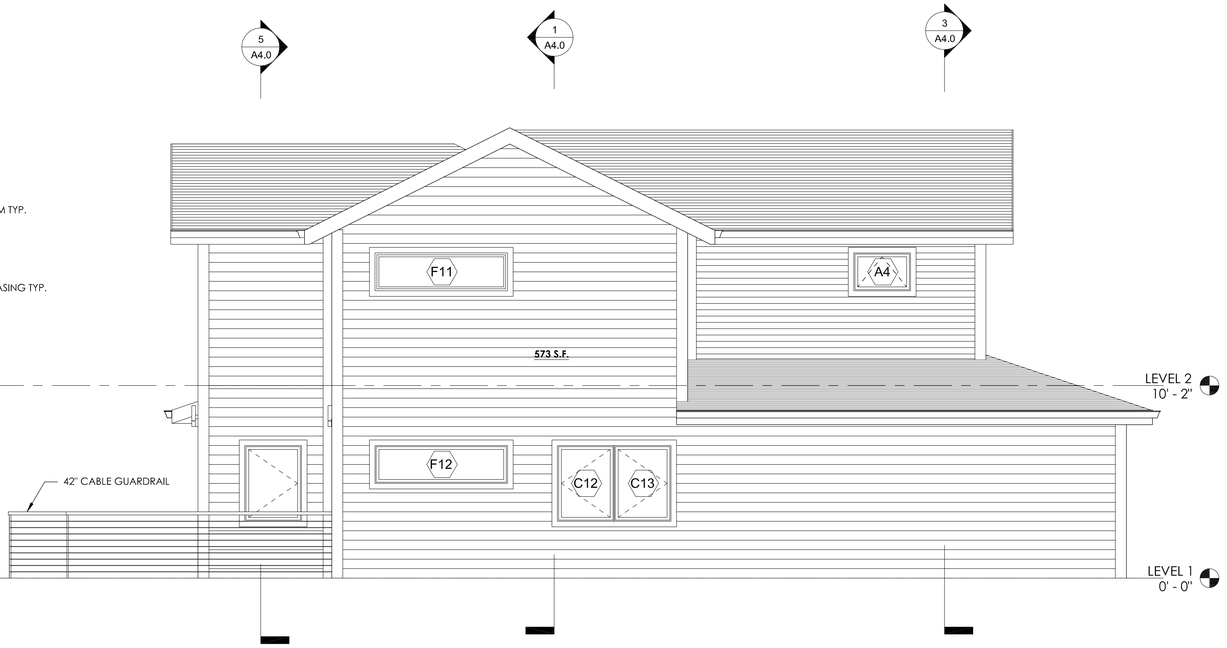

3 WEST ELEVATION
1/4" = 1'-0"

FOR PERMIT 09/28/2018

MARK	DATE	DESCRIPTION

REGISTERED ARCHITECT
PHILIP H. SYDNOR
PORTLAND, OREGON
5822
STATE OF OREGON

TYP. BUILDING ELEVATIONS

PERMIT SET
09/28/2018
SINGLE FAMILY RESIDENCES
1791 BLANKENSHIP ROAD
WEST LINN, OREGON 97068

A3.0

INTEGRATE
ARCHITECTURE & PLANNING
www.integratearch.com
© Integrate Architecture & Planning, p.c.

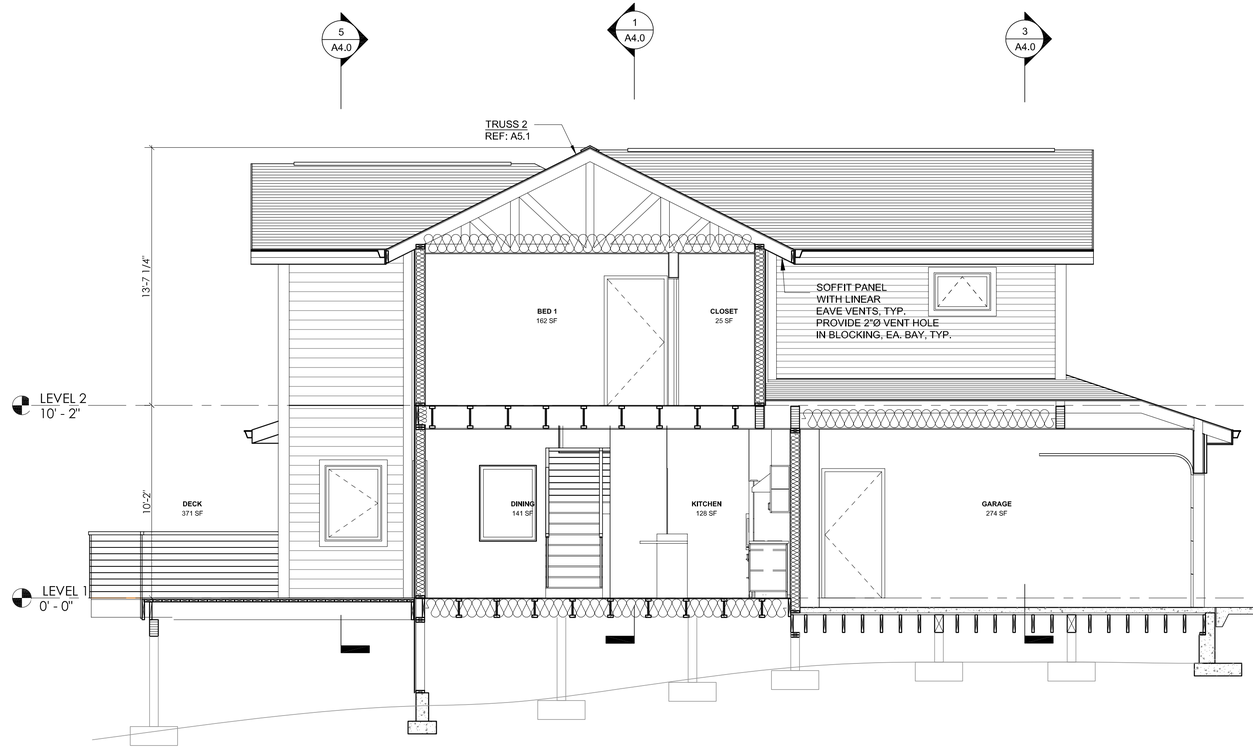

4 Section 1
1/4" = 1'-0"

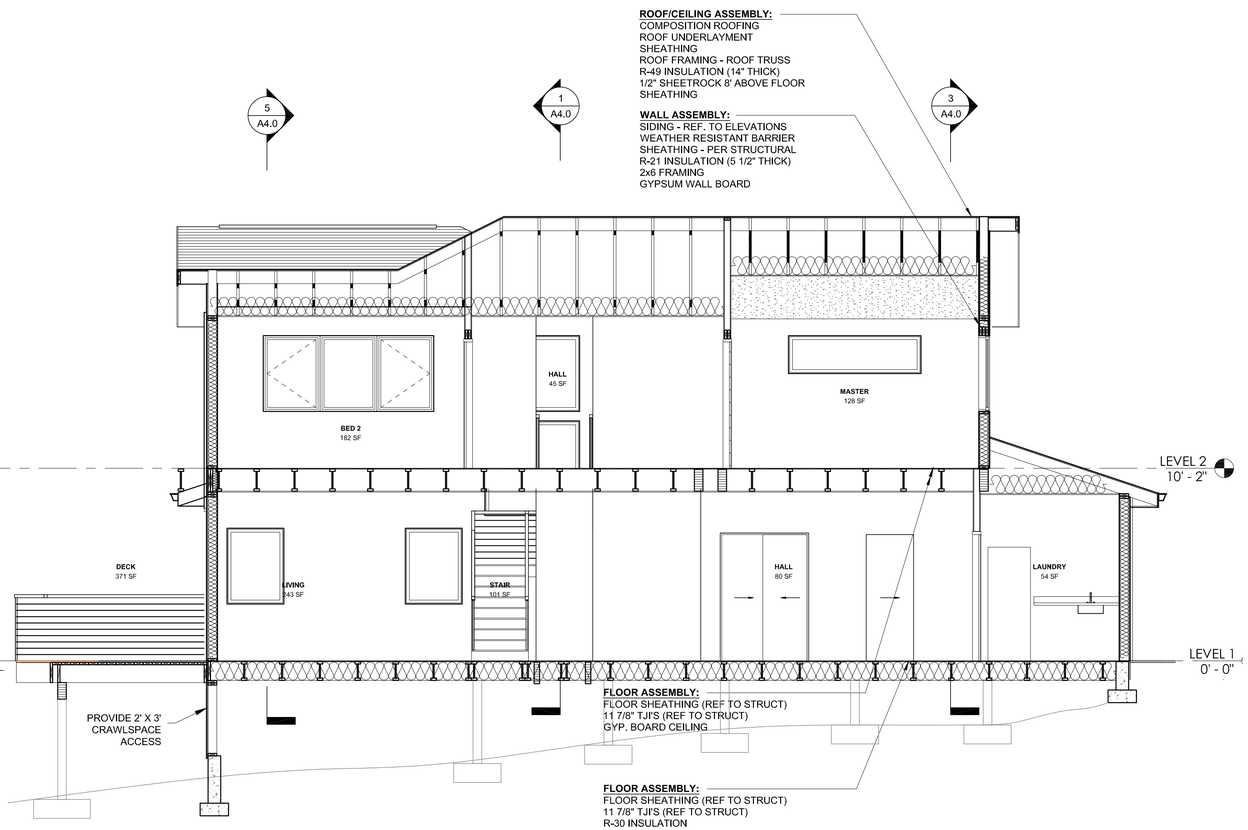

2 Section 2
1/4" = 1'-0"

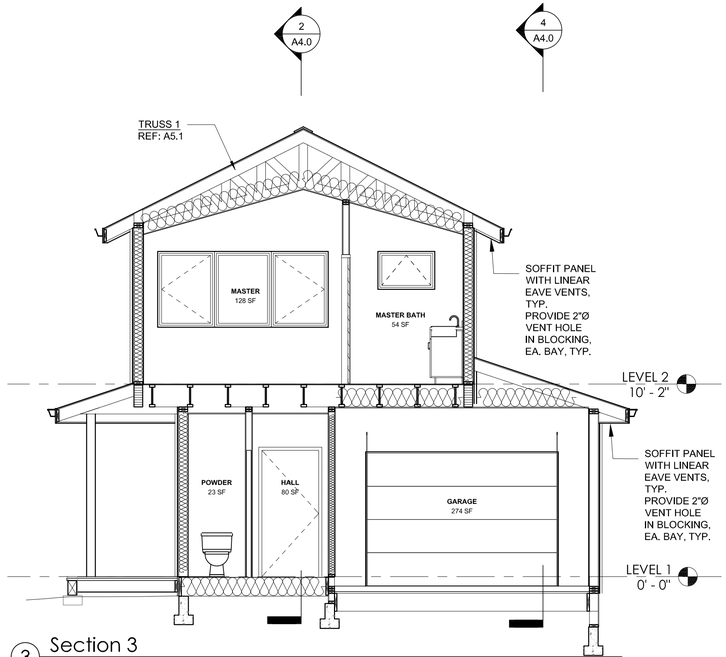

3 Section 3
1/4" = 1'-0"

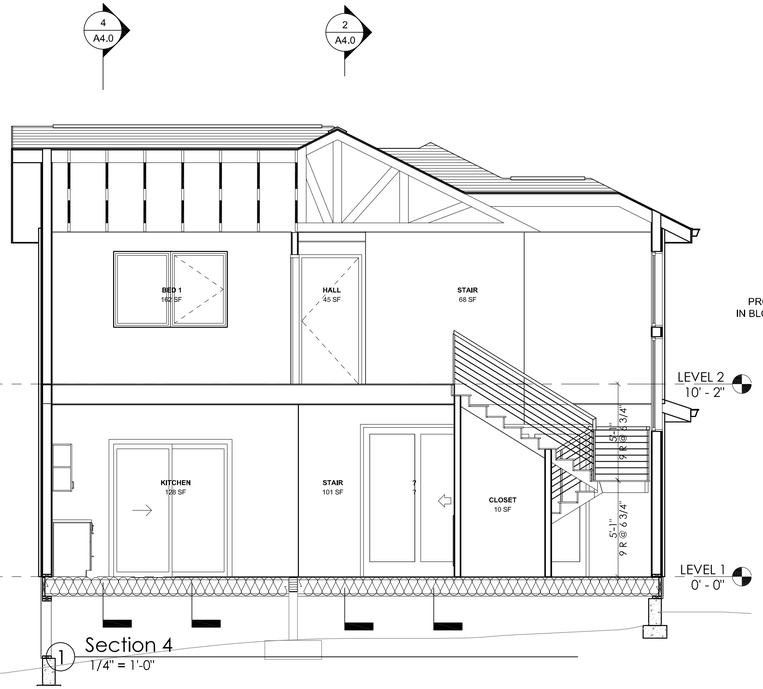

1 Section 4
1/4" = 1'-0"

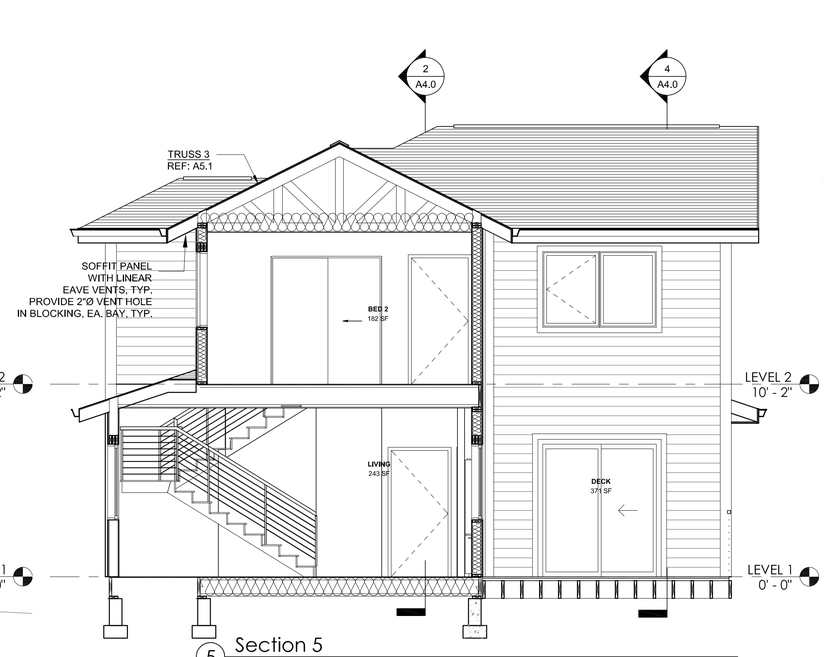

5 Section 5
1/4" = 1'-0"

FOR PERMIT 09/28/2018

MARK	DATE	DESCRIPTION

REGISTERED ARCHITECT
PHILIP H. SYDNOR
PORTLAND, OREGON
5822
STATE OF OREGON

TYP. BUILDING SECTIONS

PERMIT SET
09/28/2018
SINGLE FAMILY
RESIDENCES
1791 BLANKENSHIP ROAD
WEST LINN, OREGON 97068

A4.0

INTEGRATE
ARCHITECTURE & PLANNING
www.integratearch.com
© Integrate Architecture & Planning, p.c.

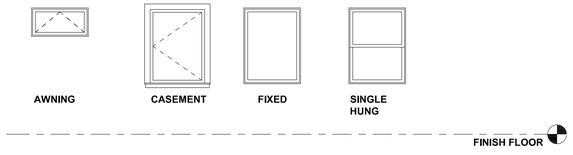

WINDOW TYPES
1/4" = 1'-0"

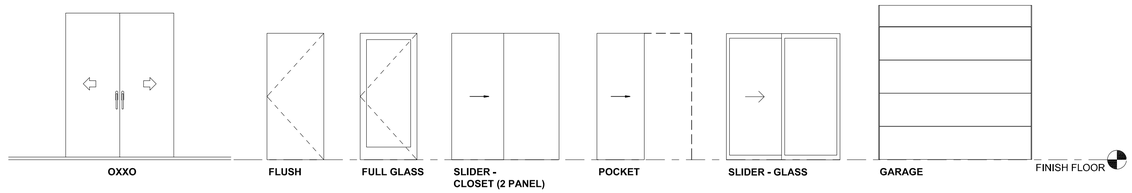

DOOR TYPES
1/4" = 1'-0"

WINDOW SCHEDULE UNIT A

MARK	Level	ROOM NAME	TYPE	SIZE			COMMENTS
				WIDTH	HEIGHT	SILL HT.	
LEVEL 1							
A1	LEVEL 1	POWDER	AWNING	3' - 0"	2' - 0"	5' - 0"	TEMPERED
A2	LEVEL 1	LAUNDRY	AWNING	3' - 0"	2' - 0"	5' - 0"	
C12	LEVEL 1	KITCHEN	CASEMENT	3' - 0"	4' - 0"	3' - 0"	
C13	LEVEL 1	KITCHEN	CASEMENT	3' - 0"	4' - 0"	3' - 0"	
C17	LEVEL 1	DECK	CASEMENT	3' - 0"	4' - 0"	3' - 0"	
F6	LEVEL 1	STAIR	FIXED	5' - 0"	5' - 0"	7' - 8"	
C3	LEVEL 1	LIVING	CASEMENT	3' - 0"	6' - 6"	1' - 6"	
F2	LEVEL 1	LIVING	FIXED	3' - 0"	6' - 6"	1' - 6"	
C4	LEVEL 1	LIVING	CASEMENT	3' - 0"	6' - 6"	1' - 6"	
F8	LEVEL 1	LIVING	FIXED	3' - 0"	4' - 0"	3' - 0"	
F9	LEVEL 1	LIVING	FIXED	3' - 0"	4' - 0"	3' - 0"	
F12	LEVEL 1	DINING	FIXED	7' - 0"	2' - 0"	5' - 0"	
LEVEL 2							
A3	LEVEL 2	MASTER BATH	AWNING	3' - 0"	2' - 0"	5' - 0"	TEMPERED
A4	LEVEL 2	MASTER BATH	AWNING	3' - 0"	2' - 0"	5' - 0"	TEMPERED
C1	LEVEL 2	BED 2	CASEMENT	3' - 0"	4' - 0"	3' - 0"	
C2	LEVEL 2	BED 2	CASEMENT	3' - 0"	4' - 0"	3' - 0"	
C5	LEVEL 2	BED 1	CASEMENT	3' - 0"	4' - 0"	3' - 0"	
C8	LEVEL 2	BED 2	CASEMENT	3' - 0"	4' - 0"	3' - 0"	
C9	LEVEL 2	BED 2	CASEMENT	3' - 0"	4' - 0"	3' - 0"	
C10	LEVEL 2	MASTER	CASEMENT	3' - 0"	4' - 0"	3' - 0"	
C11	LEVEL 2	MASTER	CASEMENT	3' - 0"	4' - 0"	3' - 0"	
F1	LEVEL 2	BED 2	FIXED	3' - 0"	4' - 0"	3' - 0"	
F3	LEVEL 2	BED 1	FIXED	3' - 0"	4' - 0"	3' - 0"	
F4	LEVEL 2	MASTER	FIXED	7' - 0"	2' - 0"	5' - 0"	
F5	LEVEL 2	STAIR	FIXED	5' - 0"	4' - 0"	3' - 0"	
F7	LEVEL 2	BED 2	FIXED	3' - 0"	4' - 0"	3' - 0"	
F10	LEVEL 2	MASTER	FIXED	3' - 0"	4' - 0"	3' - 0"	
F11	LEVEL 2	BED 1	FIXED	7' - 0"	2' - 0"	5' - 0"	

DOOR SCHEDULE UNIT A

MARK	ROOM NAME	TYPE	DIMENSIONS		
			WIDTH	HEIGHT	THICKNESS
LEVEL 1					
100	FOYER	GLASS FLUSH	3' - 0"	7' - 0"	0' - 1 1/2"
102	GARAGE	FLUSH	3' - 0"	6' - 8"	0' - 1 3/4"
103	HALL	SLIDER - CLOSET	4' - 6"	6' - 8"	0' - 1 1/2"
104	HALL	POCKET	2' - 6"	6' - 8"	0' - 1 1/2"
105	LAUNDRY	FLUSH	3' - 0"	6' - 8"	0' - 1 3/4"
106	GARAGE	GARAGE	10' - 0"	7' - 0"	0' - 1 1/2"
107	FOYER	FLUSH	2' - 10"	6' - 8"	0' - 1 3/4"
LEVEL 2					
200	BED 2	FLUSH	3' - 0"	6' - 8"	0' - 1 3/4"
202	BED 1	FLUSH	3' - 0"	6' - 8"	0' - 1 3/4"
203	CLOSET	SLIDER - CLOSET	4' - 6"	6' - 8"	0' - 1 1/2"
204	WC	FLUSH	2' - 10"	6' - 8"	0' - 1 3/4"
205	MASTER	FLUSH	2' - 10"	6' - 8"	0' - 1 3/4"
206	MASTER	FLUSH	2' - 10"	6' - 8"	0' - 1 3/4"
207	MASTER BATH	FLUSH	2' - 10"	6' - 8"	0' - 1 3/4"

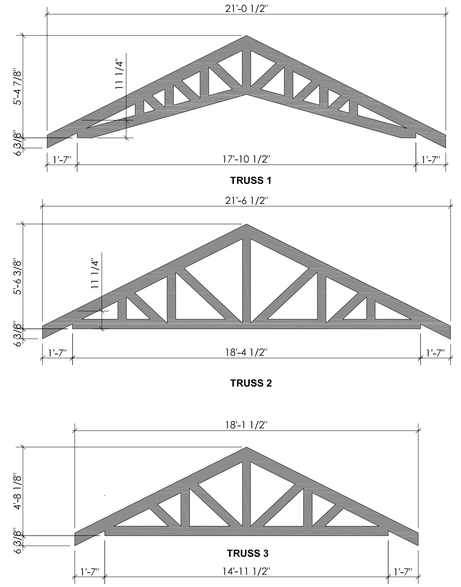

1 TRUSS SCHEDULE
1/4" = 1'-0"

FOR PERMIT 09/28/2018

MARK	DATE	DESCRIPTION

REGISTERED ARCHITECT
PHILIP H. SYDNOR
PORTLAND, OREGON
5822
STATE OF OREGON

TYP. SCHEDULES

PERMIT SET
09/28/2018
SINGLE FAMILY RESIDENCES
1791 BLANKENSHIP ROAD
WEST LINN, OREGON 97068

A5.0

INTEGRATE
ARCHITECTURE & PLANNING
www.integratearch.com
© Integrate Architecture & Planning, p.c.

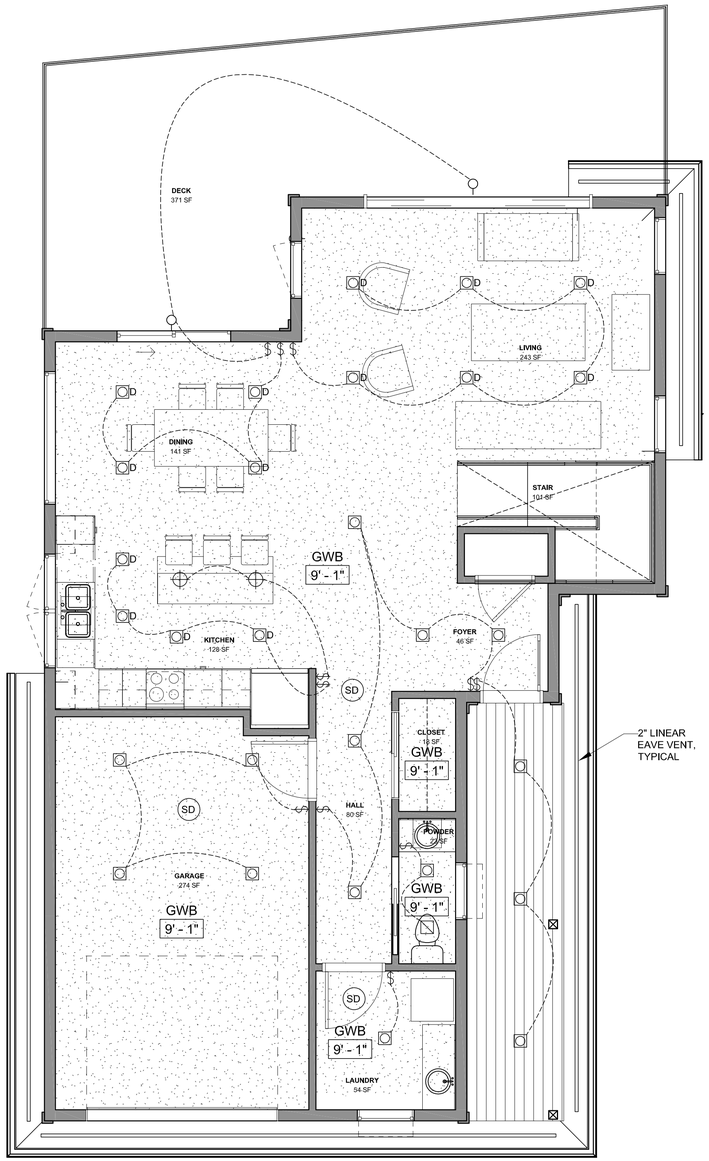

1 ENLARGED RCP - LEVEL 1
1/4" = 1'-0"

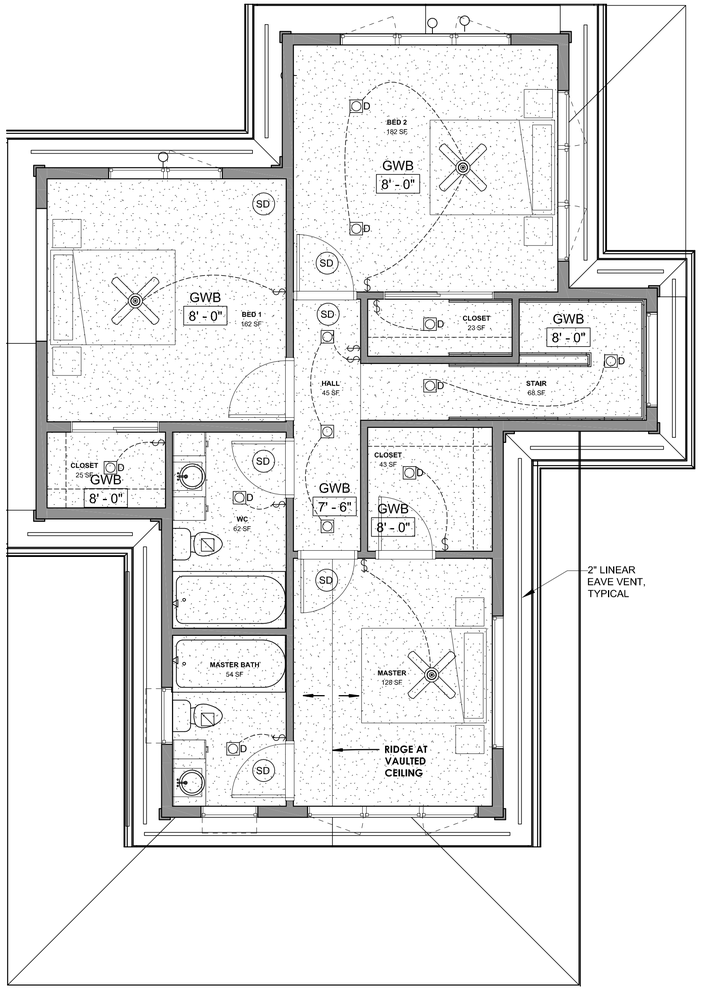

2 ENLARGED RCP - LEVEL 2
1/4" = 1'-0"

GENERAL NOTES

1. ALL CEILINGS ARE GYPSUM BOARD UNLESS OTHERWISE NOTED.
2. OUTLETS SHOWN ARE FOR SWITCHING PURPOSES. ALL OTHER OUTLETS TO BE LOCATED ACCORDING TO OREGON ELECTRICAL CODE. COORDINATE WITH OWNER FOR LOCATIONS.
3. PROVIDE SMOKE DETECTORS AS REQUIRED BY CODE
4. PROVIDE MECHANICAL VENTILATION IN FULL BATHROOMS PER ORSC, M1506.4

LEGEND

CEILING MATERIAL
1t
9'-0"
CEILING TAG
CEILING HEIGHT
GYPSUM BOARD CEILING
T & G CEDAR
RECESSED DOWNLIGHT
RECESSED DIRECTIONAL DOWNLIGHT
D RECESSED DOWNLIGHT, ON DIMMER
PENDANT LIGHT
EXHAUST FAN
FLUSH MOUNT LIGHT
UNDER CABINET LIGHTING
WALL MOUNT VANITY LIGHT
WALL SCONCE - SEE INTERIOR ELEVATION FOR MOUNTING HEIGHT
ELECTRICAL SWITCH
SMOKE/ CARBON MONOXIDE DETECTOR
CEILING FAN

FOR PERMIT 09/28/2018

MARK	DATE	DESCRIPTION

REGISTERED ARCHITECT
PHILIP H. SYDNOR
PORTLAND, OREGON
5822
STATE OF OREGON

TYP. REFLECTED CEILING PLANS

PERMIT SET
09/28/2018
SINGLE FAMILY RESIDENCES
1791 BLANKENSHIP ROAD
WEST LINN, OREGON 97068

A6.0

INTEGRATE
ARCHITECTURE & PLANNING
www.integratearch.com
© Integrate Architecture & Planning, p.c.

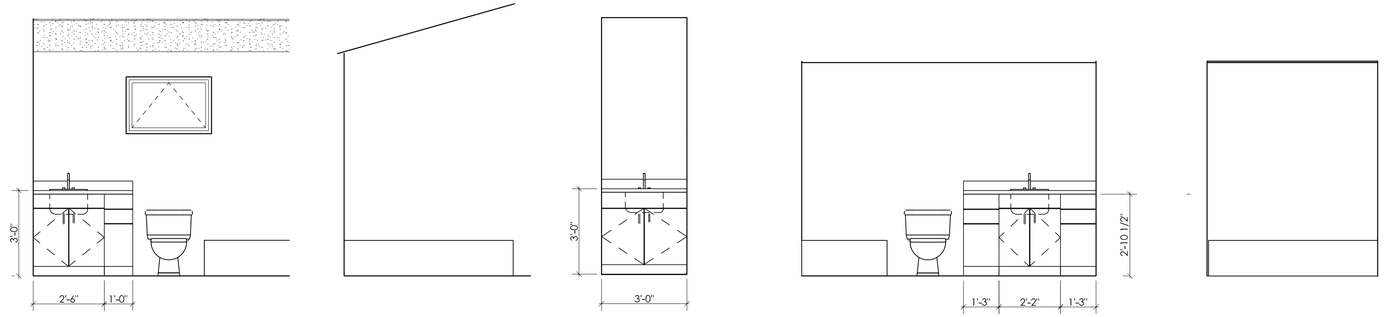

6 MASTER BATH 1
3/8" = 1'-0"

7 MASTER BATH 2
3/8" = 1'-0"

8 POWDER 1
3/8" = 1'-0"

9 WC 1
3/8" = 1'-0"

10 WC 2
3/8" = 1'-0"

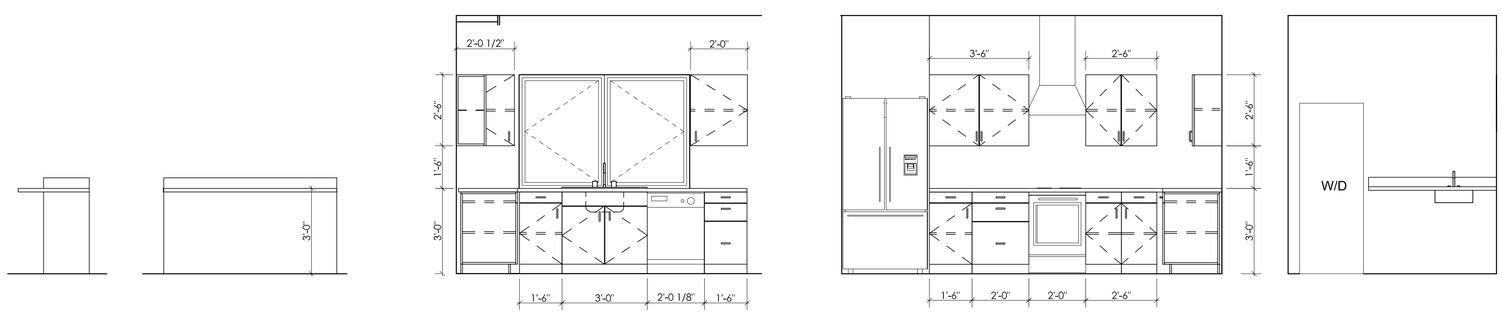

1 ISLAND 1
3/8" = 1'-0"

2 ISLAND 2
3/8" = 1'-0"

3 KITCHEN 1
3/8" = 1'-0"

4 KITCHEN 2
3/8" = 1'-0"

5 LAUNDRY 1
3/8" = 1'-0"

FOR PERMIT 09/28/2018

MARK	DATE	DESCRIPTION

REGISTERED ARCHITECT
PHILIP H. SYDNOR
PORTLAND, OREGON
5822
STATE OF OREGON

TYP. INTERIOR ELEVATIONS

PERMIT SET
09/28/2018
SINGLE FAMILY RESIDENCES
1791 BLANKENSHIP ROAD
WEST LINN, OREGON 97068

A7.0

INTEGRATE
ARCHITECTURE & PLANNING
www.integratearch.com
© Integrate Architecture & Planning, p.c.

STRUCTURAL NOTES

CODE: 2014 O.S.S.C. AND 2014 O.R.S.C.

DESIGN LOADS:

DEAD LOAD	- AS REQUIRED
LIVE LOAD	- 40 PSF
SNOW LOAD	- 25 PSF
SEISMIC	- D1 SEISMIC DESIGN CATEGORY PER O.R.S.C.
WIND:	- ASCE 7 120mph 3-SEC GUST EXP. B
SOIL BEARING	- 1500 PSF ASSUMED

EARTHWORK:

1. EXCAVATE TO LINES & LEVELS SHOWN ON DRAWINGS. ALL FOOTINGS TO BEAR ON FIRM UNDISTURBED NATIVE SANDS

CONCRETE:

1. REFERENCE SPECIFICATION - ACI 301, PLANT MIX PER ASTM C94.
2. STRENGTH:
   A. GROUND FLOOR SLAB - 3,000 PSI AT 28 DAYS
   B. FOOTINGS, WALLS 2,500 PSI @ 28 DAYS
3. REINFORCING - ASTM A615, GRADE 60. LAP BARS AS SHOWN ON PLAN WITH MIN. LAP OF 44 BAR DIAMETERS. PROVIDE 24" HOOKS AT CORNERS.
4. BOLTS:
   A. ANCHOR BOLTS - ASTM A307
   B. EXPANSION BOLTS - HILTI KWIK-BOLT-TZ. SPECIAL INSPECTION REQUIRED.
   C. ADHESIVE ANCHORS - HILTI-RE 500-SD OR SIMPSON SET-XP. SPECIAL INSPECTION REQUIRED.
5. COVER - AS FOLLOWS UNLESS SHOWN OTHERWISE ON PLANS.
   A. CONCRETE PLACED AGAINST EARTH - 3"
   B. FORMED CONCRETE AGAINST EARTH - 2".
   C. SECOND FLOOR SLAB - ¢
6. FINISH - PER ARCHITECT
7. SUBMITTALS: (4 COPIES)
   A. MIX DESIGNS PER IBC 1903
   B. REINFORCING SHOP DRAWINGS

CARPENTRY:

1. REFERENCE SPECIFICATION - IBC CHAPTER 23.
2. LUMBER - DOUGLAS FIR WITH MOISTURE CONTENT PER SPECIFICATION. ALL IN CONTACT WITH CONCRETE TO BE PRESSURE PRESERVATIVE TREATED. GRADE AS FOLLOWS
   A. POSTS AND BEAMS 6X AND GREATER - D.F. NO 1.
   B. POSTS AND BEAMS 4X SMALLER - D.F. NO 2 OR BETTER.
   C. STUDS - D.F. STUD GRADE OR BETTER
   D. PLATES & SILLS - DF NO. 2 P.T. AT CONCRETE SLAB.
   - KILN DRIED D.F. STANDARD TYPICAL
3. SHEATHING - PLYWOOD, ORIENTED STRANDBOARD OR APPROVED EQUAL.
   A. ROOF & WALL SHEATHING - APA 24/0. THICKNESS & NAILING PER PLAN.
   B. FLOOR SHEATHING - APA - 48/24. THICKNESS AND NAILING PER PLAN.
4. PLYWOOD WEB JOISTS- TRUS JOIST TJI SERIES OR APPROVED EQUAL. BRIDGING, BLOCKING & ERECTION BRACING PER MANUFACTURER'S RECOMMENDATION.
5. GLUE LAMINATED BEAMS - DOUGLAS FIR, COMBINATION 24F-V4, FABRICATED WITH WATER PROOF GLUE. FINISH PER PROJECT SPECIFICATIONS.
6. P.T. GLUE LAMINATED BEAMS - EWS 24F-V5MI / SP, FABRICATED WITH WATER PROOF GLUE. FINISH PER PROJECT SPECIFICATIONS.
7. GLUE LAMINATED COLUMNS - DOUGLAS FIR, COMBINATION 24F-V8, FABRICATED WITH WATER PROOF GLUE. FINISH PER PROJECT SPECIFICATIONS.
8. PARALLAM BEAMS - 2.0 E BY TRUS JOIST.
9. TIMBERSTRAND BEAMS - 3-1/2", 1.5E BY TRUS JOIST
10. TIMBERSTRAND BLOCKING - LSL 1-3/4" BY TRUS JOIST.
11. CONNECTIONS - SIMPSON STRONG-TIE OR USP, GALVANIZED.
12. FRAMING - PER INDUSTRY & CODE STANDARDS FOR ALL DETAILS NOT SHOWN. REFER TO IBC SECTIONS 2324, 2325 AND 2326.
13. NAILING - USE COMMON TYPE NAILS. MINIMUM NAILING PER IBC TABLE NO. 23-1-Q UNLESS NOTED OTHERWISE ON PLANS.

COMMON WIRE NAIL	PNEUMATIC NAIL DIAMETER	MINIMUM NAIL LENGTH	NAIL APPLICATION
30D COMMON	0.207"ø P-NAIL	4-1/2"	3X DECKING
40D COMMON	0.225"ø P-NAIL	5"	4X DECKING
20D COMMON	0.192"ø P-NAIL	4"	FRAMING
16D COMMON	0.162"ø P-NAIL	3-1/2"	FRAMING
10D COMMON	0.148"ø P-NAIL	3"	FRAMING
N/A	0.148"ø P-NAIL	2-3/8"	FLR SHEATHING
8D COMMON	0.131"ø P-NAIL	2-1/2"	ROOF SHEATHING
N/A	0.162"ø P-NAIL	3-1/2"	STRAPS

14. DRYING - PRIOR TO INSTALLATION OF GYPSUM WALL BOARD, DRY COMPLETED TO A MAXIMUM MOISTURE CONTENT OF 15%.
15. SUBMITTALS - SHOP DRAWINGS, 4 COPIES.
16. PREFABRICATED WOOD TRUSSES:
   A. REFERENCE STANDARD - ANSI / TPI 1
   B. PERFORMANCE REQUIREMENTS - PROVIDE WOOD TRUSSES DESIGNED AND FABRICATED TO SUPPORT THE LOADS SHOWN WITH A TOTAL LOAD DEFLECTION LESS THAN L/360.
   C. SUBMITTALS: (3 COPIES) STRUCTURAL CALCULATIONS STAMPED BY AN ENGINEER REGISTERED IN OREGON & SHOP DRAWINGS SHOWING ALL FABRICATION, ERECTION AND INSTALLATION DETAILS.
17. UNLESS NOTED OTHERWISE, ALL BEAMS & GIRDER TRUSSES TO BE SUPPORTED AT ENDS BY:
   A. MULTIPLE STUDS EQUAL TO BEAM WIDTH (TRIPLE STUD MIN) WHEN LOCATED IN WALL. CONTINUE ON ALL FLOORS DOWN TO FOUNDATION WITH SOLID BLOCKING AT FLOORS. CONN STUDS TOGETHER WITH 16D @ 12" O.C.
   B. SOLID POST EQUAL TO BEAM WIDTH WHEN FREE STANDING. EXTEND CONTINUOUS FOR FULL HEIGHT DOWN TO SOLID BEARING.

HOLDOWN SCHEDULE

MARK NUMBER	HOLDOWN	BOUNDARY STUDS	ANCHOR THCKN SLAB (6)	ANCHOR EXT. STEM WALL (6)
-	NO HOLDOWN REQ'D			
1.	HDU2	(2)2x	S6TB16	S6TB20
2.	HDU4	(2)2x	S6TB16	S6TB20
3.	HDU5	(2)2x	S6TB24	S6TB24
4.	HDU8	(3)2x	S6TB34	S6TB34
5.	HDU11	(1)6x	N/A	SB1x30 @ HDU11
6.	HDU14	(1)6x	N/A	SB1x30
7.	MSTC28	(2)2x	N/A	N/A
8.	MSTC40	(2)2x	N/A	N/A
9.	MSTC66	(2)2x	N/A	N/A
10.	2-MSTC66	(4)2x	N/A	N/A

NOTES:

1. INSTALL ALL HOLDOWNS PER MANUFACTURER SPECIFICATION PER C-C-2015 SIMPSON STRONG TIE CATALOG OR USP 34TH EDITION CATALOG.
2. MATCH STUDS ON SCHEDULE FOR WALLS BELOW ON ALL WALL TO WALL HOLDOWNS.
3. (2)2x OR (3)2x STUDS NAILED TOGETHER WITH (2) ROWS OF 16D @ 3" O.C. STAGGERED.
4. REFER TO SHEARWALL SCHEDULE AND TYPICAL SHEARWALL DETAILS FOR WALL LOCATIONS AND CONFIGURATIONS.
5. REFER TO SIMPSON OR USP CATALOGS FOR MINIMUM EMBED OF ANCHORS INTO CONCRETE.
6. USE S6TBL MODELS @ 3x SILL LOCATIONS.

SHEAR WALL SCHEDULE(1-13)

MARK	REF NOTES: (1,9) SHEATHING	Note: (2) NAIL SIZE	EDGE NAIL'G SPACING	FIELD NAIL'G SPACING	SILL TO CONCRETE CONNECTION, NOTE: (3)	SILL TO WOOD CONNECTION, Note (7)	SHEAR TRANSFER CLIPS (8)
A	7/16" OSB (1) SIDE (6)	8d	6"	12"	5/8" DIA. A.B. @ 48" O/C	16D @ 6" O/C	A35 OR RBC @ 24" O/C
B	7/16" OSB (1) SIDE (6)	8d	4"	12"	5/8" DIA. A.B. @ 36" O/C (12)	16D @ 4" O/C	A35 OR RBC @ 18" O/C
C	7/16" OSB (1) SIDE (5,6)	8d	3"	12"	5/8" DIA. A.B. @ 30" O/C (12)	16D @ 3" O/C	A35 OR RBC @ 12" O/C
D	7/16" OSB (1) SIDE (5,6)	8d	2"	12"	5/8" DIA. A.B. @ 24" O/C (12)	16D @ 2" O/C	A35 OR RBC @ 10" O/C
E	7/16" OSB (2) SIDES (4,5,6)	8d	4" STAGGERED	12"	5/8" DIA. A.B. @ 18" O/C (12)	16D @ 2" O/C	A35 OR RBC @ 7" O/C
F	7/16" OSB (2) SIDES (4,5,6)	8d	3" STAGGERED	12"	5/8" DIA. A.B. @ 15" O/C (12)	16D @ 3" O/C/2 ROWS STAGGERED	A35 OR RBC @ 5" O/C
G	7/16" OSB (2) SIDES (4,5,6)	8d	2" STAGGERED	12"	5/8" DIA. A.B. @ 12" O/C (12)	16D @ 2" O/C/2 ROWS STAGGERED	HGAI0KT @ 7" O/C

NOTES:

1) C-D, D-C SHEATHING, PLYWOOD PANEL SIDING AND OTHER GRADES COVERED IN PS1-95. ALL WALL CONSTRUCTION TO CONFORM TO OSSC TABLE 2306.4.1.
2) USE COMMON WIRE NAILS FOR ALL WOOD SHEATHING AND COOLER NAILS FOR GYPBOARD SHEATHING.
3) A.B. MINIMUM 7" EMBED INTO CONCRETE. 3"X3"X¼" PLATE WASHERS REQ'D AT ALL SHEAR WALL A.B.'s. N/A @ MASA ANCHORS.
4) PANEL JOINTS SHALL BE OFFSET TO FALL ON DIFFERENT FRAMING MEMBERS OR FRAMING SHALL BE 3X OR THICKER AND NAILS ON EACH SIDE SHALL BE STAGGERED.
5) 3X OR DBL 2X FRAMING AT ALL ADJOINING PANEL EDGES AND NAILS SHALL BE STAGGERED.
6) ALL EDGES BLOCKED.
7) COMMON WIRE NAILS.
8) CLIP TO BE ATTACHED FROM CONTINUOUS BLOCKING TO TOP OF CONTINUOUS TOP PLATES. CLIPS ARE NOT REQUIRED AT GYP BD WALLS BUT BLOCKING IS ATTACHED PER THE TOENAILING SCHEDULE.
9) SEE ATTACHED TYPICAL SHEARWALL DETAILS.
10) SHEATHING TO BE STRUCTURAL 1 SHEATHING.
11) VALUES ARE FOR FRAMING OF H-F.
12) SEE PLAN FOR WALLS WHERE SEISMIC DESIGN SHEAR IS GREATER THAN 350 PLF (ASD). 3X OR DBL 2X AT PANEL EDGES AND SILL. STAGGER NAILS. NAIL AND GLUE DBL 2X SILL TOGETHER W/ 10D GALVANIZED @ 4" O/C STAGGERED, OR USE A 3X. FOR WALLS WITH THE LARGER SILLS, ANCHOR BOLT SPACING MAY BE INCREASED BY A FACTOR OF 1.25 FROM THE TABLE ABOVE DUE TO THICKER SILLS.
13) 7/16" PLY IS ACCEPTABLE IN LIEU OF 7/16" OSB.

FOR PERMIT 09/28/2018

REGISTERED PROFESSIONAL ENGINEER
51319PE
OREGON
JAN. 12, 1995
DAVID J. HORN

Expires: 6-30-19

HCE
Horn Consulting Engineers, LLC
9320 SW Barbur Blvd. Ste 235 Portland, OR 97219
Phone: 503.892.5782 Email: dave@hornce.com

DISCLAIMER: THE SIGNATURE AND STAMP FOR THESE STRUCTURAL DRAWINGS ARE VALID ONLY WHEN ACCOMPANIED BY A DOCUMENT AND SET SPECIFIC SET OF STRUCTURAL CALCULATIONS PREPARED BY HORN CONSULTING ENGINEERS LLC AND SEALED WITH A WET STAMP AND SIGNATURE BY THE ENGINEER WHOSE STAMP APPEARS ON THIS SHEET. CONSTRUCTION SHALL BE PERFORMED ONLY WITH A DRAWING SET APPROVED BY THE LOCAL JURISDICTION.

PARCEL 3
1791 BLANKENSHIP RD
WEST LINN, OR 97068

SHEAR WALL & HOLDOWN SCHEDULES / STRUCTURAL NOTES

REVISIONS:	
DATE:	9.27.18
SCALE:	
DRAWN:	LY
JOB NO:	1A-18-03

S0

ORIGINAL SHEET SIZE: 22x34

LEGEND

- INDICATES WALL ABOVE FRAMING LEVEL
- INDICATES WALL BELOW FRAMING LEVEL
- INDICATES INTERIOR BEARING WALL BELOW FRAMING LEVEL
- INDICATES COLUMN ABOVE
- INDICATES COLUMN BELOW FRAMING LEVEL
- INDICATES DETAIL REFERENCE APPLIES TO ALL SIMILAR LOCATIONS
- HDUx (x) HOLDOWN TYPE & SCHEDULE MARK NUMBER (x) ON SHT S0

1/S1.1 FOUNDATION / MAIN FLOOR FRAMING PLAN

SCALE: 1/4"=1'-0"

FOR PERMIT

09/28/2018

REGISTERED PROFESSIONAL ENGINEER 51319PE OREGON JAN. 12, 1999 DAVID J. HORN

Expires: 6-30-19

HCE
Horn Consulting Engineers LLC
9320 SW Barbur Blvd, Ste 135 Portland, OR 97219
Phone: 503.892.5782 Email: dave@hornce.com

DISCLAIMER: THE SIGNATURE AND STAMP FOR THESE STRUCTURAL DRAWINGS ARE VALID ONLY WHEN ACCOMPANIED BY A DEVELOPMENT AND LOT SPECIFIC SET OF STRUCTURAL CALCULATIONS PREPARED BY HORN CONSULTING ENGINEERS LLC AND SEALED WITH A WET STAMP AND SIGNATURE BY THE ENGINEER WHOSE STAMP APPEARS ON THIS SHEET. CONSTRUCTION SHALL BE PERFORMED ONLY WITH A DRAWING SET APPROVED BY THE LOCAL JURISDICTION.

PARCEL 3
1791 BLANKENSHIP RD
WEST LINN, OR 97068

FOUNDATION / MAIN FLOOR FRAMING PLAN

REVISIONS:

DATE:	9.27.18
SCALE:	1/4" = 1'-0"
DRAWN:	LY
JOB NO:	1A-18-03

S1.1

ORIGINAL SHEET SIZE: 22x34

LEGEND

- INDICATES ROOF OVERFRAMING
- INDICATES WALL BELOW FRAMING LEVEL
- INDICATES INTERIOR BEARING WALL BELOW FRAMING LEVEL
- INDICATES COLUMN BELOW FRAMING LEVEL
- INDICATES DETAIL REFERENCE APPLIES TO ALL SIMILAR LOCATIONS
- INDICATES VAULTED AREA
- EXTENT OF SHEARWALL SHEATHING SEGMENT
- INDICATES SHEARWALL TYPE PER SCHEDULE SHT SO
- INDICATES HOLDOWN TYPE. 1 @ EA END OF WALL SEGMENT PER SCHEDULE SHT SO

TRUSS NOTES:

- ALL TRUSSES TO BE PRE-ENGINEERED & CARRY MANUFACTURER'S STAMP.
- ALL TRUSSES SHALL BE INSTALLED & BRACED TO MANUFACTURER'S SPECIFICATIONS.
- NON-BEARING WALLS SHALL BE CONNECTED TO THE TRUSS BOTTOM CHORD W/ SIMPSON STC (OR EQ.) TO INSURE THAT THE TRUSS BOTTOM CHORD WILL NOT BEAR ON THE WALL.
- ALL CONNECTIONS WITH RAFTERS, MONO OR JACK TRUSSES & HIP TRUSSES TO MAIN GIRDER TO BE PROVIDED BY THE TRUSS MANUFACTURER.
- TRUSS LAYOUT SHOWING GIRDER TRUSS LOCATIONS ARE NOT PERMITTED TO CHANGE & MUST BE FOLLOWED CORRECTLY. IF TRUSS MANUFACTURER REQUESTS TO CHANGE IN PART OR IN WHOLE THE LAYOUT DESIGNED HEREIN, HE/SHE MUST CONTACT THE DESIGNER TO INSURE STRUCTURAL DESIGN IS MAINTAINED ON THE BUILDING CORRECTLY. ALSO, IF THE DESIGN LAYOUT IS DETERMINED TO CHANGE, THE BUILDING DEPARTMENT WILL REQUIRE APPROVAL & NEW ENGINEERING CALC'S.
- ADD SOLID BLK'G BETWEEN JOISTS UNDER POINT LOADS ABV. - WHERE APPLICABLE AT WLL.
- PROVIDE SOLID BEARING UNDER GIRDER TRUSS ENDS & FROM BEARING POINTS UNDER STRUCTURAL ROOF BEAMS AS SHOWN ON PLANS.
- PROVIDE SOLID BEARING UNDER BEAM ENDS & FROM BRG. POINTS TRANSFERRED DOWN FROM FLOOR ABV. CONT. TO FTG. BLW AS LOCATED ON PLANS.

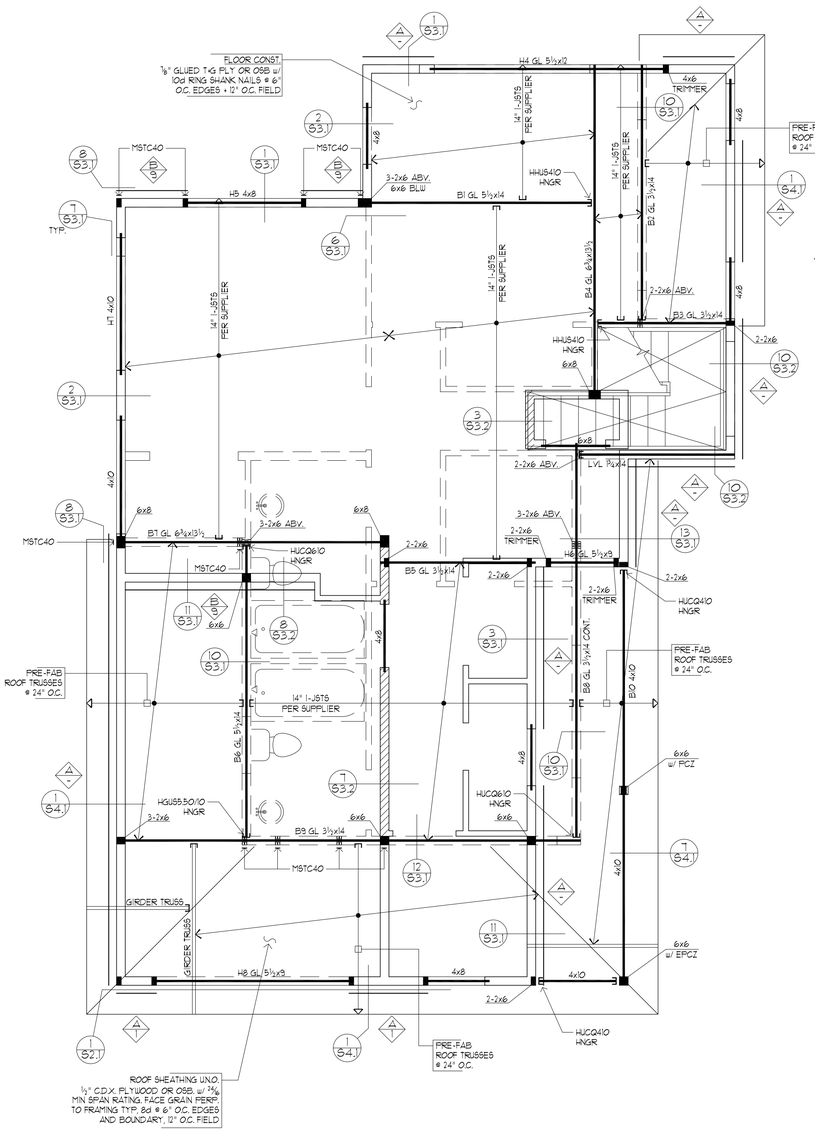

1 S1.2 UPPER FLOOR FRAMING / MAIN FLOOR SHEAR WALL PLAN

SCALE: 1/4"=1'-0"

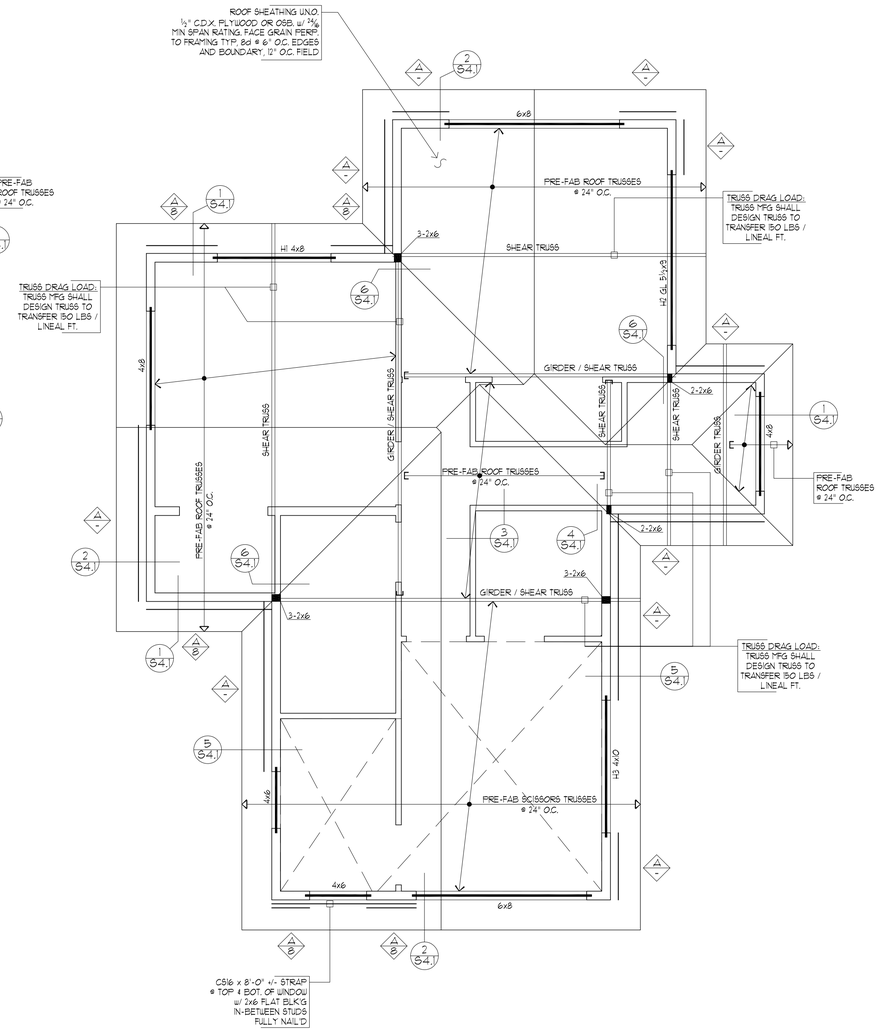

2 S1.2 ROOF FRAMING / UPPER FLOOR SHEAR WALL PLAN

SCALE: 1/4"=1'-0"

FOR PERMIT 09/28/2018

REGISTERED PROFESSIONAL ENGINEER
51319PE
OREGON
JAN. 12, 1995
DAVID J. HORN
Expires: 6-30-19

HCE
Horn Consulting Engineers LLC
9320 SW Barbur Blvd. Ste 235 Portland, OR 97219
Phone: 503.892.5782 Email: dave@hornce.com

DISCLAIMER: THE SIGNATURE AND STAMP FOR THESE STRUCTURAL DRAWINGS ARE VALID ONLY WHEN ACCOMPANIED BY A DEVELOPMENT AND SITE SPECIFIC SET OF STRUCTURAL CALCULATIONS PREPARED BY HORN CONSULTING ENGINEERS LLC AND SEALED WITH A WET STAMP AND SIGNATURE BY THE ENGINEER WHOSE STAMP APPEARS ON THIS SHEET. CONSTRUCTION SHALL BE PERFORMED ONLY WITH A DRAWING SET APPROVED BY THE LOCAL JURISDICTION.

PARCEL 3
1191 BLANKENSHIP RD
WEST LINN, OR 97068

UPPER FLOOR FRAMING / MAIN FLOOR SHEAR WALL / ROOF FRAMING / UPPER FLOOR SHEAR WALL PLANS

REVISIONS:	
DATE:	9.27.18
SCALE:	¼" = 1'-0"
DRAWN:	LY
JOB NO:	1A-18-03

S1.2

ORIGINAL SHEET SIZE: 22x34

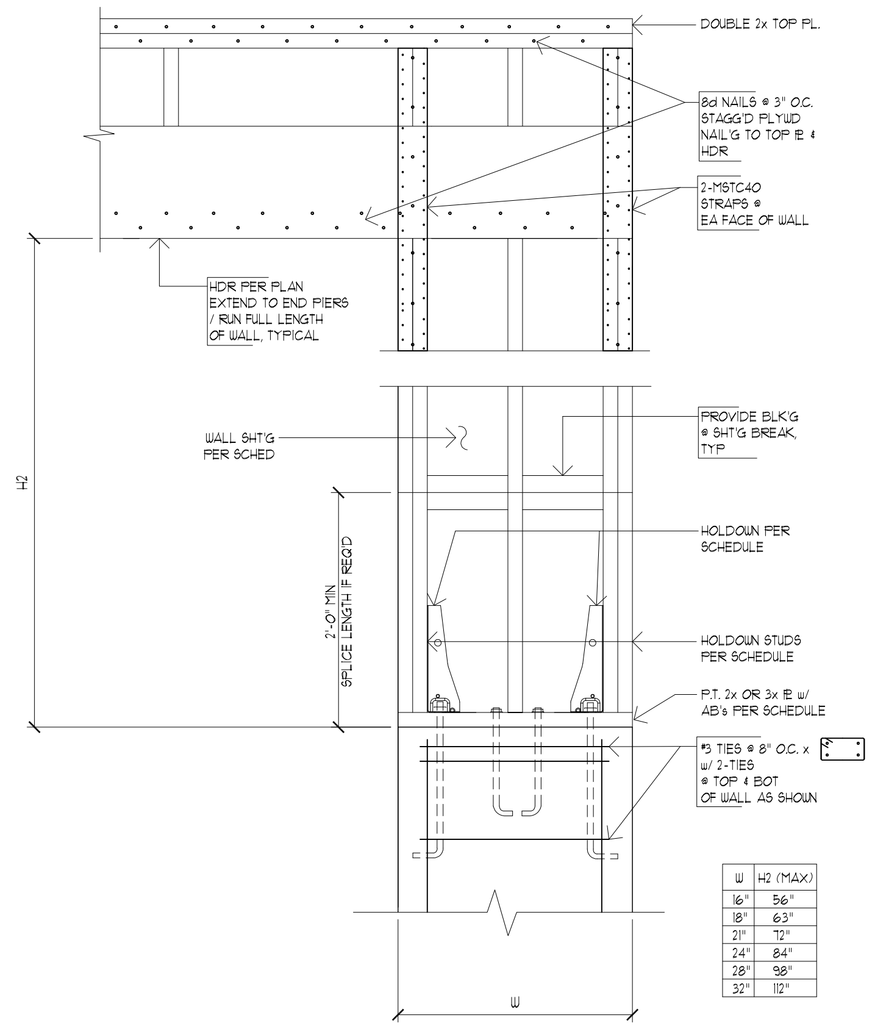

1 GARAGE WING FRAMING (LOW HEADER)

SCALE: 1"=1'-0"

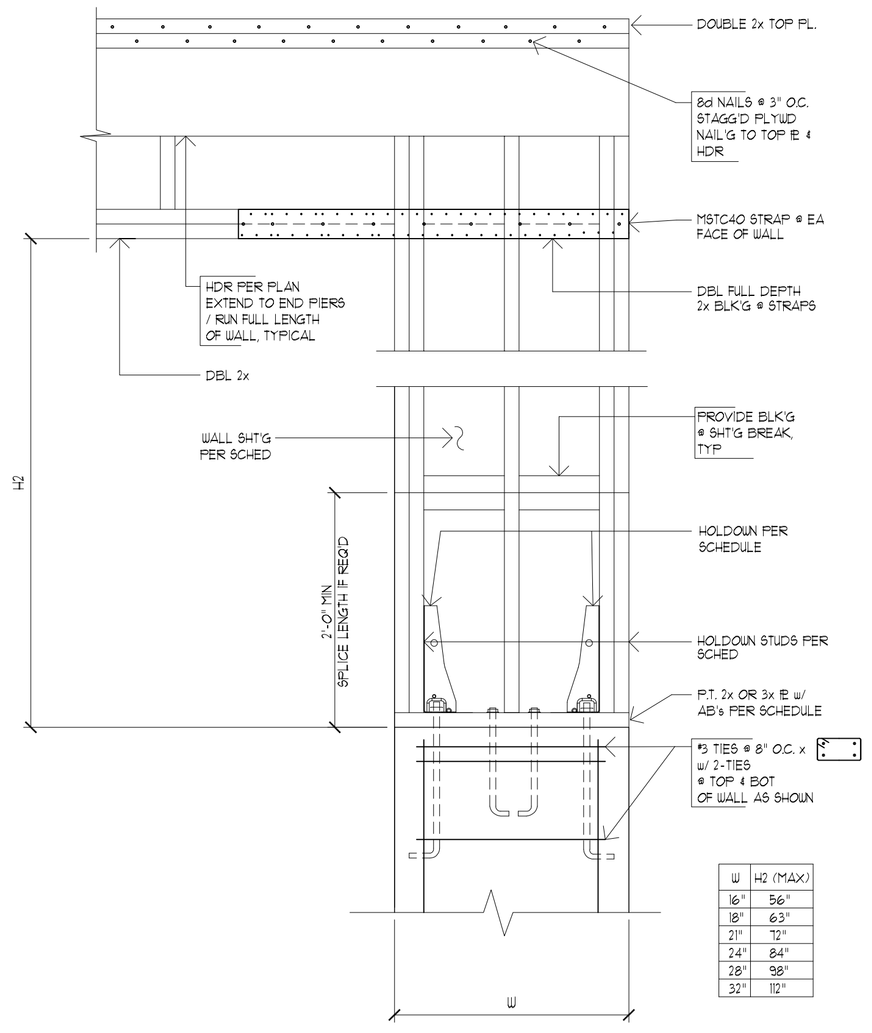

GARAGE WING FRAMING (RAISED HEADER)

SCALE: 1"=1'-0"

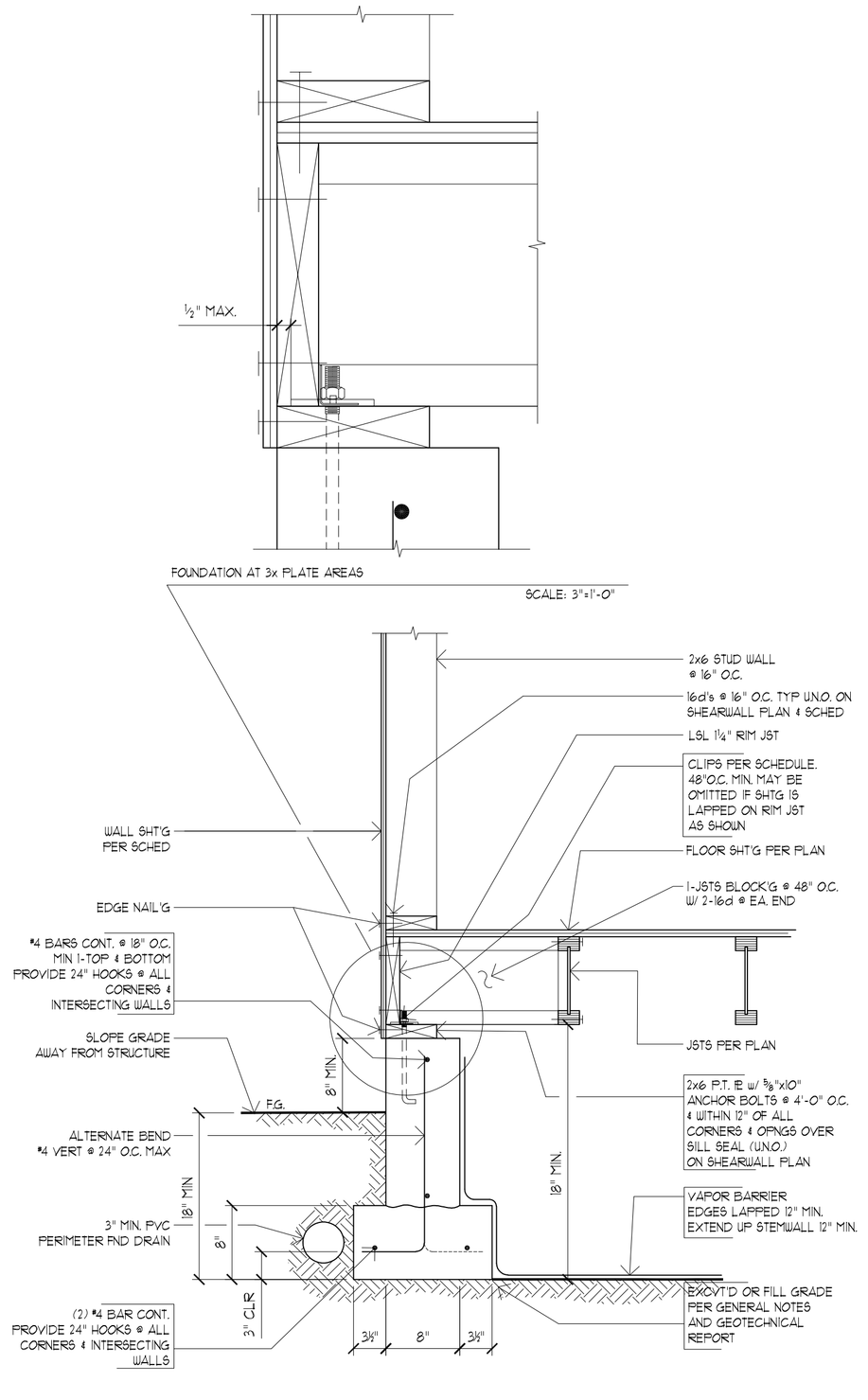

2 FOUNDATION @ 2 STORY STRUCTURE W/ PARALLEL JSTS

NOTE: ENGINEERED CONC. WALL REQ. IF BACKFILL AGAINST WALL EXCEEDS 48" IN HEIGHT

SCALE: 1"=1'-0"

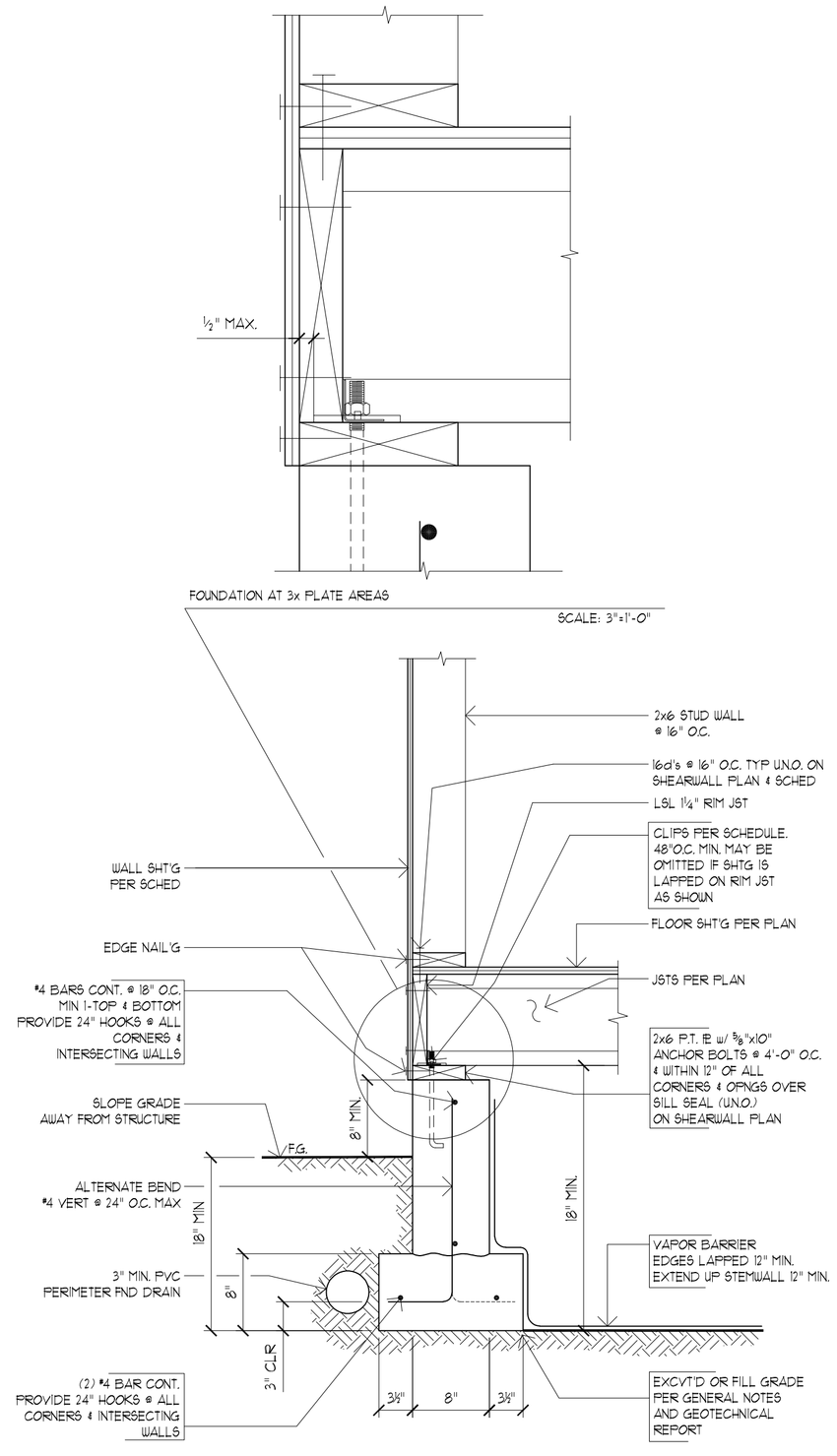

3 FOUNDATION @ 2 STORY STRUCTURE W/ PERP JSTS

NOTE: ENGINEERED CONC. WALL REQ. IF BACKFILL AGAINST WALL EXCEEDS 48" IN HEIGHT

SCALE: 1"=1'-0"

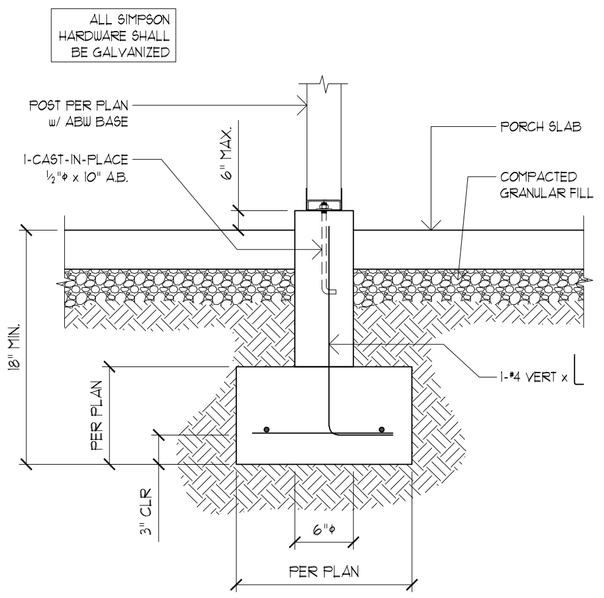

4 FRONT PORCH POST / FTG

SCALE: 1"=1'-0"

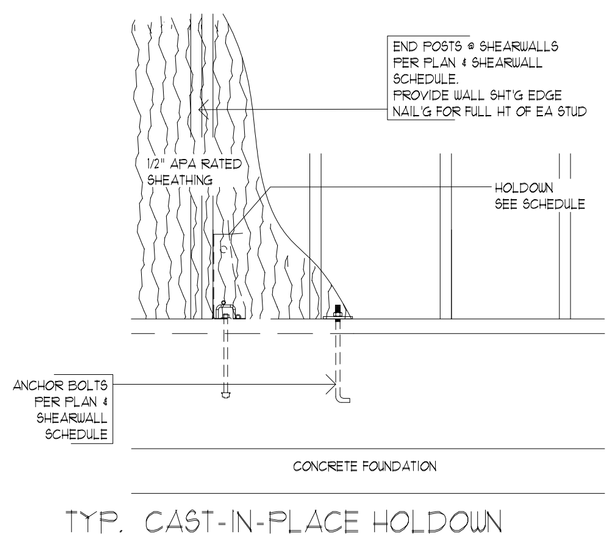

5 TYP. CAST-IN-PLACE HOLDOWN @ STEM WALL

SCALE: 1"=1'-0"

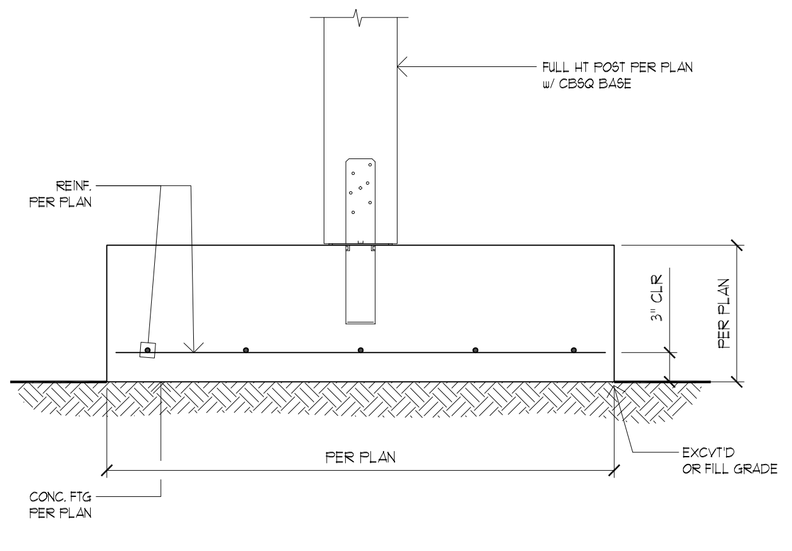

6 POST CONNECTION @ FOOTING

SCALE: 1"=1'-0"

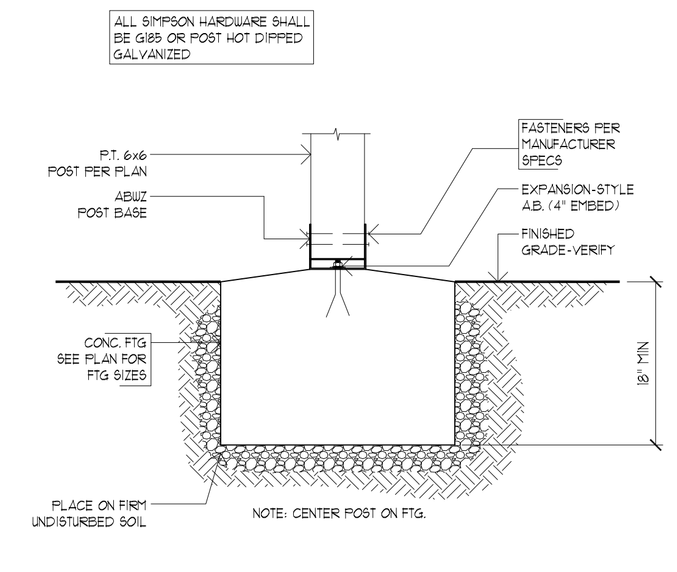

7 FOOTING DETAIL

SCALE: N.T.S.

FOR PERMIT 09/28/2018

REGISTERED PROFESSIONAL ENGINEER
51319PE
OREGON
JAN. 12, 1995
DAVID J. HORN
Expires: 6-30-19

HCE
Horn Consulting Engineers LLC
9320 SW Barbur Blvd. Ste 235 Portland, OR 97219
Phone: 503.892.5782 Email: dave@hornce.com

DISCLAIMER: THE SIGNATURE AND STAMP FOR THESE STRUCTURAL DRAWINGS ARE VALID ONLY WHEN ACCOMPANIED BY A DEVELOPMENT AND SITE SPECIFIC SET OF STRUCTURAL CALCULATIONS PREPARED BY HORN CONSULTING ENGINEERS LLC AND SEALED WITH A WET STAMP AND SIGNATURE BY THE ENGINEER WHOSE STAMP APPEARS ON THIS SHEET. CONSTRUCTION SHALL BE PERFORMED ONLY WITH A DRAWING SET APPROVED BY THE LOCAL JURISDICTION.

PARCEL 3
1791 BLANKENSHIP RD
WEST LINN, OR 97068

DETAILS

REVISIONS:	
DATE:	9.27.18
SCALE:	1" = 1'-0"
DRAWN:	LY
JOB NO:	1A-18-03

S2.1

ORIGINAL SHEET SIZE: 22x34

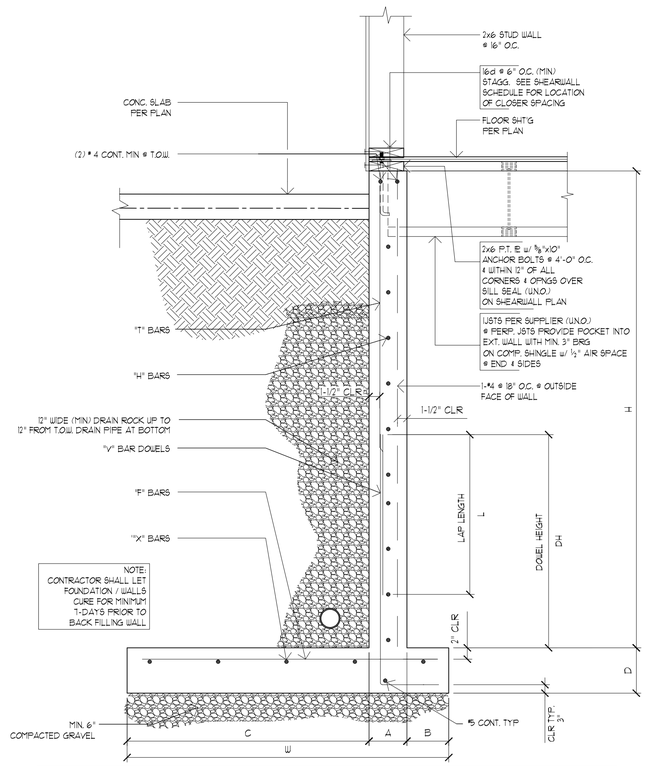

CANTILEVERED RETAINING WALL SCHEDULE												
GENERIC RETAINING WALL FOR STANDARD PRACTICE VALUES												
H(FT.)	W	A	B	C	D	"V"BARS	"H"BARS	"F"BARS	"X"BARS	"T"BARS	LAP LENGTH L	DOWEL HEIGHT DH
5'-0"	4'-0"	8"	1'-3"	2'-1"	12"	#4@13"O/C	#4@12"O/C	N / A	#4@18"O/C			
6'-0"	5'-3"	8"	1'-6"	3'-1"	12"	#4@11½"O/C	#4@12"O/C	#4@18"O/C	#4@18"O/C			
7'-0"	6'-6"	8"	2'-0"	3'-10"	14"	#4@9"O/C	#4@12"O/C	#4@12"O/C	#4@18"O/C	#4@18"O/C	36"	39"
8'-0"	7'-6"	8"	2'-0"	4'-10"	12"	#4@6½"O/C	#4@12"O/C	#5@12"O/C	#5@18"O/C	#4@18"O/C	36"	39"
9'-0"	8'-3"	10"	2'-0"	5'-5"	14"	#5@9½"O/C	#5@12"O/C	#5@12"O/C	#5@18"O/C	#4@18"O/C	36"	39"
10'-0"	9'-6"	10"	2'-6"	6'-2"	14"	#5@7"O/C	#5@12"O/C	#5@12"O/C	#5@18"O/C	#4@18"O/C	36"	39"
11'-0"	10'-6"	10"	2'-9"	6'-11"	14"	#5@5"O/C	#5@12"O/C	#5@9"O/C	#5@18"O/C	#4@18"O/C	36"	39"
12'-0"	11'-3"	12"	2'-9"	7'-6"	14"	#5@5"O/C	#5@12"O/C	#5@8"O/C	#5@18"O/C	#4@18"O/C	36"	39"

NOTES:
1. DESIGN VALUES ARE BASED ON CARLSON GEOTECHNICAL REPORT #31404109
2. ALLOWABLE SOIL BEARING = 1500 PSF, PASSIVE = 250 PSF / FT, IGNORE TOP 12", FRICTION = .45
3. FOOTING AND WALL F'c = 2500 PSF @ 28 DAYS, Fy = 60KSI
4. GEOTECH TO VERIFY BY SITE OBSERVATION AND SIGN OFF ON RETAINING WALL DESIGN ASSUMPTIONS PRIOR TO CONCRETE POUR AS PER SOILS REPORT AND JURISDICTIONAL REQUIREMENTS. SEE PROJECTS SOIL REPORT. GEOTECH SITE VISIT REPORTS TO BE COPIED TO HCE.
5. IF NO "T" BARS ARE SHOWN AND NO DIMENSION IS SHOWN IN THE TABLE ABOVE FOR DOWEL HEIGHT DH, EXTEND THE "V" BAR DOWEL FROM THE FOOTING TO THE TOP OF THE WALL.

1 CANTILEVERED RETAINING WALL

SCALE: N.T.S.

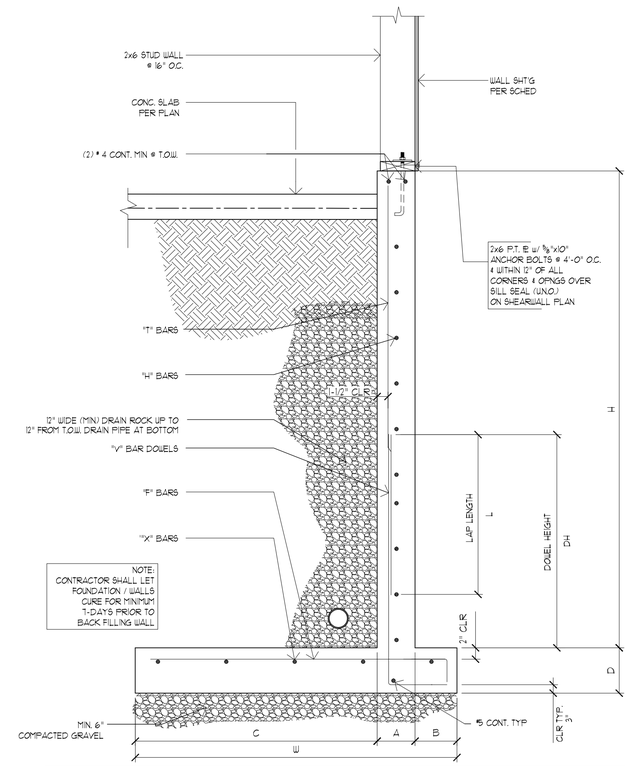

CANTILEVERED RETAINING WALL SCHEDULE												
GENERIC RETAINING WALL FOR STANDARD PRACTICE VALUES												
H(FT.)	W	A	B	C	D	"V"BARS	"H"BARS	"F"BARS	"X"BARS	"T"BARS	LAP LENGTH L	DOWEL HEIGHT DH
5'-0"	4'-0"	8"	1'-3"	2'-1"	12"	#4@13"O/C	#4@12"O/C	N / A	#4@18"O/C			
6'-0"	5'-3"	8"	1'-6"	3'-1"	12"	#4@11½"O/C	#4@12"O/C	#4@18"O/C	#4@18"O/C			
7'-0"	6'-6"	8"	2'-0"	3'-10"	14"	#4@9"O/C	#4@12"O/C	#4@12"O/C	#4@18"O/C	#4@18"O/C	36"	39"
8'-0"	7'-6"	8"	2'-0"	4'-10"	12"	#4@6½"O/C	#4@12"O/C	#5@12"O/C	#5@18"O/C	#4@18"O/C	36"	39"
9'-0"	8'-3"	10"	2'-0"	5'-5"	14"	#5@9½"O/C	#5@12"O/C	#5@12"O/C	#5@18"O/C	#4@18"O/C	36"	39"
10'-0"	9'-6"	10"	2'-6"	6'-2"	14"	#5@7"O/C	#5@12"O/C	#5@12"O/C	#5@18"O/C	#4@18"O/C	36"	39"
11'-0"	10'-6"	10"	2'-9"	6'-11"	14"	#5@5"O/C	#5@12"O/C	#5@9"O/C	#5@18"O/C	#4@18"O/C	36"	39"
12'-0"	11'-3"	12"	2'-9"	7'-6"	14"	#5@5"O/C	#5@12"O/C	#5@8"O/C	#5@18"O/C	#4@18"O/C	36"	39"

NOTES:
1. DESIGN VALUES ARE BASED ON CARLSON GEOTECHNICAL REPORT #31404109
2. ALLOWABLE SOIL BEARING = 1500 PSF, PASSIVE = 250 PSF / FT, IGNORE TOP 12", FRICTION = .45
3. FOOTING AND WALL F'c = 2500 PSF @ 28 DAYS, Fy = 60KSI
4. GEOTECH TO VERIFY BY SITE OBSERVATION AND SIGN OFF ON RETAINING WALL DESIGN ASSUMPTIONS PRIOR TO CONCRETE POUR AS PER SOILS REPORT AND JURISDICTIONAL REQUIREMENTS. SEE PROJECTS SOIL REPORT. GEOTECH SITE VISIT REPORTS TO BE COPIED TO HCE.
5. IF NO "T" BARS ARE SHOWN AND NO DIMENSION IS SHOWN IN THE TABLE ABOVE FOR DOWEL HEIGHT DH, EXTEND THE "V" BAR DOWEL FROM THE FOOTING TO THE TOP OF THE WALL.

2 CANTILEVERED RETAINING WALL

SCALE: N.T.S.

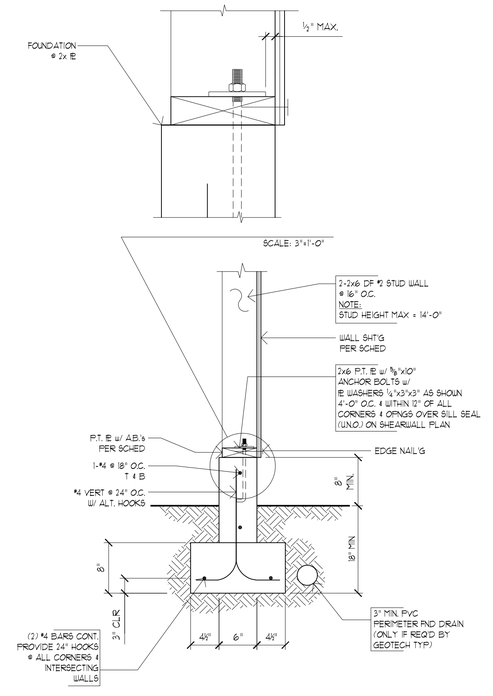

3 FOUNDATION / PONY WALL

SCALE: 1"=1'-0"

FOR PERMIT 09/28/2018

REGISTERED PROFESSIONAL ENGINEER
51319PE
OREGON
JAN. 12, 1995
DAVID J. HORN
Expires: 6-30-19

HCE
Horn Consulting Engineers LLC
9320 SW Barbur Blvd, Ste 235 Portland, OR 97219
Phone: 503.892.5782 Email: dave@hornce.com

DISCLAIMER: THE SIGNATURE AND STAMP FOR THESE STRUCTURAL DRAWINGS ARE VALID ONLY WHEN ACCOMPANIED BY A COMPLIMENTARY AND SITE SPECIFIC SET OF STRUCTURAL CALCULATIONS PREPARED BY HORN CONSULTING ENGINEERS LLC AND SEALED WITH A WET STAMP AND SIGNATURE BY THE ENGINEER WHOSE STAMP APPEARS ON THIS SHEET. CONSTRUCTION SHALL BE PERFORMED ONLY WITH A DRAWING SET APPROVED BY THE LOCAL JURISDICTION.

PARCEL 3
1791 BLANKENSHIP RD
WEST LINN, OR 97068

DETAILS

REVISIONS:

DATE:	9.27.18
SCALE:	1" = 1'-0"
DRAWN:	LY
JOB NO:	1A-18-03

S2.2

ORIGINAL SHEET SIZE: 22x34

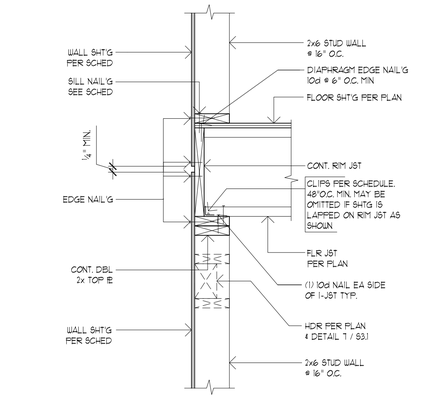

1 PERP. TJI FLR JSTS TO STUD WALL

SCALE: 1"=1'-0"

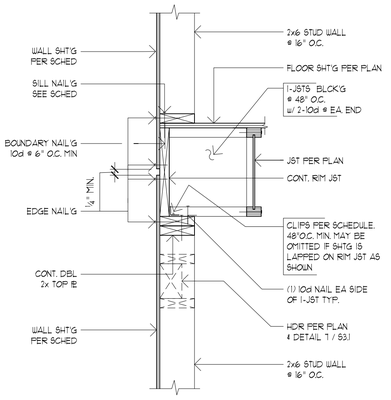

2 PARALLEL TJI FLR JSTS TO STUD WALL

SCALE: 1"=1'-0"

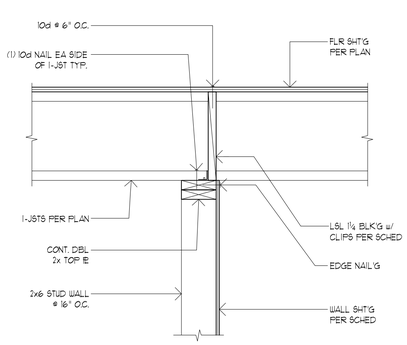

3 TYP. FLOOR TO SHEAR WALL CONN.

SCALE: 1"=1'-0"

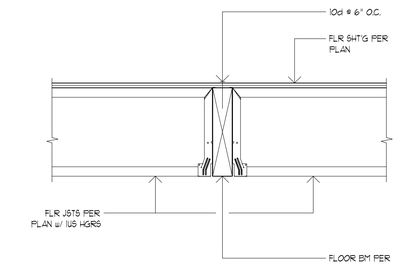

4 TYP. FLR JSTS TO FLUSH BM

SCALE: 1"=1'-0"

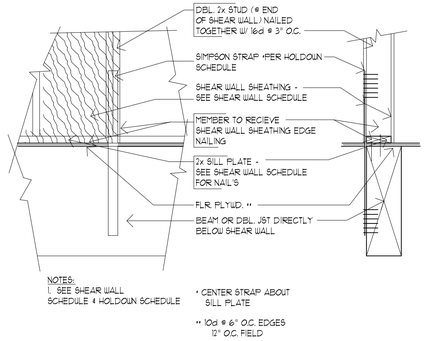

5 TIE STRAP @ BEAM

SCALE: 1"=1'-0"

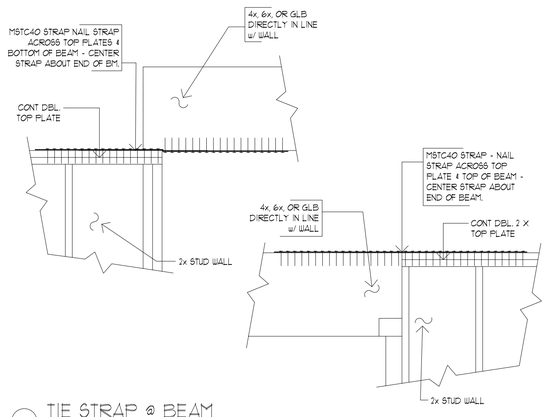

6 TIE STRAP @ BEAM

SCALE: 1"=1'-0"

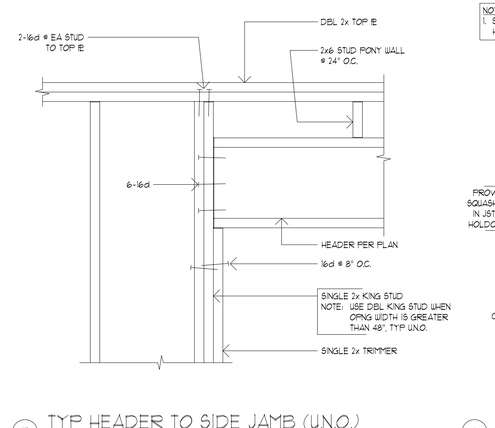

7 TYP HEADER TO SIDE JAMB (U.N.O.)

SCALE: 1"=1'-0"

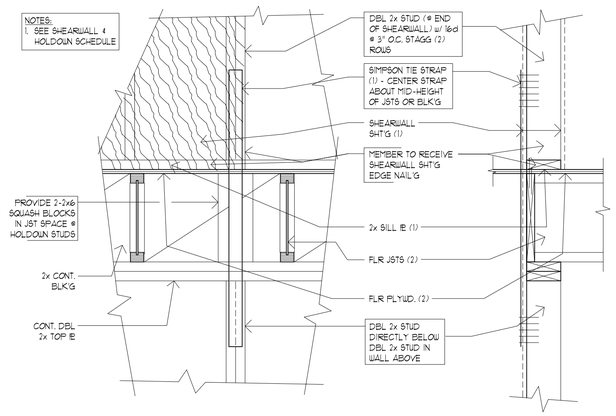

8 TIE STRAP HOLDOWN

SCALE: 1"=1'-0"

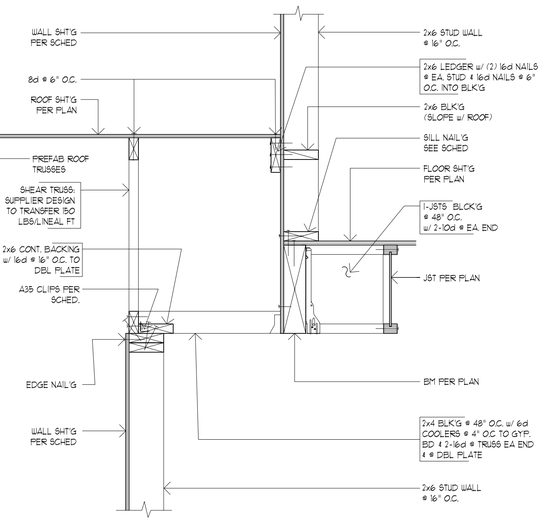

9 PARALLEL ROOF TRUSS @ SHEARWALL

SCALE: 1"=1'-0"

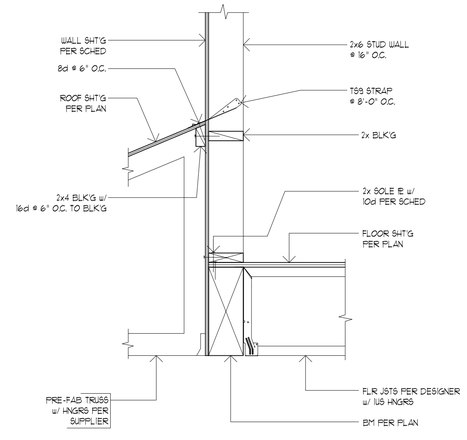

10 SHEARWALL @ BM / JST / TRUSSES

SCALE: 1"=1'-0"

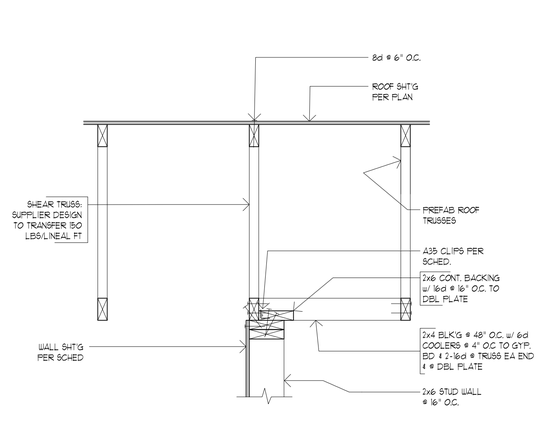

11 PARALLEL ROOF TRUSS @ SHEARWALL

SCALE: 1"=1'-0"

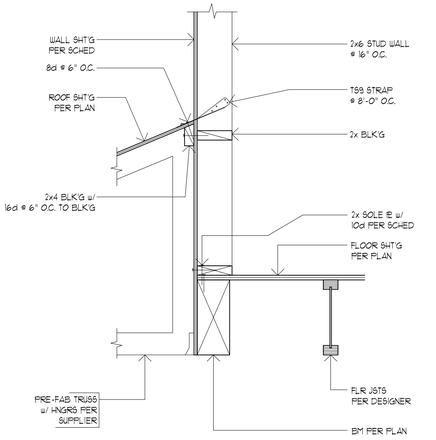

12 SHEARWALL @ BM / JST / TRUSSES

SCALE: 1"=1'-0"

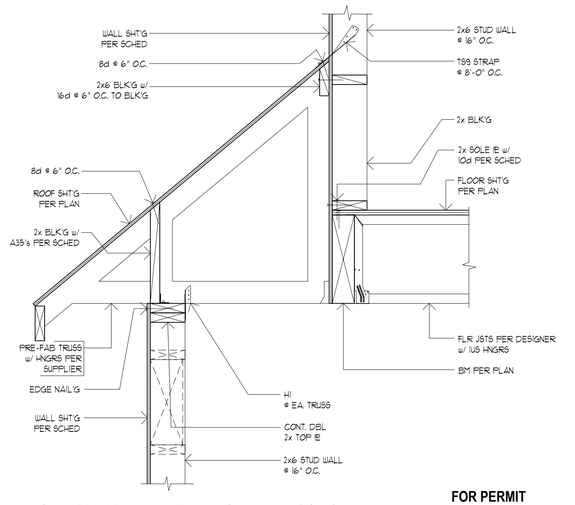

13 SHEARWALL @ BM / JST / TRUSSES

SCALE: 1"=1'-0"

FOR PERMIT 09/28/2018

REGISTERED PROFESSIONAL ENGINEER
51319PE
OREGON
JAN. 12, 1995
DAVID J. HORN
Expires: 6-30-19

HCE
Horn Consulting Engineers LLC
9320 SW Barbur Blvd. Ste 335 Portland, OR 97219
Phone: 503.892.5782 Email: dave@hornce.com

DISCLAIMER: THE SIGNATURE AND STAMP FOR THESE STRUCTURAL DRAWINGS ARE VALID ONLY WHEN ACCOMPANIED BY A DEVELOPMENT AND SITE SPECIFIC SET OF STRUCTURAL CALCULATIONS PREPARED BY HORN CONSULTING ENGINEERS LLC AND SEALED WITH A WET STAMP AND SIGNATURE BY THE ENGINEER WHOSE STAMP APPEARS ON THIS SHEET. CONSTRUCTION SHALL BE PERFORMED ONLY WITH A DRAWING SET APPROVED BY THE LOCAL JURISDICTION.

PARCEL 3
1791 BLANKENSHIP RD
WEST LINN, OR 97068

DETAILS

REVISIONS:	
DATE:	9.27.18
SCALE:	1" = 1'-0"
DRAWN:	LY
JOB NO:	1A-18-03

S3.1

ORIGINAL SHEET SIZE: 22x34

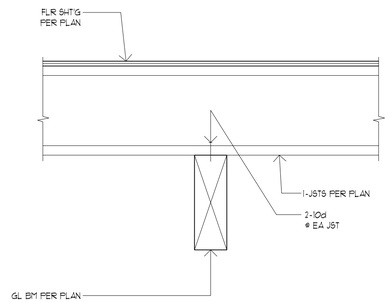

1 TYP. FLOOR TO BM

SCALE: 1"=1'-0"

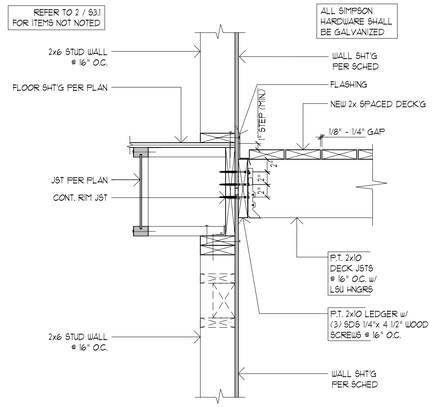

2 DECK LEDGER @ WALL

SCALE: 1"=1'-0"

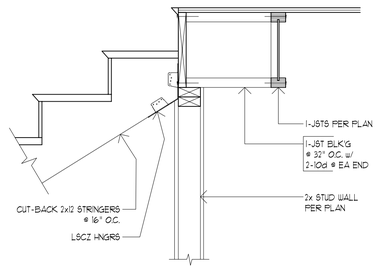

3 STAIR STRINGER / BM

SCALE: 1"=1'-0"

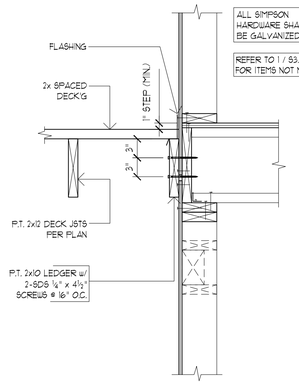

4 DECK LEDGER @ WALL

SCALE: 1"=1'-0"

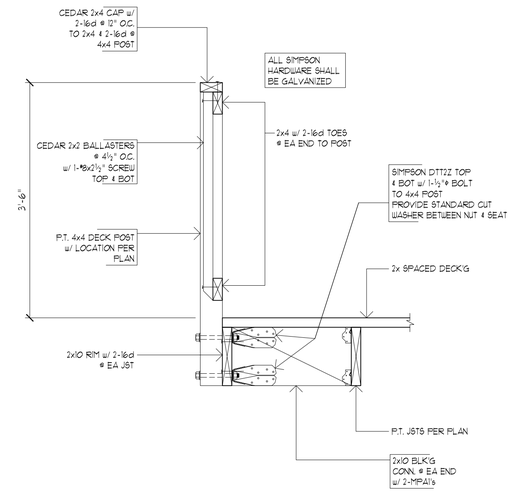

5 DECK POST @ JSTS / DECK'G

SCALE: 1"=1'-0"

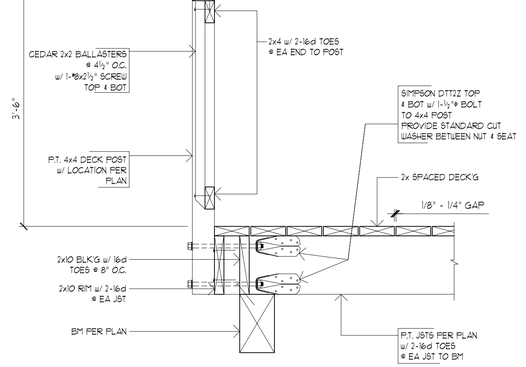

6 DECK POST @ JSTS / DECK'G

SCALE: 1"=1'-0"

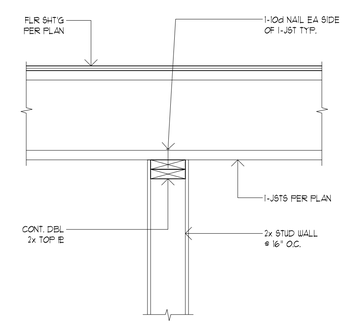

7 TYP. FLOOR TO BRG WALL CONN.

SCALE: 1"=1'-0"

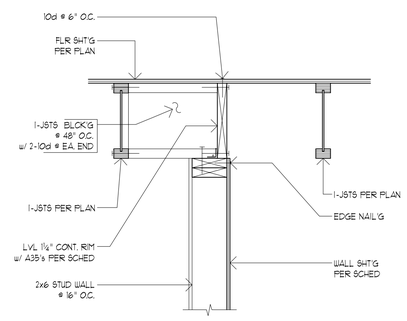

8 TYP. FLOOR TO BRG WALL CONN.

SCALE: 1"=1'-0"

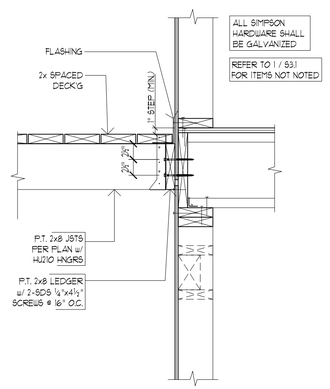

9 DECK LEDGER @ WALL

SCALE: 1"=1'-0"

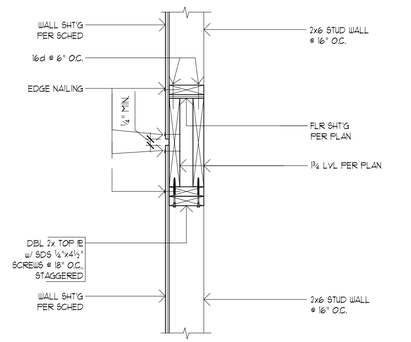

10 STUD WALLS @ STAIR OPENING

SCALE: 1"=1'-0"

FOR PERMIT 09/28/2018

REGISTERED PROFESSIONAL ENGINEER
51319PE
OREGON
JAN. 12, 1999
DAVID J. HORN
Expires: 6-30-19

HCE
Horn Consulting Engineers, LLC
9320 SW Barbur Blvd, Ste 125 Portland, OR 97219
Phone: 503.892.5782 Email: dave@hornce.com

DISCLAIMER: THE SIGNATURE AND STAMP FOR THESE STRUCTURAL DRAWINGS ARE VALID ONLY WHEN ACCOMPANIED BY A DEVELOPMENT AND SITE SPECIFIC SET OF STRUCTURAL CALCULATIONS PREPARED BY HORN CONSULTING ENGINEERS LLC AND SEALED WITH A WET STAMP AND SIGNATURE BY THE ENGINEER WHOSE STAMP APPEARS ON THIS SHEET. CONSTRUCTION SHALL BE PERFORMED ONLY WITH A DRAWING SET APPROVED BY THE LOCAL JURISDICTION.

PARCEL 3
1791 BLANKENSHIP RD
WEST LINN, OR 97068

DETAILS

REVISIONS:

DATE:	9.27.18
SCALE:	1" = 1'-0"
DRAWN:	LY
JOB NO:	1A-18-03

S3.2

ORIGINAL SHEET SIZE: 22x34

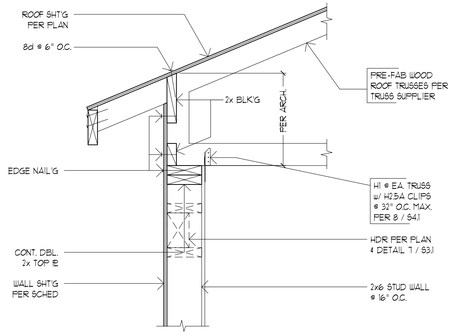

1 PERP. TRUSSES / EXT. WALL

SCALE: 1"=1'-0"

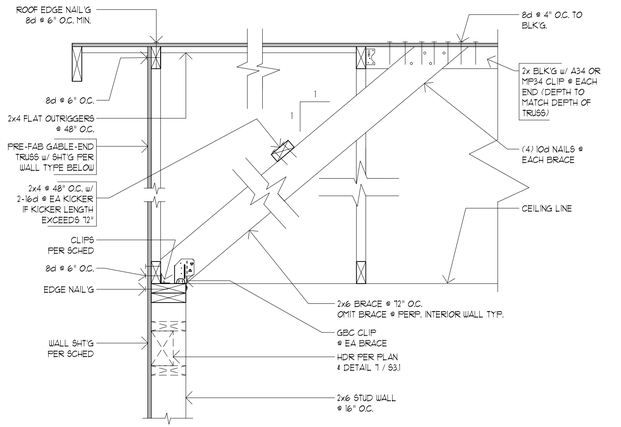

2 PARALLEL TRUSSES TO WALL

SCALE: 1"=1'-0"

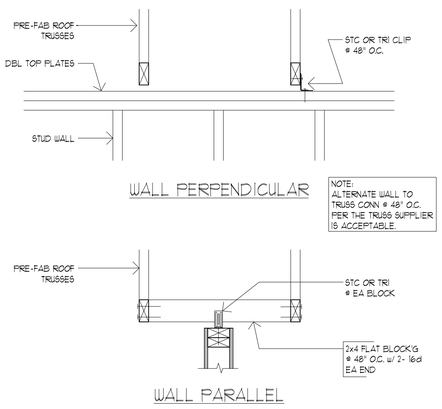

3 TYP. NON-STRUCT. STUD WALL ROOF TRUSS CONN.

SCALE: 1"=1'-0"

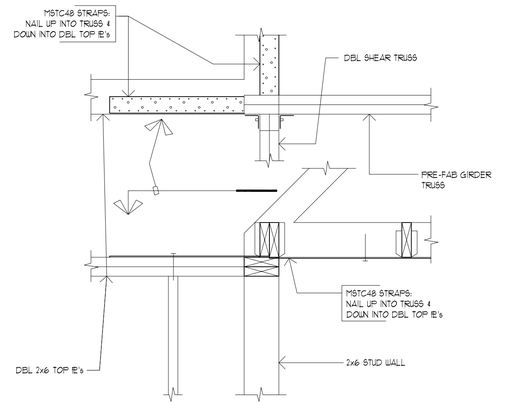

4 GIRDER @ WALL CORNER / SHEAR TRUSS DRAG STRUT CONN.

SCALE: 1"=1'-0"

5 TRUSS PERP W/ VAULT

SCALE: 1"=1'-0"

6 GIRDER @ WALL CORNER / SHEAR TRUSS DRAG STRUT CONN.

SCALE: 1"=1'-0"

7 TRUSS @ BEAM

SCALE: 1"=1'-0"

8 TRUSS TO STUD WALL CONNECTION

SCALE: 1"=1'-0"

FOR PERMIT 09/28/2018

REGISTERED PROFESSIONAL ENGINEER
51319PE
OREGON
JAN. 12, 1995
DAVID J. HORN
Expires: 6-30-19

HCE
Horn Consulting Engineers, LLC
9320 SW Barbur Blvd. Ste 235 Portland, OR 97219
Phone: 503.892.5782 Email: dave@hornce.com

DISCLAIMER: THE SIGNATURE AND STAMP FOR THESE STRUCTURAL DRAWINGS ARE VALID ONLY WHEN ACCOMPANIED BY A DEVELOPMENT AND SITE SPECIFIC SET OF STRUCTURAL CALCULATIONS PREPARED BY HORN CONSULTING ENGINEERS LLC AND SEALED WITH A WET STAMP AND SIGNATURE BY THE ENGINEER WHOSE STAMP APPEARS ON THIS SHEET. CONSTRUCTION SHALL BE PERFORMED ONLY WITH A DRAWING SET APPROVED BY THE LOCAL JURISDICTION.

PARCEL 3
1791 BLANKENSHIP RD
WEST LINN, OR 97068

DETAILS

REVISIONS:	
DATE:	9.27.18
SCALE:	1" = 1'-0"
DRAWN:	LY
JOB NO:	1A-18-03

S4.1

ORIGINAL SHEET SIZE: 22x34

PD-2 PUBLIC COMMENT

Date: April 16, 2019

From: Jack Wilberscheid
Adjacent Property Owner on 2180 and 2182 13th Street
PO Box 1524
Hood River, OR 97031
Mobile Phone: 541-386-9463
Email: jak@gorge.net

Delivered in Person at 1:30 PM April 16, 2019
To: Darrell Wyss, Associate Planner
City Hall
22500 Salamo RD
West Linn, OR 97608
Tel: 503-742-6064

Regarding: 1791 Blankenship Rd. 3 Lot Minor Partition
File No. MIP-18-06/DR-18-06

Dear Mr. Wyss:

Below is my written testimony submitted for your consideration as well as for the Director of City Planning's consideration regarding the 1791 Blankenship Road proposal to subdivide one lot into 3 lots:

1. Why change the orientation of the building lots? It seems to me that the existing lot could be subdivided with two homes facing along Blankenship Road. The street front line along Blankenship Road would be maintained and fits the natural contours for drainage, landscaping, and overall neighborhood appeal. Has this option been considered and reviewed? As well as, normal set back requirements would work.
2. I am opposed to granting side yard variances. There is no reason to allow a 7.5 foot side yard requirement to be changed to 6 foot, 6 foot, and 7 foot as well as a 12 foot set back changed to a 7 foot set back requirement. It appears that the developer is trying to squeeze one more lot on a site where the extra lot does not add to the feel of the community and crowds the neighboring properties.
3. The height of the home on Parcel 3 may block the local TV reception.
4. Parking on 13th Street is limited to the East side and is steep near this lot and has a 20 foot ban on parking near the intersection. Additional homes would impact the existing neighbors who use 13th Street for parking for their immediate vehicles and occasionally their visitors. Parents waiting to pick up children off of school buses would not have a good view of their children getting off the bus. Also, Century Link has internet hubs on 13th Street for the adjoining businesses. They often have two vans parked on the street for long periods of time to upgrade and maintain their systems.

5. The drainage calculations for the site were based on roof top area only. I could not determine if all the roof top drains were piped to the garden basins out front. If so, I am concerned that occasionally the pipe would plug and could overflow into my yard. In addition, cleaning the gutters would be a problem due to limited access. If is not piped to a catch basin; then, all the run off will end up in my backyard as it already accumulates there from 1791 Blankenship.
6. Cross section views do not adequately show the elevation difference between Parcel 3 and the backyard of 2180 and 2182 13th Street. I have estimated my backyard elevation is at 171 and the building proposed for Parcel 3 roofline is at elevation 208. This would be a 37 foot side yard wall elevation difference with only a 7 foot set back. This would impact the aesthetics of the existing backyard and not provide a natural roof elevation transition.
7. The existing development plan does not provide adequate parking as previously stated. The neighborhood currently uses 13th Street for parking and adding 3 new homes would add congestion to parking on the street. This will impact mail delivery and trash pick-up as well.
8. If the developer wants to subdivide the property, I suggest that he go with two houses to replace the existing house and provide parking for each bedroom.
9. There is no point in extending the sidewalk on the west side of 13th. There is already a nice side walk on the east side of 13th. Use that area to add parking for a third car for each unit.
10. There is one place where they state that development will be staged and another where it will not be staged. What is their commitment?
11. The soil on the existing property is hauled in un-engineered gravel. It is porous. Water that falls on the site infiltrates quickly and then hits the clay layer underneath. This causes water and ponding in the backyard of 2180 13th Street. The added development will no doubt make this worse. A solution would be an interceptor ground wall with a drain that would allow the water to flow into the storm sewer. This would remediate the site for the existing water drainage problem. However, this drain would need to go where Parcel 3 is located.
12. I would like to see the south bank terraced and landscaped even if there are only two parcels.
13. The architecture does not match the existing buildings. The eave height of the existing building adjacent to Parcel 3 is 9 feet and the peak ridge height is 14'-6". This combined with naturally elevated land amplifies the elevation difference between the new house and existing. I suggest maintaining a 20 foot set back from the south side yard of Parcel 3. This would allow proper drainage, minimize the "canyon effect" to the existing backyard, and provide greater privacy for the four existing bedrooms and two bathrooms facing Parcel 3.
14. On the Class 1 Variance Section 75-1c, the I take exception to the privacy, light, TV reception, noise, and about providing a smooth transition to existing roof lines.
15. The existing plans have labeled the cross sections view incorrectly for Parcel 3 making it difficult to review plans.
    a. South = East

b. West = South
c. East = North
d. North = West

16. The floor elevations on Parcel 3 are different on the cross section and on the site layout plan. The new grading contours are not shown on Parcel 3.
17. The cross sections do not show the elevations of the surrounding properties and streets and make it difficult to make an informed decision of the impacts of this subdivision.
18. The Survey states that the survey will not be recorded. Why? Should not a subdivided lot be required to have a recorded survey?

In summary, I do not think the existing site is suitable for three lots, 9 bedrooms, and only 3 parking spaces. The existing site could be suitable for two individual homes provided they add additional parking for each bedroom. I also do not support variations to the current minimum set back restrictions. I would like to see the character of this neighborhood enhanced and feel that two new houses would do that, but not three. I recommend that you ask for a new layout showing only two houses and that they face Blankenship Road with access allowed on 13th Street similar to what we currently have.

Thank you for taking my call and providing time for our meeting today and allowing me the opportunity for input into this planning phase.

Respecfully,

Jack Wilberscheid
Adjacent Property Owner 30 Years

PD-3 AFFADAVIT AND NOTICE PACKET

AFFIDAVIT OF NOTICE

We, the undersigned do hereby certify that, in the interest of the party (parties) initiating a proposed land use, the following took place on the dates indicated below:

GENERAL
File No. MIP-18-06 Applicant's Name Jeremy Barnett
Development Name _____
Scheduled ~~Meeting~~/Decision Date 4-16-19

NOTICE: Notices were sent at least 20 days prior to the scheduled hearing, meeting, or decision date per Section 99.080 of the Community Development Code. **(check below)**

TYPE A ✓

A.	The applicant (date) 3-27-19	(signed)	S. Shroyer
B.	Affected property owners (date) 3-27-19	(signed)	S. Shroyer
C.	School District/Board (date) _____	(signed)	_____
D.	Other affected gov't. agencies (date) 3-27-19	(signed)	S. Shroyer
E.	Affected neighborhood assns. (date) 3-27-19 (ALL)	(signed)	S. Shroyer
F.	All parties to an appeal or review (date) _____	(signed)	_____

At least 10 days prior to the scheduled hearing or meeting, notice was published/posted:

Tidings (published date) N/A (signed) S. Shroyer
City's website (posted date) 3-27-19 (signed) S. Shroyer

SIGN

At least 10 days prior to the scheduled hearing, meeting or decision date, a sign was posted on the property per Section 99.080 of the Community Development Code.
(date) 4-4-2019 (signed) Dan Schlye

NOTICE: Notices were sent at least 14 days prior to the scheduled hearing, meeting, or decision date per Section 99.080 of the Community Development Code. **(check below)**

TYPE B _____

A.	The applicant (date) _____	(signed)	_____
B.	Affected property owners (date) _____	(signed)	_____
C.	School District/Board (date) _____	(signed)	_____
D.	Other affected gov't. agencies (date) _____	(signed)	_____
E.	Affected neighborhood assns. (date) _____	(signed)	_____

Notice was posted on the City's website at least 10 days prior to the scheduled hearing or meeting.
Date: _____ (signed) _____

STAFF REPORT mailed to applicant, City Council/Planning Commission and any other applicable parties 10 days prior to the scheduled hearing.
(date) _____ (signed) _____

FINAL DECISION notice mailed to applicant, all other parties with standing, and, if zone change, the County surveyor's office.
(date) 6/18/2019 (signed) Dan Schlye

p:\devrvw\forms\affidvt of notice-land use (9/09)

CITY OF WEST LINN
NOTICE OF UPCOMING
PLANNING MANAGER DECISION
FILE NO. MIP-18-06/DR-18-06

The West Linn Planning Manager is considering a request for a 3-Lot Minor Partition and Class I Design Review at 1791 Blankenship Rd.

The decision will be based on the approval criteria in Chapters 38, 43, 48, 55, 59, 85, 92, and 99 of the Community Development Code (CDC). The approval criteria from the CDC are available for review at City Hall, at the City Library, and at http://www.westlinnoregon.gov/cdc.

You have received this notice because County records indicate that you own property within 500 feet of this property (Tax Lot 2600 of Clackamas County Assessor's Map 21E 35CB) or as otherwise required by Chapter 99 of the CDC.

All relevant materials in the above noted file are available for inspection at no cost at City Hall, and on the city web site https://westlinnoregon.gov/planning/1791-blankenship-road-3-lot-minor-partition or copies may be obtained for a minimal charge per page. A public hearing will not be held on this decision. **Anyone wishing to present written testimony for consideration on this matter shall submit all material before 4:00 p.m. on April 16, 2019. Persons interested in party status should submit their letter along with any concerns related to the proposal by the comment deadline.** For further information, please contact Darren Wyss, Associate Planner, City Hall, 22500 Salamo Rd., West Linn, OR 97068, (503)742-6064, dwyss@westlinnoregon.gov.

Any appeals to this decision must be filed within 14 days of the final decision date with the Planning Department. **It is important to submit all testimony in response to this notice.** Failure to raise an issue in person or by letter, or failure to provide sufficient specificity to afford the decision-maker an opportunity to respond to the issue, precludes the raising of the issue at a subsequent time on appeal or before the Land Use Board of Appeals.

1791 Blankenship Road Notification Map

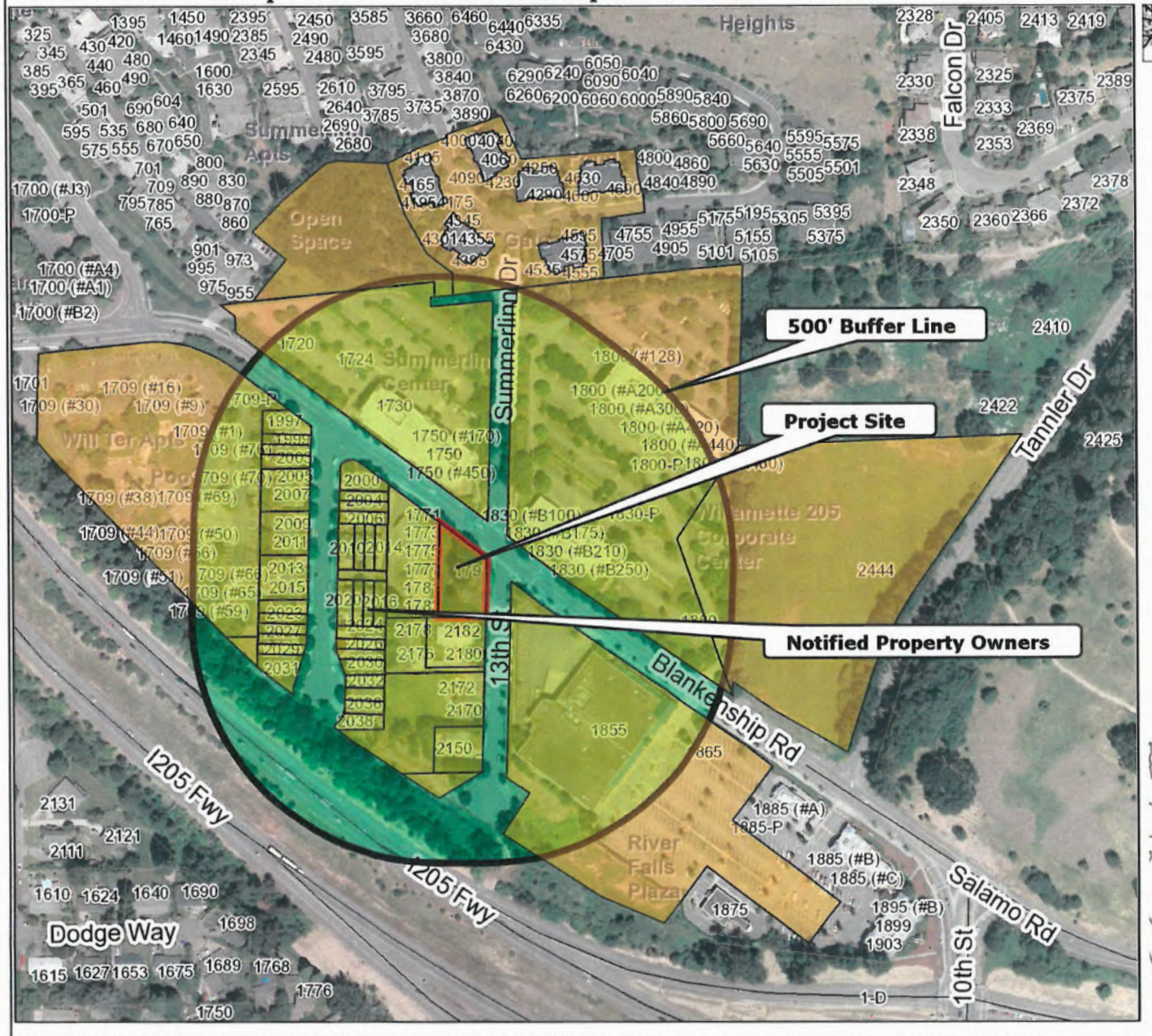

CITY OF West Linn

N
W E
S

Feet
0 150

Scale 1:3,600 - 1 in = 300 ft
Scale is based on 8-1/2 x 11 paper size

Map created by: SSHROYER
Date Created: 26-Mar-19 10:07 AM

WEST LINN GIS

DISCLAIMER: This product is for informational purposes and may not have been prepared for, or be suitable for legal, engineering, or surveying purposes. Users of this information should review or consult the primary data and information sources to ascertain the usability of the information. Map scale is approximate. Source: West Linn GIS (Geographic Information System) MapOptix.

CITY OF West Linn

CITY OF WEST LINN
NOTICE OF UPCOMING
PLANNING MANAGER DECISION

PROJECT # MIP-18-06/DR-18-06
MAIL: 3/27/19 TIDINGS: N/A

CITIZEN CONTACT INFORMATION

To lessen the bulk of agenda packets, land use application notice, and to address the worries of some City residents about testimony contact information and online application packets containing their names and addresses as a reflection of the mailing notice area, this sheet substitutes for the photocopy of the testimony forms and/or mailing labels. A copy is available upon request.

PD-4 COMPLETENESS LETTER

March 22, 2019

Jeremy Barnett
10220 SW View Terrace
Tigard, OR 97224

SUBJECT: MIP-18-06/DR-18-06 application for 3-Lot Minor Partition and Class I Design Review for partition and construction of 3-new single-family homes at 1791 Blankenship Road

Jeremy:

You submitted this application on October 18, 2018. The Planning and Engineering Departments found that this application was incomplete on November 16, 2018. All required information was subsequently provided on March 13, 2019 and the application has now been deemed **complete.** The city has 120 days to exhaust all local review; that period ends July 11, 2019.

Please be aware that determination of a complete application does not guarantee a recommendation of approval from staff for your proposal as submitted – it signals that staff believes you have provided the necessary information for the Planning Director to render a decision on your proposal.

A 20-day public notice will be prepared and mailed. This notice will identify the earliest potential decision date by the Planning Director.

Please contact me at 503-742-6064, or by email at dwyss@westlinnoregon.gov if you have any questions or comments.

Sincerely,

Darren Wyss
Associate Planner

PD-5 PROPERTY MAPS

Aerial Photo

CITY OF West Linn

N
W E
S

Feet
0 25

Scale 1:600 - 1 in = 50 ft
Scale is based on 8-1/2 x 11 paper size

Map created by: DWYSS
Date Created: 17-Jun-19 10:03 AM

WEST LINN GIS

DISCLAIMER: This product is for informational purposes and may not have been prepared for, or be suitable for legal, engineering, or surveying purposes. Users of this information should review or consult the primary data and information sources to ascertain the usability of the information. Map scale is approximate. Source: West Linn GIS (Geographic Information System) MapOptix.

Zoning

CITY OF West Linn

N
W E
S

Feet
0 25

Scale 1:600 - 1 in = 50 ft
Scale is based on 8-1/2 x 11 paper size

Map created by: DWYSS
Date Created: 17-Jun-19 10:04 AM

WEST LINN GIS

DISCLAIMER: This product is for informational purposes and may not have been prepared for, or be suitable for legal, engineering, or surveying purposes. Users of this information should review or consult the primary data and information sources to ascertain the usability of the information. Map scale is approximate. Source: West Linn GIS (Geographic Information System) MapOptix.

PD-2 COMPLETENESS LETTER

September 9, 2021

Jeremy Barnett
19363 Willamette Dr, MBN 111
West Linn, OR 97068

SUBJECT: MISC-21-10 Application requesting a two year time extension for the previous approval of a 3-lot partition: MIP-18-06/DR-18-06

Dear Mr. Barnett:

You submitted this application on August 10, 2021. The Planning Department has reviewed the submitted materials and has deemed the application is **complete.** The city has 120 days to exhaust all local review; that period ends January 7, 2022.

Please be aware that determination of a complete application does not guarantee a recommendation of approval from staff for your proposal as submitted – it signals that staff believes you have provided the necessary information for the Planning Department to render a decision on your proposal.

Please contact me at 503-742-6058, or by email at jfloyd@westlinnoregon.gov if you have any questions or comments.

Sincerely,

John M Floyd

John Floyd

Associate Planner

PD-3 AFFADAVIT AND NOTICE PACKET

CITY OF West Linn

AFFIDAVIT OF NOTICE
Type A

We, the undersigned do hereby certify that, in the interest of the party (parties) initiating a proposed land use, the following took place on the dates indicated below:

PROJECT
File No.: MIS-21-10 Applicant's Name: Jeremy Barnett
Development Name: 1791 Blankenship Road.
Scheduled Decision Date: Planning Manager no earlier than 10/13/21

APPLICATION
The application, all documents or evidence relied upon by the applicant, and applicable criteria were posted on the website at least 20 days prior to the hearing or decision date per Section 99.040 of the Community Development Code.

9/22/21	*Lynn Schroder*

MAILED NOTICE
Notices were mailed at least 20 days prior to the scheduled hearing date per Section 99.080 of the Community Development Code to:

1	**Jeremey Barnett, applicant**	**9/22/21**	*Lynn Schroder*
2	**WLWVSD**	**9/22/21**	*Lynn Schroder*
3	**Property owners of record within 500 feet**	**9/22/21**	*Lynn Schroder*
4	**Willamette Neighborhood Associations**	**9/22/21**	*Lynn Schroder*
5	**TriMet**	**9/22/21**	*Lynn Schroder*
6	**Clackamas County**	**9/22/21**	*Lynn Schroder*
7	**ODOT**	**9/22/21**	*Lynn Schroder*

WEBSITE
Notice was posted on the City's website at least 20 days prior to the scheduled hearing date.

9/22/21	*Lynn Schroder*

SIGN
At least 10 days prior to the schedule hearing, a sign was posted on the property per Section 99.080 of the Community Development Code.

9/23/21	*John Floyd*

FINAL DECISION notice mailed to applicant, parties with standing, and, if zone change, the County surveyor's office per Section 99.040 of the Community Development Code.

10/19/21	*John Floyd*

CITY OF WEST LINN
NOTICE OF UPCOMING PLANNING MANAGER DECISION
FILE NO. MIS-21-10

The West Linn Planning Manager is considering a request for a two-year extension for MIP-18-06/DR-18-06 which approved a 3-Lot Minor Partition and Class I Design Review at 1791 Blankenship Road. If granted, the extension would extend the validity period from July 2, 2022 to June 18, 2024.

The decision will be based on the approval criteria in Chapter 99 of the Community Development Code (CDC). The applicable approval criteria are available for review on the City's website http://www.westlinnoregon.gov/cdc or at City Hall and the City Library.

The application is posted on the City's website, https://westlinnoregon.gov/planning/extension-approval-3-parcel-partition-1791-blankenship-road. Alternatively, the application, all documents or evidence relied upon by the applicant and applicable criteria are available for inspection at City Hall at no cost. Copies may be obtained at reasonable cost.

A public hearing will not be held for this decision. **Anyone wishing to present written testimony for consideration shall submit all material before 4:00 p.m. on October 13, 2021.** Persons interested in party status should submit a letter outlining any concerns about the proposal by the comment deadline to Associate Planner John Floyd at JFloyd@westlinnoregon.gov or 22500 Salamo Rd., West Linn, OR 97068.

It is important to submit all testimony in response to this notice. All comments submitted for consideration of this application should relate specifically to the applicable criteria. Failure to raise an issue in person or by letter, or failure to provide sufficient specificity to afford the decision-maker an opportunity to respond to the issue, precludes the raising of the issue at a subsequent time on appeal or before the Land Use Board of Appeals.

The final decision will be posted on the website and available at City Hall. Persons with party status may appeal the decision by submitting an appeal application to the Planning Department within 14 days of the final decision pursuant to CDC 99.240.

Contact John Floyd, Associate Planner, City Hall, 22500 Salamo Rd., West Linn, OR 97068, (503) 742-6058 for additional information.

MISC-21-10 Properties with 500 feet of 1791 Blankenship

CITY OF West Linn

COMMUNITY DEVELOPMENT

NOTICE OF UPCOMING
PLANNING MANAGER DECISION

PROJECT # MISC-21-10
MAIL: 9/22/21 TIDINGS: N/A

CITIZEN CONTACT INFORMATION

To lessen the bulk of agenda packets and land use application notice, and to address the concerns of some City residents about testimony contact information and online application packets containing their names and addresses as a reflection of the mailing notice area, this sheet substitutes for the photocopy of the testimony forms and/or mailing labels. A copy is available upon request.

EXHIBIT PD-4: AFFIDAVIT AND NOTICE PACKET

CITY OF West Linn

AFFIDAVIT OF NOTICE
TYPE A
PLANNING MANAGER DECISION

We, the undersigned, certify that, in the interest of the party initiating a proposed land use, the following took place on the dates indicated below:

PROJECT
File No.: **EXT-23-02** Address: **1791 Blankenship Rd**
Applicant's Name: **Jeremy Barnett**
Scheduled Decision Date: **Planning Manager Decision no earlier than 10/9/23**

MAILED NOTICE
Notice of Upcoming Planning Manager Decision was mailed at least 14 days before the decision date, per Section 99.080 of the Community Development Code to:

Jeremy Barnett, applicant / owner	**09/19/23**	*Lynn Schroder*
Property owners within 500ft of the site perimeter	**09/19/23**	*Lynn Schroder*
Willamette Neighborhood Association	**09/19/23**	*Lynn Schroder*
WL/WV School District	**09/19/23**	*Lynn Schroder*
TriMet	**09/19/23**	*Lynn Schroder*
Clackamas County	**09/19/23**	*Lynn Schroder*
ODOT	**09/19/23**	*Lynn Schroder*

EMAILED
Notice was emailed.

Jeremy Barnett, applicant / owner	**09/19/23**	*Lynn Schroder*
Willamette Neighborhood Association	**09/19/23**	*Lynn Schroder*

WEBSITE
Notice was posted on the City's website 20 days before the decision date.

09/19/23	*Lynn Schroder*

SIGN
A sign was posted on the property at least 10 days before the decision, per Section 99.080 of the CDC.

9/20/23	*Ben Gardner*

FINAL DECISION
Notice of Final Decision was mailed to the applicant, all parties with standing, and posted on the City's website, per Section 99.040 of the Community Development Code.

10/13/23	*Lynn Schroder*

CITY OF WEST LINN
NOTICE OF UPCOMING PLANNING MANAGER DECISION
FILE NO. EXT-23-02

The West Linn Planning Manager is considering a second, 2-year extension of a minor partition at 1791 Blankenship Road (MIP-18-06). The first extension extended the approval date from July 2, 2022 to July 2, 2024 (MISC-21-10). The proposed extension would extend the validity date from July 2, 2024 to July 2, 2026.

The Planning Manager will decide the application based on criteria in Chapter 99 of the Community Development Code (CDC). The CDC approval criteria are available for review on the City website http://www.westlinnoregon.gov/cdc or at City Hall and the City Library.

The application is posted on the City's website:

https://westlinnoregon.gov/planning/extension-approval-3-parcel-partition-1791-blankenship-road-0

The application, all documents or evidence relied upon by the applicant and applicable criteria are available for inspection at City Hall at no cost. Copies may be obtained at reasonable cost.

A public hearing will not be held for this decision. **Anyone wishing to submit comments for consideration must submit all material before 4:00 p.m. on Monday, October 9th to bgardner@westlinnoregon.gov or mail them to City Hall. All comments must be received by the deadline.**

It is important to submit all testimony in response to this notice. All comments submitted for consideration of this application should relate specifically to the applicable criteria. Failure to raise an issue in a hearing, in person, or by letter, or failure to provide sufficient specificity to afford the decision-maker an opportunity to respond to the issue, precludes appeal to the Oregon Land Use Board of Appeals based on that issue (CDC Section 99.090).

The final decision will be posted on the website and available at City Hall. Persons with party status may appeal the decision by submitting an appeal application to the Planning Department within 14 days of mailing the notice of the final decision pursuant to CDC 99.240.

For additional information, please contact Ben Gardner, Assistant Planner, City Hall, 22500 Salamo Rd., West Linn, OR 97068, 503-742-6057

Scan this QR Code to go to Project Web Page:

EXT-23-02 – Notified Properties within 500 feet of 1791 Blankenship

CITY OF West Linn

COMMUNITY DEVELOPMENT

NOTICE OF UPCOMING
PLANNING MANAGER DECISION

PROJECT # EXT-23-02
MAIL: 9/19/23 TIDINGS: N/A

CITIZEN CONTACT INFORMATION

To lessen the bulk of agenda packets and land use application notice, and to address the concerns of some City residents about testimony contact information and online application packets containing their names and addresses as a reflection of the mailing notice area, this sheet substitutes for the photocopy of the testimony forms and/or mailing labels. A copy is available upon request.