City of West Linn

Memorandum

Date: August 26, 2015

To: Planning Commission

From: John Boyd AICP, Planning Manager

Subject: ConAm LLC DR 15-11/LLA 15-01 Additional Information

Attached to this memorandum is additional evidence or testimony provided for the ConAm LLC applications received between 5:00 pm on 8/21/15 and 2:00 pm on 8/26/15

Shroyer, Shauna

From: Kerr, Chris
Sent: Wednesday, August 26, 2015 11:35 AM
To: Shroyer, Shauna
Subject: FW: ConAm Project
Attachments: ConAm project.pdf

Chris Kerr
Community Development Director
Email: ckerr@westlinnoregon.gov, #1538
http://westlinnoregon.gov

-----Original Message-----
From: USC Alumni PDX [mailto:pdx_trojans@yahoo.com]
Sent: Wednesday, August 26, 2015 11:33 AM
To: CWL Planning Commission
Subject: ConAm Project

Please see the attached letter in regards to this project.

Dear Planning Commission,

We are writing as a concerned group of neighbors in the Willamette district, the district that will be severely affected by this ConAm project. After attending our neighborhood meeting where this project was presented to us, we felt that ConAm was trying to pull the wool over our eyes by convincing us this was a mixed use project and appropriate for the zone. While we have no problem with a property owner being able to develop his/her property, it must follow the code and should be done in a way that best fits the City of West Linn's community goals.

This is a long letter so we'll give you some brief highlights. Full details are also included.

- This is OBC (Office Business Zone). This application does not meet the criteria for this zone.
    - **PURPOSE** of zone, as stated in the code, is to "provide for groups of businesses and offices in centers". With one office space PER building and an estimated 5% of a 7 acre parcel dedicated to "business use", this does not meet the "group" or "center" purpose of the zone.
    - The state defines "mixed use" as a combination of residential and commercial use "well integrated". This application does not fit this definition.
    - While Multi-Family is an "option", residential use can only occupy the space above the first floor. The garages are for "residential" use, thus this project does not meet the "above the first floor criteria. Garages will not be rented for commercial purposes, only to residents and thus are a "residential" usage. State handbook states no more than 50% of the bottom floor should be for "residential use" or that "Residential uses are permitted on upper stories and on ground floors when they **do not use storefront space**." The intention of the "above the first floor" is for commercial use on the entire first floor.
- ORS197.307(4) should not be applied because this is a commercial zone property
    - Has ConAm stated what units will be rented at price wise to meet "low income" portion of this statute?
    - The Secretary of State defines "buildable land" as "residentially designated land" (on same page where ORS197.307 is described). This is OBC commercially designated land. This parcel is **not on** the "residential buildable land" inventory sheet per the City of West Linn. Thus, ORS197.307(4) should be applied to this project.
    - The new EOA states we have a "deficit of 16.2 acres of to meet the expected level of commercial job growth for West Linn". Since this application is almost entirely for residential use, and only an estimated 5% is being used for commercial purposes, West Linn will be at an even larger deficit of needed commercial land.
    - Statewide goals for Economic Development (Goal 9) should be applied to a commercially zoned parcel, not the Statewide Goals for Housing. Economic Development applies to commercially zoned lands, so this should take priority over Housing which is an incidental use in the zone.
- Project is not compatible with the WNA and the City of West Linn's Comprehensive Plan
    - Since this is zoned commercial, the commercial sections of the Comp plan should be used, not the residential parts of the Comp Plan that ConAm refers to in their application.
    - WL Comp plan describes Commercial areas and uses Metro's definition of "mixed use". This project fits neither definition.
    - LUBA ruled a city can deny an application based on inappropriate uses for the zone
- Alternative options for this plan that would fit the code are offered including reworking this current project to include commercial space on the ENTIRE first floor or a retirement village.

Let's get started. First, this is OBC zoned. While I understand that residential is allowed above the first floor in this zone, we'd like to point out several things.

Per the CDC, this is the "purpose" of the OBC Zone:

> "The purpose of this zone is to provide for groups of business and offices in centers, to accommodate the location of intermediate uses between residential districts and areas of more intense development, to provide opportunities for employment and for business and professional services in close proximity to residential neighborhoods and major transportation facilities, to expand the City's economic potential, to provide a range of compatible and supportive uses, and to locate office employment where it can support other commercial uses. The trade area will vary and may extend outside the community. This zone is intended to implement the policies and criteria set forth in the Comprehensive Plan."

This project does not meet the "purpose" of the zone. While ConAm will try to convince us that it does because there is 300 square feet of office space, there is only one unit per BUILDING. This does not meet the "groups" or "center" purpose of the zone.

This project also does not give "opportunities for employment". To give you some perspective, an average hotel room is 325 square feet. So these "offices" will be smaller than an average hotel room. An average restaurant requires at least 4,000 square feet. Thus, the total square footage in the entire 7 acre project is half the size of a typical restaurant. Common sense tells us an "office" the size of a hotel room is not going really provide much opportunity for employment. If occupied, it may be a CPA or real estate office with one or two desks maximum. These spaces should be thought of as "kiosks" because of their size.

ConAm tries to trick the public in their application by stating "A total of 180 multi-family residential units .... and approximately 2,000 total square feet of commercial space are proposed." Why state 180 units but then state the commercial parts as square footage? To make it seem like there is all this commercial space. They know it is a residential project they are trying to make the argument fits this zone. Let's say the average unit is about 750 square feet. This equates to about 135,000 square feet. So if ConAm was not trying to "trick" us, they would have more accurately stated in their application that the project is 135,000 square feet of residential space and 2000 square feet of commercial space. When you see it presented this way, you see the sheer discrepancy between office/commercial space for a parcel that is zoned OBC (Office Business Commercial). This equates to about 5% of commercial space in the whole project. These are conservative numbers and do not take in to account the garages which we will get into later.

So how does this project fit the PURPOSE of the OBC Zone?

- The CDC does go on to describe "permitted uses"

> "The following uses are permitted outright in this zone:
> 1. Business equipment sales and services.
> 2. Business support services.
> 3. Communications services.
> 4. Cultural exhibits and library services.
> 5. Family day care.
> 6. Financial, insurance and real estate services.
> 7. Hotel/motel, including those operating as extended hour businesses.
> 8. Medical and dental services.
> 9. Parking facilities.
> 10. Participant sports and recreation, indoor.

11. Personal services and facilities.
12. Professional and administrative services.
13. Utilities, minor.
14. Transportation facilities (Type I). (Ord. 1226, 1988; Ord. 1401, 1997; Ord. 1590 § 1, 2009; Ord. 1622 § 23, 2014)"

Again, you see that these are all commercial type uses, not residential. The way ConAm gets this application through is the following:

> The following uses are allowed in this zone under **prescribed conditions**:
>
> 2. Multiple-family units, as a **mixed use** in conjunction with commercial development, **only above the first floor of the structure.**

It is not until you get way down into this zoning that you find "prescribed conditions". It is not an outright use for the zone, and essentially ConAm is trying to use a loophole to get this project done.

Let's start with "as a mixed use". The State of Oregon puts out a guide for cities called "Commercial and Mixed-Use Development Code Handbook". http://www.oregon.gov/LCD/docs/publications/commmixedusecode.pdf It gives us the idea of what the State considers "mixed use":

> "mixed-use" means a combination of residential and commercial/industrial/civic uses, arranged vertically (in multiple stories of buildings) or horizontally (adjacent to one another); or B. The proposal is designed in such a way that it is **well integrated** with adjacent land uses. "Integrated" means that uses are within a comfortable walking distance (1/8 mile) and are connected to each other with direct, convenient and attractive sidewalks and/or pathways; (p. 55)

Since ConAm likes dictionary definitions so much in their application, "well" in is defined as: "completely or fully". "Integrated" is defined as "combining or coordinating separate elements so as to provide a harmonious whole". With one office in the corner of each building, (completely separated) does this fit the definition of "well integrated"? An appropriate use of this parcel per the "mixed use" guidelines set by the State of Oregon would be to have a better ratio of office/businesses to housing.

The Handbook then gives this "objective" for mixed use:

> Objective: Develop different types of compatible land uses close together in appropriate locations, to **shorten trips** and **facilitate alternative modes of transportation**, such as walking, bicycling and public transportation.

ConAm claims that the shopping center on Blankenship fits this criteria, but the project does not abut Blankenship so there is no easy exit to the existing shopping areas that people could walk to. They have to go out the exit on Tannler and walk a steep hill to get to the shopping center. The closest cross walk is another half block away. ODOT has already said they will not allow a blinking crosswalk at Tannler and Blankenship, how are pedestrians supposed to get across the street to use the commercial areas? A "kiosk" on each building does nothing to promote "shorter trips" or "facilitate alternative modes of transportation".

When ConAm originally came to the WNA, they told us the commercial units were going to be 500 square feet and there would be 192 residential units. When the fire department did not allow 4 stories on the front two buildings, ConAm had to shrink the project to 180 residential units,

subsequently reducing the square footage of the commercial units to 300 square feet. It is obvious they are trying to maximize residential area, and minimize commercial area. They are not trying to encourage business purposes or make it walkable.

We live in the Willamette area. We know what mixed use looks like. Our strip on Willamette Falls Dr. has businesses on the ground floor (the entire ground floor) and apartments above the shops. This is what any lay person thinks of when they think of mixed use. But with the project they've presented to us, they are trying to deceive us by telling us that it is "mixed use" because they have a 300 square foot corners of commercial space.

The handbook also talks about the planning for a mixed use zone:

> "Compact pedestrian-oriented development requires an approach to site planning and that is different than the approach used to design automobile-dependent communities. For instance, standards that require large setbacks, vast areas of landscaping, and walls between parking lots and streets result in barriers to pedestrians because they typically create unsafe, inconvenient, and unpleasant conditions for walking. Smart development codes orient building entrances to street sidewalks, break up large areas of surface parking with pathways and landscaping, encourage development of parking structures, and provide direct, safe, and comfortable access to buildings for walking and wheelchairs"

We will get into a little bit later, but ConAm and city staff also tries to convince us in this application that this project is not subject to our existing code in commercial areas as the requirements are "subjective". Things like pathways and landscaping can't be enforced in the design criteria. ConAm is purposely trying to design the project around residential codes and not adhere to the things our code requires for mixed use/commercial zone. Is this a residential project or a mixed use project? On the one hand ConAm needs it to be a mixed use project because this is the only way it fits the code. However, they want us to apply only "housing" standards to their application. Again, seems fishy.

Bottom line, in order for this project to meet the "mixed use" criteria, it needs to have a better "mix" of commercial space inside the development and the commercial district outside the area cannot be considered part of the "mix". **If the entire bottom floor of every building in this development was dedicated commercial/office space, we would say the project fits the code** and we would not object to this project going forward even with this many housing units. It is not that we don't want housing. We have a member of this group that owns a business in Willamette. More people means more customers. But as we will discuss later, our city has only limited commercial developable land and we must develop this land smartly.

Now let's take on the "only above the first floor of the structure" clause. We think this means again, that commercial space needs to occupy the entire first floor with residential use above. While the ConAm people may interpret it differently, who are those garages serving? Are the garages that occupy the rest of the first floor not intended for the residents' use? It is in their application that the "commercial" tenants are in the "designated visitor parking spaces on the site". The garages are not for commercial use. Thus, the garages are part of the "multi-family units" and thus does not meet the criteria of the code. The code is clear "MULTIPLE FAMILY UNITS…ONLY ABOVE THE FIRST FLOOR OF THE STRUCTURE". Only means ONLY. Garages which belong to the residential part of the structure are not "above the first floor". If the garages were being used for some light industrial use (i.e. warehouses) we may be convinced that this meets the code. But as long as those garages are being rented to the residents of the multi-family units above, this is not and should not be considered fitting the criteria of the code.

On page 48 of this State Mixed Use Planning Handbook, there is a table of "permitted land uses". If we look at "mixed use", and we would classify this area as a "commercial corridor" area due to its proximity to I-205. For "commercial corridors" it says mixed use is a "special condition S2" where "**Residential uses** shall not exceed 50 percent of the ground floor building space **per lot or parcel**" So again, if we consider that the garages are for the "residential use" and garages take up about 90% of the ground floor for the lot, this development does not meet the State of Oregon's definition of Mixed Use.

Even if you don't call this a corridor, the State handbook says this for all other mixed use areas: "Residential uses are permitted on upper stories and on ground floors when they do not use storefront space." The garages in this plan are definitely taking up storefront space. The bottom line is that this project needs significantly more commercial space to properly fit the code.

Let's move on to ConAm's attempt to hide behind ORS197.307(4). No one in our group are attorneys, but we are intelligent people who have done a lot of research on this. While we could be wrong, this is our understanding. Since the law is subject to interpretation and thus why we have the court system, let's just say that we think there is enough here that an attorney could take to LUBA.

197.307 states:

> (1)The availability of affordable, decent, safe and sanitary housing opportunities for persons of lower, middle and fixed income, including housing for farmworkers, is a matter of statewide concern.
>
> (2)Many persons of lower, middle and fixed income depend on government assisted housing as a source of affordable, decent, safe and sanitary housing.
>
> (3)When a need has been shown for housing within an urban growth boundary at particular price ranges and rent levels, needed housing shall be permitted in one or more zoning districts or in zones described by some comprehensive plans as overlay zones with sufficient buildable land to satisfy that need.
>
> (4)Except as provided in subsection (6) of this section, a local government may adopt and apply only clear and objective standards, conditions and procedures regulating the development of needed housing on buildable land described in subsection (3) of this section. The standards, conditions and procedures may not have the effect, either in themselves or cumulatively, of discouraging needed housing through unreasonable cost or delay.

Has ConAm told us what the rents are going to be for this development? If they want to apply ORS197.307 to their application, I think they need to confirm that rents will be at a certain level to fit the "low income" criteria that 197.307 applies to.

We also find it interesting that we are applying an ORS Housing statute to a commercially zoned property. Let's not forget this is an OBC (commercially zoned) space. Perhaps a case like this going to LUBA would clear up this issue. Can you apply a housing statute meant to protect developer's right for residential building to a commercially zoned parcel?

The Oregon Secretary of State gives us an "interpretation of Goal 10 Housing" where we find ORS197.307 http://arcweb.sos.state.or.us/pages/rules/oars_600/oar_660/660_008.html

Section 660-008-0005 in the Secretary of State page defines "buildable land" under section 10 as:

> 2) "Buildable Land" means residentially designated land within the urban growth boundary, including both vacant and developed land likely to be redeveloped, that is suitable, available and necessary for residential uses. ...

This is OBC commercially designated land. This is not "residentially designated" land. If we look at the "2013 Residential Units and Buildable Land Inventories" on the City of West Linn's website, this parcel has not been set aside for residential use. http://westlinnoregon.gov/sites/default/files/fileattachments/maps_gis/page/8479/rubl_01_map.pdf . There is plenty of other land that has been designated by the city for residential use. ORS 197.307 should only apply to the parcels designated as residential per the States definition.

Also, what other state statutes can be applied to this project? We know what the developer wants applied. But can the City of West Linn apply other state statutes based around economic development? For instance, ORS254.580 states

> Local governments, as defined in ORS 174.116 (Local government and local service district defined), shall participate in the implementation of the state economic development strategy developed under ORS 284.570 (Development of state economic development strategy) by demonstrating a willingness to:
>
> (1) Coordinate local economic development plans with the state economic development strategy
> (2) Expedite amendments to comprehensive plans and land use regulations

The city staff has just handed a new EOA over to the planning department for approval. The EOA is a statewide mandate, so again we are talking about something on the state level. In the staff presentation of the EOA, it states:

> **Commercial and Mixed Use Land Need and Parcel Requirements** As indicated in Exhibit 27, the City's preferred Scenario B estimates a demand for 27 acres of net new commercial vacant land and five (5) acres of vacant mixed use land, for a total demand of 32 acres. With a vacant commercial and mixed use land supply of 15.8 acres, the City has a **deficit of 16.2 acres to meet the expected level of commercial job growth for West Linn.** However, this need may be addressed by the surplus of more than 19 acres of redevelopable commercial and mixed use land

Yet, this is a 7 acre mixed use parcel with a total of 2,000 square feet of commercial space being developed? Was this 7 acres figured into the EOA? We assume so which puts us at a bigger deficit of usable commercial land because, as we already addressed, a 300 square foot office may serve to employ one or two individuals in West Linn. Let's say a total of 14 new jobs could be created with this development. 14 jobs for 7 acres of commercial land. The current proposed use of this property will do nothing to help West Linn with its future employment demands.

Let's take a look at Oregon's Statewide Planning Goals and Guidelines, Goal 9: Economic Development. http://www.oregon.gov/LCD/docs/goals/goal9.pdf Comprehensive Plans for urban areas shall:

> 3. Provide for at least an adequate supply of sites of suitable sizes, types, locations, and service levels for a variety of industrial and commercial uses consistent with plan policies
> 4. **Limit uses on** or near sites zoned for specific industrial and commercial **uses to those which are compatible with proposed uses.**

Again, is the City adhering to the State economic development goals by allowing a commercial parcel to be developed with 95% residential use? The State specifically tells us that we should "limit uses" for our commercially zoned properties to those that are "compatible with proposed uses". Again, the "purpose" of the OBC to "provide for groups of businesses" in "centers…provide opportunities for employment…locate office where it can support other commercial uses…". Mixed use an alternative option but not the main use for this zone. This project does not provide enough commercial use to fit the zone criteria. LUBA, we believe,

would surely side with the City for protecting a parcel based on the criteria that this project is not a prescribed usage for the zone

Which leads us to ask, which Oregon Planning Goal do we adhere to? Goal 2 which is where the "needed housing" statute derives from, or Goal 9 where Economic Development is concerned? Again, a commercially zoned property should be judged against the Goal 9 guidelines instead of the Goal 2 guidelines.

That brings us to West Linn's Comprehensive Plan. ConAm points to the residential section of West Linn Comprehensive Plan in their application. However, since this is a commercial zone, the part of the Comprehensive Plan that refers to commercial properties trumps the Comp's Plan's references to residential lands. As a reminder, here is what the OBC Zone Code says:

> "The purpose of this zone is to provide for groups of business and offices in centers, to accommodate the location of intermediate uses between residential districts and areas of more intense development, to provide opportunities for employment and for business and professional services in close proximity to residential neighborhoods and major transportation facilities, to expand the City's economic potential, to provide a range of compatible and supportive uses, and to locate office employment where it can support other commercial uses. The trade area will vary and may extend outside the community. This zone is intended to implement the policies and criteria set forth in the Comprehensive Plan."

Let's look at what the Comprehensive Plan says about "commercial" land.

Section 2 refers to "Neighborhood Commercial Development".

> "Neighborhood commercial centers are intended to provide residents with opportunities to walk or bike to shops to purchase items or services needed on a frequent basis (i.e., weekly or more frequently). They also provide opportunities to reduce auto travel. They are to be very limited in size and include appropriate small businesses."

The Comp plan also refers to the "mixed use". In this section, it refers to:

> "Metro adopted the 2040 Growth Concept that includes a number of "design types" … mixed use concepts that incorporate residential and commercial uses within compact, pedestrian-friendly environments. Particular design standards apply to these design types to encourage use of alternatives to the automobile and promote a stronger sense of community"

Lastly, the set "Goals" in the Comp Plan are:

> 2. Consider the development of commercial and office facilities in West Linn that will increase employment opportunities, reduce dependence on services outside of the City, and promote energy-efficient travel and land use patterns, while recognizing that there will be limits imposed by West Linn's topography and limited available land.

This plan does not meet any criteria set up in the West Linn Comprehensive Plan for commercial and/or mixed use zones. As we already discussed, this project does not create a walkable environment, if anything, it increases auto trips. Even residents within the development will not be able to walk easily to all the commercial spaces. The slope of the lot makes it difficult to walk or bike to the businesses located at the top of the project. People would drive to the businesses at the top of the hill if they live at the bottom or drive to the bottom of the hill if they live at the top to avoid the one way hike.

In the Oregon State Planning Goals, it makes several references to city's Comp plans as a means for justifying planning decisions. Per ORS 197.712(c)

> (c) Comprehensive plans and land use regulations shall provide for at least an adequate supply of sites of suitable sizes, types, locations and service levels for industrial and commercial uses consistent with plan policies.

Many of the LUBA cases we found also refer to a city's Comprehensive Plan. One example a LUBA case that is similar has this quick summary:

> 30.2.3 Zoning Ordinances Zoning text amendments intended to permit a majority of lands zoned for recreational commercial uses to be used for residential development unrelated to recreational commercial uses are inconsistent with comprehensive plan policies that impose on the city an affirmative obligation to support development of the zone with recreational commercial uses.

We hate to be repetitive but THIS IS COMMERCIAL LAND. LUBA will certainly take into account that this is commercial land and per that state rules, a City's Comprehensive Plan can be cited in land use decisions. If this application is denied, ConAm has the burden to prove their mostly residential project is the best use of the land per the City's Comp plan and per the stated Economic goals (not housing). 2000 square feet does nothing to "increase employment activities, reduce dependence on services outside of the City and promote energy-efficient travel".

The Willamette Neighborhood Association states in its Comprehensive Plan:

> Those elements that make Willamette neighborhood special for us and reflect our values are seen in our commitments. We are committed to:
> 1. Safety for our community
> 2. Education and activities for children and adults.
> 3. Vibrant business growth, consistent with our historical downtown area standards
> 4. Communication and involvement with our citizens
> 5. Respectful use and care for the environment including our city, river, parks and trails
> 6. Well thought out neighborhood planning which sustains the value of the land
> 7. Systemic and fiscally responsible long-term planning, working with the neighborhood, community, city, county, and state partners.

While it is a given, as many citizens have attested to, this development will cause all sorts of traffic and safety issues so we don't need to discuss that. Our concern again is economic. #3 states "vibrant business growth". This project does not meet this objective. 2000 square feet out of a 7 acre parcel does not promote business growth. #6 is not met either. This development is a high density residential project disguised as a mixed use project which does meet our planning goals. We go back again to the purpose of the OBC zone and why the Willamette Neighborhood covets this zone: "to provide opportunities for employment and for business and professional services in close proximity to residential neighborhoods and major transportation facilities"

Perhaps if 2000 square feet was provided PER building we could agree. If this property was being properly developed per the intentions of the OBC "mixed use" option, businesses that you could typically see would be things like day care, coffee shop, beauty salon, medical or dental office, etc. as listed on the OBC zone page. We know none of these type of businesses can fit into 300 square feet of space, though ConAm would like to argue otherwise.

One more thing we found interesting. In Finding #15 of the application, it states that "the applicant is not proposing the construction of new streets". How does a "customer" patronize these "commercial" areas if there are no streets? There is only one "business" on each building. So a customer would essentially need to walk the length of a building to reach another business. Again, the way this is designed, these commercial spaces, aside from maybe the ones facing Tannler, will be empty. With no way to get customers, who will lease these spaces? Even if

there are streets, there are no parking spaces for the "businesses". With the application using 20 spaces of parking on Tannler as a means of meeting their parking requirements, there will be nowhere for a customer to park and patronize these businesses.

We can come up with several different scenarios that better fit the OBC zone and we've described some of them.

The existing plan could be used if commercial space occupied the ENTIRE bottom floor. There could be a full strip along Tannler that is commercial. The WNA suggested this to ConAm in our meetings with them. They came back and said it was not feasible. We disagree.

A popular type of development nowadays are retirement "villages". These usually incorporate services like a café, hair salon, alternative medicine, massage therapists, fitness centers, tennis facilities, doctor's offices, etc. along with residential units. These are highly profitable and something that we believe would be in high demand in an area like West Linn. This would satisfy many of the other neighbors whose concern is traffic. Those in retirement communities such as this are less reliant on automobiles as all their needs and services can be handled within the complex. Organized bus tours are a popular mode of transportation of residents outside of the facility. Thus, we believe this type of development would be welcomed by all.

Has light industrial uses been looked at such as a racquetball club, warehouse space for a CrossFit type of business? What about a hotel?

We know the owner of this property believes that there no demand for office space. But the OBC Zone lists several other options available to him that we don't think have been properly explored. We don't want the owner not to be able to develop this property. It just needs to be developed in a way that best suits the zone and the current application does not do this.

Please vote no on this project for all the reasons explained above and as summarized in the first page of this document.

Thank you for your time.

Sincerely

A group of neighbors in Willamette Primary area (as listed below alphabetically with resident's address).

Laura Bergstrom
1333 10th St.

Kathy and Troy Buzalsky
1228 14th St

Diana Feke
1250 11th St.

Derek Hines
1280 10th St.

Shannen Knight
1291 11th Street

Stacey Krish
1263 10th Street

Margaret Matthies
1531 11th Street

Emily and Ryan McKenna
1257 11th St.

Mary Ann Perlot
1973 4th Avenue

Schroeder Family
2040 Leslies Way

Boyd, John

From: Jesse Knight <rosecityre@gmail.com>
Sent: Tuesday, August 25, 2015 6:55 PM
To: Boyd, John; Thornton, Megan
Subject: Fwd: Con Am Project

I think this needs to be forwarded on to you as ex parte communication.

Jesse Knight
Willamette Realty Group
971-219-4939
rosecityre@gmail.com

----- Forwarded message -----
From: "Kathie Halicki" <khalicki@msn.com>
To: <cwl_planningcommission@westlinnoregon.gov>
Subject: Con Am Project
Date: Tue, Aug 25, 2015 6:17 PM

Dear Planning Commissioners,

I have multiple issues with the Con Am proposed project on Tannler and Blankenship. There were few answers given to many questions asked, at the SONA and WNA meetings.

I see multiple safety issues:

1). What is going to be done to the intersection of Tannler and Blankenship, since it is already an F rated intersection? How will it be mitigated?

2). What is Con Am going to do to help alleviate existing traffic/safety issues on 10th Street, Blankenship, 8th Street, and Tannler? Haggens has already had some accidents in their parking lot, imagine the mass of cars turning left into their parking lot to cut across and turn right out of lot to get onto 10th. (Before adding more traffic to a congested and dangerous situation). What agreements does Con Am have with ODOT, WL, and Haggens to rectify existing safety issues on the above mentioned streets? We all read weekly, in the Tidings, of the multiple accidents on these streets and 205.

3). Putting 20 parking spaces on Tannler (common sense says there will be more, guest parking - renter/commercial overflow) is just going to make Tannler more dangerous. In the winter Tannler will look like Mt. Scott, (bumper cars sliding down the hill). De-icer sprayed all over parked cars.

4). What is going to be done to keep development traffic from going up Tannler and through the neighborhood, thus adding more traffic and making our streets more dangerous? Is Con Am going to put a planted median going up Tannler to prevent from development turning left onto Tannler and going into the neighborhood (as previously presented)?

5). What is to be done during peak traffic times to make sure First Responders can get through quickly?

6). There are life and death issues already existing at the nursing home on Debok. This project would then add to the time of arrival (and to medical assistance/hospital) with added traffic, thus perhaps costing people their lives. Adding to this, the Con Am development would then negatively effect businesses that are in the business of saving lives, by increasing their response time ie: police, state troopers, TVFR, and AMR.

7).This development would negatively effect 10th Street, with more traffic. Adding more traffic would prohibit fire and police from getting out of their stations quickly (no place for traffic to pull over to let them go) during traffic times. This would effect our entire city.

8).Did the traffic study take into account the 50% to 65% existing vacancy rate of already built office buildings on the property next door? What will happen with 100% occupancy?

9). What is Con Am going to do about the winter flooding at the bottom of Tannler, coming from Blankenship property? Last winter this was still happening. This project would remove most of the plant and soil conditions that help prevent erosion and flooding, substituting concrete which adds to flooding problems.

10). This project would negate the "walk-ability" of the area, that we already have. Crossing Blankenship at Tannler, on foot or by car is dangerous already.

11). Please note that there is an existing bus stop on Blankenship. With the added traffic we could lose it, due to buses not being able to maintain a set schedule.

12). This development will cause an entire housing development (much of Willamette Neighborhood) to be locked in or out, due to traffic. (Willamette Falls Drive/205 to Blankenship and Debok to the Tualatin River). People would not be able to get in or out. Many already take Blankenship to get to Willamette or 205 due to excessive traffic.

Other issues to ponder:

1). What is going to happen to the acreage of trees at the top of the property?

2). What about the rain water retention tank?

3). Is the creek that runs from top to bottom of property on Tannler, taken into account? It is constantly "flowing" (at peak of heat of summer that side is a muddy squishy mess). What is to be done with that?

4). What about air conditioners? How is Con Am going to control the heat, light, and noise pollution? How will Con Am mitigate the effects of these on the plants and wildlife?

5). Tandem garages. We all know they don't work for 2 cars. The only way they work is if there is a garage door on the front and back of garage. They will be used for storage, thus not for parking. Con Am said that they would "police" that.

6). How do we get Con Am to "police parking" when they won't contractually commit to a designated time of owning and managing said development?

7). How long will it take Con Am "until build out"?

8). Why can't all of the commercial suites be on the same street on the inside of the complex, instead of scattered around?

9). Commercial to residential ratio. Intent of OBC vs. what can be done.

10). Commercial may NEVER be leased out!! Defeats OBC purpose.

11). Apartments have average of 5-7% vacancy rate (according to Con AM). That would mean that worst case scenario is ALL of the commercial and 13 (or so) of the apartments would be vacant at any one time. We already have vacancy on one side of 205, do we want more? This is the "gateway" to West Linn. Do we want it to look like no one wants to work or live here? That would definitely effect housing prices.

There are many points to ponder and question. Please deny this application until all of us can come up with something safe to build, that would not adversely effect our community and our safety.

Kathie Halicki
2307 Falcon Dr.
West Linn, Or.

Shroyer, Shauna

From: Pelz, Zach
Sent: Tuesday, August 25, 2015 3:20 PM
To: Shroyer, Shauna
Subject: FW: ConAm
Attachments: LTR-City of West Linn-Revised Mitigation Measures-150821 REV.pdf

Zach Pelz, Associate Planner
Planning and Building, #1542

West Linn

From: Brent Ahrend [mailto:BAhrend@mcknze.com]
Sent: Tuesday, August 25, 2015 3:05 PM
To: Robinson, Michael C. (Perkins Coie); Kerr, Chris; Boyd, John; Pelz, Zach; Le, Khoi
Cc: Janet T. Jones; 'Mike Mahoney (mmahoney@conam.com)'; Rob Morgan (rmorgan@conam.com); Mr. Jeff Parker; King, Seth J. (Perkins Coie); Stephenson, Garrett H. (Perkins Coie); Thornton, Megan; bkc@dksassociates.com; Calvert, Lance
Subject: RE: ConAm

All,

Our revised letter with updated mitigation measures is attached.

Brent T. Ahrend, PE
Senior Associate | Asst Department Head – Transportation Planning

MACKENZIE.
DESIGN DRIVEN I CLIENT FOCUSED

Architecture · Interiors · Engineering · Planning

P 503.224.9560 **W** mcknze.com **C** vcard

RiverEast Center
1515 SE Water Ave, Suite 100
Portland OR 97214

From: Robinson, Michael C. (Perkins Coie) [mailto:MRobinson@perkinscoie.com]
Sent: Tuesday, August 25, 2015 2:59 PM
To: Ckerr@westlinnoregon.gov; Boyd, John; Pelz, Zach; Le, Khoi
Cc: Brent Ahrend; Janet T. Jones; 'Mike Mahoney (mmahoney@conam.com)'; Rob Morgan (rmorgan@conam.com); Mr. Jeff Parker; King, Seth J. (Perkins Coie); Stephenson, Garrett H. (Perkins Coie); Thornton, Megan
Subject: ConAm

Chris, as we just discussed and based on the discussion between DKS and Mackenzie, the Applicant's understanding is that the City wants the Applicant to signalize the Blankenship driveway as mitigation for the application's traffic impacts as required by CDC 55.125. The Applicant has agreed to this mitigation.

You asked me to propose a condition of approval for consideration by the City. The following condition is feasible to be achieved:

"The applicant shall install a traffic signal at the site's Blankenship driveway prior to the first occupancy on the site."

Michael C. Robinson | **Perkins Coie LLP**
PARTNER
1120 N.W. Couch Street Tenth Floor
Portland, OR 97209-4128
D. +1.503.727.2264
C. +1.503.407.2578
F. +1.503.346.2264
E. MRobinson@perkinscoie.com

MACKENZIE.

DESIGN DRIVEN I CLIENT FOCUSED

August 21, 2015 ***(Revised August 25, 2015)***

City of West Linn
Attention: Lance Calvert
22500 Salamo Road
West Linn, OR 97068

Re: **Tannler Mixed-Use Project**
Revised Mitigation Measures
Project Number 2130529.08

Dear Mr. Calvert:

Mackenzie is providing this letter to present our revised mitigation measures and updated analysis for the Tannler Mixed Use project. This letter supplements our July 20, 2015, Updated Transportation Impact Analysis (TIA) report, and reflects comments and discussions provided by the City, ODOT, and the City's traffic consultant, DKS, regarding the TIA and its suggested mitigation measures. **For consistency, we have continued to assume the higher trip generation estimates from the TIA based on 210 apartments units, although the number of units has since been reduced to 180, which reduces the trip generation by 15 AM peak hour and 16 PM peak hour trips.**

With these revised mitigation measures, all study area intersections can meet the City's requirements to operate at level of service "D" or to mitigate project impacts where an intersection is already not meeting the standards. For unsignalized intersection operation, the critical stop controlled lane results are reported, consistent with the City's standard practice and Transportation System Plan. Further, the intersection of Blankenship Road/Salamo Road/10th Street will meet ODOT's standard of a volume to capacity ratio (v/c) of 0.85 or lower with the recommended mitigation.

In summary, the recommendations include:

1. Install a median on the Tannler Drive approach to Blankenship Road to limit southbound traffic to right turns only. No restrictions are proposed for the Haggen Shopping Center driveway, and left turns from Blankenship Road eastbound to Tannler Drive would still be allowed. A sketch of the proposed mitigation at this intersection is presented in Figure 3.

2. Signalize the Site Access/West Haggen Driveway intersection with Blankenship Road to accommodate the increase in left-turning vehicles from the site and enhance the pedestrian crossing of Blankenship Road.

3. Provide a second left-turn lane on the Salamo Road approach to 10th Street by widening the roadway and intersection and installing necessary traffic signal equipment. No changes are proposed to the signal timing or phasing. The two left-turn lanes should provide 225 feet of storage. A sketch of the proposed mitigation at this intersection is presented in Figure 4.

4. Pay a proportionate share, in the amount of $24,010, towards the cost of improvements at the 10th Street/8th Avenue/8th Court intersection and the 8th Court extension. (No change from TIA.)

The revised recommendations outlined in items 1 - 3 above are addressed below. Recommendation 4 is unchanged from the TIA.

Tannler/Blankenship

The TIA initially recommended striping the Tannler Drive approach to Blankenship Road to provide separate lanes for left and through/right movements. City staff and their traffic engineering consultant indicated this proposed mitigation was not acceptable, stating drivers are already using the existing width on the approach as if separate lanes were provided. Upon further review, we noted vehicles turning left or traveling across Blankenship Road will use the center of the Tannler Drive approach, allowing right turning vehicles to pass on the right without waiting behind these other vehicles. A photo demonstrating this lane utilization is presented in Figure 5.

We have updated the pre- and post-development intersection capacity analysis for this intersection based on the current separate lane use of Tannler Drive with the results reflected in Table 1 below. As suggested by the City, this change more accurately reflects the current operation, and shows the through/left turns experience a level of service "F" in the PM peak hour regardless of the project.

A number of mitigation options were considered to address project impacts on the Tannler Drive intersection. A traffic signal would not be allowed due to the proximity to the 10th Street signal, and a full median on Blankenship Road would push significant traffic volumes to the west driveway approaches for the Haggen Shopping Center and shared driveway for the existing offices and the project.

It was determined a partial turn restriction to eliminate through and left-turn movements from the Tannler Drive approach would allow the intersection to operate at a level of service "E," which is better than pre-development conditions, while allowing full movements to continue at the Haggen Center east driveway. This turn restriction would be accomplished by installation of a "pork chop" type median on the approach, along with supplemental signing and striping. A reroute of existing and project traffic would be expected. Through trips from Tannler Drive to the Haggen Center would instead turn right to Blankenship, and then left at the west Haggen Center driveway. Existing traffic from the neighborhood that turns left onto Blankenship would reroute to Salamo Road via Greene Street, Bland Circle, or Remington Drive. Trips from the project would reroute to the shared driveway on Blankenship Road as this is the most direct route to I-205 and points south. Figures 1A and 2A present the anticipated reroute of existing and project traffic.

The resulting reroute due to the left-turn restriction from Tannler Drive includes a total of 96 AM peak hour trips and 46 PM peak hour trips. Greene Street is classified as a Neighborhood Route, and Bland Circle is classified as a collector road (Figure 8-1 of the TSP), both of which are appropriate classifications for traffic traveling between the neighborhood and an arterial roadway such as Salamo Road. These trips will also be added to Salamo Road approach at 10th Street, which are addressed with the mitigation measure proposed below.

Figures 2A and 2B present the AM and PM peak hour post-development volumes with the reroutes from the proposed mitigation at Tannler Drive. For purposes of tracking the reroute volume for this analysis, we have shown all trips traveling on Greene Street; however, some trips would use Bland Circle or Remington Drive instead.

Blankenship/Site Access

As a result of shifting an additional 23 AM and 15 PM peak hour trips from Tannler Drive to this driveway, the site access on Blankenship Road falls to an LOS E with the existing stop control. In order to mitigate the project's impacts at this approach and to provide for enhanced pedestrian safety crossing Blankenship Road, signalization is proposed. Signalization at this intersection will reduce delays for vehicles leaving the site and adjacent office complex during the PM peak hour, which will make this route more attractive than traveling through adjacent neighborhoods. The installation of a traffic signal has been discussed with City staff and the City's transportation consultant, and they have agreed a traffic signal is an acceptable mitigation measure at this location and will address the City's level of service standards.

A queuing analysis was conducted for this intersection to ensure anticipated vehicle queues do not block other intersections or spill back to the 10th Street corridor. The results of the queuing analysis are provided in Table 2 below.

Salamo/Blankenship/10th Street

The TIA recommended striping and signal changes on the Salamo Road approach to 10th Street in order to provide a shared left/through lane. While this recommendation was consistent with conditions of approval for a prior development application on the site, ODOT staff have indicated they would not allow any changes to the traffic signal timing and phasing at this intersection due to the close coordination with the southbound I-205 ramps. Instead, ODOT suggested the addition of a second left-turn lane, which would still provide a separate through lane.

The addition of a second left-turn lane would require widening of Salamo Road, widening in the intersection to provide two receiving lanes on 10th Street, and traffic signal modifications necessary for the widening.

Capacity and queuing calculations have been prepared with this mitigation on Salamo Road. We have included a lane utilization factor for the westbound left-turn lane based on a 47/53 split during the AM peak hour and a 36/64 split during the PM peak hour, determined from specialized counts at this intersection from the July 20 TIA. These lane splits resulted in a lane utilization factor of 0.94 in the AM peak hour and 0.78 in the PM peak hour, and reflect the higher demand for traffic traveling to the I-205 southbound on-ramp. Results are presented in the table below, and show even with the rerouted traffic, the intersection will meet ODOT standards and will operate better than pre-development conditions.

Queuing calculations also show improvements, especially on the Salamo Road approach, where the westbound through queue decreases from 725 to 225 during the AM peak hour. Table 2 presents a comparison of the queuing changes for the lanes with changes in volume. For all other lanes, the volume and signal timing did not change from post-development conditions presented in the TIA.

TABLE 1 – INTERSECTION OPERATION SUMMARY				
Intersection	Peak Hour	2017		
		Pre-Development	Post-Development	Post-Development with Proposed Mitigation
Blankenship Road/Site Access/Haggen's Access	AM	0.149-C-15.3	0.209-C-19.7	0.46-A-10.0
	PM	0.154-C-23.1	0.340-D-30.0	0.48-B-10.5
Blankenship Road/Tannler Drive	AM	0.420-D-29.2	**0.700-F-52.0**	0.019-C-21.7
	PM	**0.454-F-56.5**	**0.863-F-132.4**	0.274-E-46.3
Blankenship Road/Salamo Road/10th Street	AM	**0.85-D-36.7**	**0.89-C-33.3**	0.69-B-19.0
	PM	0.68-C-25.1	0.77-C-25.9	0.70-C-21.4

Note: Capacity results are reported as v/c-LOS-Delay
Results in **BOLD** font exceed capacity standards.
City standard – LOS D, or no worse than pre-development conditions
ODOT standard – v/c of 0.85

As noted in the table above, all intersections will operate at City and ODOT standards with the addition of project trips and the proposed mitigation measures. While the Tannler/Blankenship intersection would operate at a level of service "E," it is better than the pre-development condition for the intersection. We would also note this LOS "E" is for left turns from the Haggen Center east driveway, and these drivers also have the option of turning left from the west driveway at the center, which is expected to have less delay with the proposed traffic signal.

TABLE 2 – AM AND PM PEAK HOUR 95TH PERCENTILE QUEUES (FEET)					
Intersection	Movement	Available Storage	2017		
			Pre-Development	Post-Development	Post-Development with Mitigation
Blankenship Road/Site Access/Haggen's Access	EB Lt	440	25/25	25/25	25/25
	EB Th+Rt	400	NA	NA	125/175
	WB Lt	100	25/50	25/50	50/50
	WB Th+Rt	270	NA	NA	125/125
	NB Lt+Th+Rt	100	50/75	50/75	75/75
	SB Lt+Th+Rt	75+	25/50	50/75	75/100
10th Street/Blankenship Road/Salamo Road	EB Th	240	100/150	125/175	125/175
	EB Rt	190	150/125	**200/**150	175/175
	WB Lt	180	**300/275**	**275/275**	**225/200**
	WB Th	500+	500/325	725/475	100/175

Results are presented for AM/PM queues
BOLD font indicates available storage is exceeded

As noted in the queuing table above, the proposed mitigation will significantly reduce the queues from pre-development conditions on the Salamo Road approach. We recommend the two left-turn lanes provide 225 feet of storage, which is an increase from the existing 180 feet.

SUMMARY

Based on this addendum to the July 20, 2015, TIA, and revised recommended mitigation measures, traffic impacts of site development will be addressed in accordance with City of West Linn and ODOT standards. The analysis is based on the higher number of residential units originally proposed, so the actual intersection operations will be slightly better than presented here.

In summary, the revised recommendations include:

1. Install a median on the Tannler Drive approach to Blankenship Road to limit southbound traffic to right turns only. No restrictions are proposed for the Haggen Shopping Center driveway, and left turns from Blankenship Road eastbound to Tannler Drive would still be allowed. See Figure 3.

2. Signalize the Site Access/West Haggen Driveway intersection with Blankenship Road to accommodate the increase in left-turning vehicles from the site and enhance the pedestrian crossing of Blankenship Road.

3. Provide a second left-turn lane on the Salamo Road approach to 10th Street by widening the roadway and intersection and installing necessary traffic signal equipment. No changes are proposed to the signal timing or phasing. The two left-turn lanes should provide 225 feet of storage. See Figure 4.

4. Pay a proportionate share, in the amount of $24,010, towards the cost of improvements at the 10th Street/8th Avenue/8th Court intersection and the 8th Court extension. (No change from TIA.)

Please contact us if you have any questions.

Sincerely,

Brent Ahrend, PE
Senior Associate | Traffic Engineer

Enclosure(s): Figures
Capacity Calculations
Queuing Calculations

c: Khoi Le, Zach Pelz – West Linn
Avi Tayar, Joshua Brooking – ODOT
Michael Robinson – Perkins Coie
Jeff Parker – Parker Development
Rob Morgan – Conam
Janet Jones – Mackenzie

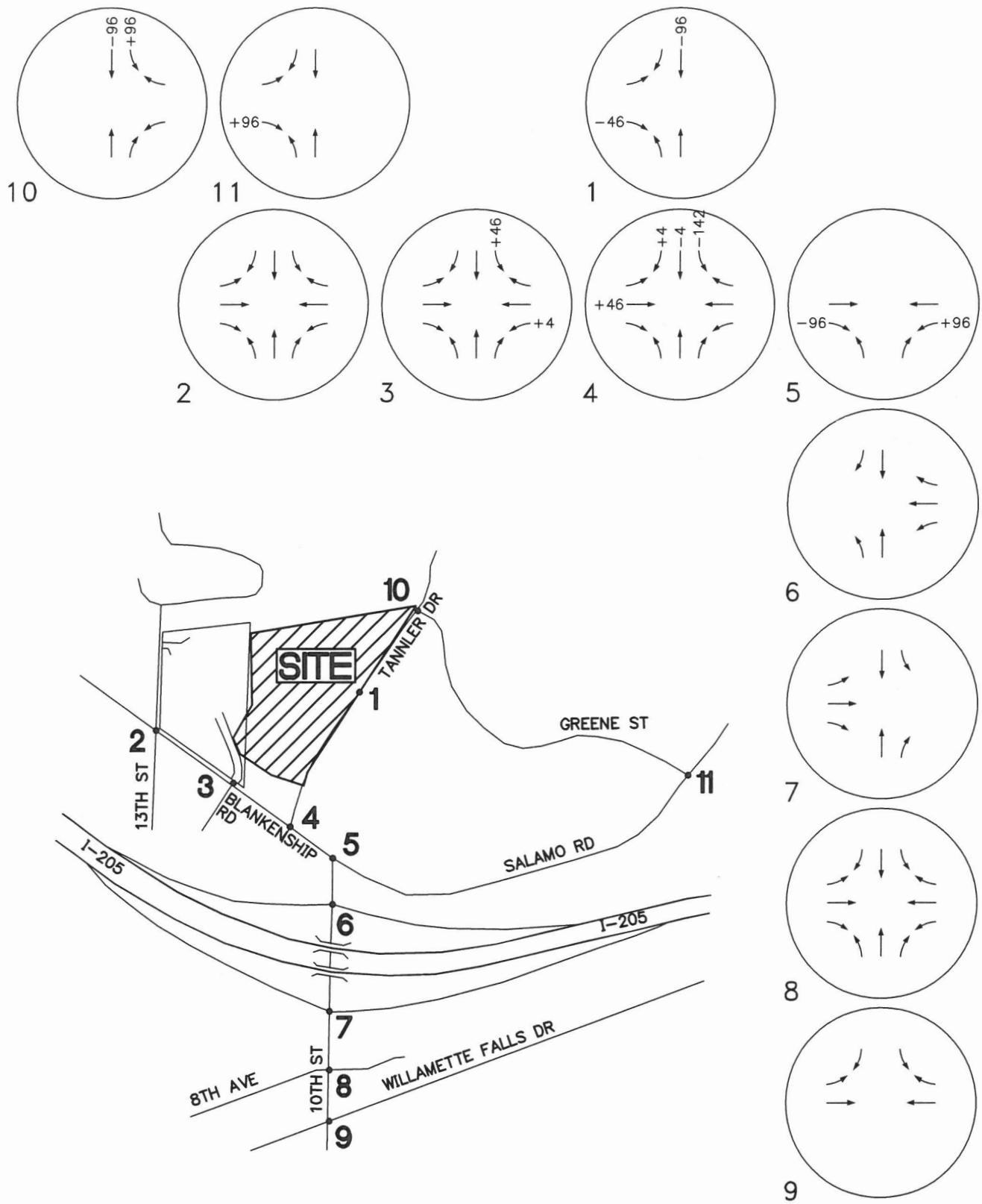

Portland 503.224.9560 Vancouver 360.695.7879 Seattle 206.749.9993
www.mcknze.com
Architecture • Interiors
Planning • Engineering
MACKENZIE.

DATE: 08.24.15
DRAWN BY: JTJ
CHECKED BY: BTA
JOB NO: 2130529.08

2017 POST-DEVELOPMENT VOLUMES - AM PEAK HOUR MITIGATION REROUTE VOLUMES

TANNLER DRIVE MIXED-USE PROJECT
WEST LINN, OREGON

FIGURE
1A

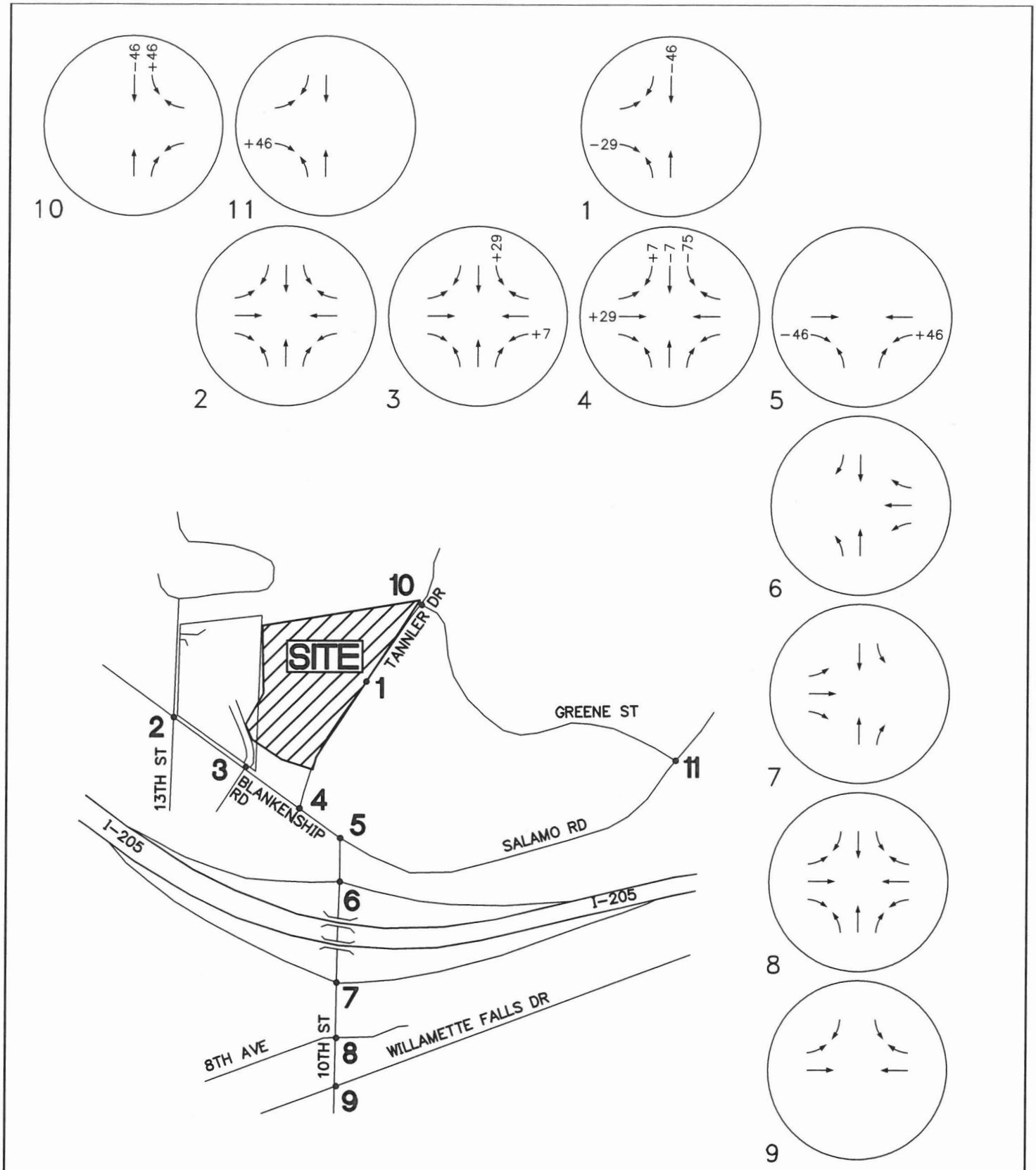

Portland 503.224.9560 Vancouver 360.695.7879 Seattle 206.749.9993
www.mcknze.com
Architecture ▪ Interiors
Planning ▪ Engineering
MACKENZIE.

DATE: 08.24.15
DRAWN BY: JTJ
CHECKED BY: BTA
JOB NO: 2130529.08

2017 POST-DEVELOPMENT VOLUMES - PM PEAK HOUR MITIGATION REROUTE VOLUMES

TANNLER DRIVE MIXED-USE PROJECT
WEST LINN, OREGON

FIGURE
1B

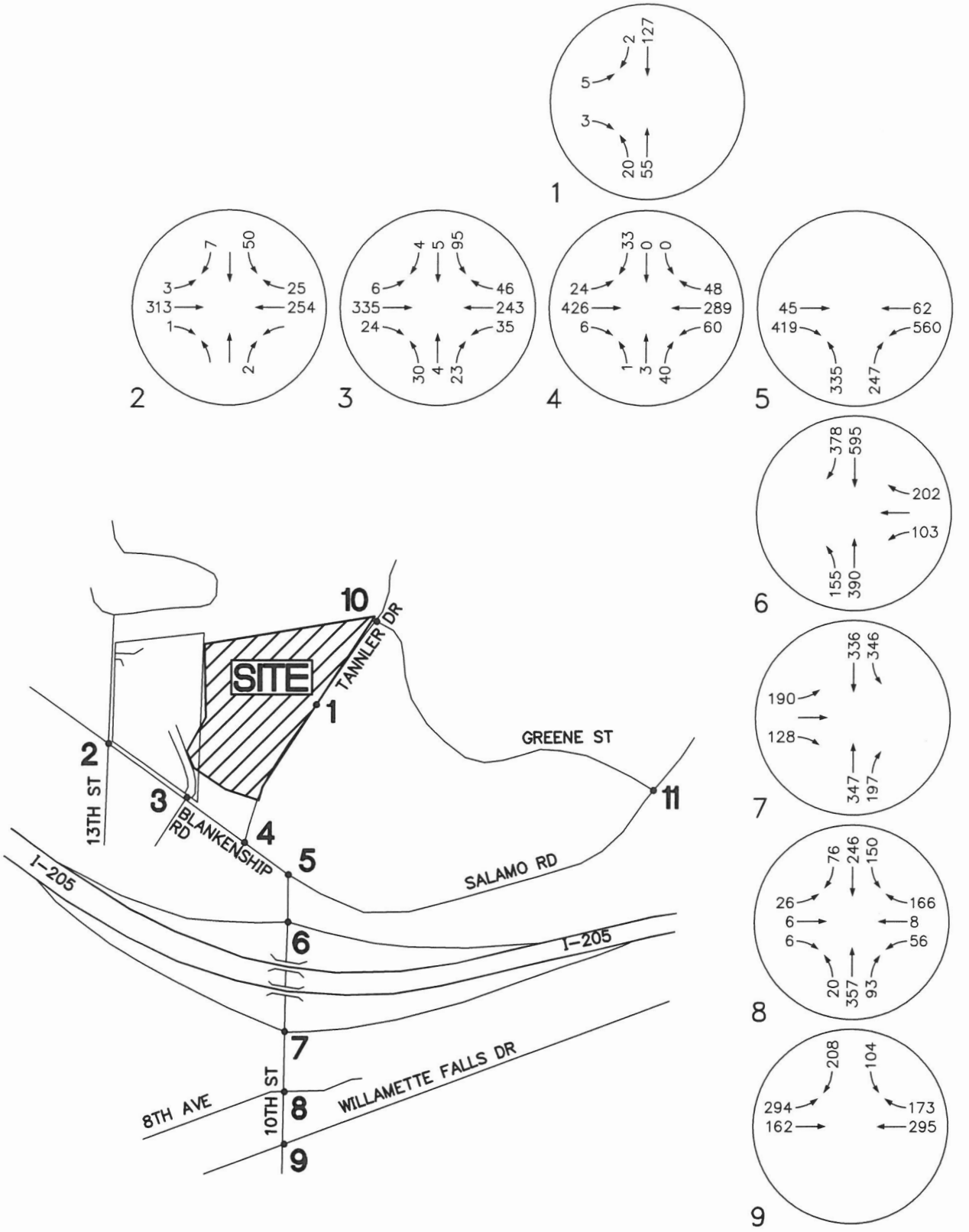

Portland 503.224.9560 Vancouver 360.695.7879 Seattle 206.749.9993
www.mcknze.com
Architecture • Interiors
Planning • Engineering
MACKENZIE.

DATE: 08.24.15
DRAWN BY: JTJ
CHECKED BY: BTA
JOB NO: 2130529.08

2017 POST-DEVELOPMENT VOLUMES - AM PEAK HOUR MITIGATION TOTAL VOLUMES

TANNLER DRIVE MIXED-USE PROJECT
WEST LINN, OREGON

FIGURE 2A

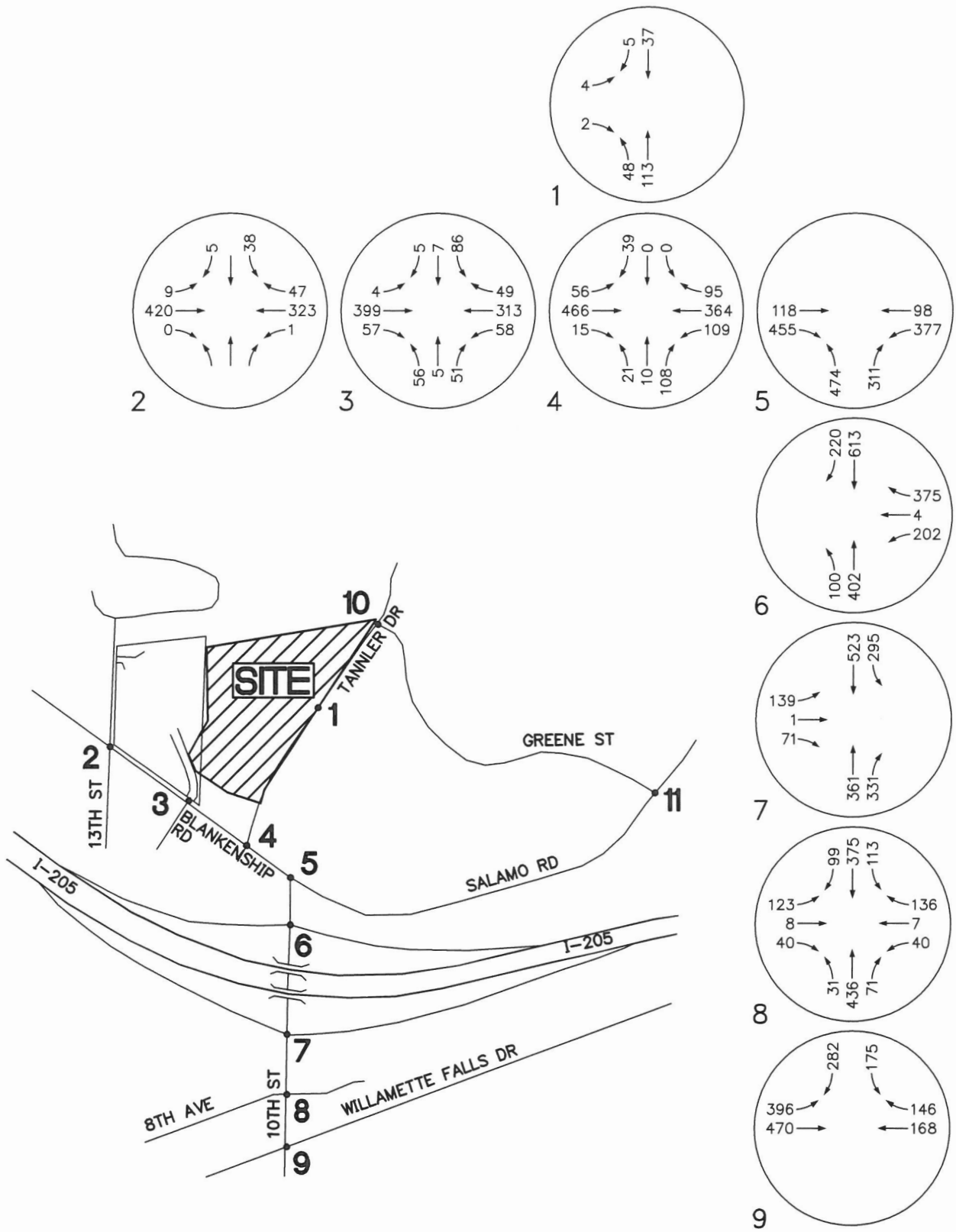

Portland 503.224.9560 Vancouver 360.695.7879 Seattle 206.749.9993
www.mcknze.com
Architecture ▪ Interiors
Planning ▪ Engineering
MACKENZIE.

DATE: 08.24.15
DRAWN BY: JTJ
CHECKED BY: BTA
JOB NO: 2130529.08

2017 POST-DEVELOPMENT VOLUMES - PM PEAK HOUR MITIGATION TOTAL VOLUMES

TANNLER DRIVE MIXED-USE PROJECT
WEST LINN, OREGON

FIGURE
2B


Proposed Mitigation
Right-out only on Tannler Drive
FIGURE
3
Google earth
100 ft
N

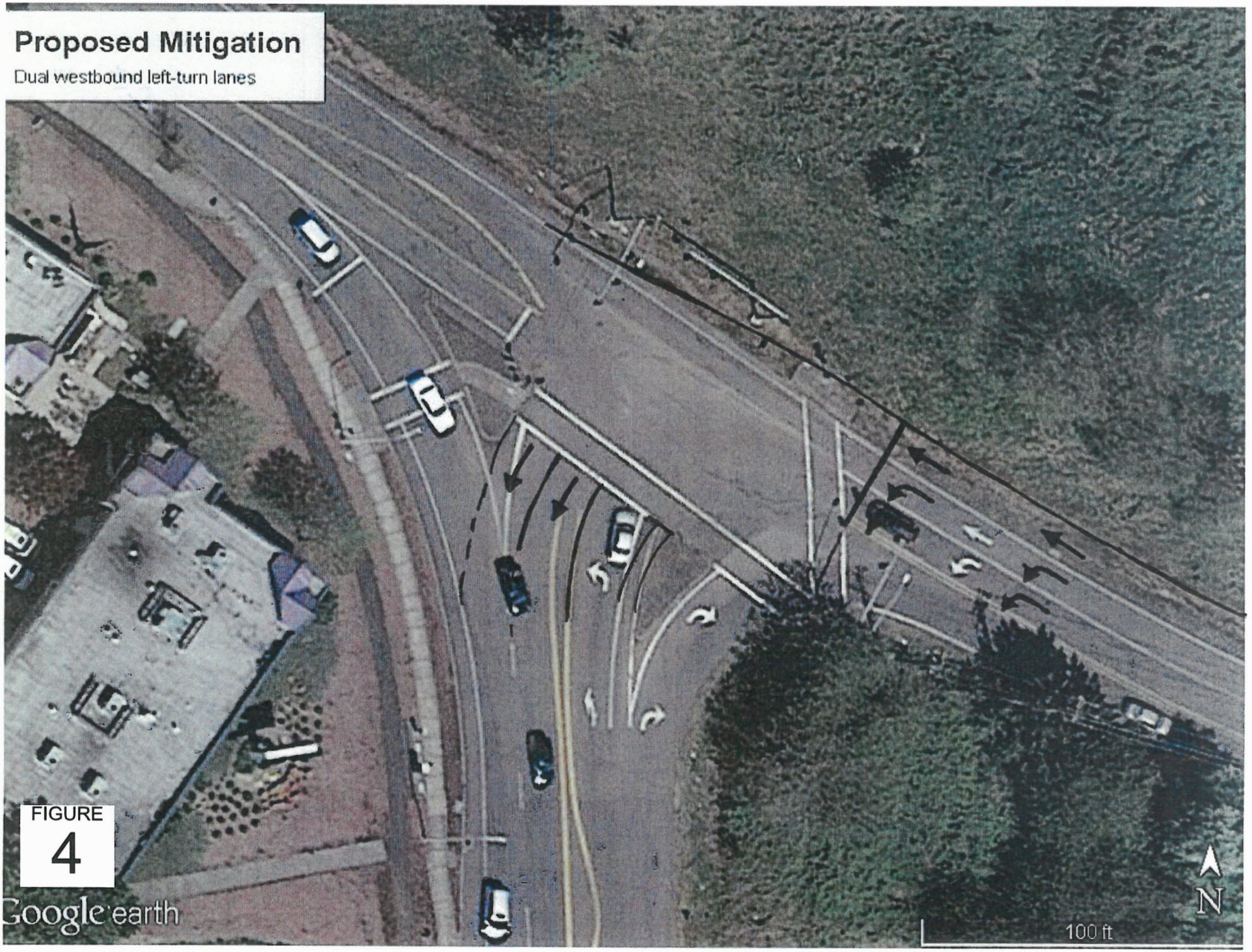
Proposed Mitigation
Dual westbound left-turn lanes
FIGURE
4
Google earth
N
100 ft

Tannler Drive Approach - Existing Lane Configuration

FIGURE
5

Intersection	
Int Delay, s/veh	4.5

Movement	EBL	EBT	EBR	WBL	WBT	WBR	NBL	NBT	NBR	SBL	SBT	SBR
Vol, veh/h	6	335	24	35	243	46	30	4	23	95	5	4
Conflicting Peds, #/hr	0	0	0	0	0	0	0	0	0	0	0	0
Sign Control	Free	Free	Free	Free	Free	Free	Stop	Stop	Stop	Stop	Stop	Stop
RT Channelized	-	-	None	-	-	None	-	-	None	-	-	None
Storage Length	50	-	-	50	-	-	-	-	-	-	-	-
Veh in Median Storage, #	-	0	-	-	0	-	-	0	-	-	0	-
Grade, %	-	0	-	-	0	-	-	0	-	-	0	-
Peak Hour Factor	90	90	90	90	90	90	90	90	90	90	90	90
Heavy Vehicles, %	0	3	0	3	6	19	0	0	5	0	0	0
Mvmt Flow	7	372	27	39	270	51	33	4	26	106	6	4

Major/Minor	Major1			Major2			Minor1			Minor2		
Conflicting Flow All	321	0	0	399	0	0	777	798	386	787	785	296
Stage 1	-	-	-	-	-	-	399	399	-	373	373	-
Stage 2	-	-	-	-	-	-	378	399	-	414	412	-
Critical Hdwy	4.1	-	-	4.13	-	-	7.1	6.5	6.25	7.1	6.5	6.2
Critical Hdwy Stg 1	-	-	-	-	-	-	6.1	5.5	-	6.1	5.5	-
Critical Hdwy Stg 2	-	-	-	-	-	-	6.1	5.5	-	6.1	5.5	-
Follow-up Hdwy	2.2	-	-	2.227	-	-	3.5	4	3.345	3.5	4	3.3
Pot Cap-1 Maneuver	1250	-	-	1154	-	-	317	321	655	312	327	748
Stage 1	-	-	-	-	-	-	631	606	-	652	622	-
Stage 2	-	-	-	-	-	-	648	606	-	620	598	-
Platoon blocked, %		-	-		-	-						
Mov Cap-1 Maneuver	1250	-	-	1154	-	-	302	308	655	288	314	748
Mov Cap-2 Maneuver	-	-	-	-	-	-	302	308	-	288	314	-
Stage 1	-	-	-	-	-	-	627	603	-	648	601	-
Stage 2	-	-	-	-	-	-	617	586	-	588	595	-

Approach	EB	WB	NB	SB
HCM Control Delay, s	0.1	0.9	16.1	24.7
HCM LOS			C	C

Minor Lane/Major Mvmt	NBLn1	EBL	EBT	EBR	WBL	WBT	WBR	SBLn1
Capacity (veh/h)	387	1250	-	-	1154	-	-	296
HCM Lane V/C Ratio	0.164	0.005	-	-	0.034	-	-	0.39
HCM Control Delay (s)	16.1	7.9	-	-	8.2	-	-	24.7
HCM Lane LOS	C	A	-	-	A	-	-	C
HCM 95th %tile Q(veh)	0.6	0	-	-	0.1	-	-	1.8

Intersection	
Int Delay, s/veh	1.7

Movement	EBL	EBT	EBR	WBL	WBT	WBR	NBL	NBT	NBR	SBL	SBT	SBR
Vol, veh/h	24	426	6	60	289	48	1	3	40	0	0	33
Conflicting Peds, #/hr	0	0	0	0	0	0	0	0	0	0	0	0
Sign Control	Free	Free	Free	Free	Free	Free	Stop	Stop	Stop	Stop	Stop	Stop
RT Channelized	-	-	None	-	-	None	-	-	None	-	-	None
Storage Length	50	-	-	150	-	-	-	-	0	-	-	0
Veh in Median Storage, #	-	0	-	-	0	-	-	0	-	-	0	-
Grade, %	-	0	-	-	0	-	-	0	-	-	0	-
Peak Hour Factor	94	94	94	94	94	94	94	94	94	94	94	94
Heavy Vehicles, %	25	3	0	7	6	0	7	0	0	0	0	0
Mvmt Flow	26	453	6	64	307	51	1	3	43	0	0	35

Major/Minor	Major1			Major2			Minor1			Minor2		
Conflicting Flow All	359	0	0	460	0	0	968	993	456	970	972	333
Stage 1	-	-	-	-	-	-	507	507	-	461	461	-
Stage 2	-	-	-	-	-	-	461	486	-	509	511	-
Critical Hdwy	4.35	-	-	4.17	-	-	7.17	6.5	6.2	7.1	6.5	6.2
Critical Hdwy Stg 1	-	-	-	-	-	-	6.17	5.5	-	6.1	5.5	-
Critical Hdwy Stg 2	-	-	-	-	-	-	6.17	5.5	-	6.1	5.5	-
Follow-up Hdwy	2.425	-	-	2.263	-	-	3.563	4	3.3	3.5	4	3.3
Pot Cap-1 Maneuver	1083	-	-	1075	-	-	228	247	609	235	254	713
Stage 1	-	-	-	-	-	-	539	543	-	584	569	-
Stage 2	-	-	-	-	-	-	571	554	-	550	540	-
Platoon blocked, %		-	-		-	-						
Mov Cap-1 Maneuver	1083	-	-	1075	-	-	203	227	609	203	233	713
Mov Cap-2 Maneuver	-	-	-	-	-	-	203	227	-	203	233	-
Stage 1	-	-	-	-	-	-	526	530	-	570	535	-
Stage 2	-	-	-	-	-	-	511	521	-	496	527	-

Approach	EB	WB	NB	SB
HCM Control Delay, s	0.4	1.3	12.3	10.3
HCM LOS			B	B

Minor Lane/Major Mvmt	NBLn1	NBLn2	EBL	EBT	EBR	WBL	WBT	WBR	SBLn1
Capacity (veh/h)	220	609	1083	-	-	1075	-	-	713
HCM Lane V/C Ratio	0.019	0.07	0.024	-	-	0.059	-	-	0.049
HCM Control Delay (s)	21.7	11.4	8.4	-	-	8.6	-	-	10.3
HCM Lane LOS	C	B	A	-	-	A	-	-	B
HCM 95th %tile Q(veh)	0.1	0.2	0.1	-	-	0.2	-	-	0.2

Movement	EBT	EBR	WBL	WBT	NBL	NBR
Lane Configurations						
Volume (vph)	45	419	560	62	335	247
Ideal Flow (vphpl)	1900	1900	1900	1900	1900	1900
Total Lost time (s)	5.5	5.5	5.5	6.0	5.5	5.5
Lane Util. Factor	1.00	1.00	*0.94	1.00	1.00	1.00
Frt	1.00	0.85	1.00	1.00	1.00	0.85
Flt Protected	1.00	1.00	0.95	1.00	0.95	1.00
Satd. Flow (prot)	1792	1583	3327	1827	1687	1404
Flt Permitted	1.00	1.00	0.95	1.00	0.95	1.00
Satd. Flow (perm)	1792	1583	3327	1827	1687	1404
Peak-hour factor, PHF	0.88	0.88	0.88	0.88	0.88	0.88
Adj. Flow (vph)	51	476	636	70	381	281
RTOR Reduction (vph)	0	80	0	0	0	55
Lane Group Flow (vph)	51	396	636	70	381	226
Heavy Vehicles (%)	6%	2%	2%	4%	7%	15%
Turn Type	NA	custom	Prot	NA	Prot	custom
Protected Phases	4	4 5 7	3	8	5 6 7	3 5 6 7
Permitted Phases		4				5 6 7
Actuated Green, G (s)	8.4	46.3	28.9	42.3	46.2	80.6
Effective Green, g (s)	8.4	46.3	28.9	42.3	46.2	80.6
Actuated g/C Ratio	0.08	0.46	0.29	0.42	0.46	0.81
Clearance Time (s)	5.5		5.5	6.0		
Vehicle Extension (s)	2.3		2.3	2.3		
Lane Grp Cap (vph)	150	732	961	772	779	1131
v/s Ratio Prot	0.03	c0.25	c0.19	0.04	c0.23	0.16
v/s Ratio Perm						
v/c Ratio	0.34	0.54	0.66	0.09	0.49	0.20
Uniform Delay, d1	43.2	19.2	31.3	17.3	18.7	2.2
Progression Factor	1.00	1.00	1.00	1.00	0.30	0.00
Incremental Delay, d2	0.8	0.6	1.5	0.0	0.5	0.0
Delay (s)	44.0	19.8	32.7	17.3	6.2	0.0
Level of Service	D	B	C	B	A	A
Approach Delay (s)	22.1			31.2	3.6	
Approach LOS	C			C	A	

Intersection Summary			
HCM 2000 Control Delay	19.0	HCM 2000 Level of Service	B
HCM 2000 Volume to Capacity ratio	0.69		
Actuated Cycle Length (s)	100.0	Sum of lost time (s)	27.5
Intersection Capacity Utilization	51.1%	ICU Level of Service	A
Analysis Period (min)	15		

c Critical Lane Group

HCM Signalized Intersection Capacity Analysis
3: Haggen's Access/Site Access & Blankenship Road

8/25/2015

Movement	EBL	EBT	EBR	WBL	WBT	WBR	NBL	NBT	NBR	SBL	SBT	SBR
Lane Configurations												
Volume (vph)	6	335	24	35	243	46	30	4	23	95	5	4
Ideal Flow (vphpl)	1900	1900	1900	1900	1900	1900	1900	1900	1900	1900	1900	1900
Total Lost time (s)	5.0	5.0		5.0	5.0			5.0			5.0	
Lane Util. Factor	1.00	1.00		1.00	1.00			1.00			1.00	
Frt	1.00	0.99		1.00	0.98			0.94			1.00	
Flt Protected	0.95	1.00		0.95	1.00			0.97			0.96	
Satd. Flow (prot)	1805	1830		1752	1716			1713			1809	
Flt Permitted	0.57	1.00		0.46	1.00			0.81			0.70	
Satd. Flow (perm)	1075	1830		851	1716			1421			1322	
Peak-hour factor, PHF	0.90	0.90	0.90	0.90	0.90	0.90	0.90	0.90	0.90	0.90	0.90	0.90
Adj. Flow (vph)	7	372	27	39	270	51	33	4	26	106	6	4
RTOR Reduction (vph)	0	3	0	0	8	0	0	22	0	0	2	0
Lane Group Flow (vph)	7	396	0	39	313	0	0	41	0	0	114	0
Heavy Vehicles (%)	0%	3%	0%	3%	6%	19%	0%	0%	5%	0%	0%	0%
Turn Type	pm+pt	NA		pm+pt	NA		Perm	NA		Perm	NA	
Protected Phases	1	6		5	2			4			8	
Permitted Phases	6			2			4			8		
Actuated Green, G (s)	21.6	20.9		23.2	21.7			7.7			7.7	
Effective Green, g (s)	21.6	20.9		23.2	21.7			7.7			7.7	
Actuated g/C Ratio	0.48	0.46		0.51	0.48			0.17			0.17	
Clearance Time (s)	5.0	5.0		5.0	5.0			5.0			5.0	
Vehicle Extension (s)	3.0	3.0		3.0	3.0			3.0			3.0	
Lane Grp Cap (vph)	526	848		467	825			242			225	
v/s Ratio Prot	0.00	c0.22		c0.00	0.18							
v/s Ratio Perm	0.01			0.04				0.03			c0.09	
v/c Ratio	0.01	0.47		0.08	0.38			0.17			0.51	
Uniform Delay, d1	6.1	8.3		5.5	7.4			16.0			17.0	
Progression Factor	1.00	1.00		1.00	1.00			1.00			1.00	
Incremental Delay, d2	0.0	0.4		0.1	0.3			0.3			1.8	
Delay (s)	6.2	8.7		5.6	7.7			16.3			18.8	
Level of Service	A	A		A	A			B			B	
Approach Delay (s)		8.6			7.5			16.3			18.8	
Approach LOS		A			A			B			B	

Intersection Summary			
HCM 2000 Control Delay	10.0	HCM 2000 Level of Service	A
HCM 2000 Volume to Capacity ratio	0.46		
Actuated Cycle Length (s)	45.1	Sum of lost time (s)	15.0
Intersection Capacity Utilization	44.2%	ICU Level of Service	A
Analysis Period (min)	15		

c Critical Lane Group

Intersection	
Int Delay, s/veh	6.5

Movement	EBL	EBT	EBR	WBL	WBT	WBR	NBL	NBT	NBR	SBL	SBT	SBR
Vol, veh/h	4	399	57	58	313	49	56	5	51	86	7	5
Conflicting Peds, #/hr	1	0	7	7	0	1	2	0	2	2	0	2
Sign Control	Free	Free	Free	Free	Free	Free	Stop	Stop	Stop	Stop	Stop	Stop
RT Channelized	-	-	None	-	-	None	-	-	None	-	-	None
Storage Length	50	-	-	50	-	-	-	-	-	-	-	-
Veh in Median Storage, #	-	0	-	-	0	-	-	0	-	-	0	-
Grade, %	-	0	-	-	0	-	-	0	-	-	0	-
Peak Hour Factor	94	94	94	94	94	94	94	94	94	94	94	94
Heavy Vehicles, %	0	3	4	2	1	0	0	0	2	0	0	0
Mvmt Flow	4	424	61	62	333	52	60	5	54	91	7	5

Major/Minor	Major1			Major2			Minor1			Minor2		
Conflicting Flow All	387	0	0	487	0	0	956	976	464	979	980	368
Stage 1	-	-	-	-	-	-	465	465	-	484	484	-
Stage 2	-	-	-	-	-	-	491	511	-	495	496	-
Critical Hdwy	4.1	-	-	4.12	-	-	7.1	6.5	6.22	7.1	6.5	6.2
Critical Hdwy Stg 1	-	-	-	-	-	-	6.1	5.5	-	6.1	5.5	-
Critical Hdwy Stg 2	-	-	-	-	-	-	6.1	5.5	-	6.1	5.5	-
Follow-up Hdwy	2.2	-	-	2.218	-	-	3.5	4	3.318	3.5	4	3.3
Pot Cap-1 Maneuver	1183	-	-	1076	-	-	240	253	598	231	252	682
Stage 1	-	-	-	-	-	-	581	566	-	568	555	-
Stage 2	-	-	-	-	-	-	563	540	-	560	549	-
Platoon blocked, %		-	-		-	-						
Mov Cap-1 Maneuver	1176	-	-	1070	-	-	220	237	594	195	236	677
Mov Cap-2 Maneuver	-	-	-	-	-	-	220	237	-	195	236	-
Stage 1	-	-	-	-	-	-	578	563	-	565	522	-
Stage 2	-	-	-	-	-	-	516	508	-	499	546	-

Approach	EB	WB	NB	SB
HCM Control Delay, s	0.1	1.2	23.7	39.4
HCM LOS			C	E

Minor Lane/Major Mvmt	NBLn1	EBL	EBT	EBR	WBL	WBT	WBR	SBLn1
Capacity (veh/h)	310	1176	-	-	1070	-	-	205
HCM Lane V/C Ratio	0.384	0.004	-	-	0.058	-	-	0.509
HCM Control Delay (s)	23.7	8.1	-	-	8.6	-	-	39.4
HCM Lane LOS	C	A	-	-	A	-	-	E
HCM 95th %tile Q(veh)	1.7	0	-	-	0.2	-	-	2.6

Intersection	
Int Delay, s/veh	3.7

Movement	EBL	EBT	EBR	WBL	WBT	WBR	NBL	NBT	NBR	SBL	SBT	SBR
Vol, veh/h	56	466	15	109	364	95	21	10	108	0	0	39
Conflicting Peds, #/hr	0	0	2	7	0	1	2	0	0	0	0	0
Sign Control	Free	Free	Free	Free	Free	Free	Stop	Stop	Stop	Stop	Stop	Stop
RT Channelized	-	-	None	-	-	None	-	-	None	-	-	None
Storage Length	50	-	-	150	-	-	-	-	0	-	-	0
Veh in Median Storage, #	-	0	-	-	0	-	-	0	-	-	0	-
Grade, %	-	0	-	-	0	-	-	0	-	-	0	-
Peak Hour Factor	95	95	95	95	95	95	95	95	95	95	95	95
Heavy Vehicles, %	0	3	0	2	1	0	0	10	3	3	0	0
Mvmt Flow	59	491	16	115	383	100	22	11	114	0	0	41

Major/Minor	Major1			Major2			Minor1			Minor2		
Conflicting Flow All	485	0	0	508	0	0	1283	1333	507	1289	1291	437
Stage 1	-	-	-	-	-	-	618	618	-	665	665	-
Stage 2	-	-	-	-	-	-	665	715	-	624	626	-
Critical Hdwy	4.1	-	-	4.12	-	-	7.1	6.6	6.23	7.13	6.5	6.2
Critical Hdwy Stg 1	-	-	-	-	-	-	6.1	5.6	-	6.13	5.5	-
Critical Hdwy Stg 2	-	-	-	-	-	-	6.1	5.6	-	6.13	5.5	-
Follow-up Hdwy	2.2	-	-	2.218	-	-	3.5	4.09	3.327	3.527	4	3.3
Pot Cap-1 Maneuver	1088	-	-	1057	-	-	143	148	564	140	165	624
Stage 1	-	-	-	-	-	-	480	468	-	448	461	-
Stage 2	-	-	-	-	-	-	453	423	-	471	480	-
Platoon blocked, %		-	-		-	-						
Mov Cap-1 Maneuver	1086	-	-	1051	-	-	117	124	560	91	138	622
Mov Cap-2 Maneuver	-	-	-	-	-	-	117	124	-	91	138	-
Stage 1	-	-	-	-	-	-	453	442	-	423	410	-
Stage 2	-	-	-	-	-	-	376	376	-	345	453	-

Approach	EB	WB	NB	SB
HCM Control Delay, s	0.9	1.7	20.5	11.2
HCM LOS			C	B

Minor Lane/Major Mvmt	NBLn1	NBLn2	EBL	EBT	EBR	WBL	WBT	WBR	SBLn1
Capacity (veh/h)	119	560	1086	-	-	1051	-	-	622
HCM Lane V/C Ratio	0.274	0.203	0.054	-	-	0.109	-	-	0.066
HCM Control Delay (s)	46.3	13.1	8.5	-	-	8.8	-	-	11.2
HCM Lane LOS	E	B	A	-	-	A	-	-	B
HCM 95th %tile Q(veh)	1	0.8	0.2	-	-	0.4	-	-	0.2

Movement	EBT	EBR	WBL	WBT	NBL	NBR
Lane Configurations						
Volume (vph)	118	455	377	98	474	311
Ideal Flow (vphpl)	1900	1900	1900	1900	1900	1900
Total Lost time (s)	5.5	5.5	5.5	6.0	5.5	5.5
Lane Util. Factor	1.00	1.00	*0.78	1.00	1.00	1.00
Frpb, ped/bikes	1.00	1.00	1.00	1.00	1.00	1.00
Flpb, ped/bikes	1.00	1.00	1.00	1.00	1.00	1.00
Frt	1.00	0.85	1.00	1.00	1.00	0.85
Flt Protected	1.00	1.00	0.95	1.00	0.95	1.00
Satd. Flow (prot)	1881	1583	2761	1900	1787	1599
Flt Permitted	1.00	1.00	0.95	1.00	0.95	1.00
Satd. Flow (perm)	1881	1583	2761	1900	1787	1599
Peak-hour factor, PHF	0.88	0.88	0.88	0.88	0.88	0.88
Adj. Flow (vph)	134	517	428	111	539	353
RTOR Reduction (vph)	0	135	0	0	0	27
Lane Group Flow (vph)	134	382	428	111	539	326
Confl. Peds. (#/hr)						1
Heavy Vehicles (%)	1%	2%	2%	0%	1%	1%
Turn Type	NA	custom	Prot	NA	Prot	custom
Protected Phases	4	4 5 7	3	8	5 6 7	3 5 6 7
Permitted Phases		4				5 6 7
Actuated Green, G (s)	10.6	63.2	23.1	38.7	63.4	92.0
Effective Green, g (s)	10.6	63.2	23.1	38.7	63.4	92.0
Actuated g/C Ratio	0.09	0.56	0.20	0.34	0.56	0.81
Clearance Time (s)	5.5		5.5	6.0		
Vehicle Extension (s)	2.3		2.3	2.3		
Lane Grp Cap (vph)	175	880	561	647	997	1294
v/s Ratio Prot	c0.07	0.24	c0.16	0.06	c0.30	0.20
v/s Ratio Perm						
v/c Ratio	0.77	0.43	0.76	0.17	0.54	0.25
Uniform Delay, d1	50.3	14.7	42.7	26.2	15.9	2.6
Progression Factor	1.00	1.00	1.00	1.00	0.43	0.09
Incremental Delay, d2	16.9	0.2	5.7	0.1	0.7	0.0
Delay (s)	67.1	14.9	48.4	26.3	7.5	0.3
Level of Service	E	B	D	C	A	A
Approach Delay (s)	25.7			43.8	4.7	
Approach LOS	C			D	A	

Intersection Summary			
HCM 2000 Control Delay	21.4	HCM 2000 Level of Service	C
HCM 2000 Volume to Capacity ratio	0.70		
Actuated Cycle Length (s)	113.6	Sum of lost time (s)	27.5
Intersection Capacity Utilization	53.3%	ICU Level of Service	A
Analysis Period (min)	15		
c Critical Lane Group			

HCM Signalized Intersection Capacity Analysis
3: Haggen's Access/Site Access & Blankenship Road

8/25/2015

Movement	EBL	EBT	EBR	WBL	WBT	WBR	NBL	NBT	NBR	SBL	SBT	SBR
Lane Configurations												
Volume (vph)	4	399	57	58	313	49	56	5	51	86	7	5
Ideal Flow (vphpl)	1900	1900	1900	1900	1900	1900	1900	1900	1900	1900	1900	1900
Total Lost time (s)	5.0	5.0		5.0	5.0			5.0			5.0	
Lane Util. Factor	1.00	1.00		1.00	1.00			1.00			1.00	
Frpb, ped/bikes	1.00	1.00		1.00	1.00			0.99			1.00	
Flpb, ped/bikes	1.00	1.00		1.00	1.00			1.00			1.00	
Frt	1.00	0.98		1.00	0.98			0.94			0.99	
Flt Protected	0.95	1.00		0.95	1.00			0.98			0.96	
Satd. Flow (prot)	1804	1801		1767	1840			1704			1802	
Flt Permitted	0.53	1.00		0.38	1.00			0.82			0.78	
Satd. Flow (perm)	1014	1801		702	1840			1441			1466	
Peak-hour factor, PHF	0.94	0.94	0.94	0.94	0.94	0.94	0.94	0.94	0.94	0.94	0.94	0.94
Adj. Flow (vph)	4	424	61	62	333	52	60	5	54	91	7	5
RTOR Reduction (vph)	0	6	0	0	6	0	0	32	0	0	2	0
Lane Group Flow (vph)	4	479	0	62	379	0	0	87	0	0	101	0
Confl. Peds. (#/hr)	1		7	7		1	2		2	2		2
Heavy Vehicles (%)	0%	3%	4%	2%	1%	0%	0%	0%	2%	0%	0%	0%
Turn Type	pm+pt	NA		pm+pt	NA		Perm	NA		Perm	NA	
Protected Phases	1	6		5	2			4			8	
Permitted Phases	6			2			4			8		
Actuated Green, G (s)	26.4	25.7		30.0	27.5			7.9			7.9	
Effective Green, g (s)	26.4	25.7		30.0	27.5			7.9			7.9	
Actuated g/C Ratio	0.52	0.50		0.59	0.54			0.15			0.15	
Clearance Time (s)	5.0	5.0		5.0	5.0			5.0			5.0	
Vehicle Extension (s)	3.0	3.0		3.0	3.0			3.0			3.0	
Lane Grp Cap (vph)	534	905		464	990			222			226	
v/s Ratio Prot	0.00	c0.27		c0.01	0.21							
v/s Ratio Perm	0.00			0.07				0.06			c0.07	
v/c Ratio	0.01	0.53		0.13	0.38			0.39			0.45	
Uniform Delay, d1	6.0	8.6		4.9	6.9			19.4			19.6	
Progression Factor	1.00	1.00		1.00	1.00			1.00			1.00	
Incremental Delay, d2	0.0	0.6		0.1	0.2			1.1			1.4	
Delay (s)	6.0	9.2		5.0	7.1			20.6			21.0	
Level of Service	A	A		A	A			C			C	
Approach Delay (s)		9.1			6.8			20.6			21.0	
Approach LOS		A			A			C			C	

Intersection Summary			
HCM 2000 Control Delay	10.5	HCM 2000 Level of Service	B
HCM 2000 Volume to Capacity ratio	0.48		
Actuated Cycle Length (s)	51.1	Sum of lost time (s)	15.0
Intersection Capacity Utilization	49.6%	ICU Level of Service	A
Analysis Period (min)	15		
c Critical Lane Group			

Intersection: 3: Haggen's Access/Site Access & Blankenship Road

Movement	EB	EB	WB	WB	NB	SB
Directions Served	L	TR	L	TR	LTR	LTR
Maximum Queue (ft)	39	161	60	168	72	105
Average Queue (ft)	4	65	16	56	35	46
95th Queue (ft)	22	125	47	125	63	79
Link Distance (ft)		320		285	307	450
Upstream Blk Time (%)						
Queuing Penalty (veh)						
Storage Bay Dist (ft)	50		50			
Storage Blk Time (%)	0	8	0	5		
Queuing Penalty (veh)	0	1	0	2		

Intersection: 5: 10th Street & Blankenship Road/Salamo Drive

Movement	EB	EB	WB	WB	WB	NB	NB
Directions Served	T	R	L	L	T	L	R
Maximum Queue (ft)	189	197	224	245	197	131	72
Average Queue (ft)	48	94	146	151	36	54	3
95th Queue (ft)	123	168	225	237	110	109	39
Link Distance (ft)	248				1310		165
Upstream Blk Time (%)	0					0	0
Queuing Penalty (veh)	0					0	1
Storage Bay Dist (ft)		100	200	200		100	
Storage Blk Time (%)	1	6	2	2	0	3	
Queuing Penalty (veh)	3	3	1	1	0	7	

Zone Summary

Zone wide Queuing Penalty: 19

Intersection: 3: Haggen's Access/Site Access & Blankenship Road

Movement	EB	EB	WB	WB	NB	SB
Directions Served	L	TR	L	TR	LTR	LTR
Maximum Queue (ft)	39	216	74	162	107	128
Average Queue (ft)	2	96	28	68	50	49
95th Queue (ft)	15	177	62	132	87	93
Link Distance (ft)		270		280	307	450
Upstream Blk Time (%)		0				
Queuing Penalty (veh)		0				
Storage Bay Dist (ft)	50		50			
Storage Blk Time (%)	0	14	1	8		
Queuing Penalty (veh)	0	1	4	5		

Intersection: 5: 10th Street & Blankenship Road/Salamo Drive

Movement	EB	EB	WB	WB	WB	NB	NB
Directions Served	T	R	L	L	T	L	R
Maximum Queue (ft)	233	198	222	243	339	148	177
Average Queue (ft)	97	98	133	126	68	81	23
95th Queue (ft)	183	177	202	209	183	141	112
Link Distance (ft)	251				1319		164
Upstream Blk Time (%)	0					0	0
Queuing Penalty (veh)	2					0	4
Storage Bay Dist (ft)		100	200	200		100	
Storage Blk Time (%)	18	5	1	1	1	7	0
Queuing Penalty (veh)	84	7	1	1	2	23	1

Zone Summary

Zone wide Queuing Penalty: 136

Shroyer, Shauna

From: Pelz, Zach
Sent: Tuesday, August 25, 2015 12:21 PM
To: Shroyer, Shauna
Subject: FW: Response to August 17, 2015 Email from Ed Schwarz to Planning Commission Chairman Ryerson Schwark; City of West Linn Planning File Nos. DR-15-11 and LLA-15-01
Attachments: 2015.08.25 Lt R. Schwark re response to Schwarz email.PDF

For the record.

Zach Pelz, Associate Planner
Planning and Building, #1542

West Linn

Please consider the impact on the environment before printing a paper copy of this email.
This e-mail is subject to the State Retention Schedule and may be made available to the public.

From: Rapp, Reagan S. (Perkins Coie) [mailto:RRapp@perkinscoie.com] **On Behalf Of** Robinson, Michael C. (Perkins Coie)
Sent: Tuesday, August 25, 2015 9:52 AM
To: Boyd, John
Cc: Kerr, Chris; Pelz, Zach; Thornton, Megan; rmorgan@conam.com; mmahoney@conam.com; jeff@parkerdev.com; King, Seth J. (Perkins Coie); Stephenson, Garrett H. (Perkins Coie); Robinson, Michael C. (Perkins Coie)
Subject: Response to August 17, 2015 Email from Ed Schwarz to Planning Commission Chairman Ryerson Schwark; City of West Linn Planning File Nos. DR-15-11 and LLA-15-01

Dear Mr. Boyd,

This office represents the applicant in the above-referenced files. Please place this letter before Chair Schwark, place it in the official Planning Department file for this application, and post this letter to the City's website so the public may review it.

Michael C. Robinson | Perkins Coie LLP
PARTNER
1120 N.W. Couch Street Tenth Floor
Portland, OR 97209-4128
D. +1.503.727.2264
C. +1.503.407.2578
F. +1.503.346.2264
E. MRobinson@perkinscoie.com

PERKINSCOIE

1120 NW Couch Street
10th Floor
Portland, OR 97209-4128

+1.503.727.2000
+1.503.727.2222
perkinscoie.com

August 25, 2015

Michael C. Robinson
MRobinson@perkinscoie.com
D. +1.503.727.2264
F. +1.503.346.2264

VIA EMAIL

Mr. Ryerson Schwark, Chair
City of West Linn Planning Commission
22500 Salamo Road
West Linn, OR 97068

Re: City of West Linn Planning File Numbers DR-15-11 and LLA-15-01

Dear Chair Schwark and Members of the Planning Commission:

This office represents Con Am Properties, LLC, the Applicant in the above-referenced City of West Linn file. I am writing to respond to Mr. Schwarz's email to you dated August 17, 2015 (**Exhibit 1**). I have asked the Planning Department to place this letter in the official Planning Department file and to post it on the City's website so the public may be aware of it and review it.

Mr. Schwarz asks that "adequate time" be allocated to his unnamed group to allow it to present its findings and asks for 20 minutes to do so. My understanding is that the Planning Commission normally allows the Applicant 20 minutes to present its application and then 10 minutes to present its rebuttal. I further understand the Planning Commission's practices is to normally provide three (3) minutes for members of the public to testify.

I urge the Planning Commission not to grant Mr. Schwarz's request for several reasons. First, as the Planning Commission knows, the Applicant bears the burden of proof. Twenty minutes to make an initial presentation on this application and 10 minutes to rebut opposition testimony is barely enough time for the Applicant to make its case. However, as long as these are the times that the Planning Commission normally provides, the Applicant does not request additional time.

Second, the Applicant respectfully requests that the Planning Commission treat all opposing parties the same. An attorney does not deserve more time than anyone else. Moreover, the attorney has an opportunity to submit written testimony, just like every other party to the hearing, and if the time to present oral testimony proves insufficient, written testimony may be submitted.

Third, the Oregon Land Use Board of Appeals ("LUBA") has held that a hearings body may limit testimony presentation time and not prejudice a party's substantial rights as long as adequate opportunity for written testimony is allowed. *Wild Rose Ranch Enterprises v. Benton County*, 37 Or LUBA 368 (1999). In this case, there are twenty seven days between the notice of

the August 26 hearing and the September 2 hearing, which is more than an adequate opportunity to submit written testimony. Further, CDC 99.170.A.5 allows the Planning Commission to set reasonable time limits for oral testimony.

Fourth, giving an opposition attorney more time simply weights the total time more in favor of opponents. If thirty (30) opponents testify, that is ninety (90) minutes of opposition testimony versus the applicant's thirty (30) minutes.

Finally, the opponents will ask to "share" their time with other opponents. The Applicant urges the Planning Commission to reject this practice because it is not provided for in the applicable rules for the conduct of quasi-judicial hearings and because it gives more time to one person than allowed by the Planning Commission's normal practice.

The Applicant respectfully requests that the Planning Commission adhere to its practice for public testimony times in a quasi-judicial hearing.

Very truly yours,

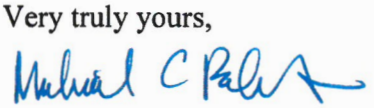

Michael C. Robinson

MCR:rsp
Enclosure

cc: Mr. Zach Pelz (via email) (w/ encl.)
Mr. Chris Kerr (via email) (w/ encl.)
Mr. John Boyd (via email) (w/ encl.)
Mr. Jeff Parker (via email) (w/ encl.)
Ms. Megan Thornton (via email) (w/ encl.)
Mr. Mike Mahoney (via email) (w/ encl.)
Mr. Rob Morgan (via email) (w/ encl.)
Mr. Garrett Stephenson (via email) (w/ encl.)
Mr. Seth King (via email) (w/ encl.)

From: Ed Schwarz [mailto:ed.schwarz@gmail.com]
Sent: Monday, August 17, 2015 10:05 AM
To: Planning Commission Board
Cc: Pelz, Zach; Schwark, Ryerson
Subject: Regarding Design Review Application DR-15-11

Chair Schwark,

On August 26, 2015 the Planning Commission is scheduled to hear DR-15-11, an application for 180 apartment units and commercial office space at the corner of Blankenship Road and Tannler Drive.

I represent a group of concerned citizens who have retained an attorney and traffic engineer to independently review this application and its effects on our neighborhood.

We request adequate time be allotted by the Planning Commission to allow us to present our findings. We request twenty minutes for our presentation.

Please reply and let me know if the Planning Commission will allot this time to us.

Thank you.

Regards,

Ed Schwarz
2206 Tannler Drive
West Linn

EXHIBIT 1

Shroyer, Shauna

From: Robinson, Michael C. (Perkins Coie) <MRobinson@perkinscoie.com>
Sent: Tuesday, August 25, 2015 7:19 AM
To: Schwarz, Ed
Cc: Roberta Schwarz (roberta.schwarz@comcast.net); Pelz, Zach; Boyd, John; Kerr, Chris; Thornton, Megan; Rob Morgan (rmorgan@conam.com); 'Mike Mahoney (mmahoney@conam.com)'; Mr. Jeff Parker; Robinson, Michael C. (Perkins Coie)
Subject: RE: Traffic Update for DR-15-11

My pleasure, Ed,

Michael C. Robinson | Perkins Coie LLP
PARTNER
1120 N.W. Couch Street Tenth Floor
Portland, OR 97209-4128
D. +1.503.727.2264
C. +1.503.407.2578
F. +1.503.346.2264
E. MRobinson@perkinscoie.com

From: Ed Schwarz [mailto:ed.schwarz@gmail.com]
Sent: Tuesday, August 25, 2015 7:18 AM
To: Robinson, Michael C. (Perkins Coie)
Subject: Re: Traffic Update for DR-15-11

Mike,

Thanks for the clarification.

Ed

On Tue, Aug 25, 2015 at 6:50 AM, Robinson, Michael C. (Perkins Coie) <MRobinson@perkinscoie.com> wrote:
You were given the wrong information. I told the BHT meeting two things regarding traffic mitigation. I said the City had received a letter from ODOT approving the proposed mitigation at Salamo/Tenth/Blankenship. I also said that I was told that the City's traffic consultant wanted a signal at the site's Blankenship driveway and that my client had agreed to install a signal. I said this was all oral and that I had no letter from the City but hoped to see one soon.

Michael C. Robinson | Perkins Coie LLP
1120 N.W. Couch Street, Tenth Floor
Portland, OR 97209-4128
Phone: 503.727.2264
Mobile: 503.407.2578

Fax: 503.346.2264
Email: MRobinson@PerkinsCoie.com

Sent from my IPhone

On Aug 24, 2015, at 9:34 PM, Savanna Oaks Neighborhood Association <SavannaOaksNA@westlinnoregon.gov> wrote:

Mike,

My wife attended your presentation at the Barrington Heights Neighborhood Association this evening. She and those in attendance were told by you that at 4:30 pm this afternoon you received an update on the traffic for the ConAm proposal (DR-15-11) which stated that there would be a signal put in at the exit from the development at Haggen 's driveway.

I have looked on the city web site and do not see this additional information. Please forward a copy to me immediately.

Regards,
Ed Schwarz, President
Savanna Oaks Neighborhood Associationr

Savanna Oaks
SavannaOaksNA@westlinnoregon.gov
http://westlinnoregon.gov/savannaoaks
Phone(503) 657-0331

NOTICE: This communication may contain privileged or other confidential information. If you have received it in error, please advise the sender by reply email and immediately delete the message and any attachments without copying or disclosing the contents. Thank you.

Shroyer, Shauna

From:	Rapp, Reagan S. (Perkins Coie) <RRapp@perkinscoie.com> on behalf of Robinson, Michael C. (Perkins Coie) <MRobinson@perkinscoie.com>
Sent:	Monday, August 24, 2015 3:33 PM
To:	Boyd, John
Cc:	Kerr, Chris; Pelz, Zach; Thornton, Megan; rmorgan@conam.com; mmahoney@conam.com; jeff@parkerdev.com; King, Seth J. (Perkins Coie); Stephenson, Garrett H. (Perkins Coie); Robinson, Michael C. (Perkins Coie)
Subject:	West Linn File Nos. DR-15-11 and LLA-15-01
Attachments:	24082015[Filename].pdf

Dear Mr. Boyd,

This office represents ConAm Properties, LLC. I attach a copy of the West Linn Planning Commission September 2, 2015 Planning Commission agenda. I note that the agenda provides that the initial evidentiary hearing for the ConAm application is on August 26 and that the application will be continued to the date certain of September 2, 2015. Pursuant to ORS 197.763(d), an extension of a hearing granted pursuant to ORS 197.763(6) shall be subject to the limitations of ORS 227.178(1) (requiring that the governing body of the city take final action on an application for a limited land use decision within 120 days after the application is deemed complete) "unless the continuation or extension is requested or agreed to by the applicant." The Applicant has not requested the continuance nor does it agree to the continuance. Therefore, the seven (7) days between August 26 and September 2 are not excluded from the 120-day clock.

The City deemed this application complete on July 20, 2015. The 120-day period in ORS 227.178(1) ends on November 17, 2015.

Please place this email in the official Planning Department file for these applications.

Reagan Rapp | Perkins Coie LLP
LEGAL SECRETARY TO
Michael C. Robinson | Seth J. King
Brendan S. Crowley | Garrett H. Stephenson
1120 N.W. Couch Street Tenth Floor
Portland, OR 97209-4128
D. +1.503.727.2137
F. +1.503.727.2222
E. RRapp@perkinscoie.com

CITY OF
West Linn

22500 Salamo Road
West Linn, Oregon 97068
http://westlinnoregon.gov

PLANNING COMMISSION MEETING

Wednesday, September 2, 2015

6:00 p.m. – Work Session - Rosemont Room
6:30 p.m. - Meeting - Council Chambers

---

1. Call to order
2. Public comment related to land use items not on the agenda
3. Public Hearing: 22-Lot Subdivision at 22850 and 22848 Weatherhill Road, SUB-15-01 *(Staff: Peter Spir)*
   NOTE: - this hearing will be opened and immediately continued to the September 9, 2015 meeting. There will be no testimony on this agenda item.
4. Public Hearing – ***Continued from August 26, 2015:*** Class II Design Review and Property Line Adjustment permits to construct 180 multi-family dwelling units and 1,973 square feet of commercial space at the northwest corner of the intersection of Tannler Drive and Blankenship Road, DR-15-11/LLA-15-01 *(Staff: Zach Pelz)*
5. Items of interest from the Planning Commission
6. Items of interest from staff
7. Adjourn

Attachments
Staff Report, SUB-15-01

Tentative agenda for upcoming Planning Commission meetings:
Sept. 9 – Con't., SUB-15-01
Con't., PLN-15-01

Meeting Notes:

Please help us to accommodate citizens who are chemically sensitive to fragrances and other scented products. Thank you for not wearing perfume, aftershave, scented hand lotion, fragranced hair products, and/or similar products.

The Council Chambers is equipped with an induction loop and a limited number of neck loops for the hearing impaired. Please let the City know if you require any special assistance under the Americans with Disabilities Act, please call City Hall 48 hours prior to the meeting date, 503-657-0331.

Shroyer, Shauna

From:	Robinson, Michael C. (Perkins Coie) <MRobinson@perkinscoie.com>
Sent:	Monday, August 24, 2015 12:40 PM
To:	Thornton, Megan; Kerr, Chris; Pelz, Zach; Boyd, John; Le, Khoi; Calvert, Lance
Cc:	Brent Ahrend; Janet T. Jones (JTJones@mcknze.com); Rob Morgan; 'Mike Mahoney (mmahoney@conam.com)'; Jeff Parker
Subject:	ConAm; ODOT Comments
Attachments:	Tannler Mixed Use ODOT Response Letter_08242015.pdf

Please see attached.

Michael C. Robinson | **Perkins Coie LLP**
PARTNER
1120 N.W. Couch Street Tenth Floor
Portland, OR 97209-4128
D. +1.503.727.2264
C. +1.503.407.2578
F. +1.503.346.2264
E. MRobinson@perkinscoie.com

Selected as 2014 "Law Firm of the Year"
in Litigation - Land Use & Zoning by
U.S. News – Best Lawyers® "Best Law Firms"

Oregon
Kate Brown, Governor

Department of Transportation
Region 1 Headquarters
123 NW Flanders Street
Portland, Oregon 97209
(503) 731.8200
FAX (503) 731.8259

August 24, 2015 ODOT #6640

ODOT Response

Project Name: Tannler Development	**Applicant:** Rob Morgan, ConAM
Jurisdiction: City of West Linn	**Jurisdiction Case #:** PA-15-23
Site Address: 2442, 2422, 2410 Tannler Drive, West Linn, OR	**Legal Description:** 21E35C **Tax Lot(s):** 00100, 00102, 00200
State Highway: I-205/10th Street Interchange	**Mileposts:** N/A

The subject site is in the vicinity of I-205/10th Street Interchange, which includes the Blankenship/10th Street/Salamo Road intersection. ODOT has permitting authority for this facility and an interest in ensuring that this proposed land use is compatible with its safe and efficient operation.

ODOT has completed the review of the Revised Mitigation Measures addendum, dated August 21, 2015, to the original Traffic Impact Analysis (TIA), dated July 20th. The proposed mitigation includes construction of a "second left-turn lane on the Salamo Road approach to 10th Street by widening the roadway and intersection and installing necessary traffic signal equipment" with no changes to the signal timing or phasing. ODOT finds that this mitigation is acceptable to meet ODOT volume to capacity ratio requirements. Please note that the proposed construction must be consistent with all ODOT standards and requirements.

ODOT concurs with conditioning approval for proportionate share towards the cost of improvements at the 10th Street/8th Avenue/8th Court intersection as identified in the City of West Linn's Transportation System Plan.

Please send a copy of the Notice of Decision including conditions of approval to:

ODOT Region 1 Planning
Development Review
123 NW Flanders St
Portland, OR 97209
Region1_DEVREV_Applications@odot.state.or.us

Development Review Planner: Joshua Brooking	503.731.3049, joshua.c.brooking@odot.state.or.us
Traffic Contact: Avi Tayar, P.E.	503.731.8221

Shroyer, Shauna

From:	Rapp, Reagan S. (Perkins Coie) <RRapp@perkinscoie.com> on behalf of Robinson, Michael C. (Perkins Coie) <MRobinson@perkinscoie.com>
Sent:	Friday, August 21, 2015 1:37 PM
To:	Thornton, Megan; Boyd, John; Pelz, Zach; Kerr, Chris
Cc:	Robinson, Michael C. (Perkins Coie)
Subject:	ConAm Application; Traffic Analysis Letter
Attachments:	LTR-City of West Linn-Revised Mitigation Measures-150821.pdf

For your review.

Michael C. Robinson | **Perkins Coie LLP**
PARTNER
1120 N.W. Couch Street Tenth Floor
Portland, OR 97209-4128
D. +1.503.727.2264
C. +1.503.407.2578
F. +1.503.346.2264
E. MRobinson@perkinscoie.com

Selected as 2014 "Law Firm of the Year"
in Litigation - Land Use & Zoning by
U.S. News – Best Lawyers® "Best Law Firms"

MACKENZIE.

DESIGN DRIVEN I CLIENT FOCUSED

August 21, 2015

City of West Linn
Attention: Lance Calvert
22500 Salamo Road
West Linn, OR 97068

Re: **Tannler Mixed-Use Project**
Revised Mitigation Measures
Project Number 2130529.08

Dear Mr. Calvert:

Mackenzie is providing this letter to present our revised mitigation measures and updated analysis for the Tannler Mixed Use project. This letter supplements our July 20, 2015, Updated Transportation Impact Analysis (TIA) report, and reflects comments and discussions provided by the City, ODOT, and the City's traffic consultant, DKS, regarding the TIA and its suggested mitigation measures. **For consistency, we have continued to assume the higher trip generation estimates from the TIA based on 210 apartments units, although the number of units has since been reduced to 180, which reduces the trip generation by 15 AM peak hour and 16 PM peak hour trips.**

With these revised mitigation measures, all study area intersections can meet the City's requirements to operate at level of service "D" or to mitigate project impacts where an intersection is already not meeting the standards. For unsignalized intersection operation, the critical stop controlled lane results are reported, consistent with the City's standard practice and Transportation System Plan. Further, the intersection of Blankenship Road/Salamo Road/10th Street will meet ODOT's standard of a volume to capacity ratio (v/c) of 0.85 or lower with the recommended mitigation.

In summary, the recommendations include:

1. Install a median on the Tannler Drive approach to Blankenship Road to limit southbound traffic to right turns only. No restrictions are proposed for the Haggen Shopping Center driveway, and left turns from Blankenship Road eastbound to Tannler Drive would still be allowed. A sketch of the proposed mitigation at this intersection is presented in Figure 3.

2. Provide a second left-turn lane on the Salamo Road approach to 10th Street by widening the roadway and intersection and installing necessary traffic signal equipment. No changes are proposed to the signal timing or phasing. The two left-turn lanes should provide 250 feet of storage. A sketch of the proposed mitigation at this intersection is presented in Figure 4.

3. Pay a proportionate share, in the amount of $24,010, towards the cost of improvements at the 10th Street/8th Avenue/8th Court intersection and the 8th Court extension. (No change from TIA.)

4. Enhance the pedestrian crossing on Blankenship Road west of the shared driveway to include striping, signing, and illumination as needed.

The revised recommendations outlined in items 1 and 2 above are addressed below. Recommendations 3 and 4 are unchanged from the TIA.

Tannler/Blankenship

The TIA initially recommended striping the Tannler Drive approach to Blankenship Road to provide separate lanes for left and through/right movements. City staff and their traffic engineering consultant indicated this proposed mitigation was not acceptable, stating drivers are already using the existing width on the approach as if separate lanes were provided. Upon further review, we noted vehicles turning left or traveling across Blankenship Road will use the center of the Tannler Drive approach, allowing right turning vehicles to pass on the right without waiting behind these other vehicles. A photo demonstrating this lane utilization is presented in Figure 5.

We have updated the pre- and post-development intersection capacity analysis for this intersection based on the current separate lane use of Tannler Drive with the results reflected in Table 1 below. As suggested by the City, this change more accurately reflects the current operation, and shows the through/left turns experience a level of service "F" in the PM peak hour regardless of the project.

A number of mitigation options were considered to address project impacts on the Tannler Drive intersection. A traffic signal would not be allowed due to the proximity to the 10th Street signal, and a full median on Blankenship Road would push significant traffic volumes to the west driveway approaches for the Haggen Shopping Center and shared driveway for the existing offices and the project.

It was determined a partial turn restriction to eliminate through and left-turn movements from the Tannler Drive approach would allow the intersection to operate at a level of service "E," which is better than pre-development conditions, while allowing full movements to continue at the Haggen Center east driveway. This turn restriction would be accomplished by installation of a "pork chop" type median on the approach, along with supplemental signing and striping. A reroute of existing and project traffic would be expected. Through trips from Tannler Drive to the Haggen Center would instead turn right to Blankenship, and then left at the west Haggen Center driveway. Existing traffic from the neighborhood that turns left onto Blankenship would reroute to Salamo Road via Greene Street, Bland Circle, or Remington Drive. Trips from the project would either reroute to the shared driveway on Blankenship Road (most likely given the significantly shorter distance) or to Salamo via Greene Street. Figures 1A and 2A present the anticipated reroute of existing and project traffic.

The resulting reroute includes a total of 119 AM peak hour trips and 61 PM peak hour trips. Greene Street is classified as a Neighborhood Route, and Bland Circle is classified as a collector road (Figure 8-1 of the TSP), both of which are appropriate classifications for traffic traveling between the neighborhood and an arterial roadway such as Salamo Road. These trips will also be added to Salamo Road approach at 10th Street, which are addressed with the mitigation measure proposed below.

Figures 2A and 2B present the AM and PM peak hour post-development volumes with the reroutes from the proposed mitigation at Tannler Drive. For purposes of tracking the reroute volume for this analysis, we have shown all trips traveling on Greene Street; however, some trips would use Bland Circle or Remington Drive instead.

Salamo/Blankenship/10th Street

The TIA recommended striping and signal changes on the Salamo Road approach to 10th Street in order to provide a shared left/through lane. While this recommendation was consistent with conditions of approval for a prior development application on the site, ODOT staff have indicated they would not allow any changes to the traffic signal timing and phasing at this intersection due to the close coordination with the southbound I-205 ramps. Instead, ODOT suggested the addition of a second left-turn lane, which would still provide a separate through lane.

The addition of a second left-turn lane would require widening of Salamo Road, widening in the intersection to provide two receiving lanes on 10th Street, and traffic signal modifications necessary for the widening.

Capacity and queuing calculations have been prepared with this mitigation on Salamo Road. We have included a lane utilization factor for the westbound left-turn lane based on a 47/53 split during the AM peak hour and a 36/64 split during the PM peak hour, determined from specialized counts at this intersection from the July 20 TIA. These lane splits resulted in a lane utilization factor of 0.94 in the AM peak hour and 0.78 in the PM peak hour, and reflect the higher demand for traffic traveling to the I-205 southbound on-ramp. Results are presented in the table below, and show even with the rerouted traffic, the intersection will meet ODOT standards and will operate better than pre-development conditions.

Queuing calculations also show improvements, especially on the Salamo Road approach, where the westbound through queue decreases from 725 to 225 during the AM peak hour. Table 2 presents a comparison of the queuing changes for the lanes with changes in volume. For all other lanes, the volume and signal timing did not change from post-development conditions presented in the TIA.

TABLE 1 – INTERSECTION OPERATION SUMMARY

Intersection	Peak Hour	2017		
		Pre-Development	Post-Development	Post-Development with Proposed Mitigation
Blankenship Road/Site Access/Haggen's Access	AM	0.149-C-15.3	0.209-C-19.7	0.301-C-22.1
	PM	0.154-C-23.1	0.340-D-30.0	0.427-D-34.7
Blankenship Road/Tannler Drive	AM	0.420-D-29.2	**0.700-F-52.0**	0.019-C-21.0
	PM	**0.454-F-56.5**	**0.863-F-132.4**	0.267-E-45.0
Blankenship Road/Salamo Road/10th Street	AM	**0.85-D-36.7**	**0.89-C-33.3**	0.69-B-19.3
	PM	0.68-C-25.1	0.77-C-25.9	0.70-C-21.9

Note: Capacity results are reported as v/c-LOS-Delay
Results in **BOLD** font exceed capacity standards.
City standard – LOS D, or no worse than pre-development conditions
ODOT standard – v/c of 0.85

As noted in the table above, all intersections will operate at City and ODOT standards with the addition of project trips and the proposed mitigation measures. While the Tannler/Blankenship intersection would operate at a level of service "E," it is better than the pre-development condition for the intersection. We would also note this LOS "E" is for left turns

from the Haggen Center east driveway, and these drivers also have the option of turning left from the west driveway at the center, which is expected to have less delay.

TABLE 2 – AM AND PM PEAK HOUR 95TH PERCENTILE QUEUES (FEET)					
Intersection	Movement	Available Storage	2017		
			Pre-Development	Post-Development	Post-Development with Mitigation
10th Street/Blankenship Road/Salamo Road	EB Th	240	100/150	125/175	125/150
	EB Rt	190	150/125	**200**/150	150/150
	WB Lt	180	**300/275**	**275/275**	**250/200**
	WB Th	500+	500/325	725/475	225/100

Results are presented for AM/PM queues
BOLD font indicates available storage is exceeded

As noted in the queuing table above, the proposed mitigation will significantly reduce the queues from pre-development conditions. We recommend the two left-turn lanes provide 250 feet of storage, which is an increase from the existing 180 feet.

SUMMARY

Based on this addendum to the July 20, 2015, TIA, and revised recommended mitigation measures, traffic impacts of site development will be addressed in accordance with City of West Linn and ODOT standards. The analysis is based on the higher number of residential units originally proposed, so the actual intersection operations will be slightly better than presented here.

In summary, the revised recommendations include:

1. Install a median on the Tannler Drive approach to Blankenship Road to limit southbound traffic to right turns only. No restrictions are proposed for the Haggen Shopping Center driveway, and left turns from Blankenship Road eastbound to Tannler Drive would still be allowed. See Figure 3.

2. Provide a second left-turn lane on the Salamo Road approach to 10th Street by widening the roadway and intersection and installing necessary traffic signal equipment. No changes are proposed to the signal timing or phasing. The two left-turn lanes should provide 250 feet of storage. See Figure 4.

3. Pay a proportionate share, in the amount of $24,010, towards the cost of improvements at the 10th Street/8th Avenue/8th Court intersection and the 8th Court extension. (No change from TIA.)

4. Enhance the pedestrian crossing on Blankenship Road west of the shared driveway to include striping, signing, and illumination as needed. (No change from TIA.)

Please contact us if you have any questions.

Sincerely,

Brent Ahrend, PE
Senior Associate | Traffic Engineer

Enclosure(s): Figures
Capacity Calculations
Queuing Calculations

c: Khoi Le, Zach Pelz – West Linn
Avi Tayar, Joshua Brooking – ODOT
Michael Robinson – Perkins Coie
Jeff Parker – Parker Development
Rob Morgan - Conam
Janet Jones - Mackenzie

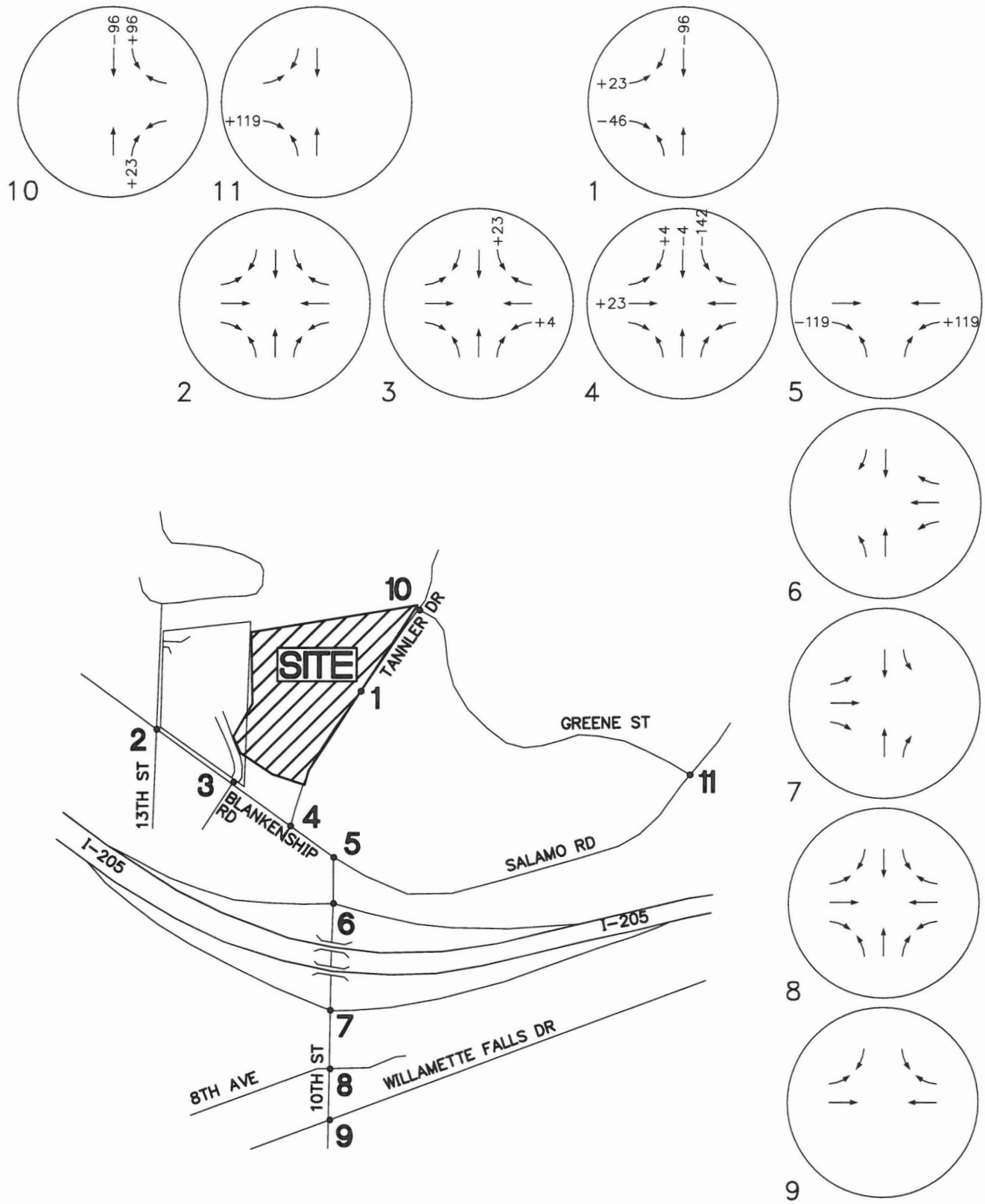

Portland 503.224.9560 Vancouver 360.695.7879 Seattle 206.749.9993
www.mcknze.com
Architecture • Interiors
Planning • Engineering
MACKENZIE.

DATE: 08.19.15
DRAWN BY: JTJ
CHECKED BY: BTA
JOB NO: 2130529.08

2017 POST-DEVELOPMENT VOLUMES - AM PEAK HOUR MITIGATION REROUTE VOLUMES

TANNLER DRIVE MIXED-USE PROJECT
WEST LINN, OREGON

FIGURE
1A

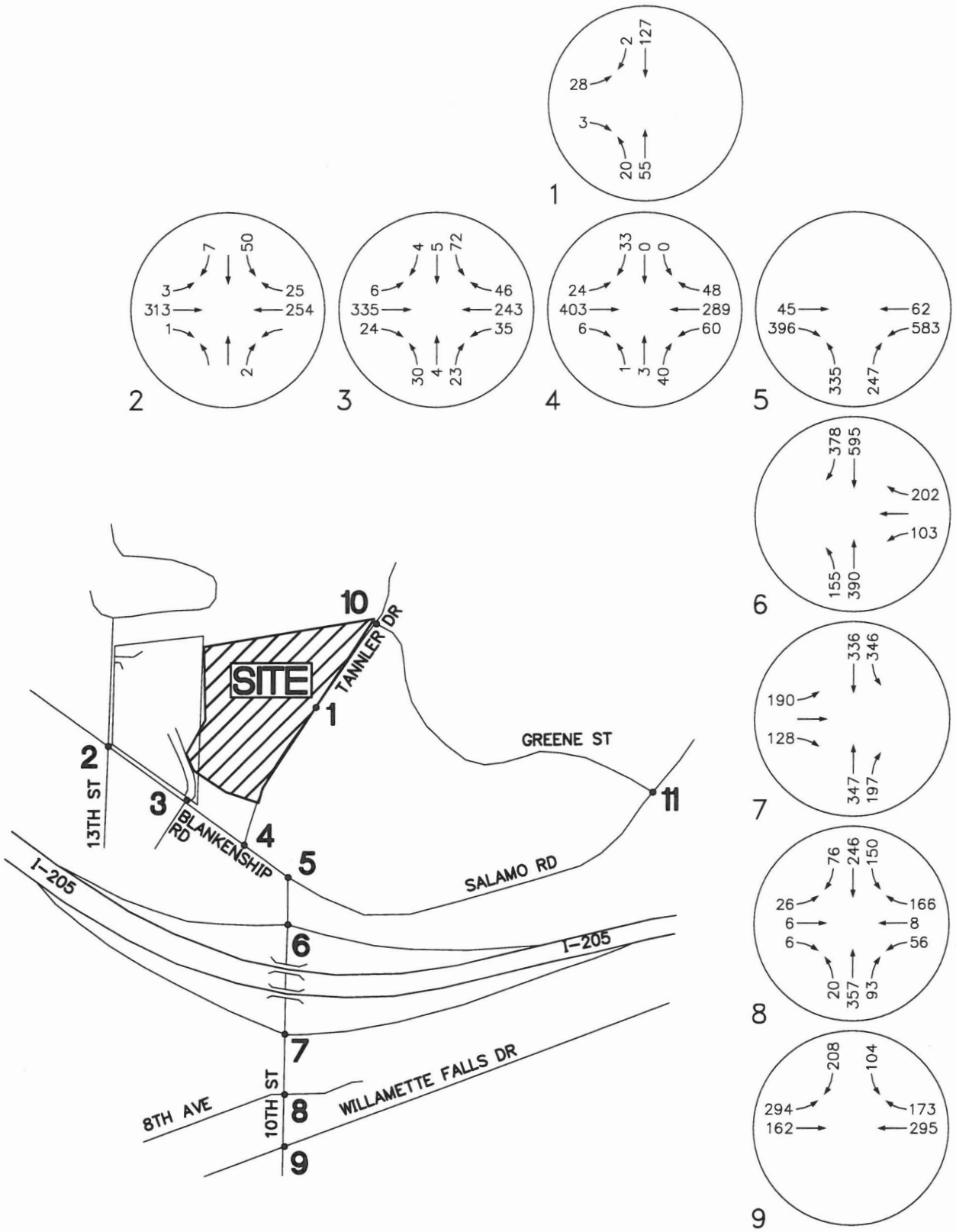

Portland 503.224.9560 Vancouver 360.695.7879 Seattle 206.749.9993
www.mcknze.com
Architecture ▪ Interiors
Planning ▪ Engineering
MACKENZIE.

DATE: 08.19.15
DRAWN BY: JTJ
CHECKED BY: BTA
JOB NO: 2130529.08

2017 POST-DEVELOPMENT VOLUMES - AM PEAK HOUR MITIGATION TOTAL VOLUMES

TANNLER DRIVE MIXED-USE PROJECT
WEST LINN, OREGON

FIGURE
2A

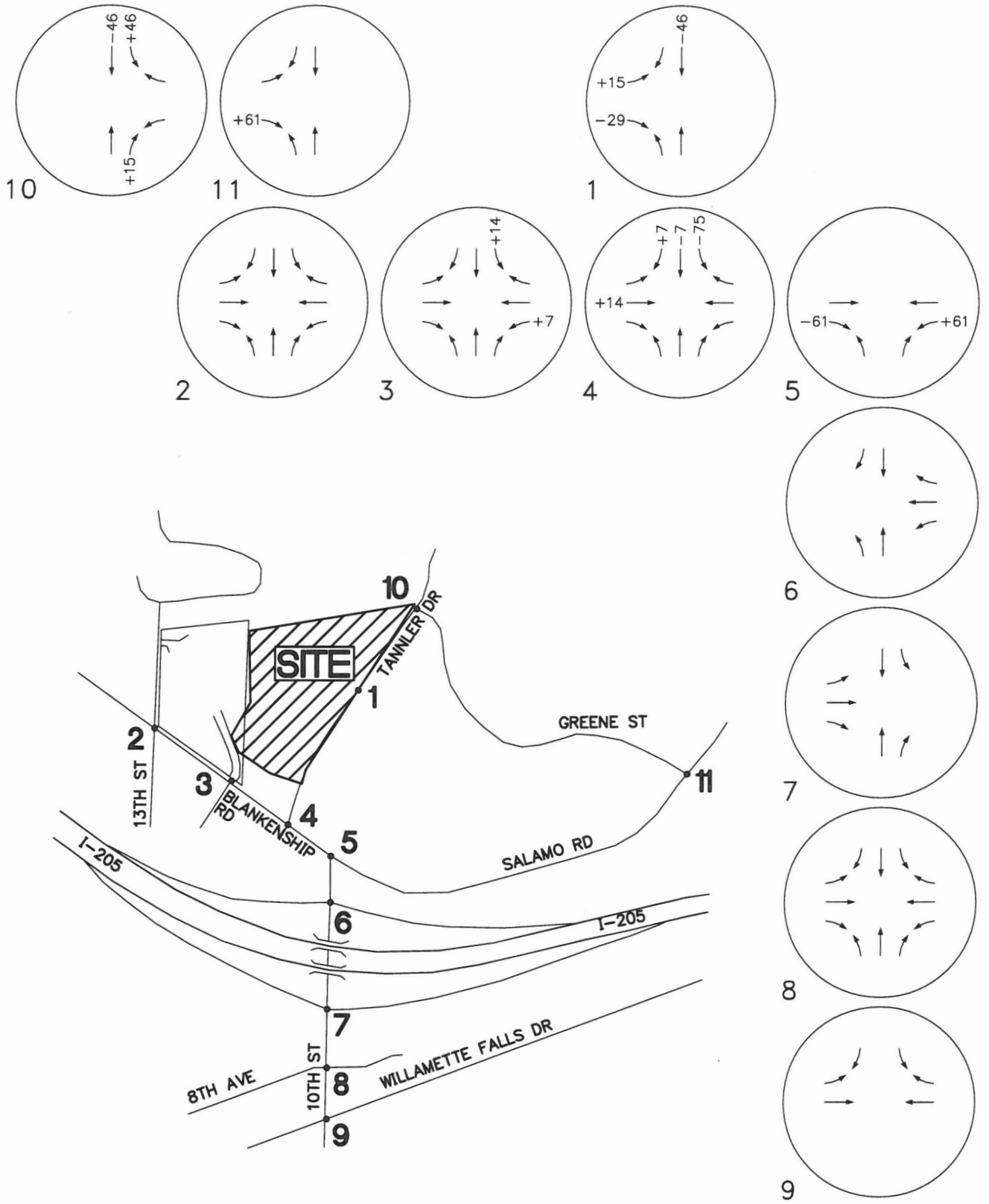

Portland 503.224.9560 Vancouver 360.695.7879 Seattle 206.749.9993
www.mcknze.com
Architecture ▪ Interiors
Planning ▪ Engineering
MACKENZIE.

DATE: 08.19.15
DRAWN BY: JTJ
CHECKED BY: BTA
JOB NO: 2130529.08

2017 POST-DEVELOPMENT VOLUMES - PM PEAK HOUR MITIGATION REROUTE VOLUMES

TANNLER DRIVE MIXED-USE PROJECT
WEST LINN, OREGON

FIGURE
1B

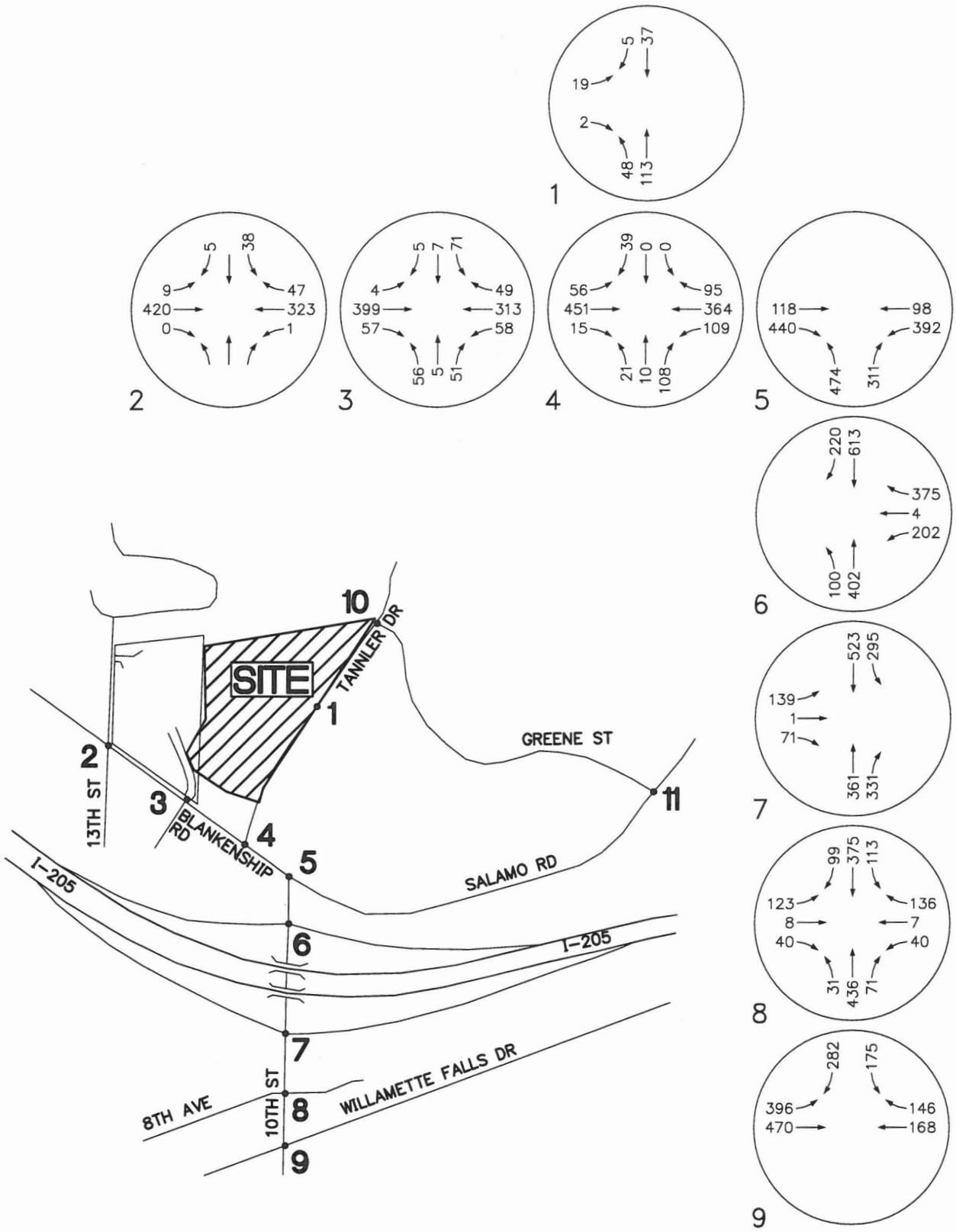

Portland 503.224.9560 Vancouver 360.695.7879 Seattle 206.749.9993
www.mcknze.com
Architecture ▪ Interiors
Planning ▪ Engineering
MACKENZIE.

DATE: 08.19.15
DRAWN BY: JTJ
CHECKED BY: BTA
JOB NO: 2130529.08

2017 POST-DEVELOPMENT VOLUMES - PM PEAK HOUR MITIGATION TOTAL VOLUMES

TANNLER DRIVE MIXED-USE PROJECT
WEST LINN, OREGON

FIGURE
2B


Proposed Mitigation
Right-out only on Tannler Drive
FIGURE
3
Google earth
N
100 ft


Proposed Mitigation
Dual westbound left-turn lanes
FIGURE
4
Google earth
100 ft
N

Tannler Drive Approach - Existing Lane Configuration

FIGURE
5

Intersection	
Int Delay, s/veh	4.9

Movement	EBL	EBT	EBR	WBL	WBT	WBR	NBL	NBT	NBR	SBL	SBT	SBR
Vol, veh/h	23	335	6	60	271	29	1	3	40	96	4	26
Conflicting Peds, #/hr	0	0	0	0	0	0	0	0	0	0	0	0
Sign Control	Free	Free	Free	Free	Free	Free	Stop	Stop	Stop	Stop	Stop	Stop
RT Channelized	-	-	None	-	-	None	-	-	None	-	-	None
Storage Length	50	-	-	150	-	-	-	-	0	-	-	25
Veh in Median Storage, #	-	0	-	-	0	-	-	0	-	-	0	-
Grade, %	-	0	-	-	0	-	-	0	-	-	0	-
Peak Hour Factor	94	94	94	94	94	94	94	94	94	94	94	94
Heavy Vehicles, %	25	3	0	7	6	0	7	0	0	0	0	0
Mvmt Flow	24	356	6	64	288	31	1	3	43	102	4	28

Major/Minor	Major1			Major2			Minor1			Minor2		
Conflicting Flow All	319	0	0	363	0	0	843	856	360	841	843	304
Stage 1	-	-	-	-	-	-	409	409	-	431	431	-
Stage 2	-	-	-	-	-	-	434	447	-	410	412	-
Critical Hdwy	4.35	-	-	4.17	-	-	7.17	6.5	6.2	7.1	6.5	6.2
Critical Hdwy Stg 1	-	-	-	-	-	-	6.17	5.5	-	6.1	5.5	-
Critical Hdwy Stg 2	-	-	-	-	-	-	6.17	5.5	-	6.1	5.5	-
Follow-up Hdwy	2.425	-	-	2.263	-	-	3.563	4	3.3	3.5	4	3.3
Pot Cap-1 Maneuver	1122	-	-	1168	-	-	278	297	689	287	303	740
Stage 1	-	-	-	-	-	-	610	600	-	607	586	-
Stage 2	-	-	-	-	-	-	591	577	-	623	598	-
Platoon blocked, %		-	-		-	-						
Mov Cap-1 Maneuver	1122	-	-	1168	-	-	249	275	689	252	280	740
Mov Cap-2 Maneuver	-	-	-	-	-	-	249	275	-	252	280	-
Stage 1	-	-	-	-	-	-	597	587	-	594	554	-
Stage 2	-	-	-	-	-	-	534	545	-	569	585	-

Approach	EB	WB	NB	SB
HCM Control Delay, s	0.5	1.4	11.3	25.3
HCM LOS			B	D

Minor Lane/Major Mvmt	NBLn1	NBLn2	EBL	EBT	EBR	WBL	WBT	WBR	SBLn1	SBLn2
Capacity (veh/h)	268	689	1122	-	-	1168	-	-	253	740
HCM Lane V/C Ratio	0.016	0.062	0.022	-	-	0.055	-	-	0.42	0.037
HCM Control Delay (s)	18.6	10.6	8.3	-	-	8.3	-	-	29.2	10.1
HCM Lane LOS	C	B	A	-	-	A	-	-	D	B
HCM 95th %tile Q(veh)	0	0.2	0.1	-	-	0.2	-	-	2	0.1

Intersection	
Int Delay, s/veh	8.9

Movement	EBL	EBT	EBR	WBL	WBT	WBR	NBL	NBT	NBR	SBL	SBT	SBR
Vol, veh/h	23	380	6	60	289	48	1	3	40	142	4	29
Conflicting Peds, #/hr	0	0	0	0	0	0	0	0	0	0	0	0
Sign Control	Free	Free	Free	Free	Free	Free	Stop	Stop	Stop	Stop	Stop	Stop
RT Channelized	-	-	None	-	-	None	-	-	None	-	-	None
Storage Length	50	-	-	150	-	-	-	-	0	-	-	25
Veh in Median Storage, #	-	0	-	-	0	-	-	0	-	-	0	-
Grade, %	-	0	-	-	0	-	-	0	-	-	0	-
Peak Hour Factor	94	94	94	94	94	94	94	94	94	94	94	94
Heavy Vehicles, %	25	3	0	7	6	0	7	0	0	0	0	0
Mvmt Flow	24	404	6	64	307	51	1	3	43	151	4	31

Major/Minor	Major1			Major2			Minor1			Minor2		
Conflicting Flow All	359	0	0	411	0	0	919	942	407	919	921	333
Stage 1	-	-	-	-	-	-	456	456	-	461	461	-
Stage 2	-	-	-	-	-	-	463	486	-	458	460	-
Critical Hdwy	4.35	-	-	4.17	-	-	7.17	6.5	6.2	7.1	6.5	6.2
Critical Hdwy Stg 1	-	-	-	-	-	-	6.17	5.5	-	6.1	5.5	-
Critical Hdwy Stg 2	-	-	-	-	-	-	6.17	5.5	-	6.1	5.5	-
Follow-up Hdwy	2.425	-	-	2.263	-	-	3.563	4	3.3	3.5	4	3.3
Pot Cap-1 Maneuver	1083	-	-	1121	-	-	247	265	648	254	273	713
Stage 1	-	-	-	-	-	-	575	572	-	584	569	-
Stage 2	-	-	-	-	-	-	570	554	-	587	569	-
Platoon blocked, %		-	-		-	-						
Mov Cap-1 Maneuver	1083	-	-	1121	-	-	219	244	648	221	252	713
Mov Cap-2 Maneuver	-	-	-	-	-	-	219	244	-	221	252	-
Stage 1	-	-	-	-	-	-	562	559	-	571	537	-
Stage 2	-	-	-	-	-	-	510	522	-	533	556	-

Approach	EB	WB	NB	SB
HCM Control Delay, s	0.5	1.3	11.8	45.1
HCM LOS			B	E

Minor Lane/Major Mvmt	NBLn1	NBLn2	EBL	EBT	EBR	WBL	WBT	WBR	SBLn1	SBLn2
Capacity (veh/h)	237	648	1083	-	-	1121	-	-	222	713
HCM Lane V/C Ratio	0.018	0.066	0.023	-	-	0.057	-	-	0.7	0.043
HCM Control Delay (s)	20.5	10.9	8.4	-	-	8.4	-	-	52	10.3
HCM Lane LOS	C	B	A	-	-	A	-	-	F	B
HCM 95th %tile Q(veh)	0.1	0.2	0.1	-	-	0.2	-	-	4.5	0.1

Intersection	
Int Delay, s/veh	6.1

Movement	EBL	EBT	EBR	WBL	WBT	WBR	NBL	NBT	NBR	SBL	SBT	SBR
Vol, veh/h	54	408	15	109	319	49	21	10	108	46	7	30
Conflicting Peds, #/hr	0	0	2	7	0	1	2	0	0	0	0	0
Sign Control	Free	Free	Free	Free	Free	Free	Stop	Stop	Stop	Stop	Stop	Stop
RT Channelized	-	-	None	-	-	None	-	-	None	-	-	None
Storage Length	50	-	-	150	-	-	-	-	0	-	-	25
Veh in Median Storage, #	-	0	-	-	0	-	-	0	-	-	0	-
Grade, %	-	0	-	-	0	-	-	0	-	-	0	-
Peak Hour Factor	95	95	95	95	95	95	95	95	95	95	95	95
Heavy Vehicles, %	0	3	0	2	1	0	0	10	3	3	0	0
Mvmt Flow	57	429	16	115	336	52	22	11	114	48	7	32

Major/Minor	Major1			Major2			Minor1			Minor2		
Conflicting Flow All	389	0	0	447	0	0	1150	1172	446	1151	1154	366
Stage 1	-	-	-	-	-	-	553	553	-	593	593	-
Stage 2	-	-	-	-	-	-	597	619	-	558	561	-
Critical Hdwy	4.1	-	-	4.12	-	-	7.1	6.6	6.23	7.13	6.5	6.2
Critical Hdwy Stg 1	-	-	-	-	-	-	6.1	5.6	-	6.13	5.5	-
Critical Hdwy Stg 2	-	-	-	-	-	-	6.1	5.6	-	6.13	5.5	-
Follow-up Hdwy	2.2	-	-	2.218	-	-	3.5	4.09	3.327	3.527	4	3.3
Pot Cap-1 Maneuver	1181	-	-	1113	-	-	177	186	610	174	199	684
Stage 1	-	-	-	-	-	-	521	502	-	490	497	-
Stage 2	-	-	-	-	-	-	493	468	-	512	513	-
Platoon blocked, %		-	-		-	-						
Mov Cap-1 Maneuver	1179	-	-	1107	-	-	144	158	605	118	169	682
Mov Cap-2 Maneuver	-	-	-	-	-	-	144	158	-	118	169	-
Stage 1	-	-	-	-	-	-	495	477	-	466	445	-
Stage 2	-	-	-	-	-	-	414	419	-	385	487	-

Approach	EB	WB	NB	SB
HCM Control Delay, s	0.9	2	17.6	39.9
HCM LOS			C	E

Minor Lane/Major Mvmt	NBLn1	NBLn2	EBL	EBT	EBR	WBL	WBT	WBR	SBLn1	SBLn2
Capacity (veh/h)	148	605	1179	-	-	1107	-	-	123	682
HCM Lane V/C Ratio	0.22	0.188	0.048	-	-	0.104	-	-	0.454	0.046
HCM Control Delay (s)	36.1	12.3	8.2	-	-	8.6	-	-	56.5	10.5
HCM Lane LOS	E	B	A	-	-	A	-	-	F	B
HCM 95th %tile Q(veh)	0.8	0.7	0.2	-	-	0.3	-	-	2	0.1

Intersection	
Int Delay, s/veh	11.6

Movement	EBL	EBT	EBR	WBL	WBT	WBR	NBL	NBT	NBR	SBL	SBT	SBR
Vol, veh/h	56	437	15	109	364	95	21	10	108	75	7	32
Conflicting Peds, #/hr	0	0	2	7	0	1	2	0	0	0	0	0
Sign Control	Free	Free	Free	Free	Free	Free	Stop	Stop	Stop	Stop	Stop	Stop
RT Channelized	-	-	None	-	-	None	-	-	None	-	-	None
Storage Length	50	-	-	150	-	-	-	-	0	-	-	25
Veh in Median Storage, #	-	0	-	-	0	-	-	0	-	-	0	-
Grade, %	-	0	-	-	0	-	-	0	-	-	0	-
Peak Hour Factor	95	95	95	95	95	95	95	95	95	95	95	95
Heavy Vehicles, %	0	3	0	2	1	0	0	10	3	3	0	0
Mvmt Flow	59	460	16	115	383	100	22	11	114	79	7	34

Major/Minor	Major1			Major2			Minor1			Minor2		
Conflicting Flow All	485	0	0	478	0	0	1256	1303	477	1258	1261	437
Stage 1	-	-	-	-	-	-	588	588	-	665	665	-
Stage 2	-	-	-	-	-	-	668	715	-	593	596	-
Critical Hdwy	4.1	-	-	4.12	-	-	7.1	6.6	6.23	7.13	6.5	6.2
Critical Hdwy Stg 1	-	-	-	-	-	-	6.1	5.6	-	6.13	5.5	-
Critical Hdwy Stg 2	-	-	-	-	-	-	6.1	5.6	-	6.13	5.5	-
Follow-up Hdwy	2.2	-	-	2.218	-	-	3.5	4.09	3.327	3.527	4	3.3
Pot Cap-1 Maneuver	1088	-	-	1084	-	-	150	155	586	147	172	624
Stage 1	-	-	-	-	-	-	499	483	-	448	461	-
Stage 2	-	-	-	-	-	-	451	423	-	490	495	-
Platoon blocked, %		-	-		-	-						
Mov Cap-1 Maneuver	1086	-	-	1078	-	-	120	131	582	97	145	622
Mov Cap-2 Maneuver	-	-	-	-	-	-	120	131	-	97	145	-
Stage 1	-	-	-	-	-	-	471	456	-	423	411	-
Stage 2	-	-	-	-	-	-	374	377	-	362	467	-

Approach	EB	WB	NB	SB
HCM Control Delay, s	0.9	1.7	19.8	98.4
HCM LOS			C	F

Minor Lane/Major Mvmt	NBLn1	NBLn2	EBL	EBT	EBR	WBL	WBT	WBR	SBLn1	SBLn2
Capacity (veh/h)	123	582	1086	-	-	1078	-	-	100	622
HCM Lane V/C Ratio	0.265	0.195	0.054	-	-	0.106	-	-	0.863	0.054
HCM Control Delay (s)	44.5	12.7	8.5	-	-	8.7	-	-	132.4	11.1
HCM Lane LOS	E	B	A	-	-	A	-	-	F	B
HCM 95th %tile Q(veh)	1	0.7	0.2	-	-	0.4	-	-	4.9	0.2

Intersection	
Int Delay, s/veh	3.7

Movement	EBL	EBT	EBR	WBL	WBT	WBR	NBL	NBT	NBR	SBL	SBT	SBR
Vol, veh/h	6	335	24	35	243	46	30	4	23	72	5	4
Conflicting Peds, #/hr	0	0	0	0	0	0	0	0	0	0	0	0
Sign Control	Free	Free	Free	Free	Free	Free	Stop	Stop	Stop	Stop	Stop	Stop
RT Channelized	-	-	None	-	-	None	-	-	None	-	-	None
Storage Length	50	-	-	50	-	-	-	-	-	-	-	-
Veh in Median Storage, #	-	0	-	-	0	-	-	0	-	-	0	-
Grade, %	-	0	-	-	0	-	-	0	-	-	0	-
Peak Hour Factor	90	90	90	90	90	90	90	90	90	90	90	90
Heavy Vehicles, %	0	3	0	3	6	19	0	0	5	0	0	0
Mvmt Flow	7	372	27	39	270	51	33	4	26	80	6	4

Major/Minor	Major1			Major2			Minor1			Minor2		
Conflicting Flow All	321	0	0	399	0	0	777	798	386	787	785	296
Stage 1	-	-	-	-	-	-	399	399	-	373	373	-
Stage 2	-	-	-	-	-	-	378	399	-	414	412	-
Critical Hdwy	4.1	-	-	4.13	-	-	7.1	6.5	6.25	7.1	6.5	6.2
Critical Hdwy Stg 1	-	-	-	-	-	-	6.1	5.5	-	6.1	5.5	-
Critical Hdwy Stg 2	-	-	-	-	-	-	6.1	5.5	-	6.1	5.5	-
Follow-up Hdwy	2.2	-	-	2.227	-	-	3.5	4	3.345	3.5	4	3.3
Pot Cap-1 Maneuver	1250	-	-	1154	-	-	317	321	655	312	327	748
Stage 1	-	-	-	-	-	-	631	606	-	652	622	-
Stage 2	-	-	-	-	-	-	648	606	-	620	598	-
Platoon blocked, %		-	-		-	-						
Mov Cap-1 Maneuver	1250	-	-	1154	-	-	302	308	655	288	314	748
Mov Cap-2 Maneuver	-	-	-	-	-	-	302	308	-	288	314	-
Stage 1	-	-	-	-	-	-	627	603	-	648	601	-
Stage 2	-	-	-	-	-	-	617	586	-	588	595	-

Approach	EB	WB	NB	SB
HCM Control Delay, s	0.1	0.9	16.1	22.1
HCM LOS			C	C

Minor Lane/Major Mvmt	NBLn1	EBL	EBT	EBR	WBL	WBT	WBR	SBLn1
Capacity (veh/h)	387	1250	-	-	1154	-	-	299
HCM Lane V/C Ratio	0.164	0.005	-	-	0.034	-	-	0.301
HCM Control Delay (s)	16.1	7.9	-	-	8.2	-	-	22.1
HCM Lane LOS	C	A	-	-	A	-	-	C
HCM 95th %tile Q(veh)	0.6	0	-	-	0.1	-	-	1.2

Intersection	
Int Delay, s/veh	1.8

Movement	EBL	EBT	EBR	WBL	WBT	WBR	NBL	NBT	NBR	SBL	SBT	SBR
Vol, veh/h	24	403	6	60	289	48	1	3	40	0	0	33
Conflicting Peds, #/hr	0	0	0	0	0	0	0	0	0	0	0	0
Sign Control	Free	Free	Free	Free	Free	Free	Stop	Stop	Stop	Stop	Stop	Stop
RT Channelized	-	-	None	-	-	None	-	-	None	-	-	None
Storage Length	50	-	-	150	-	-	-	-	0	-	-	0
Veh in Median Storage, #	-	0	-	-	0	-	-	0	-	-	0	-
Grade, %	-	0	-	-	0	-	-	0	-	-	0	-
Peak Hour Factor	94	94	94	94	94	94	94	94	94	94	94	94
Heavy Vehicles, %	25	3	0	7	6	0	7	0	0	0	0	0
Mvmt Flow	26	429	6	64	307	51	1	3	43	0	0	35

Major/Minor	Major1			Major2			Minor1			Minor2		
Conflicting Flow All	359	0	0	435	0	0	944	969	432	946	947	333
Stage 1	-	-	-	-	-	-	483	483	-	461	461	-
Stage 2	-	-	-	-	-	-	461	486	-	485	486	-
Critical Hdwy	4.35	-	-	4.17	-	-	7.17	6.5	6.2	7.1	6.5	6.2
Critical Hdwy Stg 1	-	-	-	-	-	-	6.17	5.5	-	6.1	5.5	-
Critical Hdwy Stg 2	-	-	-	-	-	-	6.17	5.5	-	6.1	5.5	-
Follow-up Hdwy	2.425	-	-	2.263	-	-	3.563	4	3.3	3.5	4	3.3
Pot Cap-1 Maneuver	1083	-	-	1099	-	-	237	256	628	243	263	713
Stage 1	-	-	-	-	-	-	555	556	-	584	569	-
Stage 2	-	-	-	-	-	-	571	554	-	567	554	-
Platoon blocked, %		-	-		-	-						
Mov Cap-1 Maneuver	1083	-	-	1099	-	-	211	235	628	210	242	713
Mov Cap-2 Maneuver	-	-	-	-	-	-	211	235	-	210	242	-
Stage 1	-	-	-	-	-	-	542	543	-	570	536	-
Stage 2	-	-	-	-	-	-	511	522	-	513	541	-

Approach	EB	WB	NB	SB
HCM Control Delay, s	0.5	1.3	12	10.3
HCM LOS			B	B

Minor Lane/Major Mvmt	NBLn1	NBLn2	EBL	EBT	EBR	WBL	WBT	WBR	SBLn1
Capacity (veh/h)	229	628	1083	-	-	1099	-	-	713
HCM Lane V/C Ratio	0.019	0.068	0.024	-	-	0.058	-	-	0.049
HCM Control Delay (s)	21	11.1	8.4	-	-	8.5	-	-	10.3
HCM Lane LOS	C	B	A	-	-	A	-	-	B
HCM 95th %tile Q(veh)	0.1	0.2	0.1	-	-	0.2	-	-	0.2

Movement	EBT	EBR	WBL	WBT	NBL	NBR
Lane Configurations						
Volume (vph)	45	396	583	62	335	247
Ideal Flow (vphpl)	1900	1900	1900	1900	1900	1900
Total Lost time (s)	5.5	5.5	5.5	6.0	5.5	5.5
Lane Util. Factor	1.00	1.00	*0.94	1.00	1.00	1.00
Frt	1.00	0.85	1.00	1.00	1.00	0.85
Flt Protected	1.00	1.00	0.95	1.00	0.95	1.00
Satd. Flow (prot)	1792	1583	3327	1827	1687	1404
Flt Permitted	1.00	1.00	0.95	1.00	0.95	1.00
Satd. Flow (perm)	1792	1583	3327	1827	1687	1404
Peak-hour factor, PHF	0.88	0.88	0.88	0.88	0.88	0.88
Adj. Flow (vph)	51	450	662	70	381	281
RTOR Reduction (vph)	0	76	0	0	0	55
Lane Group Flow (vph)	51	374	662	70	381	226
Heavy Vehicles (%)	6%	2%	2%	4%	7%	15%
Turn Type	NA	custom	Prot	NA	Prot	custom
Protected Phases	4	4 5 7	3	8	5 6 7	3 5 6 7
Permitted Phases		4				5 6 7
Actuated Green, G (s)	8.4	46.3	28.9	42.3	46.2	80.6
Effective Green, g (s)	8.4	46.3	28.9	42.3	46.2	80.6
Actuated g/C Ratio	0.08	0.46	0.29	0.42	0.46	0.81
Clearance Time (s)	5.5		5.5	6.0		
Vehicle Extension (s)	2.3		2.3	2.3		
Lane Grp Cap (vph)	150	732	961	772	779	1131
v/s Ratio Prot	0.03	c0.24	c0.20	0.04	c0.23	0.16
v/s Ratio Perm						
v/c Ratio	0.34	0.51	0.69	0.09	0.49	0.20
Uniform Delay, d1	43.2	18.9	31.6	17.3	18.7	2.2
Progression Factor	1.00	1.00	1.00	1.00	0.30	0.00
Incremental Delay, d2	0.8	0.4	1.8	0.0	0.5	0.0
Delay (s)	44.0	19.3	33.4	17.3	6.2	0.0
Level of Service	D	B	C	B	A	A
Approach Delay (s)	21.8			31.8	3.6	
Approach LOS	C			C	A	

Intersection Summary			
HCM 2000 Control Delay	19.3	HCM 2000 Level of Service	B
HCM 2000 Volume to Capacity ratio	0.69		
Actuated Cycle Length (s)	100.0	Sum of lost time (s)	27.5
Intersection Capacity Utilization	51.4%	ICU Level of Service	A
Analysis Period (min)	15		

c Critical Lane Group

Intersection	
Int Delay, s/veh	5.7

Movement	EBL	EBT	EBR	WBL	WBT	WBR	NBL	NBT	NBR	SBL	SBT	SBR
Vol, veh/h	4	399	57	58	313	49	56	5	51	71	7	5
Conflicting Peds, #/hr	1	0	7	7	0	1	2	0	2	2	0	2
Sign Control	Free	Free	Free	Free	Free	Free	Stop	Stop	Stop	Stop	Stop	Stop
RT Channelized	-	-	None	-	-	None	-	-	None	-	-	None
Storage Length	50	-	-	50	-	-	-	-	-	-	-	-
Veh in Median Storage, #	-	0	-	-	0	-	-	0	-	-	0	-
Grade, %	-	0	-	-	0	-	-	0	-	-	0	-
Peak Hour Factor	94	94	94	94	94	94	94	94	94	94	94	94
Heavy Vehicles, %	0	3	4	2	1	0	0	0	2	0	0	0
Mvmt Flow	4	424	61	62	333	52	60	5	54	76	7	5

Major/Minor	Major1			Major2			Minor1			Minor2		
Conflicting Flow All	387	0	0	487	0	0	956	976	464	979	980	368
Stage 1	-	-	-	-	-	-	465	465	-	484	484	-
Stage 2	-	-	-	-	-	-	491	511	-	495	496	-
Critical Hdwy	4.1	-	-	4.12	-	-	7.1	6.5	6.22	7.1	6.5	6.2
Critical Hdwy Stg 1	-	-	-	-	-	-	6.1	5.5	-	6.1	5.5	-
Critical Hdwy Stg 2	-	-	-	-	-	-	6.1	5.5	-	6.1	5.5	-
Follow-up Hdwy	2.2	-	-	2.218	-	-	3.5	4	3.318	3.5	4	3.3
Pot Cap-1 Maneuver	1183	-	-	1076	-	-	240	253	598	231	252	682
Stage 1	-	-	-	-	-	-	581	566	-	568	555	-
Stage 2	-	-	-	-	-	-	563	540	-	560	549	-
Platoon blocked, %		-	-		-	-						
Mov Cap-1 Maneuver	1176	-	-	1070	-	-	220	237	594	195	236	677
Mov Cap-2 Maneuver	-	-	-	-	-	-	220	237	-	195	236	-
Stage 1	-	-	-	-	-	-	578	563	-	565	522	-
Stage 2	-	-	-	-	-	-	516	508	-	499	546	-

Approach	EB	WB	NB	SB
HCM Control Delay, s	0.1	1.2	23.7	34.7
HCM LOS			C	D

Minor Lane/Major Mvmt	NBLn1	EBL	EBT	EBR	WBL	WBT	WBR	SBLn1
Capacity (veh/h)	310	1176	-	-	1070	-	-	207
HCM Lane V/C Ratio	0.384	0.004	-	-	0.058	-	-	0.427
HCM Control Delay (s)	23.7	8.1	-	-	8.6	-	-	34.7
HCM Lane LOS	C	A	-	-	A	-	-	D
HCM 95th %tile Q(veh)	1.7	0	-	-	0.2	-	-	2

Intersection	
Int Delay, s/veh	3.7

Movement	EBL	EBT	EBR	WBL	WBT	WBR	NBL	NBT	NBR	SBL	SBT	SBR
Vol, veh/h	56	451	15	109	364	95	21	10	108	0	0	39
Conflicting Peds, #/hr	0	0	2	7	0	1	2	0	0	0	0	0
Sign Control	Free	Free	Free	Free	Free	Free	Stop	Stop	Stop	Stop	Stop	Stop
RT Channelized	-	-	None	-	-	None	-	-	None	-	-	None
Storage Length	50	-	-	150	-	-	-	-	0	-	-	0
Veh in Median Storage, #	-	0	-	-	0	-	-	0	-	-	0	-
Grade, %	-	0	-	-	0	-	-	0	-	-	0	-
Peak Hour Factor	95	95	95	95	95	95	95	95	95	95	95	95
Heavy Vehicles, %	0	3	0	2	1	0	0	10	3	3	0	0
Mvmt Flow	59	475	16	115	383	100	22	11	114	0	0	41

Major/Minor	Major1			Major2			Minor1			Minor2		
Conflicting Flow All	485	0	0	493	0	0	1268	1318	492	1273	1275	437
Stage 1	-	-	-	-	-	-	603	603	-	665	665	-
Stage 2	-	-	-	-	-	-	665	715	-	608	610	-
Critical Hdwy	4.1	-	-	4.12	-	-	7.1	6.6	6.23	7.13	6.5	6.2
Critical Hdwy Stg 1	-	-	-	-	-	-	6.1	5.6	-	6.13	5.5	-
Critical Hdwy Stg 2	-	-	-	-	-	-	6.1	5.6	-	6.13	5.5	-
Follow-up Hdwy	2.2	-	-	2.218	-	-	3.5	4.09	3.327	3.527	4	3.3
Pot Cap-1 Maneuver	1088	-	-	1071	-	-	147	152	575	144	168	624
Stage 1	-	-	-	-	-	-	489	476	-	448	461	-
Stage 2	-	-	-	-	-	-	453	423	-	481	488	-
Platoon blocked, %		-	-		-	-						
Mov Cap-1 Maneuver	1086	-	-	1065	-	-	120	128	571	95	141	622
Mov Cap-2 Maneuver	-	-	-	-	-	-	120	128	-	95	141	-
Stage 1	-	-	-	-	-	-	462	449	-	423	411	-
Stage 2	-	-	-	-	-	-	377	377	-	354	461	-

Approach	EB	WB	NB	SB
HCM Control Delay, s	0.9	1.7	20.1	11.2
HCM LOS			C	B

Minor Lane/Major Mvmt	NBLn1	NBLn2	EBL	EBT	EBR	WBL	WBT	WBR	SBLn1
Capacity (veh/h)	122	571	1086	-	-	1065	-	-	622
HCM Lane V/C Ratio	0.267	0.199	0.054	-	-	0.108	-	-	0.066
HCM Control Delay (s)	45	12.9	8.5	-	-	8.8	-	-	11.2
HCM Lane LOS	E	B	A	-	-	A	-	-	B
HCM 95th %tile Q(veh)	1	0.7	0.2	-	-	0.4	-	-	0.2

Movement	EBT	EBR	WBL	WBT	NBL	NBR
Lane Configurations						
Volume (vph)	118	440	392	98	474	311
Ideal Flow (vphpl)	1900	1900	1900	1900	1900	1900
Total Lost time (s)	5.5	5.5	5.5	6.0	5.5	5.5
Lane Util. Factor	1.00	1.00	*0.78	1.00	1.00	1.00
Frpb, ped/bikes	1.00	1.00	1.00	1.00	1.00	1.00
Flpb, ped/bikes	1.00	1.00	1.00	1.00	1.00	1.00
Frt	1.00	0.85	1.00	1.00	1.00	0.85
Flt Protected	1.00	1.00	0.95	1.00	0.95	1.00
Satd. Flow (prot)	1881	1583	2761	1900	1787	1599
Flt Permitted	1.00	1.00	0.95	1.00	0.95	1.00
Satd. Flow (perm)	1881	1583	2761	1900	1787	1599
Peak-hour factor, PHF	0.88	0.88	0.88	0.88	0.88	0.88
Adj. Flow (vph)	134	500	445	111	539	353
RTOR Reduction (vph)	0	133	0	0	0	27
Lane Group Flow (vph)	134	367	445	111	539	326
Confl. Peds. (#/hr)						1
Heavy Vehicles (%)	1%	2%	2%	0%	1%	1%
Turn Type	NA	custom	Prot	NA	Prot	custom
Protected Phases	4	4 5 7	3	8	5 6 7	3 5 6 7
Permitted Phases		4				5 6 7
Actuated Green, G (s)	10.5	63.1	23.6	39.1	63.4	92.5
Effective Green, g (s)	10.5	63.1	23.6	39.1	63.4	92.5
Actuated g/C Ratio	0.09	0.55	0.21	0.34	0.56	0.81
Clearance Time (s)	5.5		5.5	6.0		
Vehicle Extension (s)	2.3		2.3	2.3		
Lane Grp Cap (vph)	173	876	571	651	993	1297
v/s Ratio Prot	c0.07	0.23	c0.16	0.06	c0.30	0.20
v/s Ratio Perm						
v/c Ratio	0.77	0.42	0.78	0.17	0.54	0.25
Uniform Delay, d1	50.6	14.8	42.7	26.1	16.1	2.5
Progression Factor	1.00	1.00	1.00	1.00	0.43	0.09
Incremental Delay, d2	18.2	0.2	6.3	0.1	0.7	0.0
Delay (s)	68.8	15.0	49.0	26.2	7.6	0.3
Level of Service	E	B	D	C	A	A
Approach Delay (s)	26.3			44.5	4.7	
Approach LOS	C			D	A	

Intersection Summary			
HCM 2000 Control Delay	21.9	HCM 2000 Level of Service	C
HCM 2000 Volume to Capacity ratio	0.70		
Actuated Cycle Length (s)	114.0	Sum of lost time (s)	27.5
Intersection Capacity Utilization	53.7%	ICU Level of Service	A
Analysis Period (min)	15		
c Critical Lane Group			

Intersection: 5: 10th Street & Blankenship Road/Salamo Drive

Movement	EB	EB	WB	WB	WB	NB	NB
Directions Served	T	R	L	L	T	L	R
Maximum Queue (ft)	200	185	224	249	336	119	93
Average Queue (ft)	51	91	151	163	60	50	3
95th Queue (ft)	122	155	227	245	216	104	40
Link Distance (ft)	248				1332		164
Upstream Blk Time (%)	0						0
Queuing Penalty (veh)	1						0
Storage Bay Dist (ft)		100	200	200		100	
Storage Blk Time (%)	1	6	3	4	0	2	
Queuing Penalty (veh)	5	3	2	2	0	5	

Zone Summary

Zone wide Queuing Penalty: 18

Queuing and Blocking Report
Post-Development (2017) with Alternative 4B

8/20/2015

Intersection: 5: 10th Street & Blankenship Road/Salamo Drive

Movement	EB	EB	WB	WB	WB	NB	NB
Directions Served	T	R	L	L	T	L	R
Maximum Queue (ft)	197	180	205	208	129	149	174
Average Queue (ft)	93	83	134	117	48	79	16
95th Queue (ft)	160	149	193	185	103	139	94
Link Distance (ft)	251				1329		164
Upstream Blk Time (%)	0					0	0
Queuing Penalty (veh)	0					0	4
Storage Bay Dist (ft)		100	200	200		100	
Storage Blk Time (%)	14	3	0	0	0	5	
Queuing Penalty (veh)	63	3	0	0	0	16	

Zone Summary

Zone wide Queuing Penalty: 86

Shroyer, Shauna

From: Janet Jones <JTJones@mcknze.com>
Sent: Friday, August 21, 2015 11:54 AM
To: Pelz, Zach
Subject: File Transfer: Tannler Mixed-Use Project Revised Mitigation Measures - Tannler Road Apartments TIA

A transfer (File Transfer) has arrived on the Mackenzie Info Exchange Site.

Download all associated files

Additional links:

Reply to All

Project Name: Tannler Road Apartments TIA
Project Number: 213052905

From: Janet Jones
To: bkc@dksassociates.com; kle@westlinnoregon.gov; zpelz@westlinnoregon.gov; LCALVERT@westlinnoregon.gov
CC: Brent Ahrend (Mackenzie); rmorgan@conam.com; mmahoney@conam.com; Abraham.TAYAR@odot.state.or.us; Joshua.C.BROOKING@odot.state.or.us; MRobinson@perkinscoie.com; Jeff@parkerdev.com
Subject: Tannler Mixed-Use Project Revised Mitigation Measures
Sent via: Info Exchange
Expiration Date: 9/20/2015
Remarks: All,

There seems to have been a mix up with the attachments of the letter sent earlier. A link to the letter with the correct attachments is provided. I apologize for the confusion.

Janet T. Jones, EIT
Transportation Planning

Architecture · Interiors · Engineering · Planning

P 503.224.9560 **W** mcknze.com **C** vcard

RiverEast Center
1515 SE Water Ave, Suite 100
Portland OR 97214

Transferred Files

NAME	TYPE	DATE	TIME	SIZE
LTR-City of West Linn-Revised Mitigation Measures-150821.pdf	PDF File	8/21/2015	11:51 AM	2,474 KB

To share and learn more about Newforma Info Exchange visit www.newformant.com

Janet T. Jones, EIT
Transportation Planning

MACKENZIE.
DESIGN DRIVEN | CLIENT FOCUSED

Architecture · Interiors · Engineering · Planning

P 503.224.9560 **W** mcknze.com **C** vcard

RiverEast Center
1515 SE Water Ave, Suite 100
Portland OR 97214