CITY OF WEST LINN, OREGON

CEDAROAK DRIVE / KENTHORPE WAY
STORM SEWER

JULY, 1984

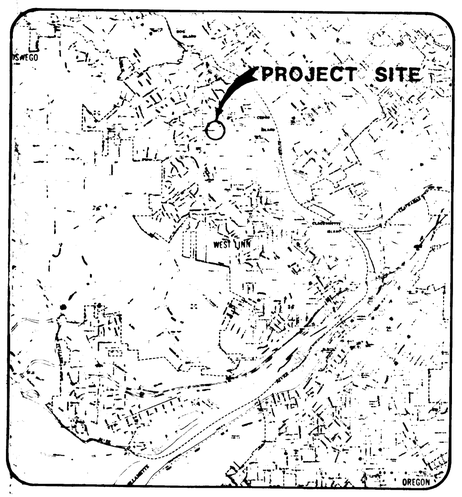

VICINITY MAP

PREPARED BY

MSA
MURRAY, SMITH & ASSOCIATES INC
Engineers / Planners

INDEX OF DRAWINGS

SHEET NO.	TITLE
1	INDEX OF DRAWINGS
2	PLAN & PROFILE - STA. 0+00 to STA. 2+78
3	PLAN & PROFILE - STA. 2+78 to END
4	STORM SEWER DETAILS
5	INLET STRUCTURE DETAILS

- RECORD DRAWINGS -

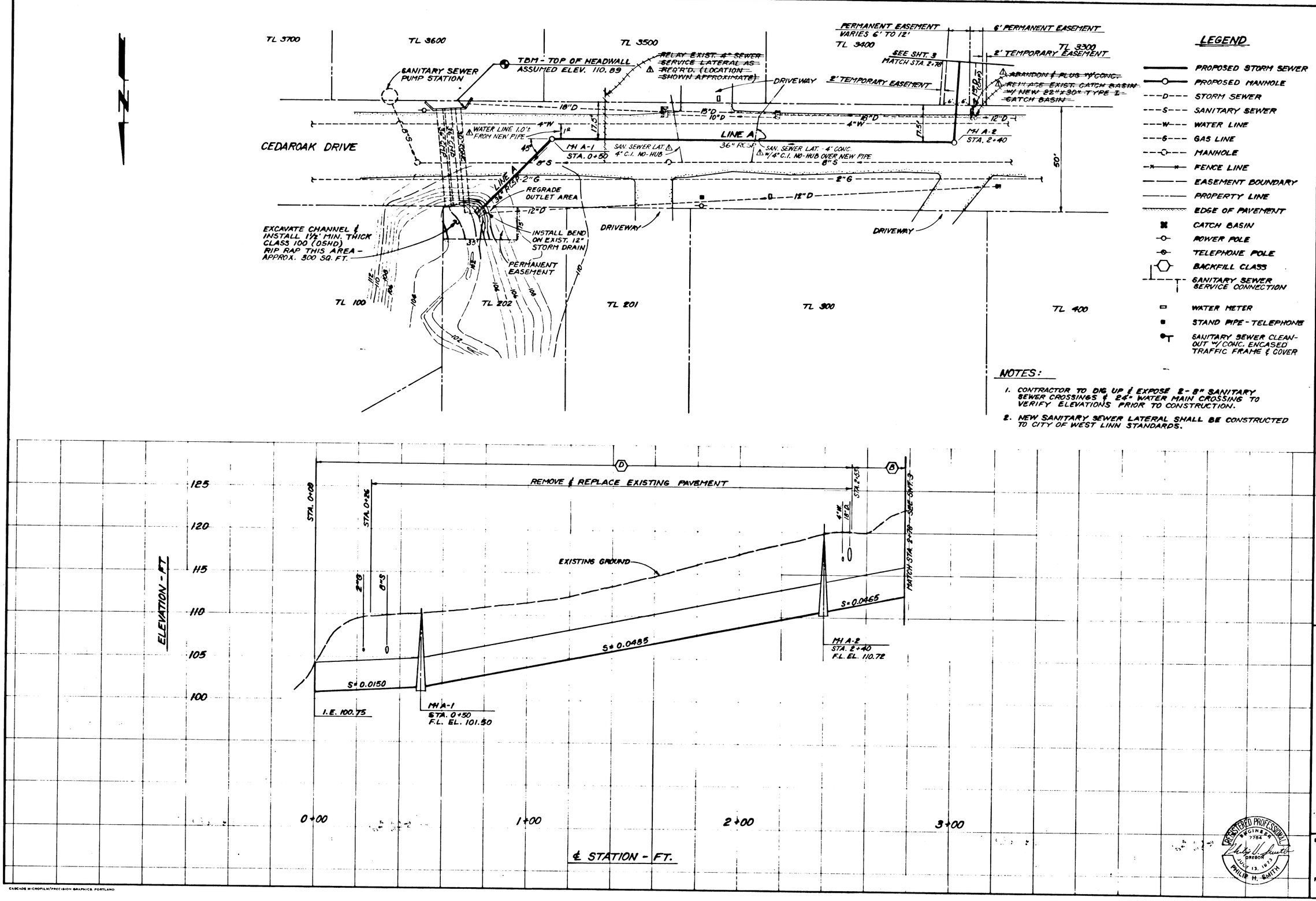

NO.	REVISION	BY	DATE
1	RECORD DRAWING	RD	2-4-85

PLAN & PROFILE
STA. 0+00 to 2+78

SCALE 1"=20'H; 1"=5'V. DATE JULY, 1984

CITY OF WEST LINN, OREGON
CEDAROAK DRIVE / KENTHORPE WAY
STORM SEWER

DESIGNED PHS DRAWN RFD CHECKED HRM

MURRAY, SMITH & ASSOCIATES
Engineers / Planners
Harrison Square
1800 S.W. First, Suite 510
Portland, Oregon 97201
503-225-9010

MSA

REGISTERED PROFESSIONAL ENGINEER 7784 OREGON JULY 13, 1973 PHILIP H. SMITH

SHEET 2 of 5

FILE NO. 82-0039.02

CASCADE MICROFILM/PRECISION GRAPHICS PORTLAND

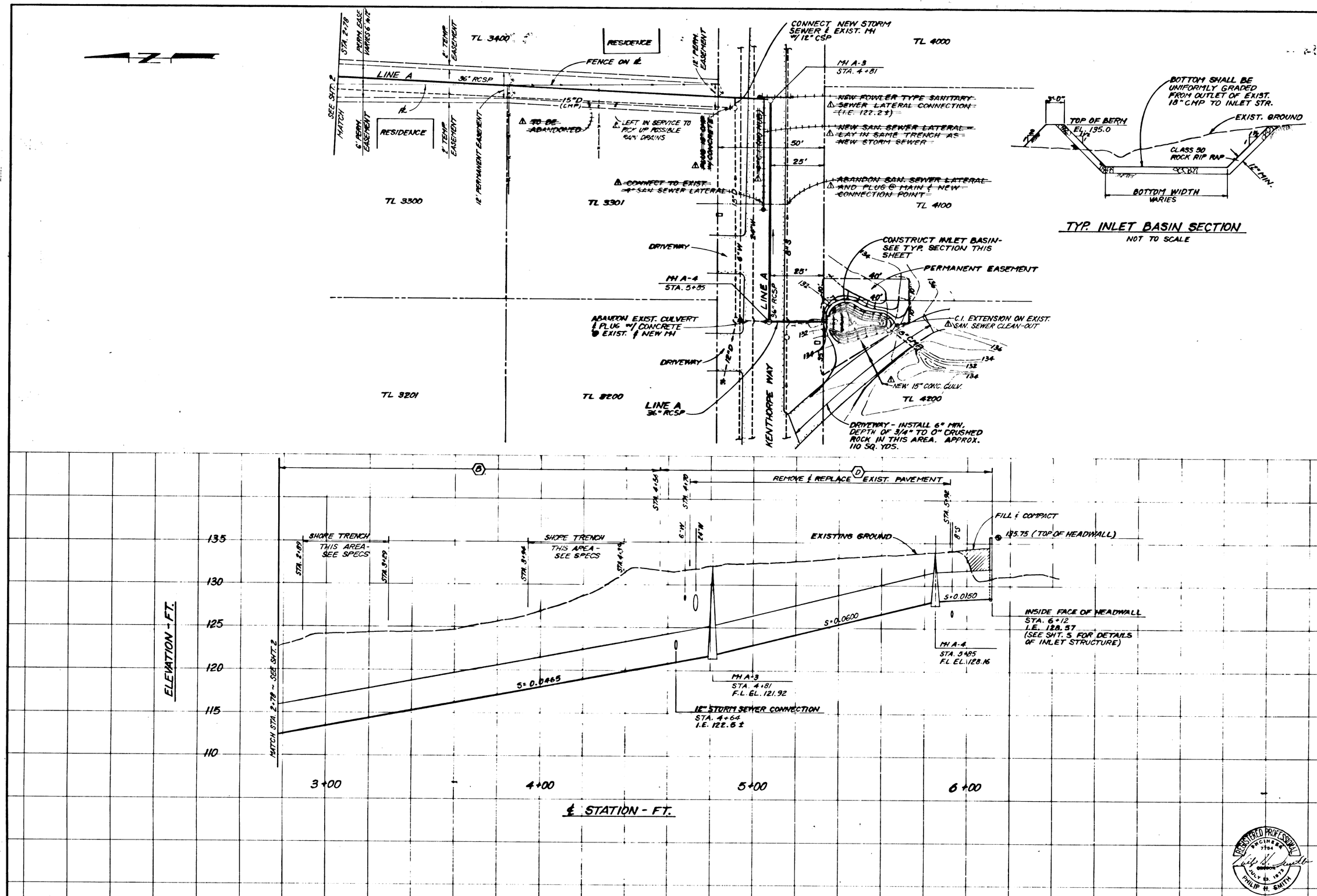

NO.	REVISION	BY	DATE
1	RECORD DRAWING	RD	2-4-85

PLAN & PROFILE
STA. 2+78 to END

SCALE 1"=20'H; 1"=5'V. DATE JULY, 1984

CITY OF WEST LINN, OREGON
CEDAROAK DRIVE / KENTHORPE WAY
STORM SEWER

DESIGNED PHS DRAWN RFD CHECKED HRM

MSA
MURRAY, SMITH & ASSOCIATES
Engineers / Planners
Harrison Square
1800 S.W. First Suite 510
Portland, Oregon 97201
503-225-9010

REGISTERED PROFESSIONAL ENGINEER 7784 OREGON JULY 13, 1973 PHILIP H. SMITH

SHEET 3 of 5

FILE NO. 82-0039.02

CASCADE MICROFILM/PRECISION GRAPHICS PORTLAND

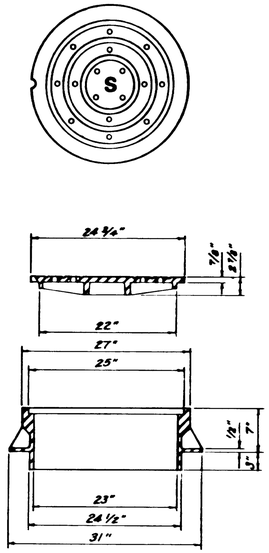

MANHOLE FRAME & COVER

NOT TO SCALE

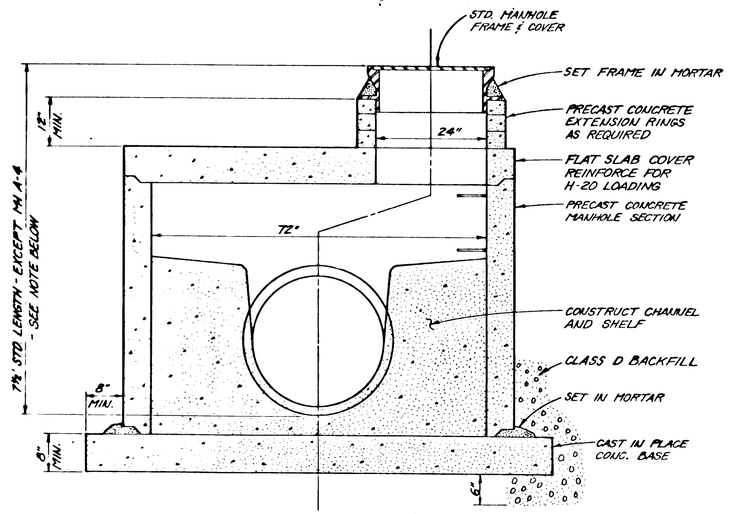

72" DIA. MANHOLE

NOT TO SCALE

NOTE:

FOR MH A-4, PRECAST CONCRETE MANHOLE SECTION TO BE 4 1/2' HIGH TO ACCOMODATE SHALLOW DEPTH. ORIENT COVER OVER FLOW CHANNEL ON MH A-4.

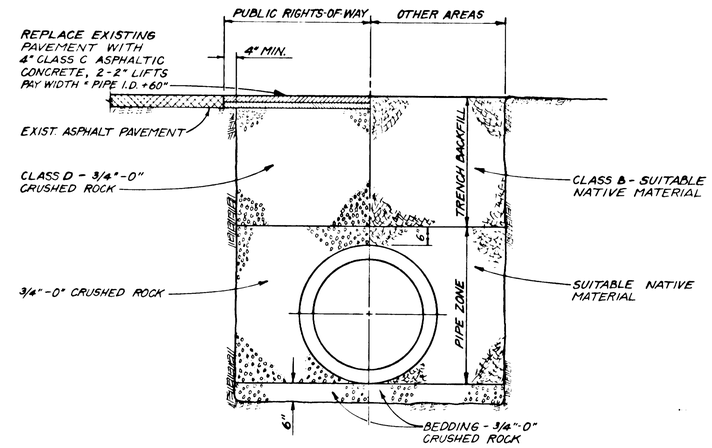

TYPICAL TRENCH SECTION

NOT TO SCALE

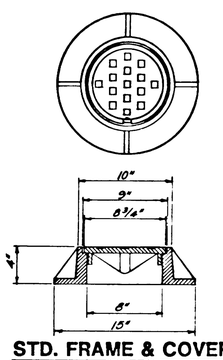

STD. FRAME & COVER

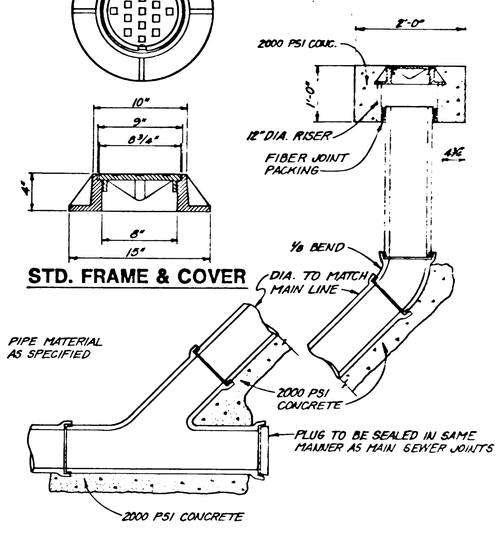

STD. SEWER CLEAN-OUT

REGISTERED PROFESSIONAL ENGINEER 7784 OREGON JULY 13, 1973 PHILIP H. SMITH

NO.	REVISION	BY	DATE
1	RECORD DRAWING	RD	2-4-85

STORM SEWER DETAILS

SCALE AS SHOWN | DATE JULY, 1984

CITY OF WEST LINN, OREGON
CEDAROAK DRIVE / KENTHORPE WAY
STORM SEWER

DESIGNED PHS | DRAWN RFD | CHECKED HRM

MURRAY, SMITH & ASSOCIATES
Engineers / Planners
Harrison Square
1800 S.W. First, Suite 510
Portland, Oregon 97201
503-225-9010

MSA

SHEET 4 of 5

FILE NO. 82-0039.02

CASCADE MICROFILM/PRECISION GRAPHICS PORTLAND

NOTE:
TRASH RACK OMITTED FROM INLET STRUCTURE PLAN FOR CLARITY.

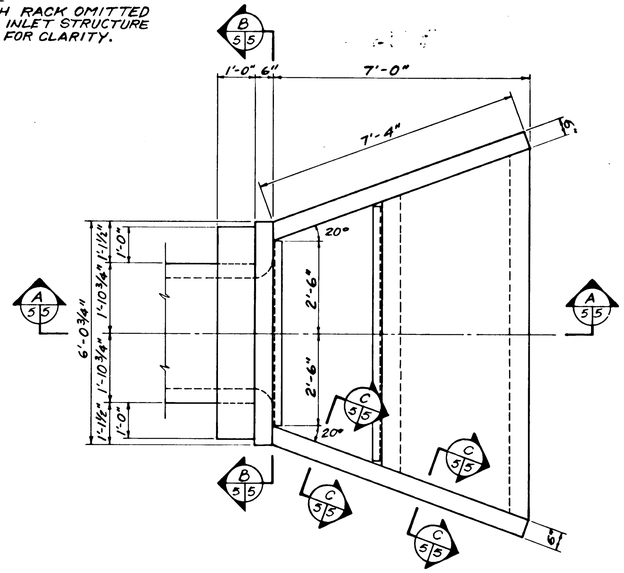

INLET STRUCTURE PLAN
SCALE: 1/2"=1'-0"

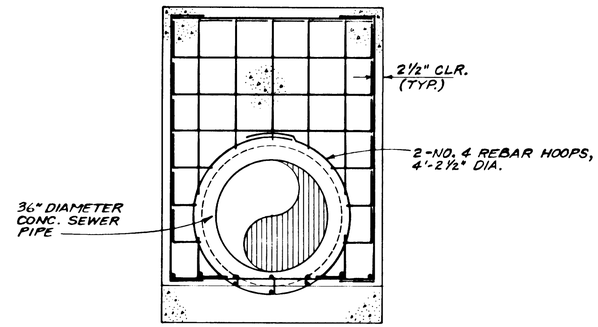

SECTION B/5 5
SCALE: 1/2"=1'-0"

GENERAL NOTES:

1. CONCRETE SHALL ATTAIN A MINIMUM COMPRESSIVE STRENGTH OF 3000 P.S.I. AT 28 DAYS.
2. PROVIDE 3/4" CHAMFER ON ALL EXPOSED CONCRETE EDGES.
3. ALL REINFORCING STEEL SHALL BE NO. 4 BAR AT 12" C.C. EACH WAY UNLESS NOTED OTHERWISE ON THE DRAWINGS.
4. ALL REINFORCING STEEL SHALL CONFORM TO ASTM A615, GRADE 40.
5. MINIMUM COVER OVER ALL REINFORCING STEEL SHALL BE 2-1/2".
6. MINIMUM REBAR LAP DISTANCE SHALL BE 20 TIMES BAR DIAMETER.
7. STRUCTURAL STEEL SHALL CONFORM WITH ASTM A36.
8. TRASH RACK SHALL BE HOT-DIP GALVANIZED AFTER FABRICATION. FIELD VERIFY DIMENSIONS PRIOR TO FABRICATION.

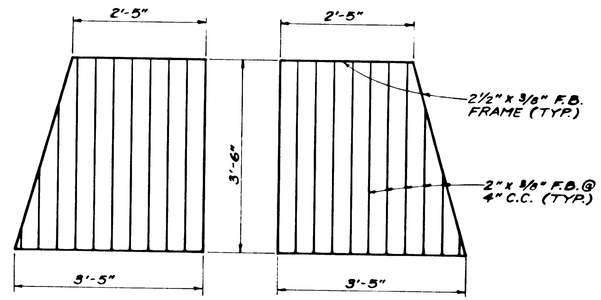

PLAN

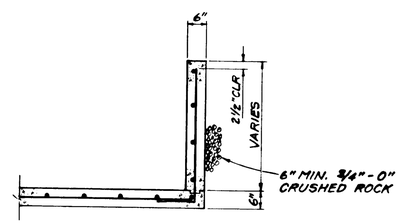

SECTION C/5 5
SCALE: 1/2"=1'-0"

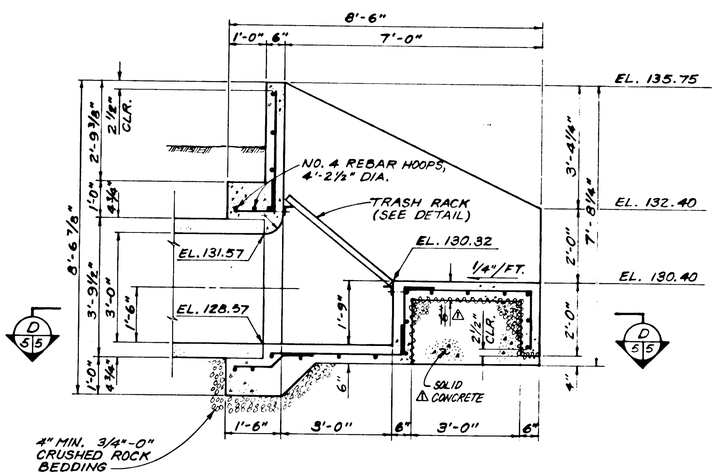

SECTION A/5 5
SCALE: 1/2"=1'-0"

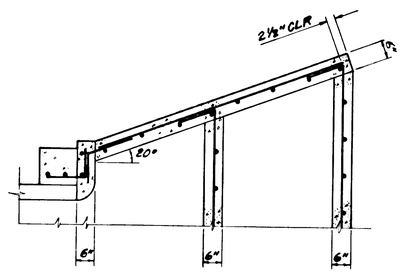

SECTION D/5 5
SCALE: 1/2"=1'-0"

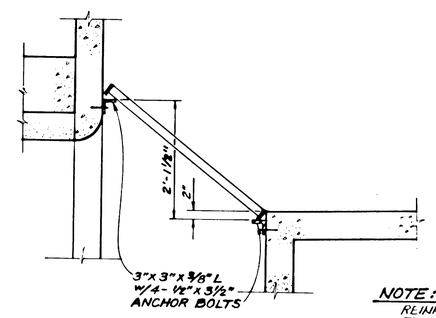

NOTE:
REINFORCING STEEL OMITTED FROM TRASH RACK SECTION FOR CLARITY.

SECTION

TRASH RACK DETAILS
SCALE: 3/4"=1'-0"

REGISTERED PROFESSIONAL ENGINEER 7264 OREGON JULY 13 1973 PHILIP H. SMITH

NO.	REVISION	BY	DATE
1	RECORD DRAWING	RD	2-4-85

CITY OF WEST LINN, OREGON
CEDAROAK DRIVE / KENTHORPE WAY
STORM SEWER

INLET STRUCTURE DETAILS

DESIGNED PHS | DRAWN RFD | CHECKED HRM | SCALE AS SHOWN | DATE JULY, 1984

MURRAY, SMITH & ASSOCIATES
Engineers / Planners
Harrison Square
1800 S.W. First Ave.
Portland, Oregon 97201
503 225-9010

MSA

SHEET
5 of 5
FILE NO.
82-0039.02

CASCADE MICROFILM/PRECISION GRAPHICS PORTLAND