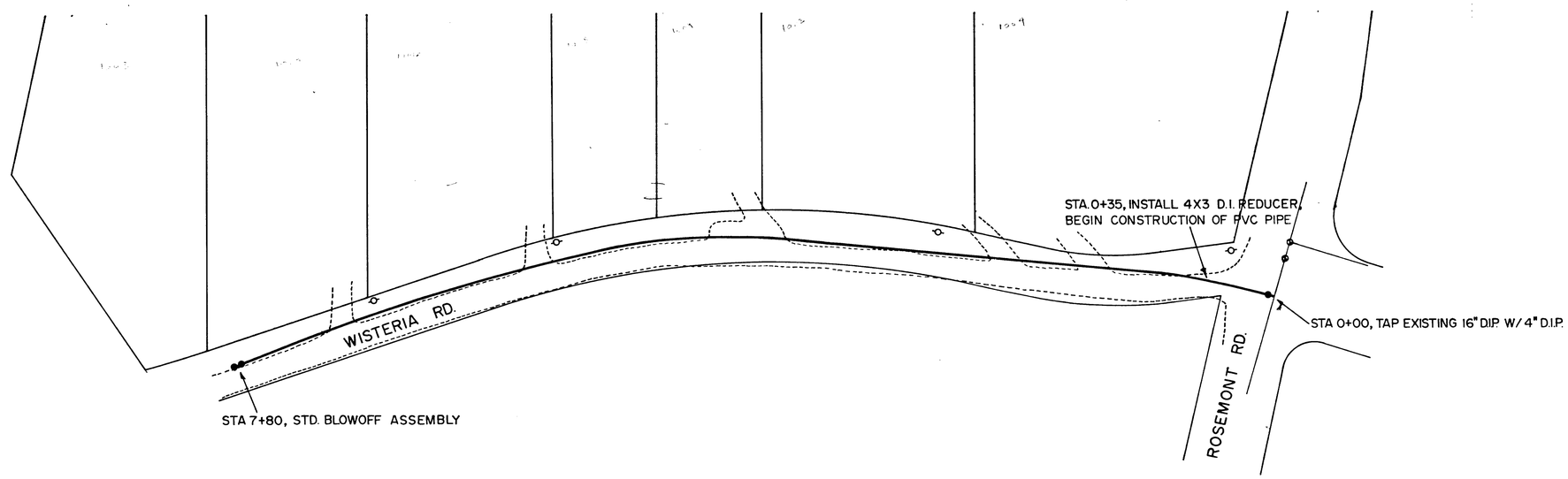

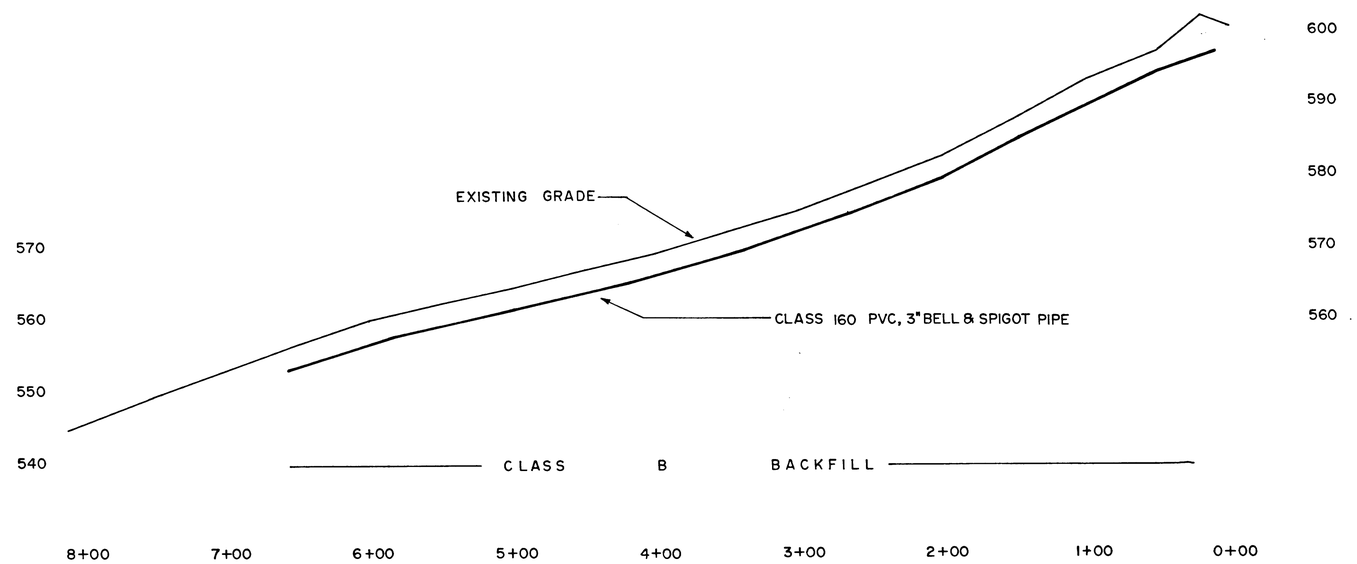

DATE	NO.	REVISION	DRAWN		
			FILE	DATE	
			SC LE		

CITY OF WEST LINN

PUBLIC WORKS DEPARTMENT

WISTERIA DRIVE
WATER IMPROVEMENTS