WILLAMETTE III BUILDING

A COMMERCIAL DEVELOPMENT OF TAX MAP 31E 02BA, TAX LOT 600
CITY OF WEST LINN, OREGON

LEGEND

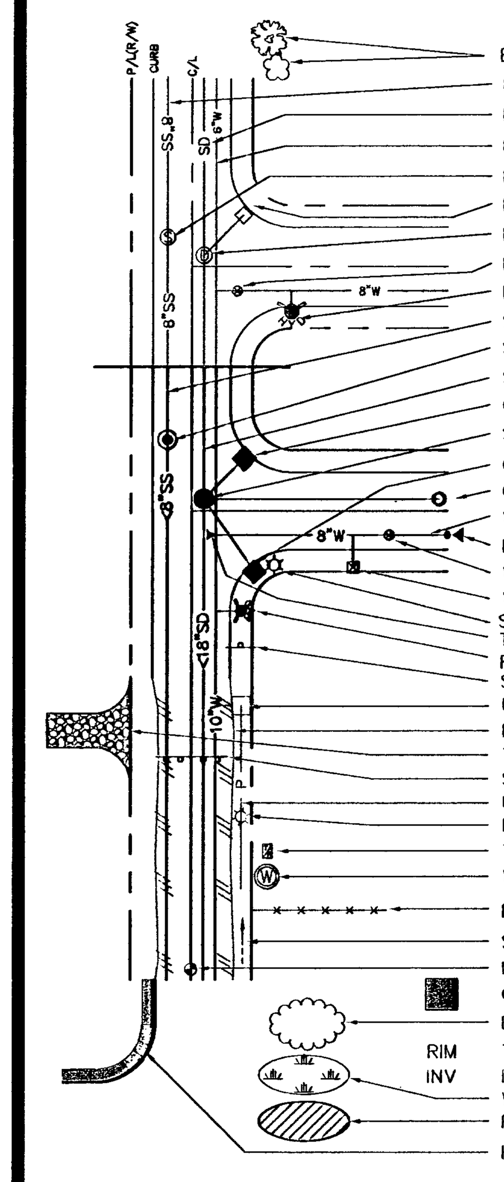

- EXISTING TREE
- EXISTING SANITARY SEWER LINE
- EXISTING STORM DRAIN LINE
- EXISTING WATER LINE
- EXISTING SANITARY SEWER MANHOLE
- EXISTING CATCH BASIN
- EXISTING STORM DRAIN MANHOLE
- EXISTING WATER VALVE
- EXISTING FIRE HYDRANT
- SANITARY SEWER LINE
- SANITARY SEWER MANHOLE
- STORM DRAIN LINE
- CATCH BASIN – CB, OSCB
- STORM DRAIN MANHOLE
- CURB INLET
- CLEANOUT
- WATER LINE
- BLOWOFF
- WATER VALVE
- WATER METER
- STREET LIGHT
- THRUST BLOCK
- FIRE HYDRANT
- SIGN
- UTILITY POLE
- EDGE OF EXISTING PAVEMENT – EP
- TEMPORARY CONSTRUCTION DRIVEWAY
- STREET BARRICADE
- UNDERGROUND ELECTRIC
- EXISTING STREET LIGHT
- TELEPHONE RISER
- WELL – AS NOTED
- FENCE – AS NOTED
- SURFACE STORM WATER DRAINAGE
- MONUMENT BOX
- CONCRETE SURFACE
- BRUSH/TREES
- RIM TOP OF MANHOLE RIM
- INV INVERT OF SEWERLINE
- WETLANDS
- ROCK OUTCROPPING
- HANDICAP RAMP & SIDEWALK

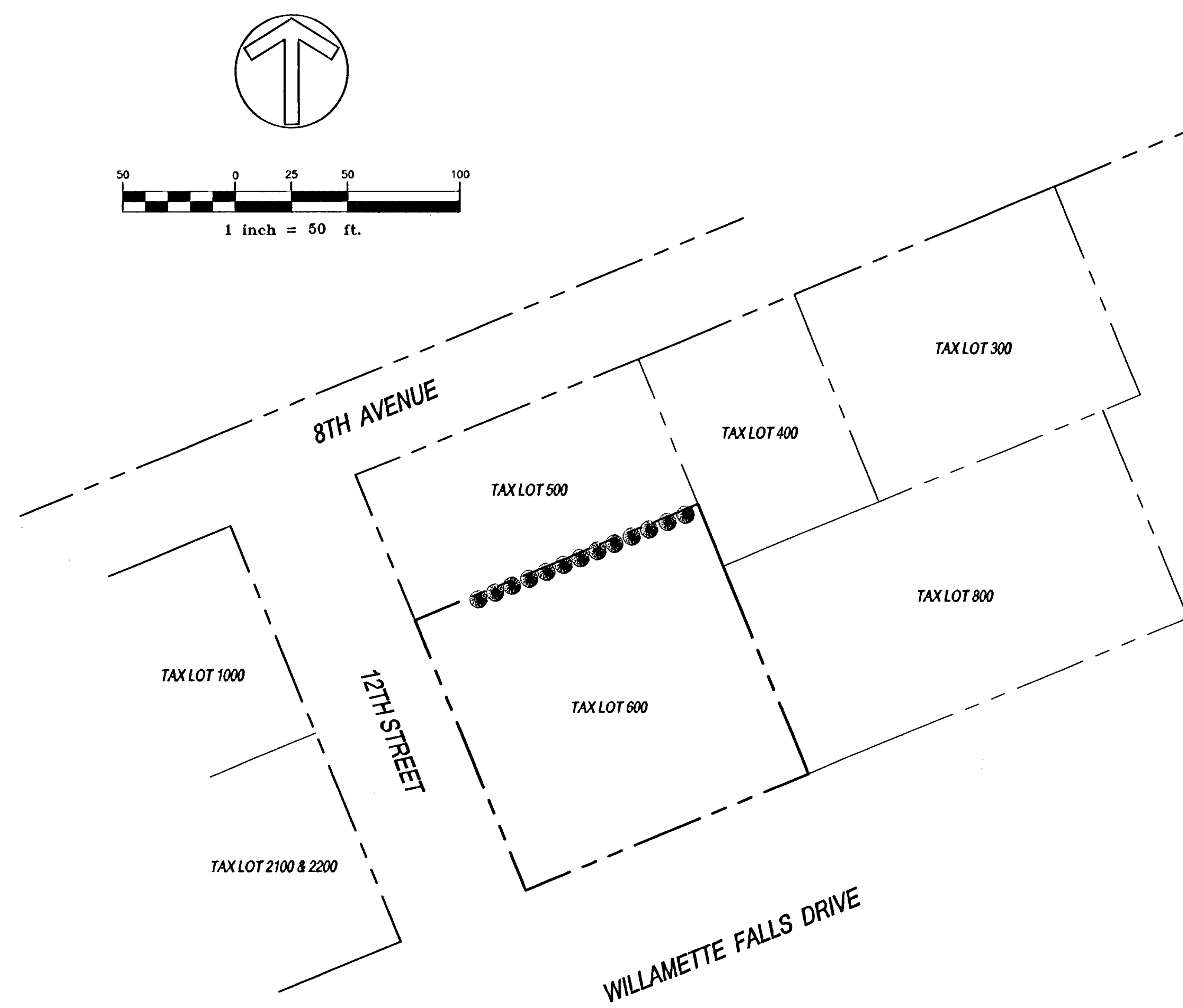

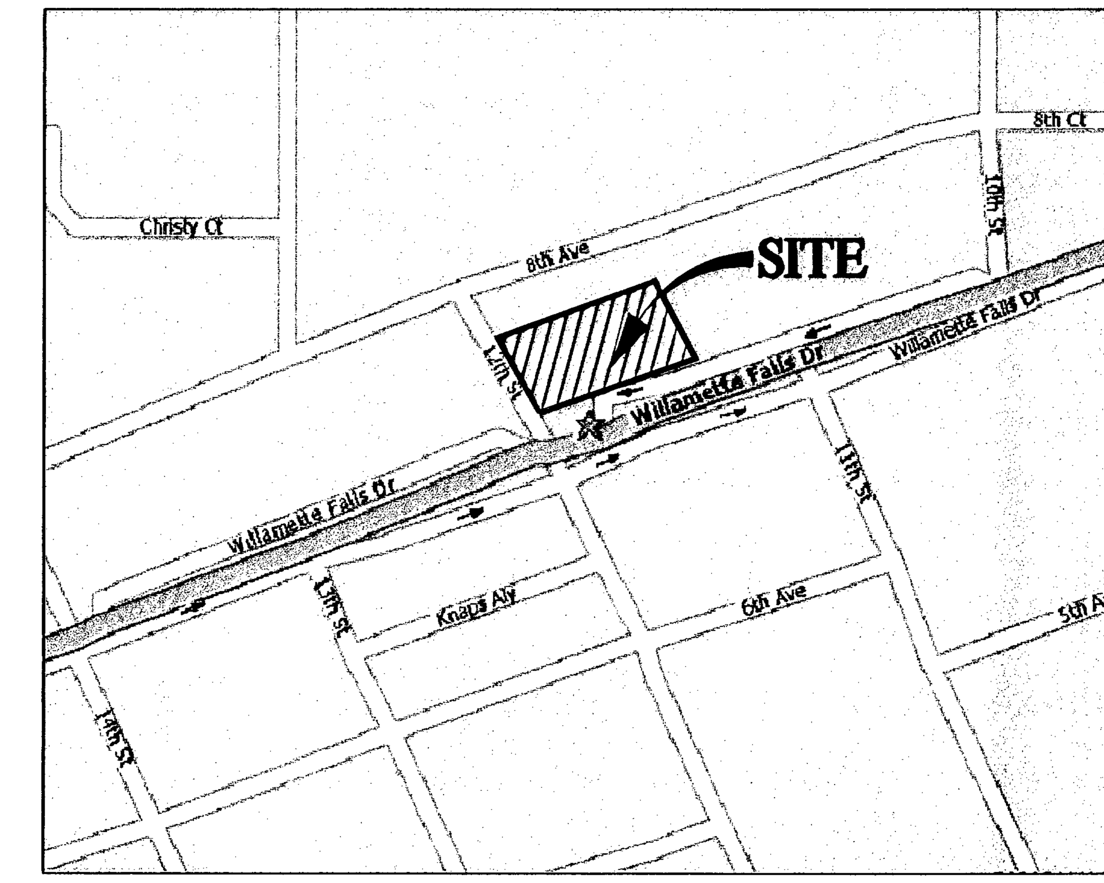

VICINITY MAP
N.T.S.

ABBREVIATIONS

AC	ASPHALT CONCRETE	PC	POINT OF CURVATURE
ACP	ASBESTOS CEMENT PIPE	PCC	POINT OF COMPOUND CURVATURE
AB	AGGREGATE BASE	PI	POINT OF INTERSECTION
BCR	BEGIN CURB RETURN	ℙ	PROPERTY LINE
BM	BENCH MARK	PRC	POINT OF REVERSE CURVATURE
BVC	BEGIN VERTICAL CURVE	PT	POINT OF TANGENCY
CIP	CAST IRON PIPE	PVC	POLY-VINYL CHLORIDE
CJ	CONTROL JOINT	R	RADIUS
CL	CLASS	RCP	REINFORCED CONCRETE PIPE
℄	CENTERLINE	R/W	RIGHT-OF-WAY
CMP	CORRUGATED METAL PIPE	S	SEWER
CMU	CONCRETE MASONARY UNIT	SD	STORM DRAIN
CO	CLEANOUT	SL	SEWER LATERAL
CTV	CABLE TELEVISION	STA	STATION
DI	DROP INLET	STD. DTL.	STANDARD DETAIL
DIP	DUCTILE IRON PIPE	T	TELEPHONE
E	ELECTRICAL	TB	THRUST BLOCK
ECR	END CURB RETURN	TC	TOP OF CURB
EJ	EXPANSION JOINT	TCN	TOP OF CONCRETE
EL	ELEVATION	TD	TOP OF DIKE
EVC	END VERTICAL CURVE	TF	TOP OF FOOTING
EX	EXISTING	TG	TOP OF GRATE
FF	FINISH FLOOR	TI	TRAFFIC INDEX
FG	FINISH GRADE	TL	TRAFFIC LIGHT
FH	FIRE HYDRANT	TP	TOP OF PAVEMENT
FL	FLOWLINE	TYP.	TYPICAL
FLG	FLANGE	TW	TOP OF WALL
G	GAS	VCP	VITRIFIED CLAY PIPE
GM	GAS METER	VPI	VERTICAL POINT OF INTERSECTION
GB	GRADE BREAK	W	WATER
GSP	GALVANIZED STEEL PIPE	WM	WATER METER
HP	HIGH POINT	WV	WATER VALVE
L	CURVE LENGTH	Δ	DELTA (CURVE CENTRAL ANGLE)
LF	LINEAL FEET	±	APPROXIMATELY
MH	MANHOLE	%	PERCENT
MJ	MECHANICAL JOINT	<	LESS THAN
N.I.C.	NOT INCLUDED IN CONTRACT	>	GREATER THAN
OCEW	ON CENTER EACH WAY		

IMPERVIOUS AREA

ONSITE	= 15,777 SF
OFFSITE	= 1,134 SF
TOTAL NEW IMPERVIOUS	= 16,911 SF

DISTURBED AREA

TOTAL SITE AREA	= 0.41 Ac.
ONSITE DISTURBED AREA	= 0.41 Ac.
OFFSITE DISTURBED AREA	= 0.04 Ac.
TOTAL DISTURBED AREA	= 0.45 Ac.

UTILITY COMPANIES

WATER	-	CITY OF WEST LINN
SEWER	-	CITY OF WEST LINN
STORM	-	CITY OF WEST LINN
GAS	-	NORTHWEST NATURAL GAS
ELECTRIC	-	PORTLAND GENERAL ELECTRIC
TELEPHONE	-	QWEST
CABLE TV	-	COMCAST

07/03/2007 15:10 5036564106 CITY OF WEST LINN PAGE 01/02

105-024 CONDITIONS
To: Darren Hyde 503-643-7905
From: Boris Piatek 503 722-5519

FINAL DECISION NOTICE
FILE NO. DR-06-46

IN THE MATTER OF A HISTORIC DISTRICT DESIGN REVIEW TO CONSTRUCT A TWO-STORY 19,425 SQUARE FOOT OFFICE AND RETAIL BUILDING IN THE WILLAMETTE FALLS DRIVE OVERLAY ZONE AT 1914 WILLAMETTE FALLS DRIVE

At their meeting of April 18, 2007, the Clackamas County Historic Review Board (HRB) held a public hearing to consider the request by Icon Construction/Mark Handris to construct a two-story 19,425 square foot office/retail building in the Willamette Falls Historic District Overlay Zone. The decision was based upon the approval criteria of Chapter 25 of the West Linn Community Development Code (CDC). The hearing was conducted pursuant to the provisions of CDC Chapter 99.

Staff made a brief presentation. The applicant provided comments. The public hearing was opened. There was no public testimony. The public hearing was closed.

In discussion, all HRB members stated concern about the circles/cutouts at the top of the false gable end. The HRB found that awnings should be seven feet deep. Staff expressed concern about the lack of verticality in some of the elements. The applicant proposed landscaping at the corner entrance and concrete wainscoting for enhanced product life.

A motion was made, seconded and unanimously approved to approve the application as submitted with the following conditions:

1. The applicant shall mitigate noise and glare through construction of a six-foot high solid wood fence along the rear property line.
2. The applicant shall mitigate for tree removal along the rear lot line on a one-inch to one-inch basis. Mitigation may be off site with City Arborist approval.
3. All HVACs shall be visually screened and acoustically muffled per the Altermatt Associate study.
4. No off-site glare is permitted. Security lighting shall not direct glare off-site. Property frontage lighting shall be provided per city standards.
5. Sidewalk width will need to be increased on 11th (typo) to eight feet per CDC 85.200 (page 85-23).
   - No half-street improvements required on Willamette Falls Drive frontage.
   - Half street and travel lane improvements required on 11th St frontage. Improvements likely to include curb, gutter, sidewalk, street trees and storm drainage improvements.

   (street should be 12th)
6. For more than 5,000 SF new impervious area, treatment and detention required. This may be an underground system. Connection to stormwater system Willamette Falls Drive along frontage

07/03/2007 15:10 5036564106 CITY OF WEST LINN PAGE 02/02

7. Undergrounding of overhead utilities required along both Willamette Falls Drive and 11th St frontages.
8. The applicant shall achieve lineal transparency of 80% per code for the south elevation.
9. Individual sign permits for tenants shall require sign design and mounting per code with no sign hanging down or suspended over the sidewalk. A consistent pattern of signage is recommended.
10. Applicant shall meet all City Engineering and Planning standards.
11. Landscaping at the corner/beveled entrance is permitted. The landscape plan shall show plant material for those planter areas with approval required by the Planning Director.
12. Awnings shall extend outwards at least seven feet from the building elevation.
13. The design shall eliminate the circle at the top of the gable end.
14. The applicant shall submit a color scheme that creates greater verticality and a greater break up of the building into smaller sub-elements.
15. Concrete wainscoting shall be allowed.
16. A consistent sign plan shall be submitted identifying where the signs will go.

This decision will become effective 14 days from the date of mailing of this final decision as identified below. Those parties with standing (i.e., those individuals who submitted letters into the record, or provided oral or written testimony during the course of the hearing, or signed in on the attendance sheet at the hearing, or who have contacted City Planning staff and made their identities known to staff) may appeal this decision to the West Linn City Council within 14 days of the mailing of this decision pursuant to the provisions of Chapter 99 of the Community Development Code. Such appeals would require payment of fee and a completed appeal application form together with the specific grounds for appeal to the Planning Director prior to the appeal-filing deadline.

PETER SPIR, ASSOCIATE PLANNER — DATE 4-25-07
CITY OF WEST LINN

Mailed this 25 day of April, 2007.

Therefore, this decision becomes final at 5 p.m., May 9, 2007.

p:devrvw\final decisions\fin dec.DR-06-46-HANDRIS-OFFICE-HRB

LOCATES (48 HOURS NOTICE REQUIRED)

ONE CALL SYSTEM (GENERAL TELEPHONE, NORTHWEST NATURAL GAS, PORTLAND GENERAL ELECTRIC) – 246-6699

CALL BEFORE YOU DIG 800-332-2344

REPAIR EMERGENCIES

CITY OF WEST LINN	– 503-656-6081, 503-635-0238
NORTHWEST NATURAL GAS	– 800-882-3377
PORTLAND GENERAL ELECTRIC	– 503-464-7750
QWEST	– 503-242-6064
COMCAST	– 888-824-8264
VERIZON	– 800-483-4000

THE CONTRACTOR, IN LOCATION AND PROTECTING UNDERGROUND UTILITIES, MUST COMPLY WITH THE REGULATIONS OF O.R.S. 757.541 TO 757.571.

SHEET INDEX

1. COVER SHEET
2. EXISTING CONDITIONS AND DEMOLITION PLAN
3. GRADING & EROSION CONTROL PLAN
4. SITE PLAN
5. UTILITY PLAN
6. UTILITY PLAN
7. UTILITY PROFILE
8. DETAILS

OWNER/APPLICANT:

ICON CONSTRUCTION AND DEVELOPMENT, LLC
2008 WILLAMETTE FALLS DR., SUITE B
WEST LINN, OR
PH. (503) 657-0406
CONTACT: MARK HANDRIS

SURVEYOR:

GAYLORD LAND SURVEYING, INC.
2910 S.E. OAK GROVE BLVD.
MILWAUKIE, OR 97267
PH. (503) 654-1492
CONTACT: PAT GAYLORD

PLANNING / ENGINEERING:

SFA DESIGN GROUP, LLC.
9020 SW WASHINGTON SQUARE RD., SUITE 350
PORTLAND, OR 97223
PH. (503) 641-8311
FAX (503) 643-7905
CONTACT: MATT SPRAGUE / BRENT FITCH

BENCHMARK:

CITY OF WEST LINN BENCHMARK "WL116"

SMALL BRASS DISK LOCATED AT THE SE CORNER OF 16TH STREET AND WILLAMETTE FALLS DRIVE.

ELEVATION=216.17'

AS-BUILT
DATE 10/24/08

SFA Design Group, LLC
STRUCTURAL | CIVIL | LAND USE PLANNING
9020 SW Washington Square Dr. Suite 350
Portland, Oregon 97223
p: (503) 641-8311 f: (503) 643-7905
sfadesigngroup.com

COVER SHEET
WILLAMETTE III BLDG, WILLAMETTE FALLS DR.
CITY OF WEST LINN, OREGON

REGISTERED PROFESSIONAL ENGINEER 54627PE OREGON MAR. 12, 2002 BRENT E. FITCH
VALID THROUGH 12-31-09
6/29/09

NO.	DATE	REVISION	BY
0	7/6/07	SUBMITTED FOR 1ST REVIEW	DPM
1	9/12/07	SUBMITTED FOR 2ND REVIEW	LRL
2	10/24/07	SUBMITTED FOR APPROVAL	LRL
3	11/20/07	REV. PER FIELD MTG W/CITY	LRL
4	1/23/08	FINAL APPROVAL	LRL
5	4/8/08	FIELD MODIFICATIONS	KHM
6	6/3/08	STORM PIPE FROM MH# 3-4	LRL

DESIGNED BY BEF DATE 7/07
DRAWN BY DPM DATE 7/07
REVIEWED BY BEF DATE 7/07
PROJECT NO. 105-024 REF.
SCALE NO SCALE
N/A
10524-01covr.dwg

SHEET 1 OF 8

PROJECT WILLAMETTE III BLDG
NO. 105-024
TYPE ENGINEERING

JKomp, Plotted: Jun 29, 2009 – 8:32am, B:\Land Projects 2004\105-024\dwg\Engineering\As-Built\10524-01covr.dwg

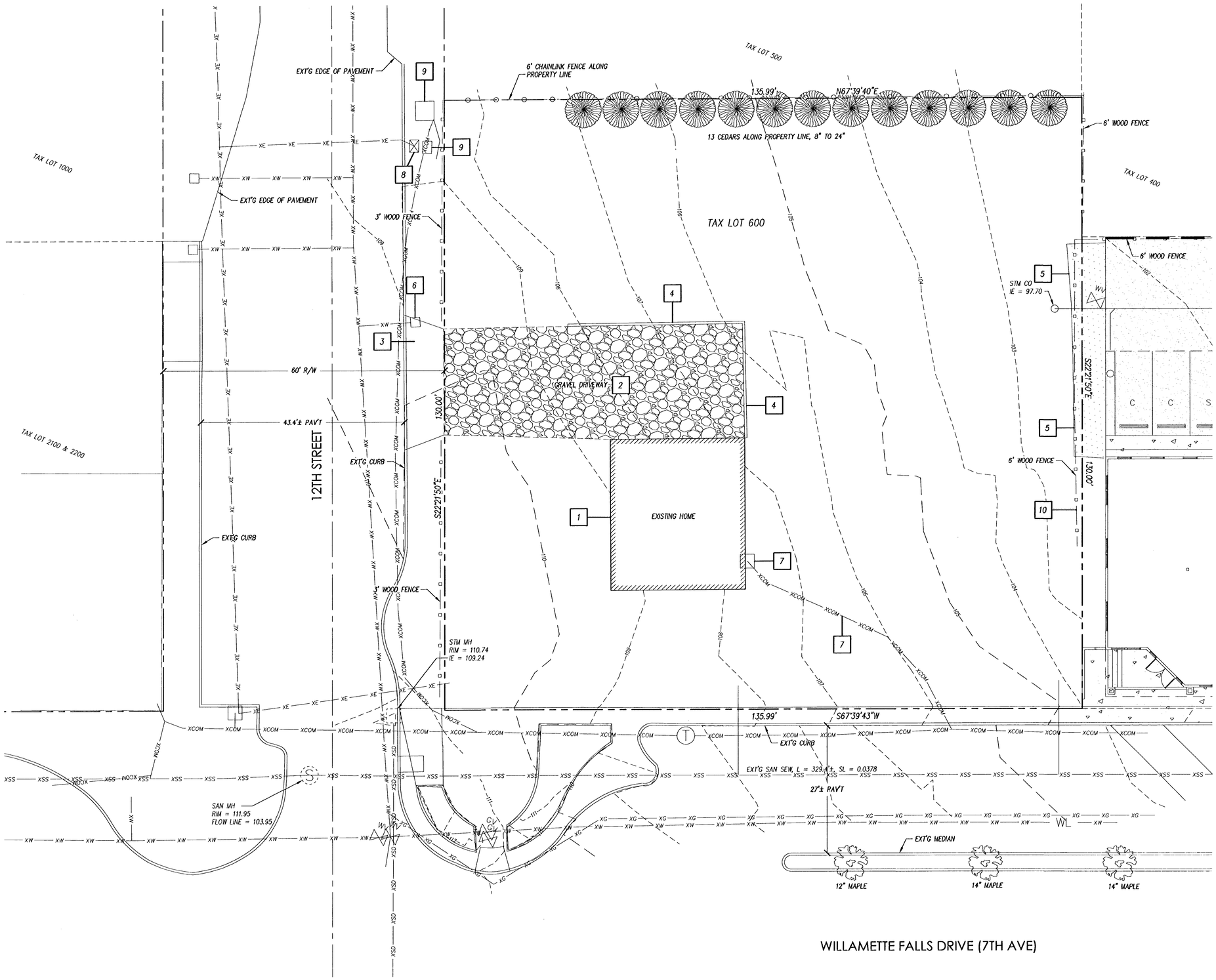

0' 10' 20'
SCALE IN FEET

EXISTING FEATURES LEGEND

- CENTERLINE
- PROPERTY LINE
- 5' CONTOUR LINE
- 1' CONTOUR LINE
- EXISTING CURB
- EXISTING EDGE OF PAVEMENT
- EXISTING STORM LINE
- EXISTING SANITARY LINE
- EXISTING WATER LINE
- EXISTING GAS LINE
- EXISTING COMMUNICATIONS LINE
- EXISTING UNDERGROUND ELECTRICAL LINE

DEMOLITION NOTES

1. BUILDING TO BE DEMOLISHED
2. GRAVEL DRIVEWAY TO BE REMOVED
3. DRIVEWAY APPROACH TO BE DEMOLISHED, REPAIR SIDEWALK & CURB AS NECESSARY.
4. WALL TO BE DEMOLISHED
5. ON-SITE ASPHALT TO BE REMOVED
6. WATER METER TO BE REMOVED AND ABANDONED AT MAINLINE.
7. COMMUNICATIONS LINE & STRUCTURE TO BE DEMOLISHED
8. ELECTRICAL PEDESTAL & CONCRETE PAD TO BE PROTECTED
9. COMMUNICATIONS PEDESTAL & CONCRETE PAD TO BE PROTECTED
10. FENCE TO BE REMOVED, CO-ORDINATE DEMOLITION WITH NEIGHBORS.

AS-BUILT
DATE 10/24/08

SFA Design Group, LLC
STRUCTURAL | CIVIL | LAND USE PLANNING
9020 SW Washington Square Dr. Suite 350
Portland, Oregon 97223
p: (503) 641-8311 f: (503) 643-7905
sfadesigngroup.com

EXISTING CONDITIONS AND DEMOLITION PLAN

WILLAMETTE III BLDG, WILLAMETTE FALLS DR.
CITY OF WEST LINN, OREGON

REGISTERED PROFESSIONAL ENGINEER
OREGON
MAR. 12, 2002
BRENT E. FITCH
VALID THROUGH 12-31-09

NO.	DATE	REVISION	BY
0	7/6/07	SUBMITTED FOR 1ST REVIEW	DPM
1	9/12/07	SUBMITTED FOR 2ND REVIEW	LRL
2	10/24/07	SUBMITTED FOR APPROVAL	LRL
3	11/20/07	REV. PER FIELD MTG W/CITY	LRL
4	1/23/08	FINAL APPROVAL	LRL
5	4/8/08	FIELD MODIFICATIONS	KHM
6	6/3/08	STORM PIPE FROM MH# 3-4	LRL

DESIGNED BY BEF DATE 7/07
DRAWN BY DPM DATE 7/07
REVIEWED BY BEF DATE 7/07
PROJECT NO. 105-024 REF.
SCALE 1"=10'
N/A
10524-02xcon.dwg

SHEET 2 OF 8

PROJECT WILLAMETTE III BLDG
NO. 105-024
TYPE ENGINEERING

JKomp, Plotted: Jun 29, 2009 - 8:33am, B:\Land Projects 2004\105-024\dwg\Engineering\As-Built\10524-02xcon.dwg

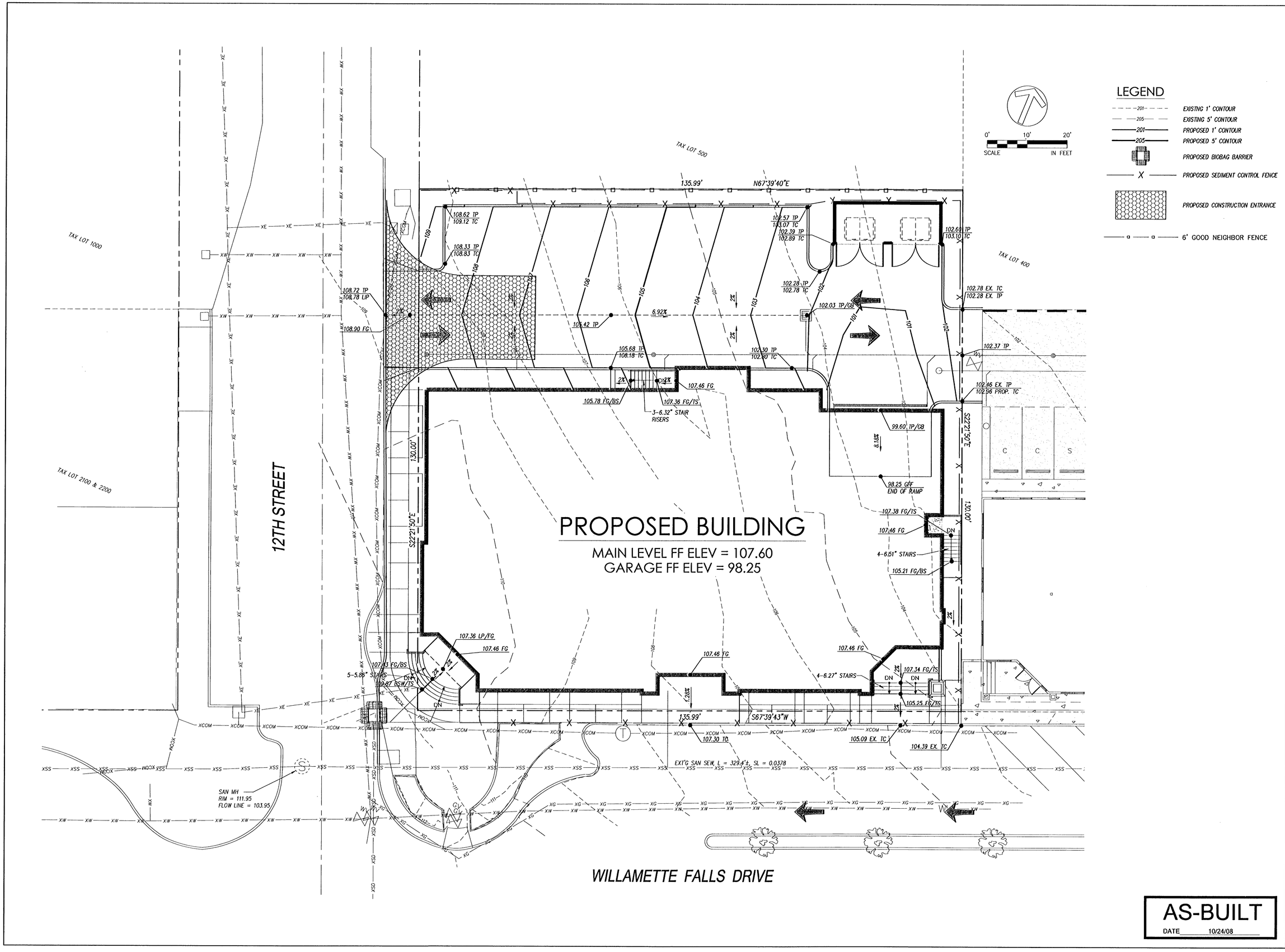

AS-BUILT

DATE 10/24/08

SFA Design Group, LLC
STRUCTURAL | CIVIL | LAND USE PLANNING
9020 SW Washington Square Dr. Suite 350
Portland, Oregon 97223
p: (503) 641-8311 f: (503) 643-7905
sfadesigngroup.com

GRADING AND EROSION CONTROL PLAN

WILLAMETTE III BLDG, WILLAMETTE FALLS DR.
CITY OF WEST LINN, OREGON

REGISTERED PROFESSIONAL ENGINEER 54627PE OREGON MAR. 12, 2002 BRENT E. FITCH

VALID THROUGH 12-31-09

NO.	DATE	REVISION	BY
0	7/6/07	SUBMITTED FOR 1ST REVIEW	DPM
1	9/12/07	SUBMITTED FOR 2ND REVIEW	LRL
2	10/24/07	SUBMITTED FOR APPROVAL	LRL
3	11/20/07	REV. PER FIELD MTG W/CITY	LRL
4	1/23/08	FINAL APPROVAL	LRL
5	4/8/08	FIELD MODIFICATIONS	KHM
6	6/3/08	STORM PIPE FROM MH# 3-4	LRL

DESIGNED BY BEF DATE 7/07
DRAWN BY DPM DATE 7/07
REVIEWED BY BEF DATE 7/07
PROJECT NO. 105-024 REF.
SCALE 1"=10'
N/A
10524-03grad.dwg

SHEET 3 OF 8

PROJECT WILLAMETTE III BLDG
NO. 105-024
TYPE ENGINEERING

JKomp, Plotted: Jun 29, 2009 - 8:34am, B:\Land Projects 2004\105-024\dwg\Engineering\As-Built\10524-03grad.dwg

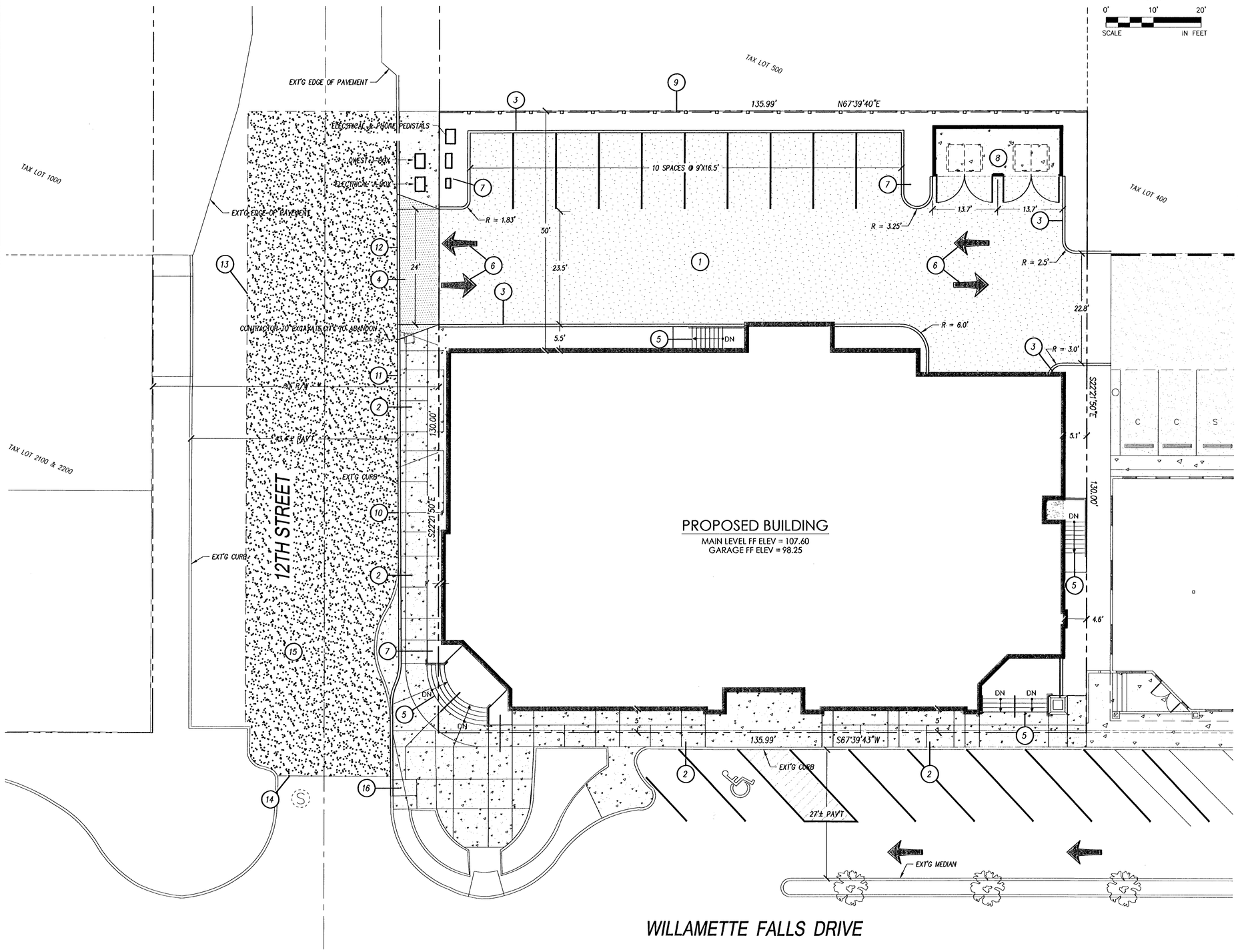

SITE LEGEND

- CENTERLINE
- PROPERTY LINE
- PROPOSED STANDARD VERTICAL CONCRETE CURB
- PROPOSED A.C. PAVEMENT
- PROPOSED CONCRETE PAD
- PROPOSED CONCRETE SIDEWALK
- PROPOSED BUILDING
- DIRECTIONAL ARROWS
- PROPOSED SIGN
- PROPOSED CONCRETE PAD
- EXISTING CURB
- EXISTING EDGE OF PAVEMENT
- 6' SOLID WOOD FENCE

CONSTRUCTION NOTES

1. STANDARD DUTY A.C. PAVEMENT
2. CONCRETE SIDEWALK (TYP.)
3. STANDARD CONCRETE VERTICAL CURB, (TYP.)
4. COMMERCIAL DRIVEWAY APPROACH
5. INSTALL RISERS, SEE ARCHITECTURAL DRAWINGS FOR HANDRAIL INSTALLATION AND DETAIL.
6. DIRECTIONAL ARROW
7. NEW LANDSCAPING W/ IRRIGATION AS REQUIRED
8. TRASH ENCLOSURE
9. 6' SOLID WOOD FENCE
10. INSTALL NEW CURB AND GUTTER
11. INSTALL PROPOSED CURB ACROSS EXISTING DRIVEWAY
12. REMOVE EXISTING CURB
13. SAWCUT EXISTING PAVEMENT. SAWCUT LINE TO MATCH EXISTING EDGE OF PREVIOUSLY OVERLAYED PARKING AREA.
14. NEW PAVEMENT SECTION FOR 12TH STREET SHALL BE 4" AC/2" (3/4"-0") ROCK/8" (1 1/2"-0") BASE ROCK.
15. CONTRACTOR TO REPLACE PAVEMENT. FILL WITH 8" (1 1/2"-0") BASE ROCK, 2" (¾"-0") LEVELING COURSE AND 4" ASPHALT PAVEMENT.
16. INSTALL ADA RAMP PER CITY STANDARDS AND DETAILS.

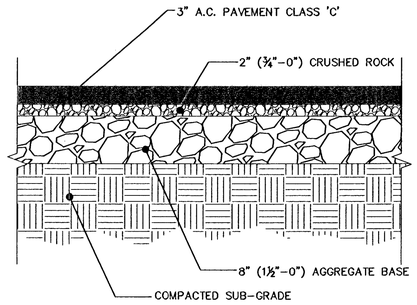

NOTES:

1. REFER TO GEOTECHNICAL REPORT FOR FINAL PAVEMENT DESIGN.

TYPICAL ON-SITE PAVEMENT SECTION

SCALE: NTS

AS-BUILT

DATE 10/24/08

SFA Design Group, LLC
STRUCTURAL | CIVIL | LAND USE PLANNING
9020 SW Washington Square Dr. Suite 350
Portland, Oregon 97223
p: (503) 641-8311 f: (503) 643-7905
sfadesigngroup.com

SITE PLAN

WILLAMETTE III BLDG, WILLAMETTE FALLS DR.
CITY OF WEST LINN, OREGON

REGISTERED PROFESSIONAL ENGINEER 54527PE OREGON MAR. 12, 2002 BRENT E. FITCH

VALID THROUGH 12-31-09

NO.	DATE	REVISION	BY
0	7/6/07	SUBMITTED FOR 1ST REVIEW	DPM
1	9/12/07	SUBMITTED FOR 2ND REVIEW	LRL
2	10/24/07	SUBMITTED FOR APPROVAL	LRL
3	11/20/07	REV. PER FIELD MTG W/CITY	LRL
4	1/23/08	FINAL APPROVAL	LRL
5	4/8/08	FIELD MODIFICATIONS	KHM
6	6/3/08	STORM PIPE FROM MH# 3-4	LRL

DESIGNED BY BEF DATE 7/07
DRAWN BY DPM DATE 7/07
REVIEWED BY BEF DATE 7/07
PROJECT NO. 105-024 REF. ____
SCALE 1"=10'
N/A
10524-04site.dwg

SHEET 4 OF 8

PROJECT WILLAMETTE III BLDG
NO. 105-024
TYPE ENGINEERING

JKomp, Plotted: Jun 29, 2009 - 8:35am, B:\Land Projects 2004\105-024\dwg\Engineering\As-Built\10524-04site.dwg

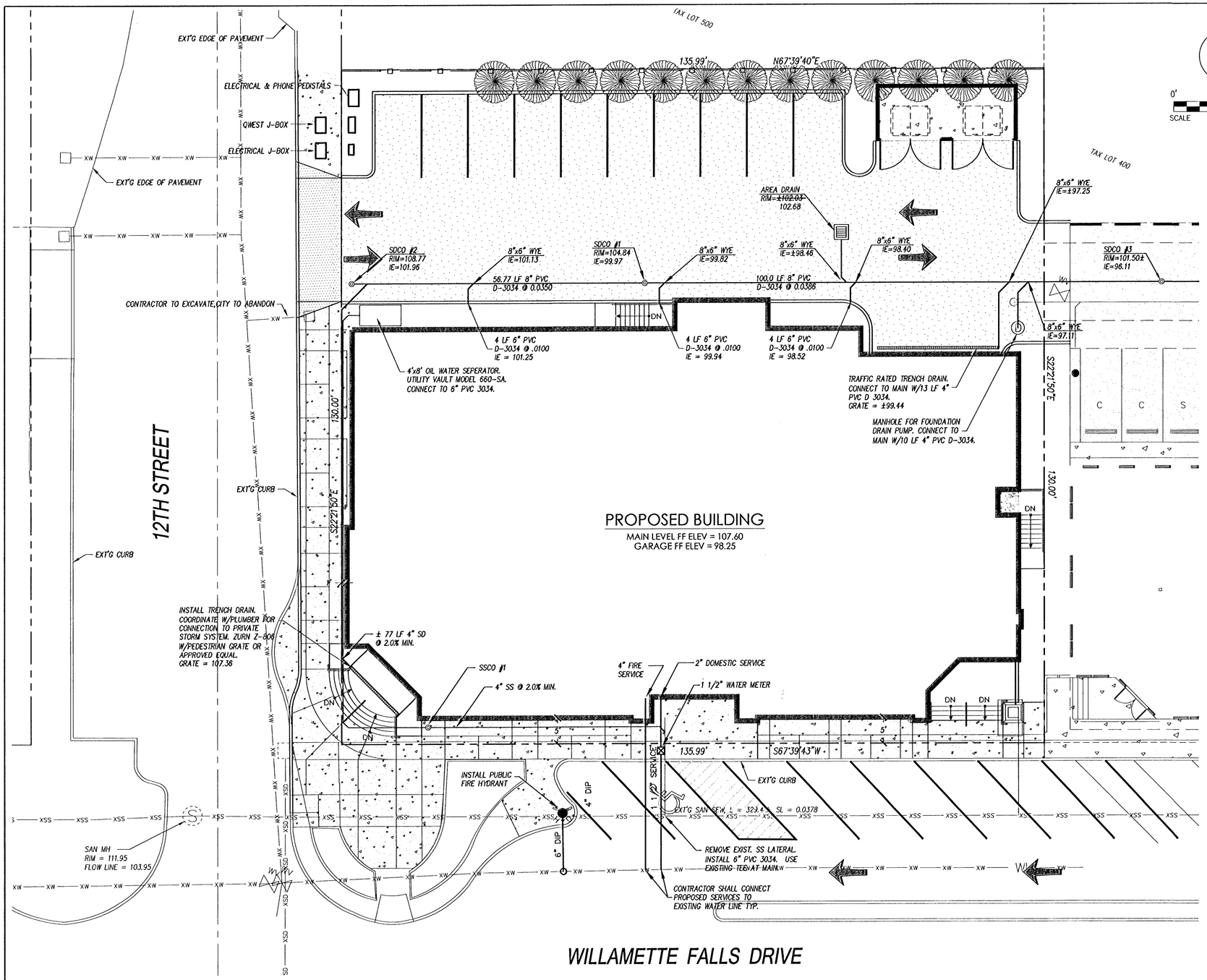

0' 10' 20'
SCALE IN FEET

SITE LEGEND

- CENTERLINE
- PROPERTY LINE
- PROPOSED STANDARD VERTICAL CONCRETE CURB
- PROPOSED A.C. PAVEMENT
- PROPOSED CONCRETE PAD
- PROPOSED CONCRETE SIDEWALK
- PROPOSED BUILDING
- DIRECTIONAL ARROWS
- PROPOSED SIGN
- EXISTING PAVEMENT
- EXISTING CURB
- EXISTING EDGE OF PAVEMENT
- 6' GOOD NEIGHBOR FENCE

Project 105-024
Willamette Falls Commercial 3

RUNOFF by the SANTA BARBARA URBAN HYDROGRAPH

total Time of Concentration = 5.0'

storm hyetograph: SCS TypeIA
return period = 100 years
storm duration = 24 hr.
total rainfall = 4.40 in.

pervious area = 0.00 A CN = 86 Bldg/Pavement
impervious area = 0.41 A CN = 98
total site area = 0.41 A

peak flow = 0.47cfs @ 7.83 hr.
runoff volume = 6,198 cu.ft.

1 PUMP CALC FOR GARAGE
SCALE: N/A

AS-BUILT
DATE 10/24/08

SFA Design Group, LLC
STRUCTURAL | CIVIL | LAND USE PLANNING
9020 SW Washington Square Dr. Suite 350
Portland, Oregon 97223
p: (503) 641-8311 f: (503) 643-7905
sfadesigngroup.com

UTILITY PLAN
WILLAMETTE III BLDG, WILLAMETTE FALLS DR.
CITY OF WEST LINN, OREGON

REGISTERED PROFESSIONAL ENGINEER
OREGON
MAR. 12, 1982
BRENT E. FOLTZ
VALID THROUGH 12-31-09

NO.	DATE	REVISION	BY
0	7/6/07	SUBMITTED FOR 1ST REVIEW	DPM
1	9/12/07	SUBMITTED FOR 2ND REVIEW	LRL
2	10/24/07	SUBMITTED FOR APPROVAL	LRL
3	11/20/07	REV. PER FIELD MTG W/CITY	LRL
4	1/23/08	FINAL APPROVAL	LRL
5	4/8/08	FIELD MODIFICATIONS	KHM
6	6/3/08	STORM PIPE FROM MH# 3-4	LRL

DESIGNED BY BEF DATE 7/07
DRAWN BY DPM DATE 7/07
REVIEWED BY BEF DATE 7/07
PROJECT NO. 105-024 REF.
SCALE 1"=10' N/A
10524-05sbl.dwg

SHEET 5 OF 8

PROJECT WILLAMETTE III BLDG
NO. 105-024
TYPE ENGINEERING

sKemp, Plotted: Jun 29, 2009 - 8:36am, B:\Land Projects 2004\105-024\dwg\Engineering\As-Built\10524-05sbl.dwg

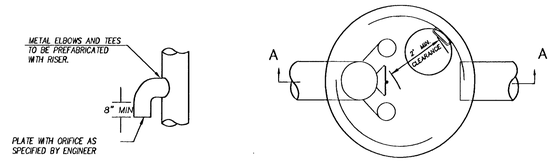

ELBOW DETAIL

PLAN VIEW

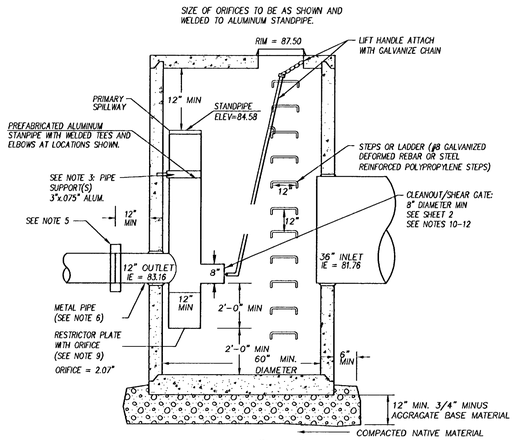

SECTION "A–A"

FLOW CONTROL MH NOTES

1. EXCEPT AS SHOWN OR NOTED, UNITS SHALL BE CONSTRUCTED IN ACCORDANCE WITH THE STANDARD SPECIFICATIONS FOR PUBLIC WORKS CONSTRUCTION.
2. FLAT TOP SHALL BE H–20 LOAD RATED WITH COVER.
3. PIPE SUPPORTS AND RESTRICTOR/SEPARATOR SHALL BE OF THE SAME MATERIAL, AND BE ANCHORED AT 3' MAX SPACING BY 5/8" DIA. STAINLESS STEEL EXPANSION BOLTS OR EMBEDDED 2" IN WALL.
4. THE RESTRICTOR/SEPARATOR SHALL BE FABRICATED FROM .060" (MM) ALUMINUM, IN ACCORDANCE WITH THE APPLICABLE SECTIONS OF AASHTO M 36, M 196, M197, AND M 274.
5. OUTLET SHALL BE CONNECTED TO CULVERT OR STORM PIPE WITH A STANDARD COUPLING BAND FOR CORRUGATED METAL PIPE, OR GROUTED INTO THE BELL OF CONCRETE PIPE.
6. THE VERTICAL RISER STEM OF THE R ESTRICTOR/SEPARATOR SHALL BE THE SAME DIAMETER AS THE HORIZONTAL OUTLET PIPE, WITH A 12" MINIMUM DIAMETER.
7. FRAME AND LADDER OR STEPS ARE TO BE OFFSET SO THAT:
   A. CLEANOUT GATE IS VISIBLE FROM TOP.
   B. CLIMB–DOWN SPACE IS CLEAR OF RISER AND GATE.
   C. FRAME IS CLEAR OF CURB (IF ANY EXISTS).
8. MULTI–ORIFICE ELBOWS MAY BE LOCATED AS SHOWN OR ALL ON ONE SIDE OF RISER TO ASSURE LADDER CLEARANCE. SIZE OF ELBOWS AND PLACEMENT TO BE DETERMINED BY THE ENGINEER.
9. RESTRICTOR PLATE WITH ORIFICE AS SPECIFIED IN THE CONTRACT PLANS. SPECIFIED OPENING TO BE CUT ROUND AND SMOOTH.
10. CLEANOUT/SHEAR GATE: ALUMINUM ALLOY PER ASTM B–26–ZG–32a OR CAST IRON ASTM A48 CLASS 30B AS REQUIRED. LIFT HANDLE EITHER SOLID OR TUBING WITH ADJUSTABLE HOOK AS REQUIRED. NEOPRENE RUBBER GASKET REQUIRED BETWEEN RISER MOUNTING FLANGE AND GATE FLANGE. MATING SURFACES OF LID AND BODY TO BE MACHINED FOR PROPER FIT. FLANGE MOUNTING BOLTS SHALL BE 3/8" DIA STAINLESS
11. ALTERNATE CLEANOUT/SHEAR GATES TO THE DESIGN SHOWN ON THIS SHEET ARE ACCEPTABLE, PROVIDED THEY MEET THE MATERIAL SPECIFICATIONS ABOVE AND HAVE A SIX BOLT, 10 3/8" BOLT CIRCLE FOR BOLTING THE FLANGE CONNECTION.
12. GATE SHALL NOT OPEN BEYOND THE CLEAR OPENING BY LIMITED HINGE MOVEMENT, STOP TAB, OR SOME OTHER DEVICE.
13. PRECAST CONCRETE MANHOLE CONSTRUCTED IN ACCORDANCE WITH ASTM C478.
14. SEE THIS SHEET FOR DETAILS ON ELBOW AND FOR PLAN VIEW.

3 FLOW CONTROL MH DETAIL

SCALE: N/A

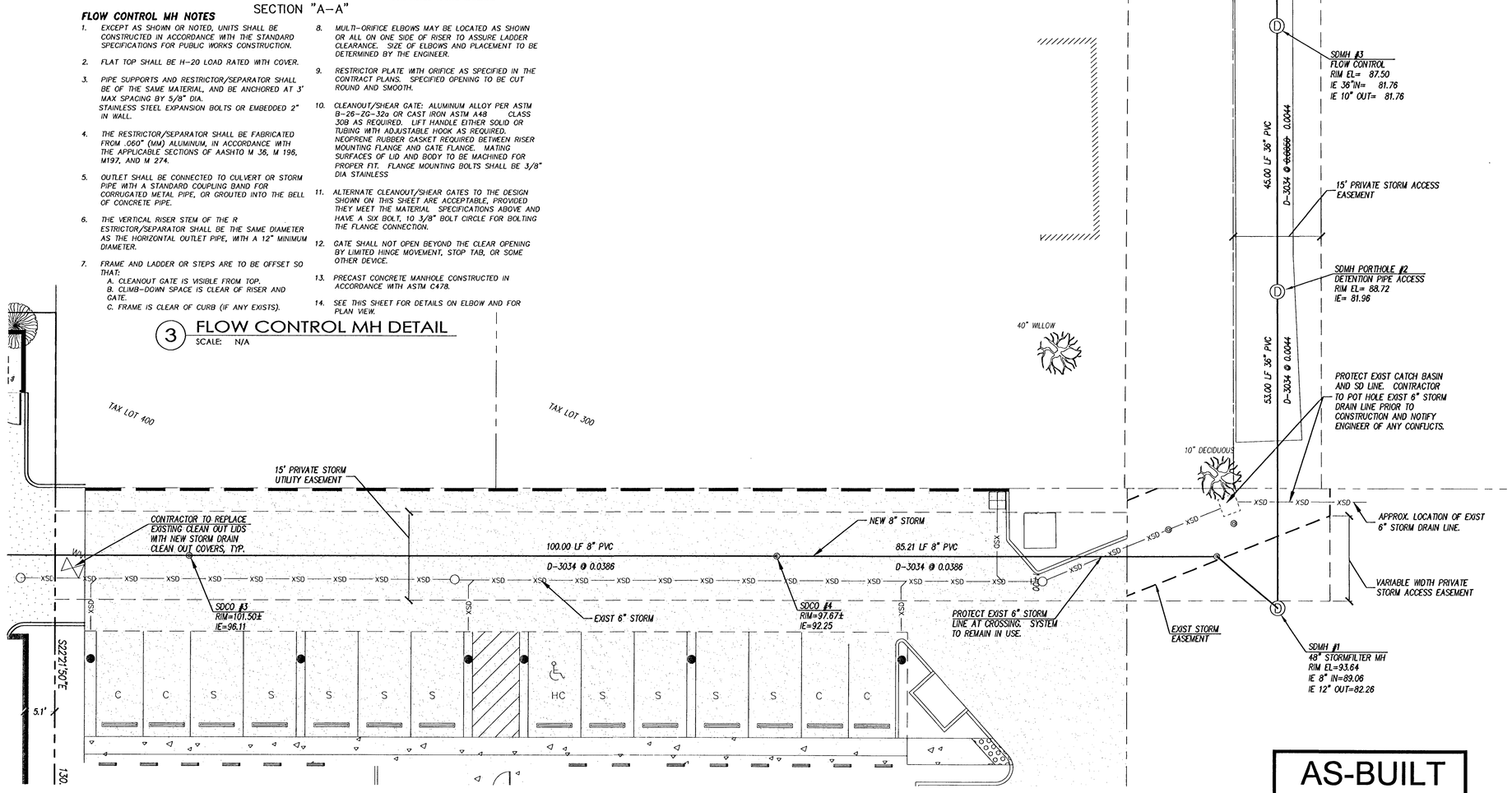

AS-BUILT

DATE 10/24/08

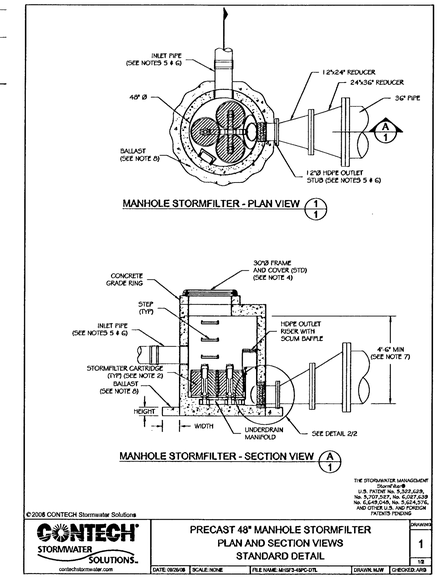

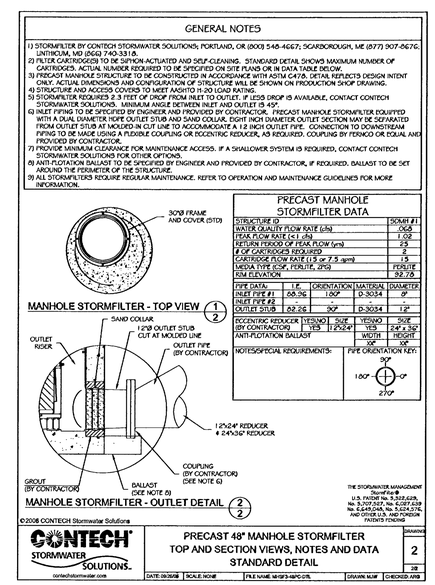

SFA Design Group, LLC
STRUCTURAL | CIVIL | LAND USE PLANNING
9020 SW Washington Square Dr. Suite 550
Portland, Oregon 97223
p: (503) 641-8311 f: (503) 640-7905
sfadesigngroup.com

UTILITY PLAN

WILLAMETTE III BLDG, WILLAMETTE FALLS DR.
CITY OF WEST LINN, OREGON

REGISTERED PROFESSIONAL ENGINEER — OREGON — BRENT E. FOLTHOLTH — VALID THROUGH 12-31-09

NO.	DATE	REVISION	BY
0	7/6/07	SUBMITTED FOR 1ST REVIEW	DPM
1	9/12/07	SUBMITTED FOR 2ND REVIEW	LRL
2	10/24/07	SUBMITTED FOR APPROVAL	LRL
3	11/20/07	REV. PER FIELD MTG W/CITY	LRL
4	1/23/08	FINAL APPROVAL	LRL
5	4/8/08	FIELD MODIFICATIONS	KHM
6	6/3/08	STORM PIPE FROM MH# 3–4	LRL

DESIGNED BY BEF DATE 7/07
DRAWN BY DPM DATE 7/07
REVIEWED BY BEF DATE 7/07
PROJECT NO. 105-024 REF. ____
SCALE 1"=10' N/A
10524-06alt2.dwg

SHEET 6 OF 8

PROJECT WILLAMETTE III BLDG
NO. 105-024
TYPE ENGINEERING

jKemp, Plotted: Jun 29, 2009 – 8:37am, B:\Land Projects 2004\105-024\dwg\Engineering\As-Built\10524-06alt2.dwg

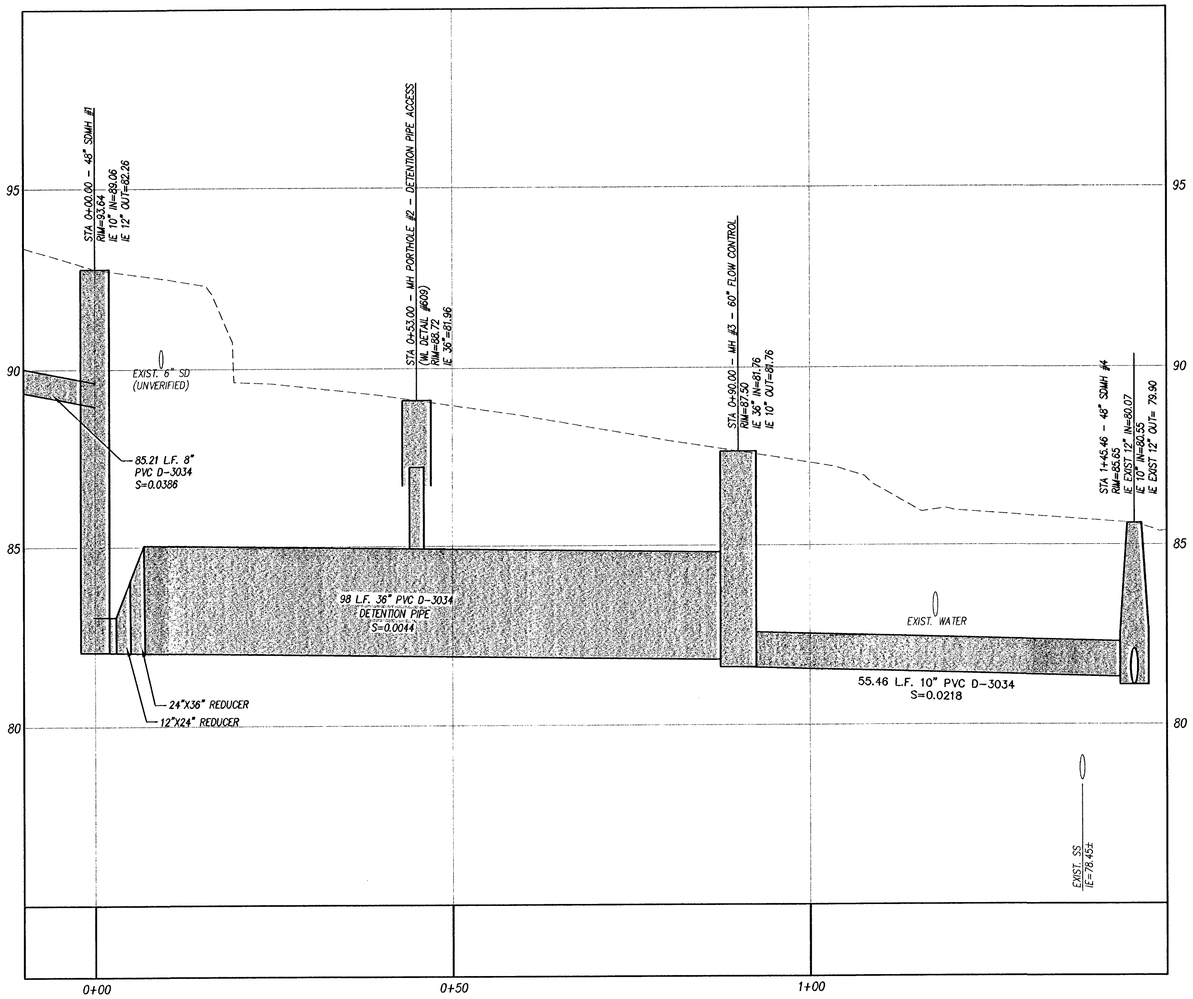

STORM PROFILE

SCALE: 1"=10'H, 1"=5'V

AS-BUILT

DATE 10/24/08

SFA Design Group, LLC
STRUCTURAL | CIVIL | LAND USE PLANNING
9020 SW Washington Square Dr. Suite 350
Portland, Oregon 97223
p: (503) 641-8311 f: (503) 643-7905
sfadesigngroup.com

UTILITY PROFILE

WILLAMETTE III BLDG, WILLAMETTE FALLS DR.
CITY OF WEST LINN, OREGON

REGISTERED PROFESSIONAL ENGINEER 54627PE OREGON MAR. 12, 2002 BRENT E. FITCH

VALID THROUGH 12-31-09

NO.	DATE	REVISION	BY
0	7/6/07	SUBMITTED FOR 1ST REVIEW	DPM
1	9/12/07	SUBMITTED FOR 2ND REVIEW	LRL
2	10/24/07	SUBMITTED FOR APPROVAL	LRL
3	11/20/07	REV. PER FIELD MTG W/CITY	LRL
4	1/23/08	FINAL APPROVAL	LRL
5	4/8/08	FIELD MODIFICATIONS	KHM
6	6/3/08	STORM PIPE FROM MH# 3-4	LRL

DESIGNED BY BEF DATE 7/07
DRAWN BY DPM DATE 7/07
REVIEWED BY BEF DATE 7/07
PROJECT NO. 105-024 REF. ____
SCALE 1"=10' 1"=5'
10524-07util3.dwg

SHEET 7 OF 8

PROJECT WILLAMETTE III BLDG
NO. 105-024
TYPE ENGINEERING

JKamp, Plotted: Jun 29, 2009 – 8:39am, B:\Land Projects 2004\105-024\dwg\Engineering\As-Built\10524-07util3.dwg

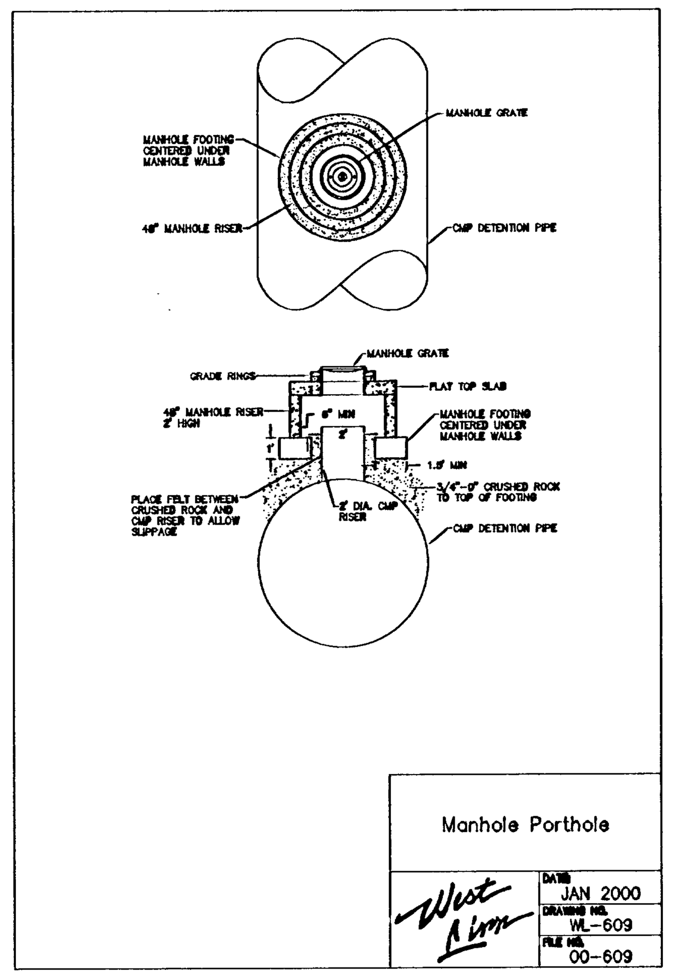

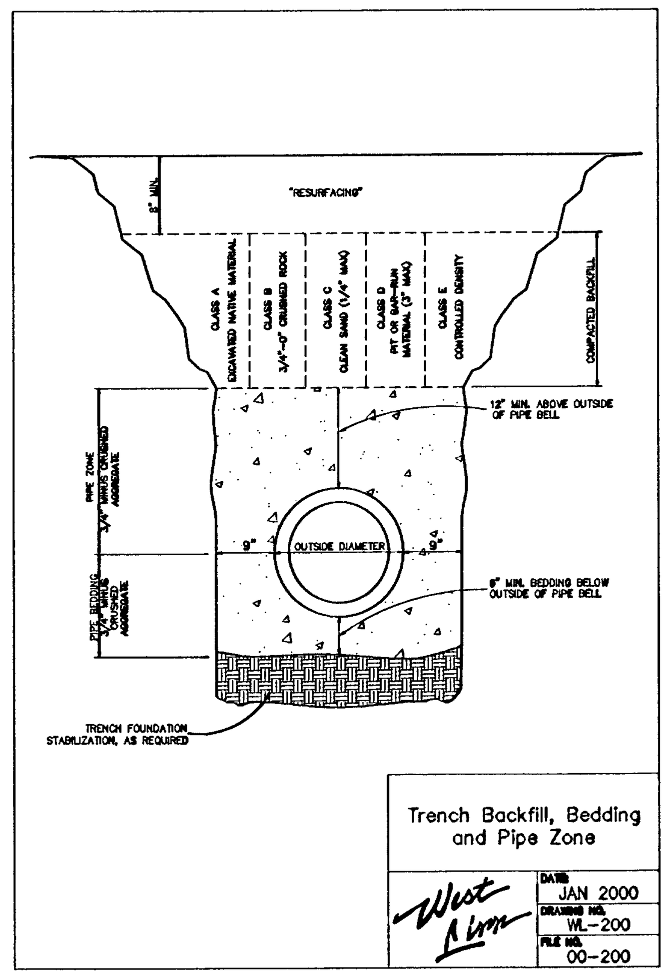

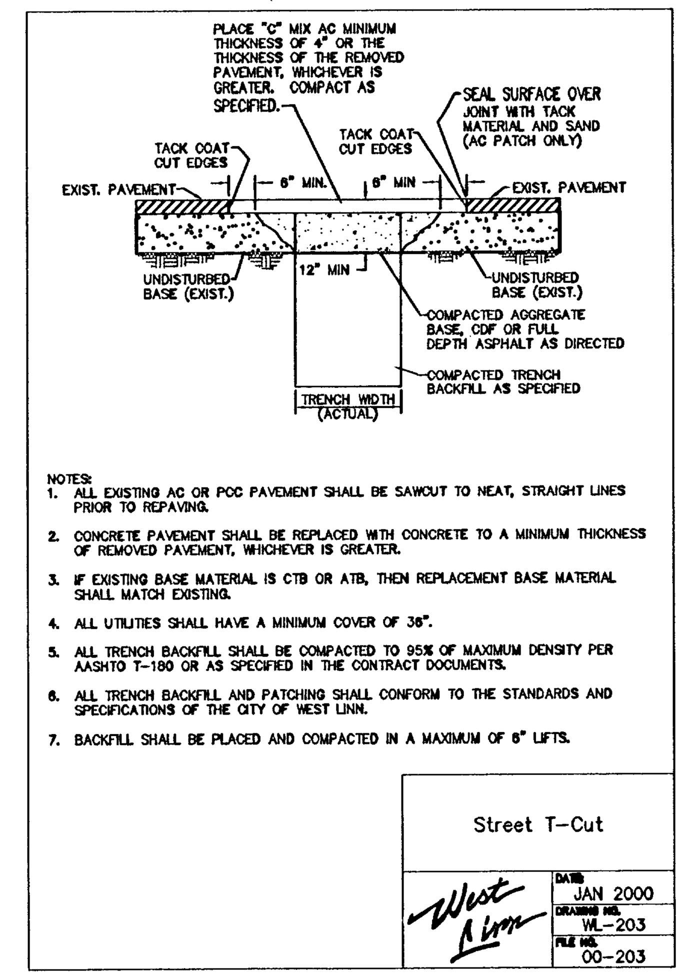

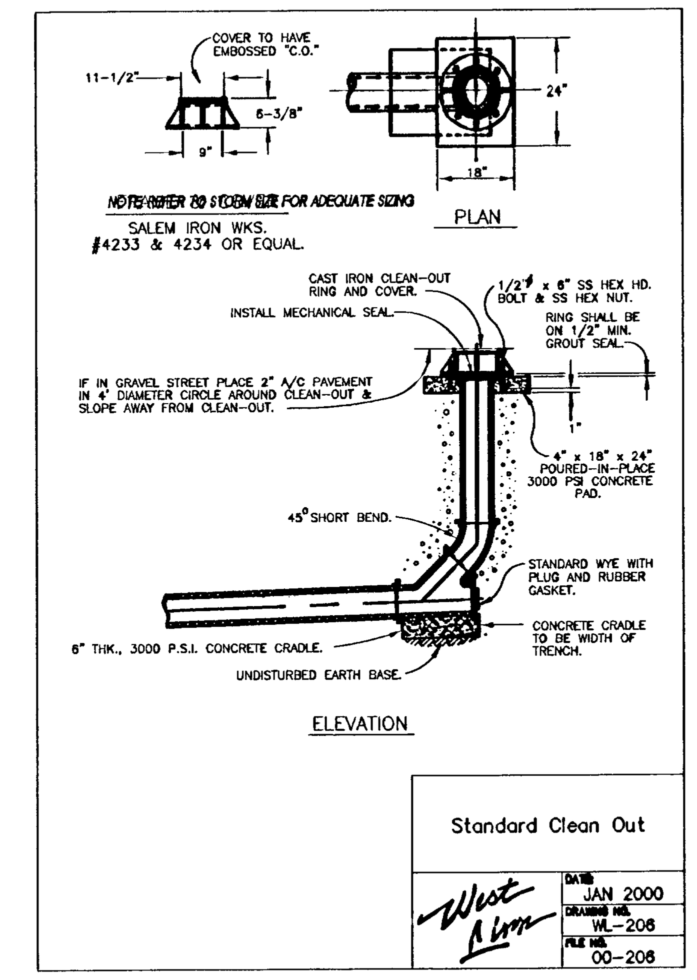

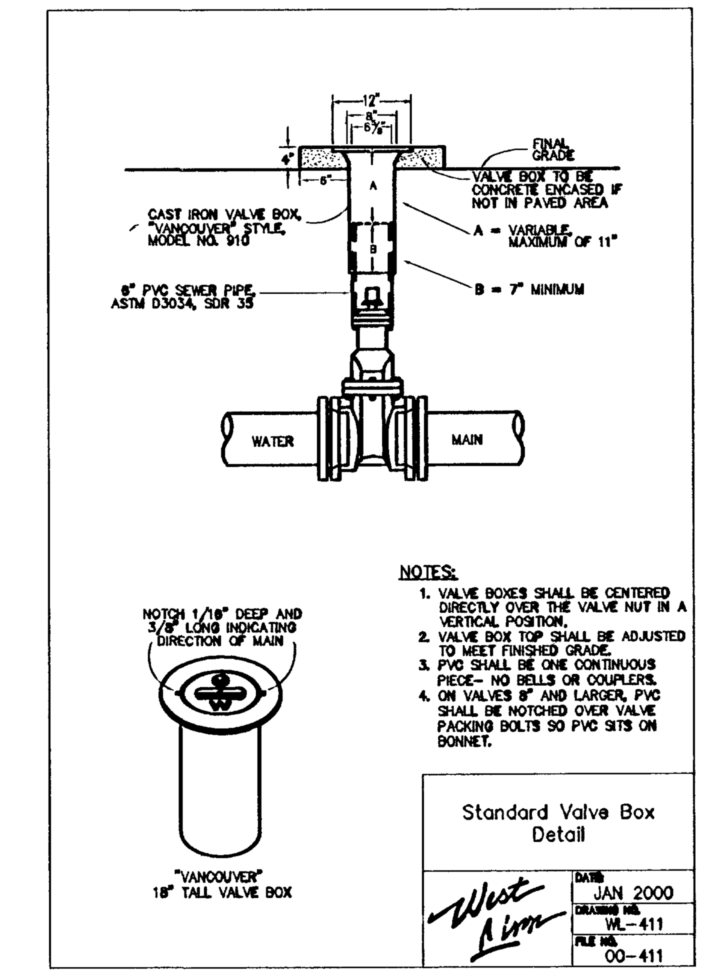

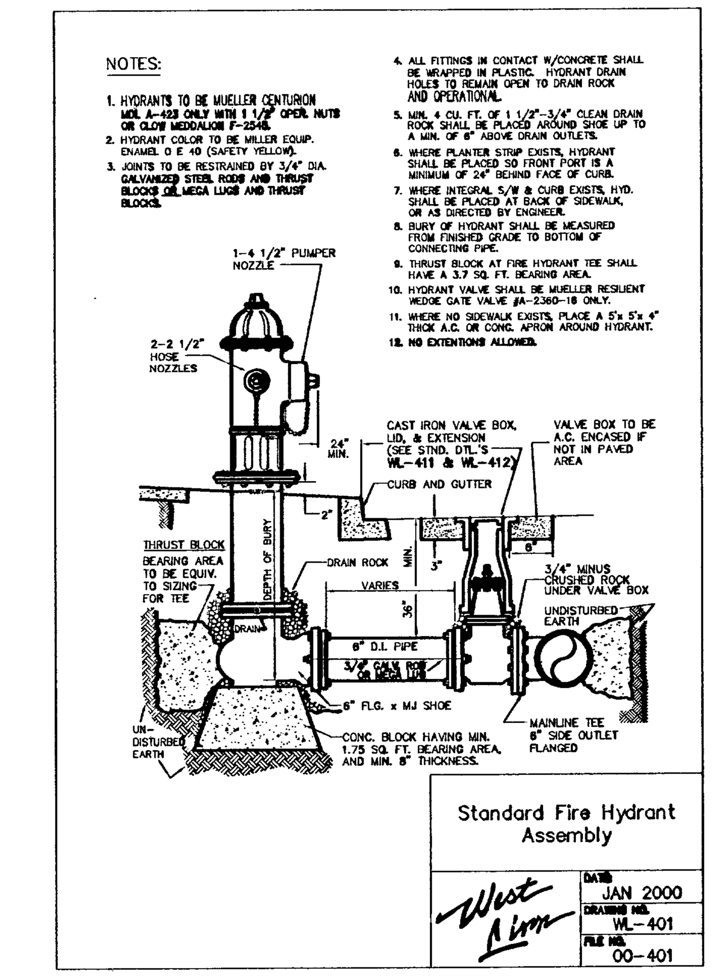

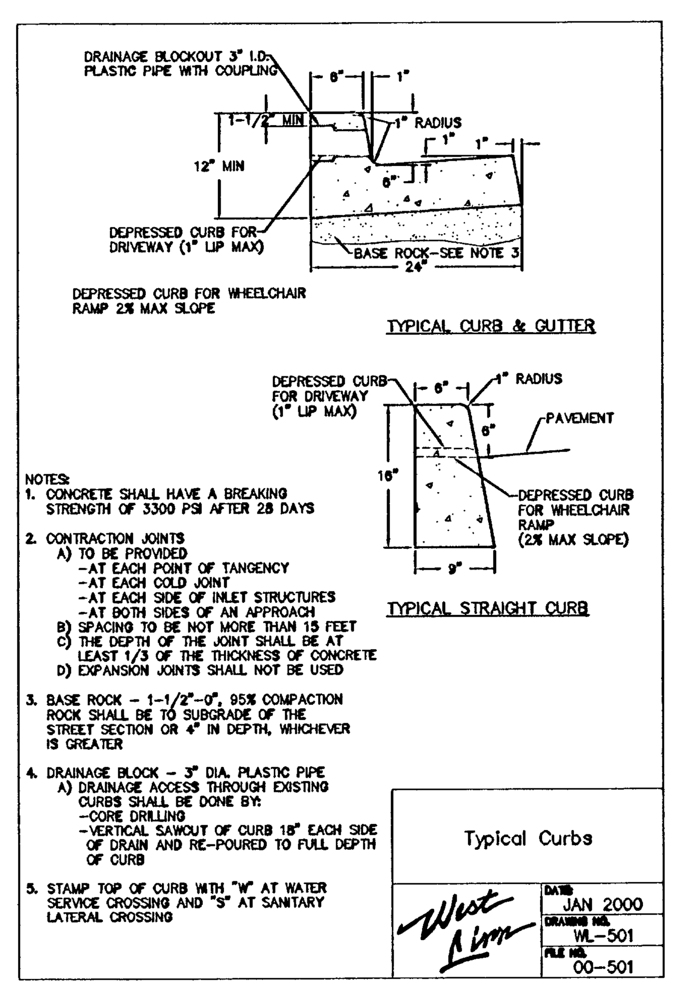

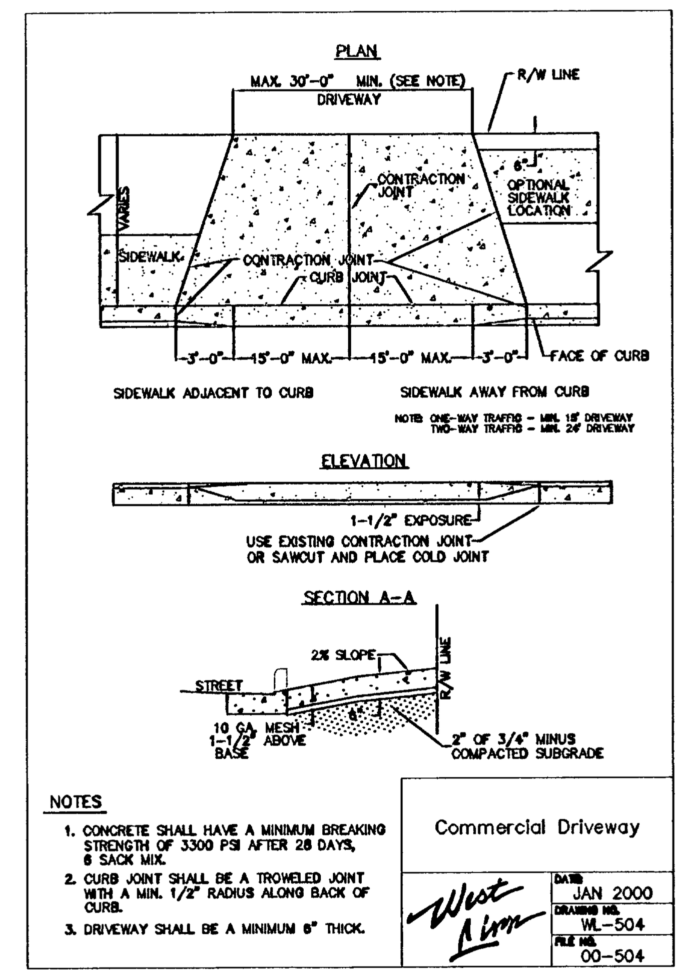

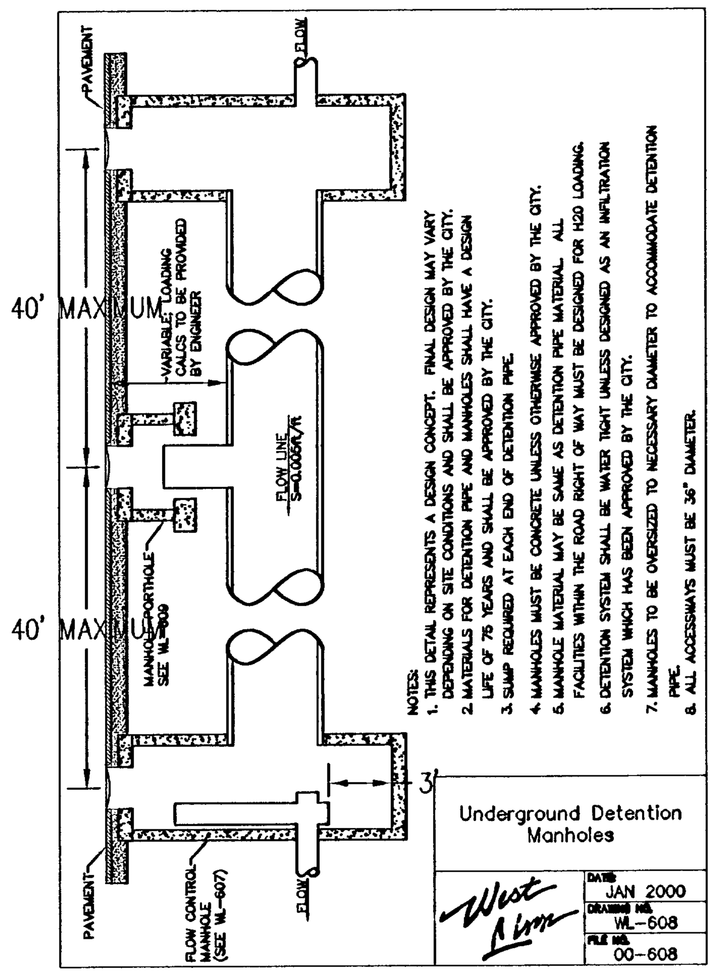

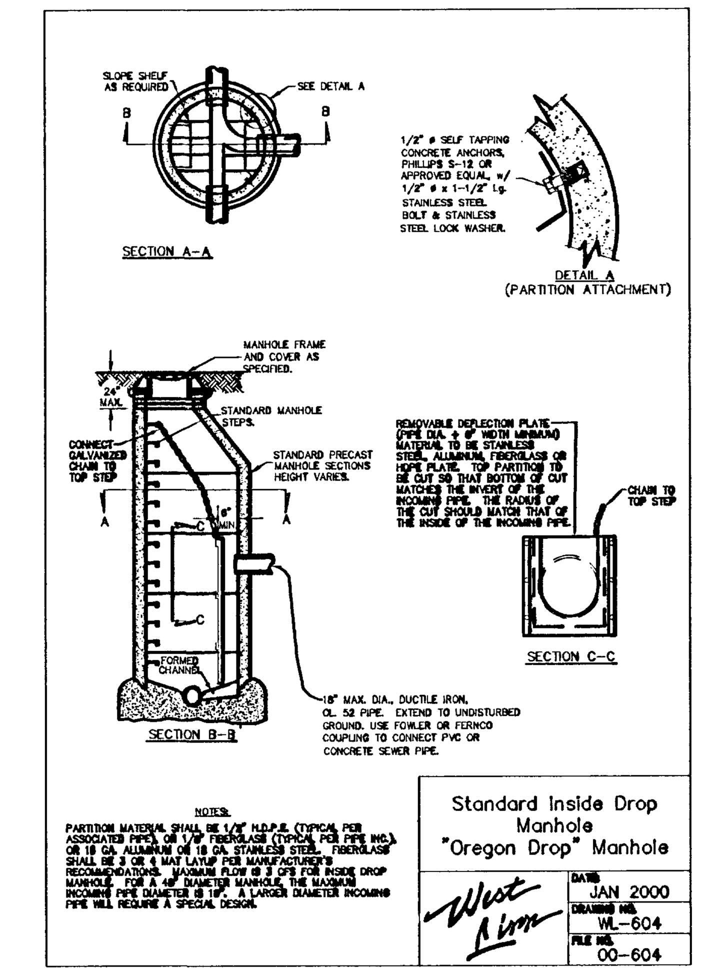

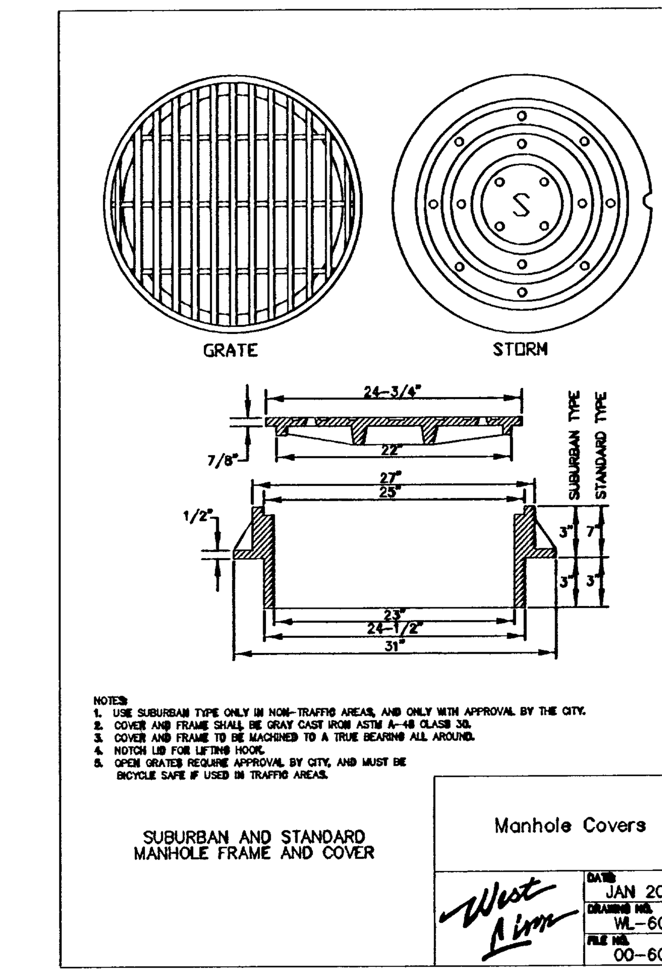

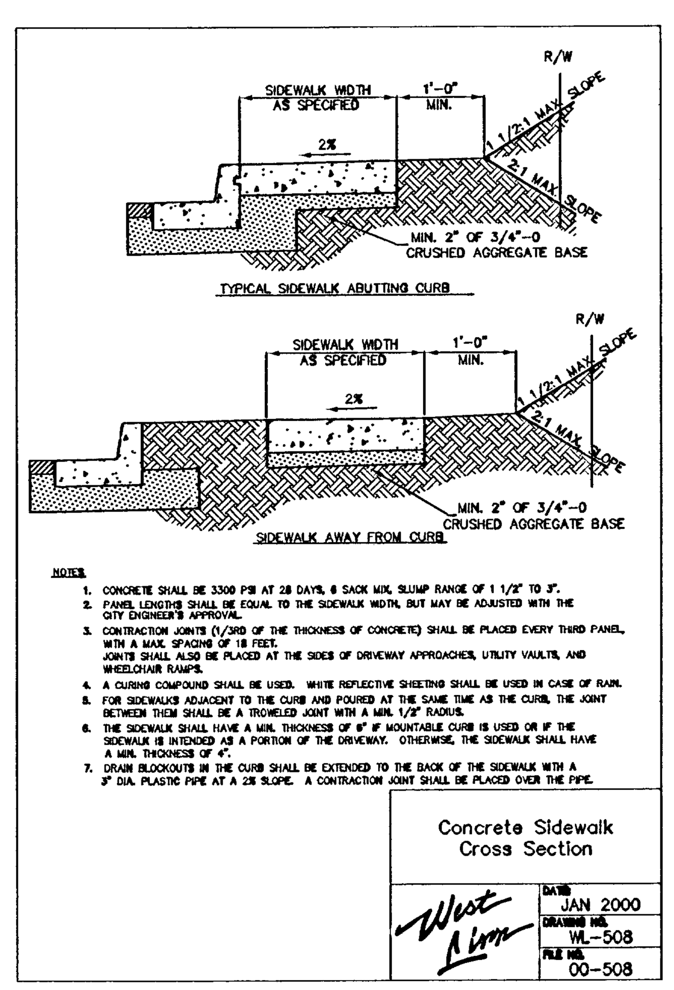

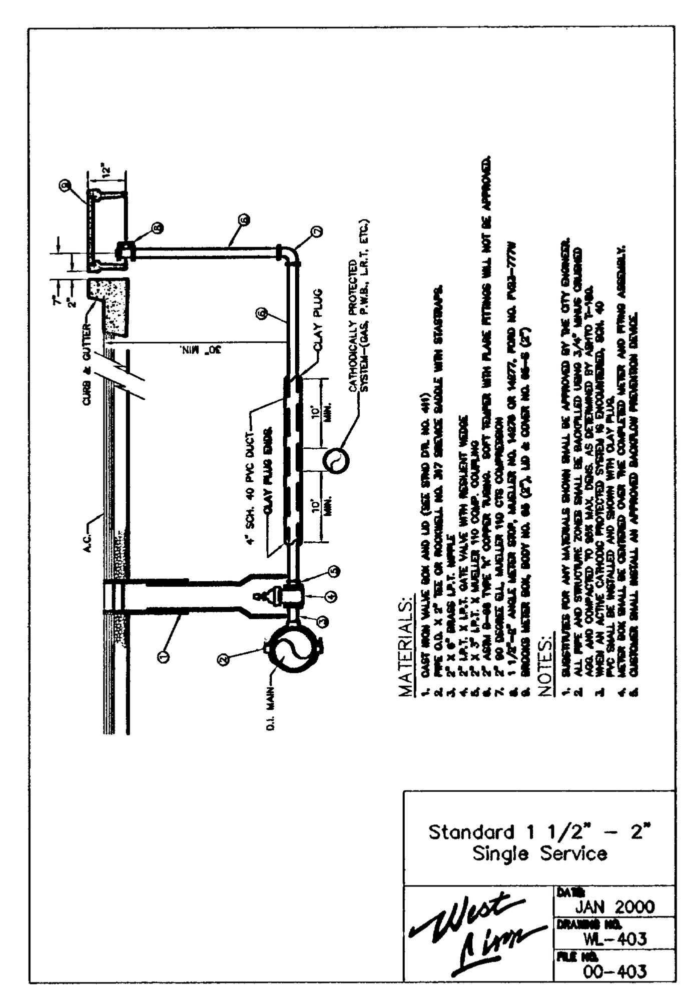

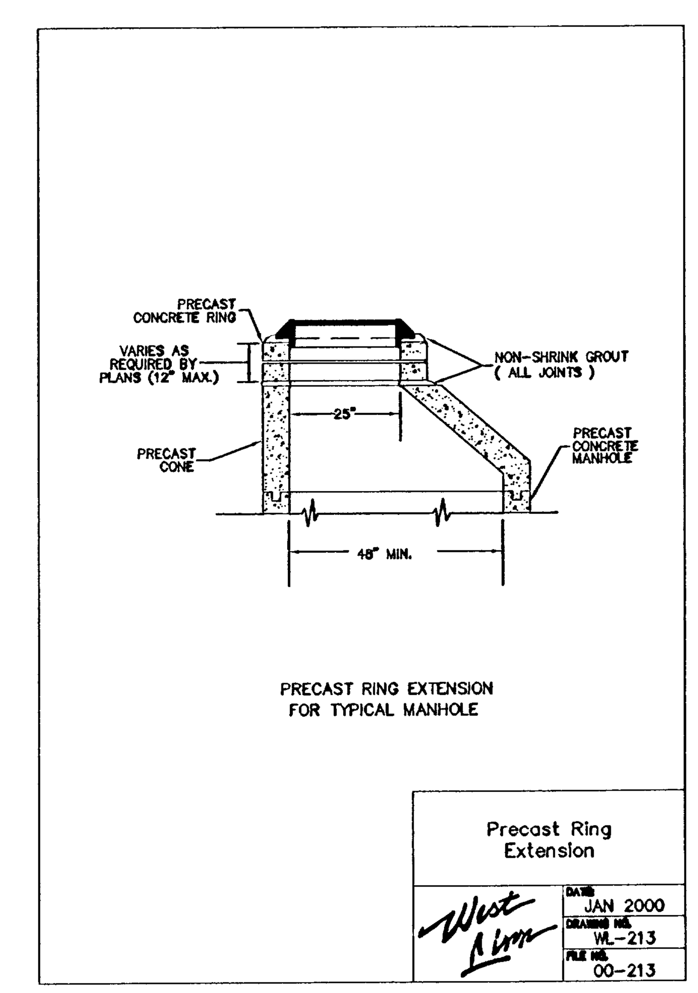

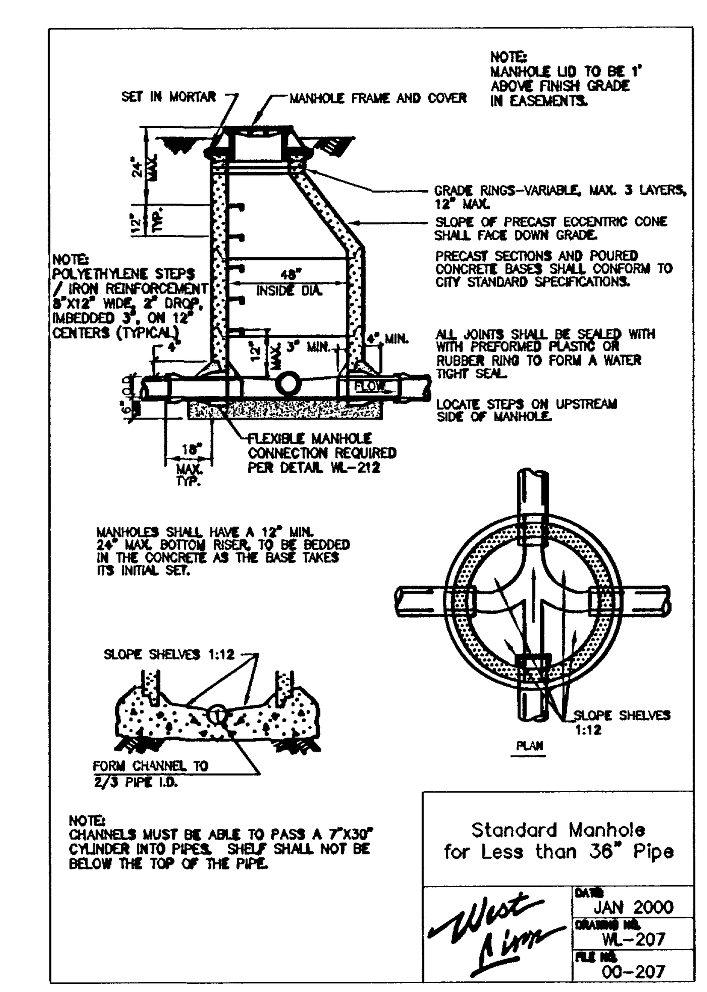

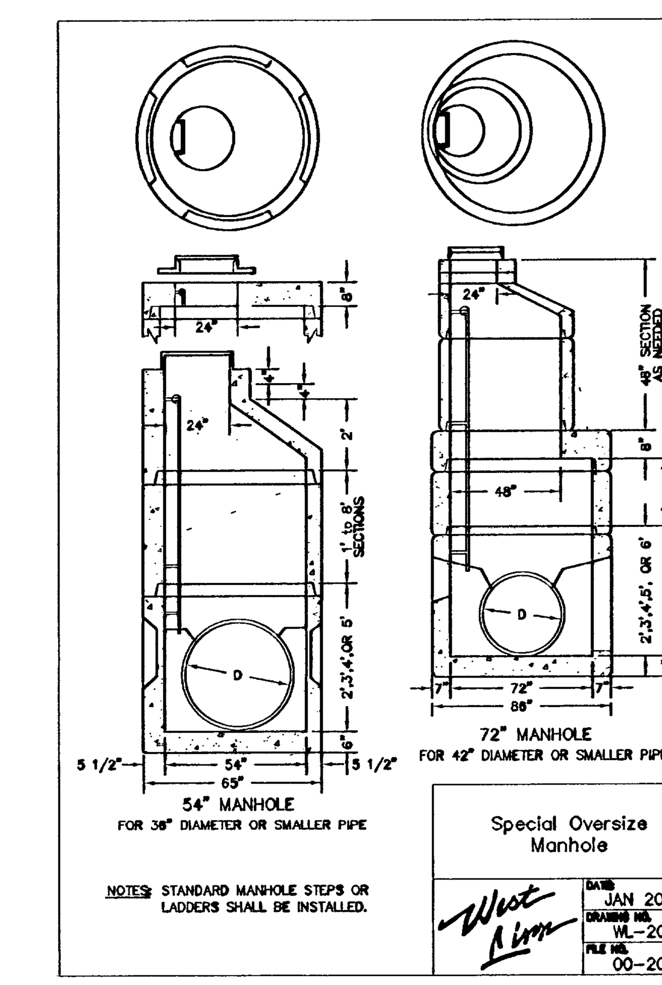

AS-BUILT
DATE 10/24/08

SFA Design Group, LLC
STRUCTURAL | CIVIL | LAND USE PLANNING
9020 SW Washington Square Dr. Suite 350
Portland, Oregon 97223
p: (503) 641-8311 f: (503) 643-7905
sfadesigngroup.com

DETAILS
WILLAMETTE III BLDG, WILLAMETTE FALLS DR.
CITY OF WEST LINN, OREGON

NO.	DATE	REVISION	BY
0	7/6/07	SUBMITTED FOR 1ST REVIEW	DPM
1	9/12/07	SUBMITTED FOR 2ND REVIEW	LRL
2	10/24/07	SUBMITTED FOR APPROVAL	LRL
3	11/20/07	REV. PER FIELD MTG W/CITY	LRL
4	1/23/08	FINAL APPROVAL	LRL
5	4/8/08	FIELD MODIFICATIONS	KHM
6	6/3/08	STORM PIPE FROM MH# 3-4	LRL

DESIGNED BY BEF DATE 7/07
DRAWN BY DPM DATE 7/07
REVIEWED BY BEF DATE 7/07
PROJECT NO. 105-024 REF.
SCALE NO SCALE
N/A
10524-08det1.dwg

SHEET 8 OF 8

PROJECT WILLAMETTE III BLDG
NO. 105-024
TYPE ENGINEERING

JKomp, Plotted: Jun 29, 2009 - 8:40am, B:\Land Projects 2004\105-024\dwg\Engineering\As-Built\10524-08det1.dwg