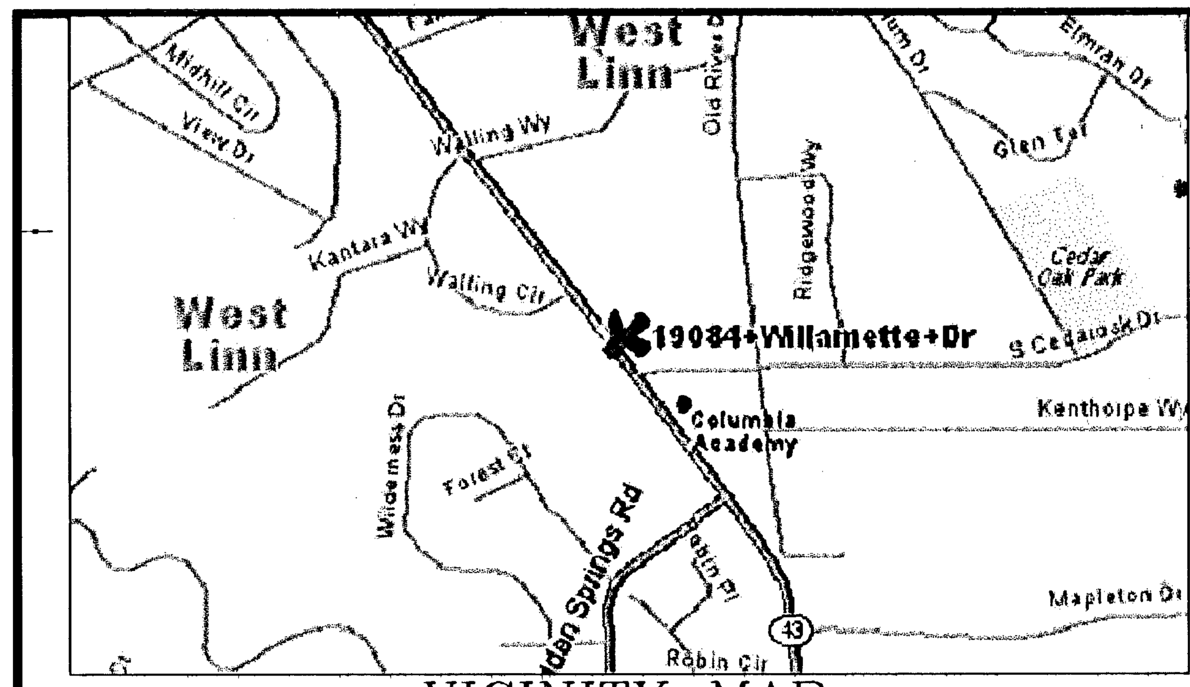

VICINITY MAP
NOT TO SCALE

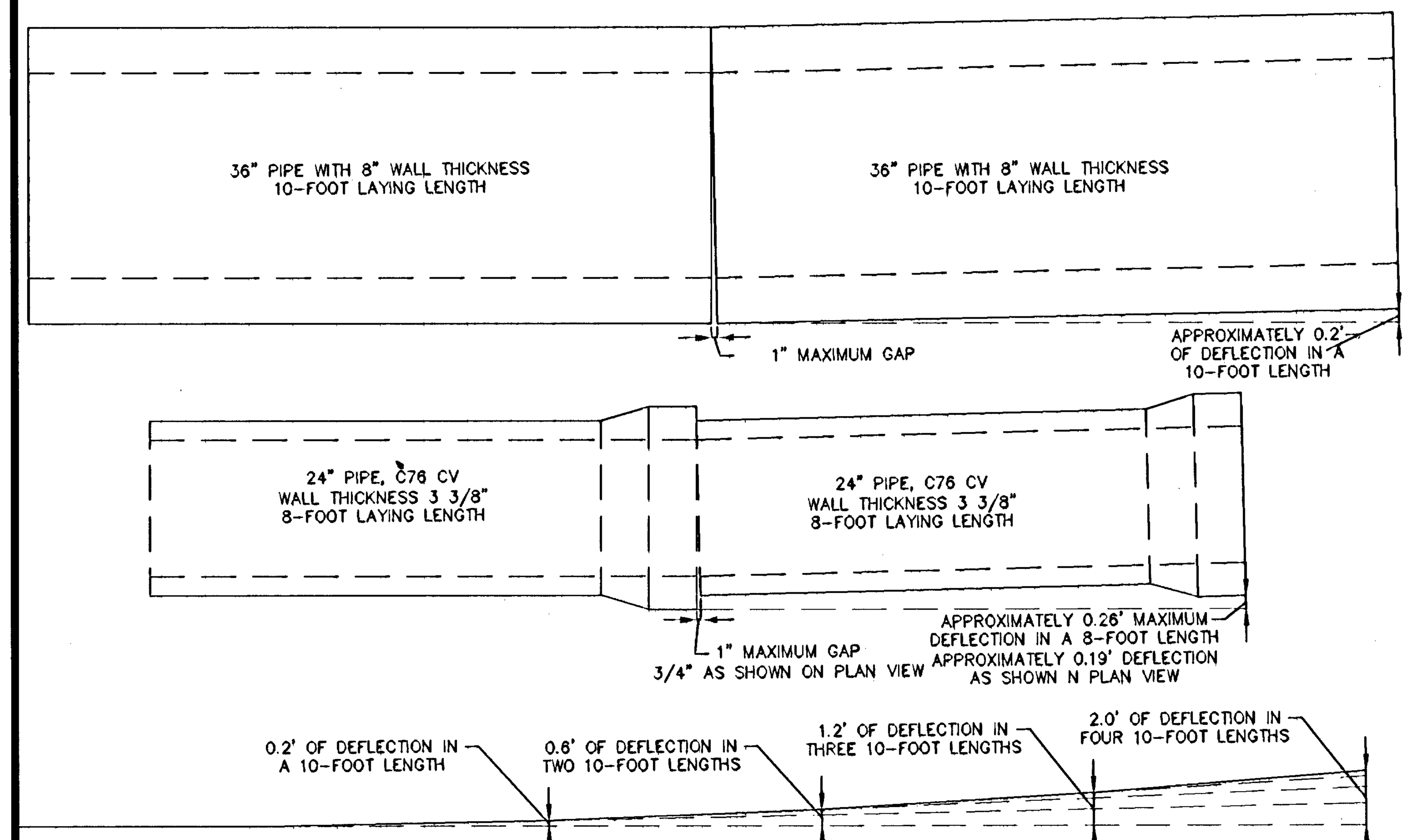

DEFLECTION DETAILS
NTS

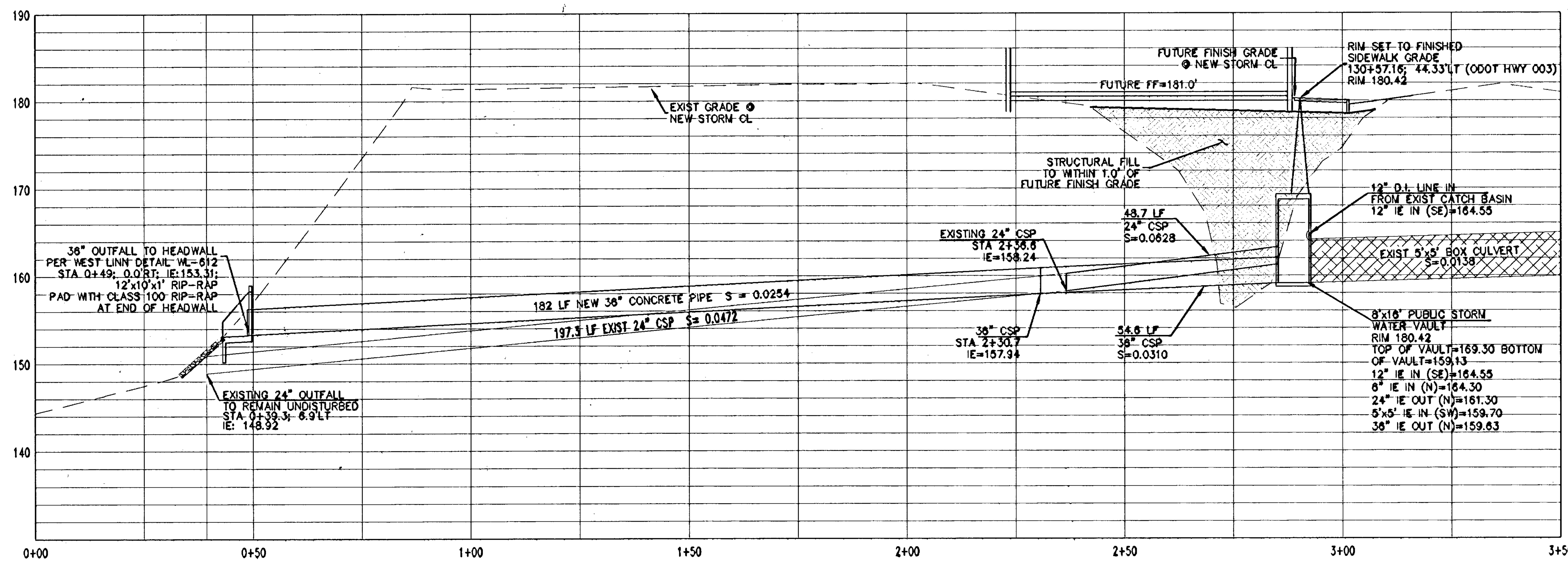

STORM LINE "A" PROFILE
SCALE: HORZ - 1" = 20'
VERT - 1" = 10'

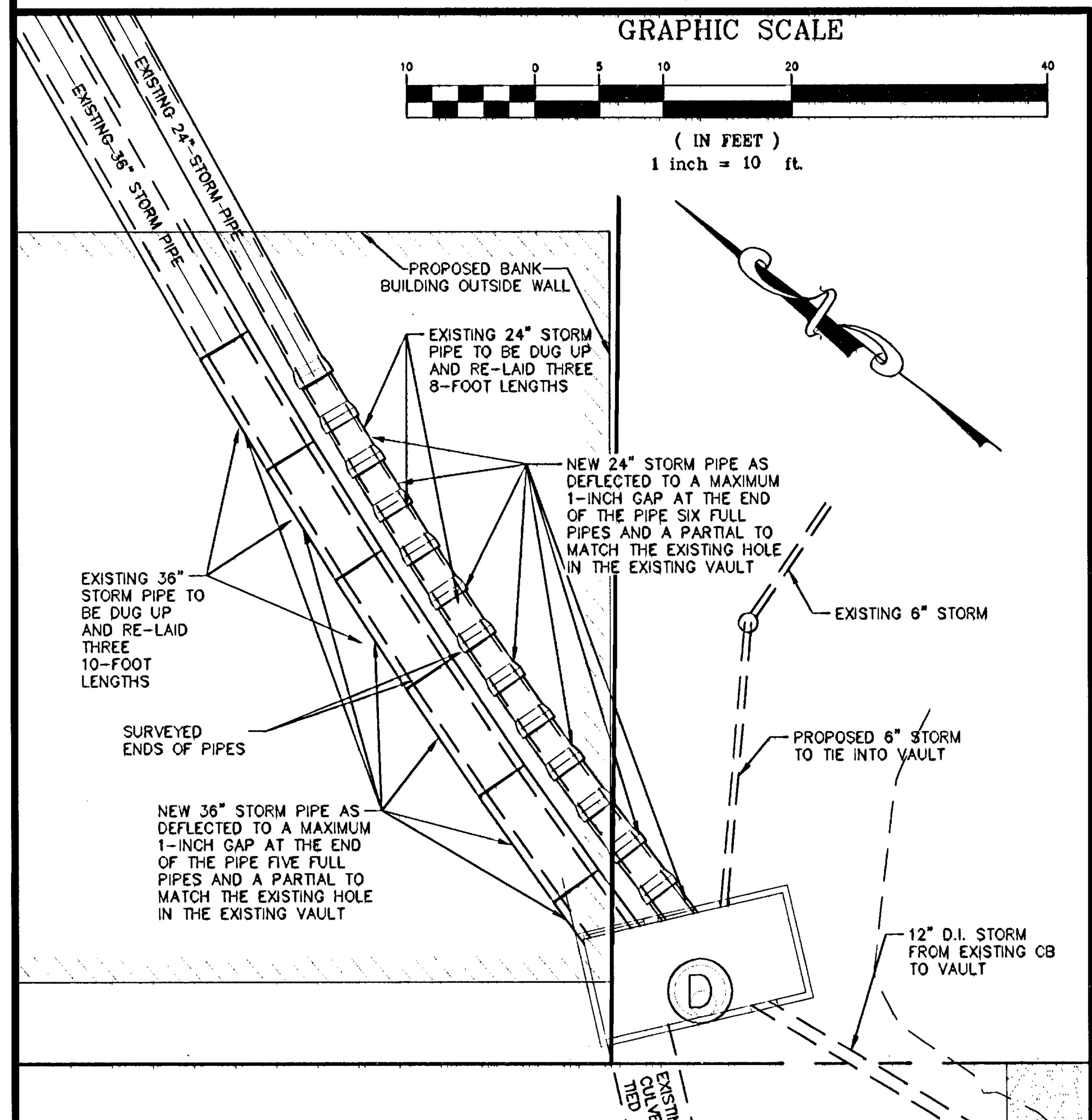

DEFLECTED PIPE DETAIL
SCALE: HORZ - 1" = 10'

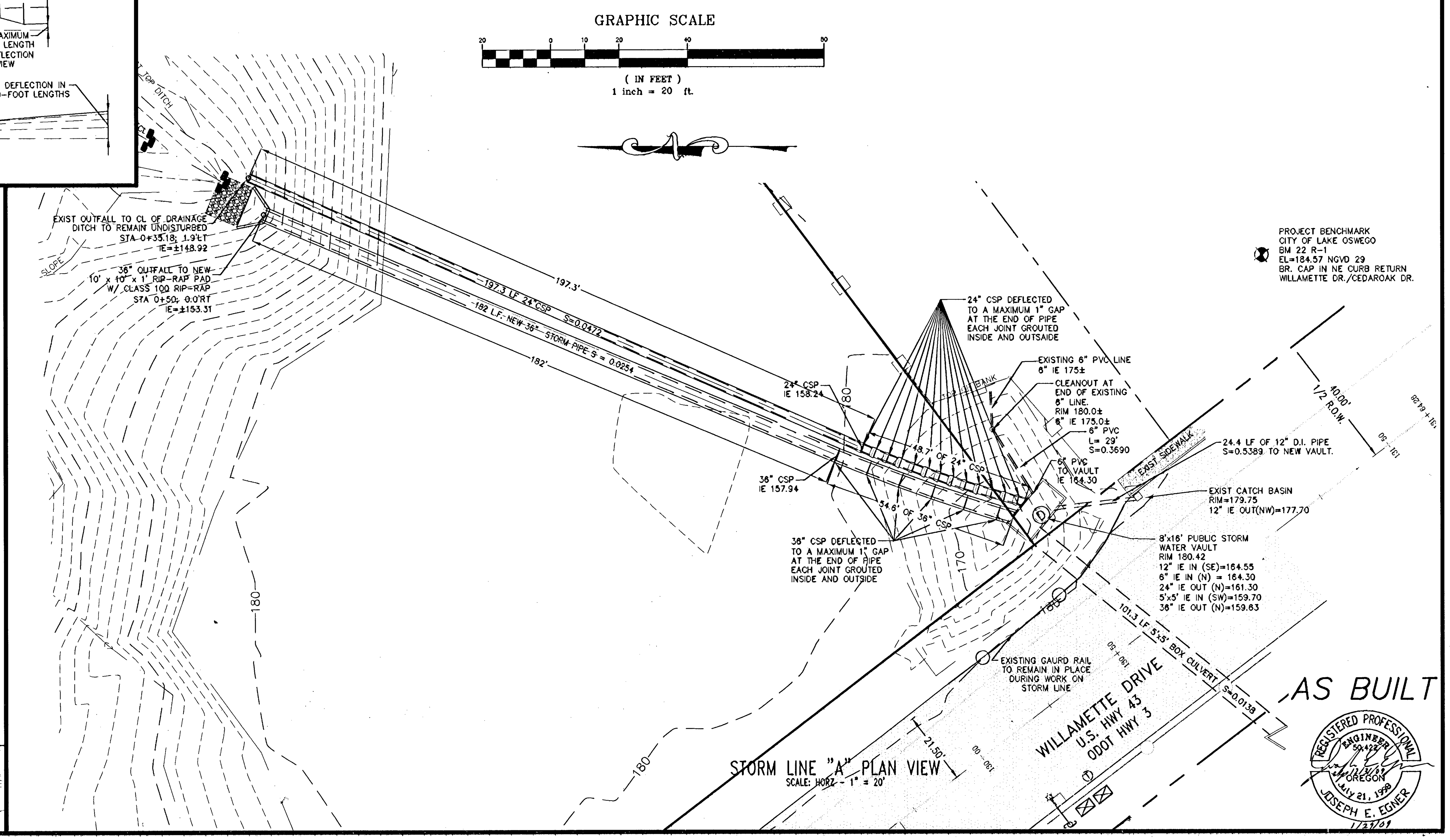

STORM LINE "A" PLAN VIEW
SCALE: HORZ - 1" = 20'

AS BUILT

REGISTERED PROFESSIONAL ENGINEER 50,422 OREGON July 21, 1998 JOSEPH E. EGNER 12/31/09
1/23/09

REVISIONS	BY
REVISED PER ODOT & WEST LINN COMMENTS 12/12/07	JEE
REVISED FOR PIPE DEFLECTION TO VAULT 9/2/08	JEE
AS-BUILT 1/7/09	JEE
AS-BUILT, REVISED PER CITY COMMENTS 1/23/09	JEE

WILLAMETTE VILLAGE
VON STRUCTURES

STORM LINE IMPROVEMENTS
PLAN & PROFILE

SISUL ENGINEERING
4317 NE THURSTON WAY, SUITE 230
VANCOUVER, WASHINGTON 98662
(360) 696-3664
07-069_Pub-Stm_Changes.DWG

DATE	NOV 2007
SCALE	1" = 20'
DRAWN	LJJ
JOB	SVA07-069
SHEET	C1
OF 2	SHEETS

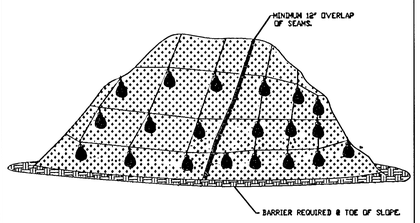

PLASTIC SHEETING

NOTES:
1. MINIMUM 12" OVERLAP OF ALL SEAMS REQUIRED.
2. BARRIER REQUIRED @ TOE OF STOCK PILE.
3. COVERING MAINTAINED TIGHTLY IN PLACE BY USING SANDBAGS OR TIRES ON ROPES WITH A MAXIMUM 10' GRID SPACING IN ALL DIRECTIONS.

PLASTIC SHEETING	Detail Drawing 4-4

Page 4-36

816-LA

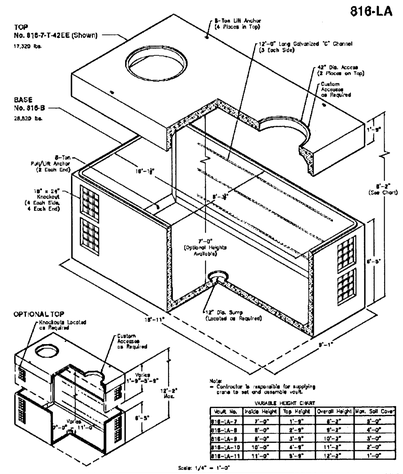

VARIABLE HEIGHT CHART

Vault No.	Inside Height	Top Height	Overall Height	Max. Soil Cover
816-LA-7	7'-0"	1'-9"	8'-3"	8'-0"
816-LA-8	8'-0"	2'-9"	9'-3"	9'-0"
816-LA-9	9'-0"	3'-9"	10'-3"	9'-0"
816-LA-10	10'-0"	4'-9"	11'-3"	9'-0"
816-LA-11	11'-0"	5'-9"	12'-3"	9'-0"

Scale: 1/4" = 1'-0"

UTILITY VAULT a division of Oldcastle Precast	816-LA	816-LA 8 x 16 POWER / WATER / GAS
PO Box 323, Wilsonville, Oregon 97070-0323 Tel: (503) 682-2844 Fax: (503) 682-2887	File Name: 02DJCP816LA1 Issue Date: 2007 www.uvwilsonville.com	

36.0

816-LA

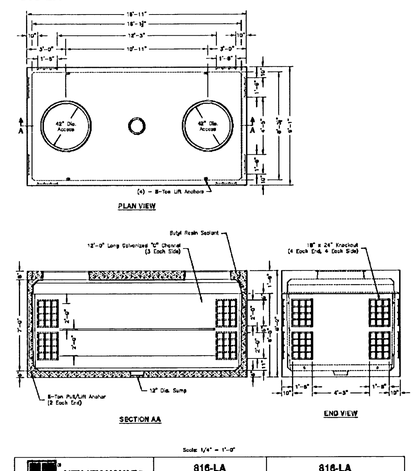

Scale: 1/4" = 1'-0"

UTILITY VAULT a division of Oldcastle Precast	816-LA	816-LA 8 x 16 POWER / WATER / GAS
PO Box 323, Wilsonville, Oregon 97070-0323 Tel: (503) 682-2844 Fax: (503) 682-2887	File Name: 02DJCP816LA2 Issue Date: 2007 www.uvwilsonville.com	

36.1

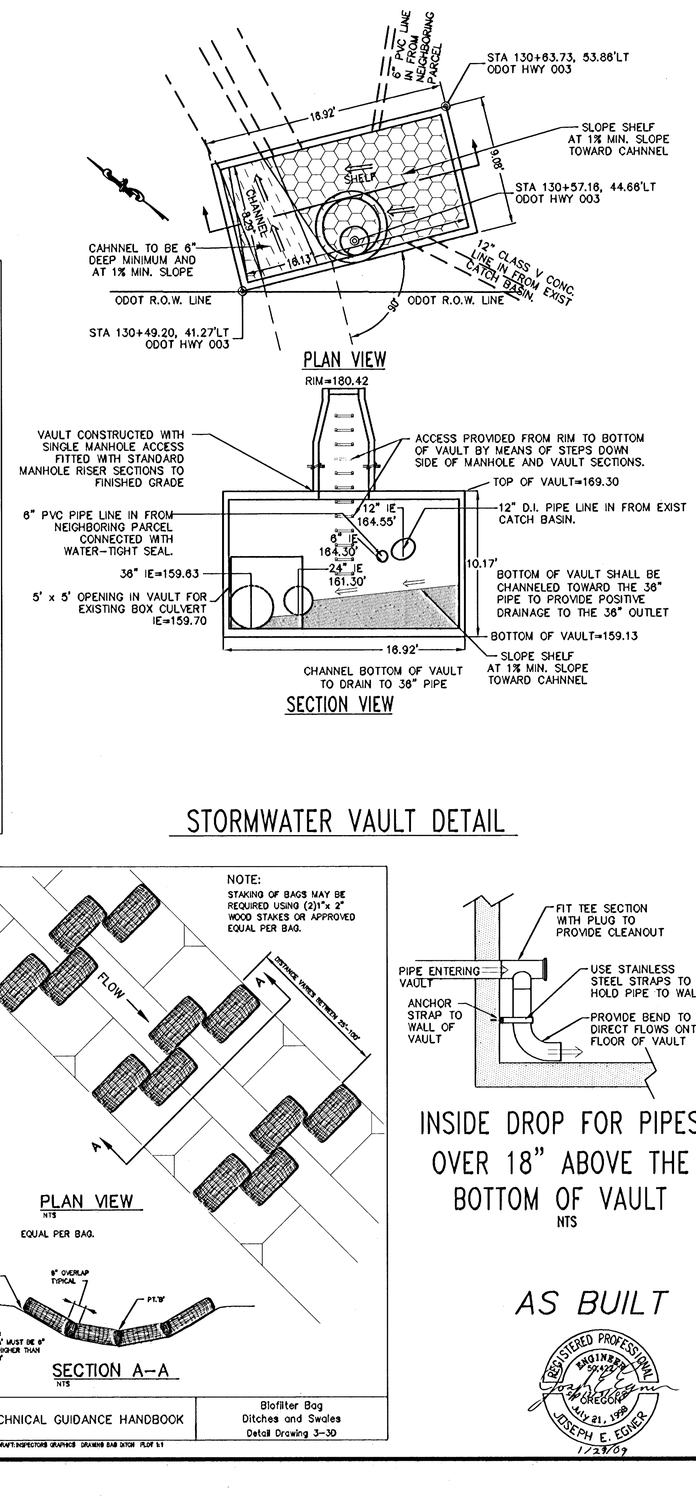

STORMWATER VAULT DETAIL

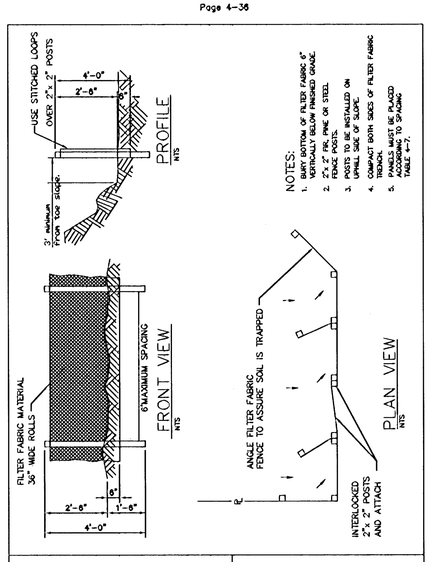

SEDIMENT FENCE	Detail Drawing 4-16

Page 4-82

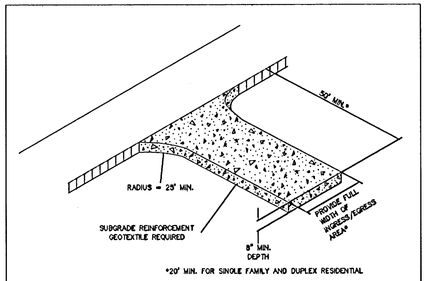

NOTES:
DIMENSIONS
SINGLE FAMILY
20' LONG BY 20' WIDE
8" DEEP OF ¾" MINUS CLEAN ROCK.
COMMERCIAL
50' LONG BY 20' WIDE
3-8" CLEAN ROCK.
GOVERNING AUTHORITY MAY REQUIRE GEOTEXTILE FABRIC TO PREVENT SUB-SOIL PUMPING.

CONSTRUCTION ENTRANCE	Detail Drawing 4-5

Page 4-43

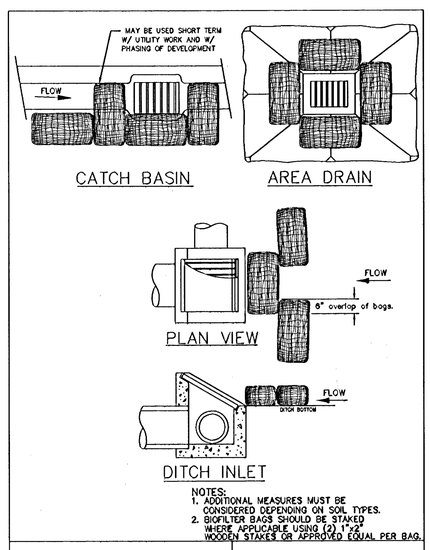

NOTES:
1. ADDITIONAL MEASURES MUST BE CONSIDERED DEPENDING ON SOIL TYPES.
2. BIOFILTER BAGS SHOULD BE STAKED WHERE APPLICABLE USING (2) 1"x2" WOODEN STAKES OR APPROVED EQUAL PER BAG.

INLET PROTECTION TYPE 4	Detail Drawing 4-24

Page 4-111

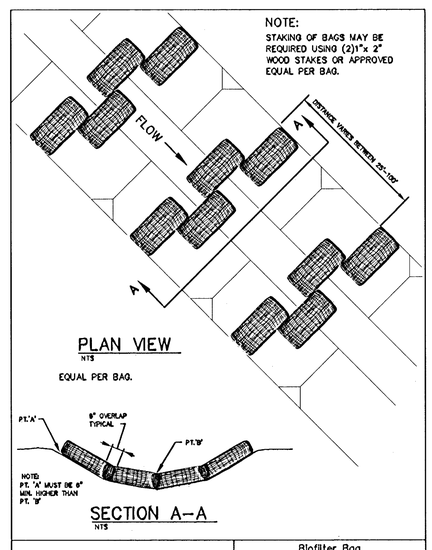

TECHNICAL GUIDANCE HANDBOOK	Biofilter Bag Ditches and Swales Detail Drawing 3-30

FILE DRAFT:INSPECTORS GRAPHICS DRAWING BAG DITCH PLOT 5:1

INSIDE DROP FOR PIPES OVER 18" ABOVE THE BOTTOM OF VAULT
NTS

AS BUILT

REGISTERED PROFESSIONAL ENGINEER OREGON JULY 21, 1989 JOSEPH E. EGINER 1/28/09

REVISIONS	BY
REVISED PER ODOT & WEST LINN COMMENTS 10/16/07	JEE
REVISED TO REFLECT LOCATION OF EXIST 24" VCP 11/01/08	JEE
REVISED VAULT DETAIL FOR MOVE FROM ROW 1/29/09	JEE
REVISED PER FINAL CONNECTION ELEVATION CORRECTION 1/6/09	JEE
AS-BUILT 1/7/09	JEE
AS-BUILT REVISED PER REDLINE COMMENTS 1/23/09	JEE

WILLAMETTE VILLAGE
VON STRUCTURES

VAULT AND EROSION CONTROL
DETAILS AND GENERAL NOTES

SISUL ENGINEERING
4317 NE THURSTON WAY, SUITE 230
VANCOUVER, WASHINGTON 98662
(360) 696-3664
07-069_Pub-Stm_Impv.DWG

DATE	NOV 2007
SCALE	1" = 20'
DRAWN	LJJ
JOB	SVA07-069
SHEET	C2
OF	2 SHEETS