CITY OF WEST LINN, OREGON

WILDERNESS DRIVE STORM SEWER

MARCH, 1983

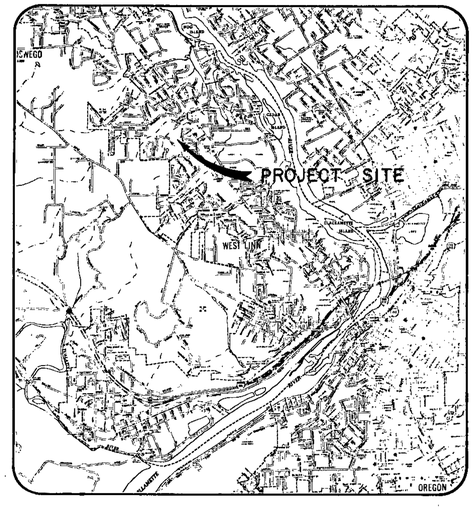

VICINITY MAP

PREPARED BY

MSA

MURRAY, SMITH & ASSOCIATES INC

Engineers / Planners

INDEX OF DRAWINGS

SHEET NO.	TITLE
1	INDEX OF DRAWINGS
2	PLAN & PROFILE - LINE 'A' & 'A-1'
3	PLAN & PROFILE - LINE 'A'
4	PLAN & PROFILE - LINE 'B'
5	PLAN & PROFILE - LINE 'A-1'
6	DETAILS
7	INLET STRUCTURE DETAILS

PRELIMINARY DRAWING
Date MAR 18 1983

Set No. _____

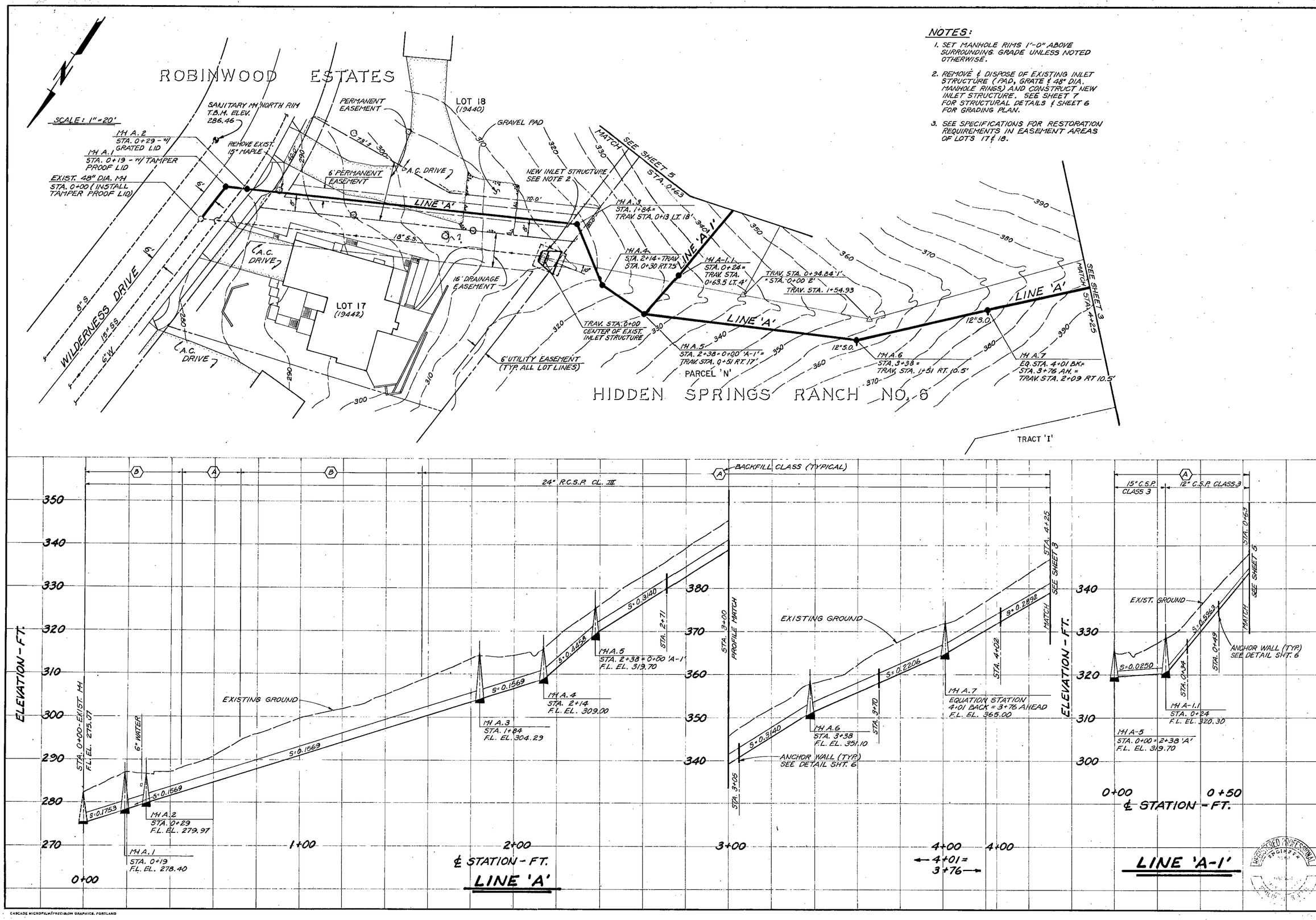

NOTES:

1. SET MANHOLE RIMS 1'-0" ABOVE SURROUNDING GRADE UNLESS NOTED OTHERWISE.
2. REMOVE & DISPOSE OF EXISTING INLET STRUCTURE (PAD, GRATE & 48" DIA. MANHOLE RINGS) AND CONSTRUCT NEW INLET STRUCTURE. SEE SHEET 7 FOR STRUCTURAL DETAILS & SHEET 6 FOR GRADING PLAN.
3. SEE SPECIFICATIONS FOR RESTORATION REQUIREMENTS IN EASEMENT AREAS OF LOTS 17 & 18.

NO.	REVISION	BY	DATE

PLAN & PROFILE

LINE 'A' STA. 0+00 to 4+25
LINE 'A-1' STA. 0+00 to 0+63

SCALE 1" = 20' H.; 1" = 10' V. DATE MARCH, 1983

CITY OF WEST LINN, OREGON
WILDERNESS DRIVE
STORM SEWER

DESIGNED PHS DRAWN RFD CHECKED PHS

MURRAY, SMITH & ASSOCIATES, INC.
Engineers/Planners
Harrison Square
1800 S.W. First, Suite 510
Portland, Oregon 97201
503-225-9010

MSA

SHEET 2 of 7

FILE NO. 82-0037.02

CASCADE MICROFILM/PRECISION GRAPHICS, PORTLAND

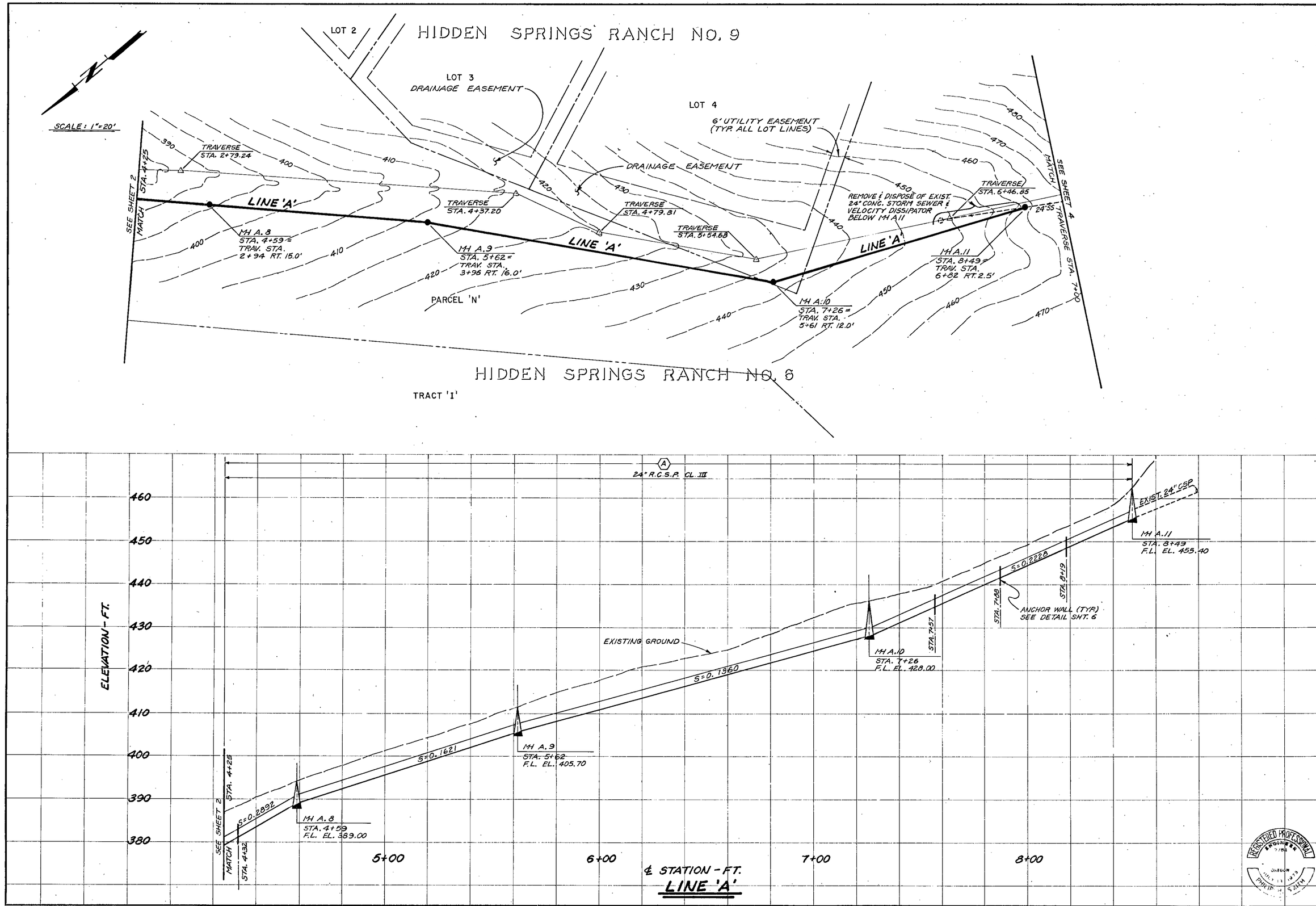

CASCADE MICROFILM/PRECISION GRAPHICS, PORTLAND

NO.	REVISION	BY	DATE

PLAN & PROFILE
LINE 'A' STA. 4+25 to END

SCALE 1"=20' H.; 1"=10' V. | DATE MARCH, 1983

CITY OF WEST LINN, OREGON
WILDERNESS DRIVE
STORM SEWER

DESIGNED PHS | DRAWN RFD | CHECKED PHS

MURRAY, SMITH & ASSOCIATES
Engineers / Planners
Harrison Square
1800 S.W. First, Suite 510
Portland, Oregon 97201
503-225-9010

MSA

REGISTERED PROFESSIONAL ENGINEER
OREGON
JULY 13, 1973
PHILIP H. SMITH

SHEET
3 of 7

FILE NO.
82-0037.02

SCALE: 1" = 20'

HIDDEN SPRINGS RANCH NO. 9

LOT 6

LOT 13

LOT 12

LOT 20

LOT 7

LOT 8

HIDDEN SPRINGS RANCH NO. 6

CARRIAGE WAY

12" SS

6' UTILITY EASEMENT (TYP. ALL LOT LINES)

DRAINAGE EASEMENT

SHALLOW I'H B.1
STA. 0+13 =
TRAV. STA.
8+89 LT. 7.5'

SHALLOW I'H B.2
STA. 0+32 =
TRAV. STA.
9+08 LT. 6.5'

EXIST. 48" DIA. MH
STA. 1+76

REMOVE & DISPOSE OF EXISTING 12" CMP STORM SEWER AND VELOCITY DISSIPATOR

TRAV. STA. 10+43.59
EXIST. OUTLET

I'H B.3
STA. 1+41 =
TRAV. STA. 10+15 LT. 7.0'

EXIST. 48" DIA. MH
STA. 0+00

EXIST. INLET STRUCTURE

TRAVERSE
STA. 9+19.50

TRAVERSE
STA. 10+19.53

TRAVERSE
STA. 7+33.40

SEE SHEET 3
MATCH TRAVERSE STA. 7+00

PARCEL 'N'

WILDWOOD DRIVE

6" W (FUTURE)

8" SS (FUTURE)

12" SS (FUTURE)

24" SS

LINE 'B'

490 500 510 520 530 540 550 470 480

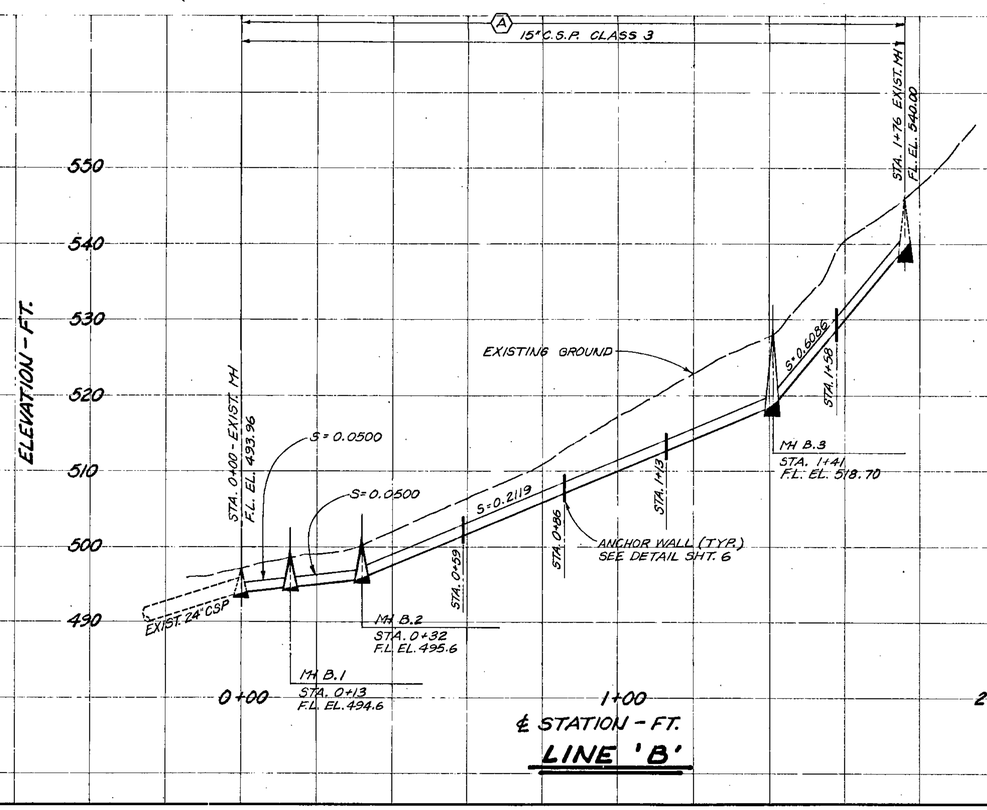

LINE 'B'

NO.	REVISION	BY	DATE

PLAN & PROFILE
LINE 'B' STA. 0+00 to END

SCALE 1" = 20' H.; 1" = 10' V. | DATE MARCH, 1983

CITY OF WEST LINN, OREGON
WILDERNESS DRIVE
STORM SEWER

DESIGNED PHS | DRAWN RFD | CHECKED PHS

MURRAY, SMITH & ASSOCIATES, INC.
Engineers / Planners
Harrison Square
1800 S.W. First, Suite 310
Portland, Oregon 97201
503-222-9000

MSA

REGISTERED PROFESSIONAL ENGINEER 7-84 OREGON PHILIP H. SMITH

SHEET
4 of 7

FILE NO.
82-0037.02

CASCADE MICROFILM/PRECISION GRAPHICS, PORTLAND

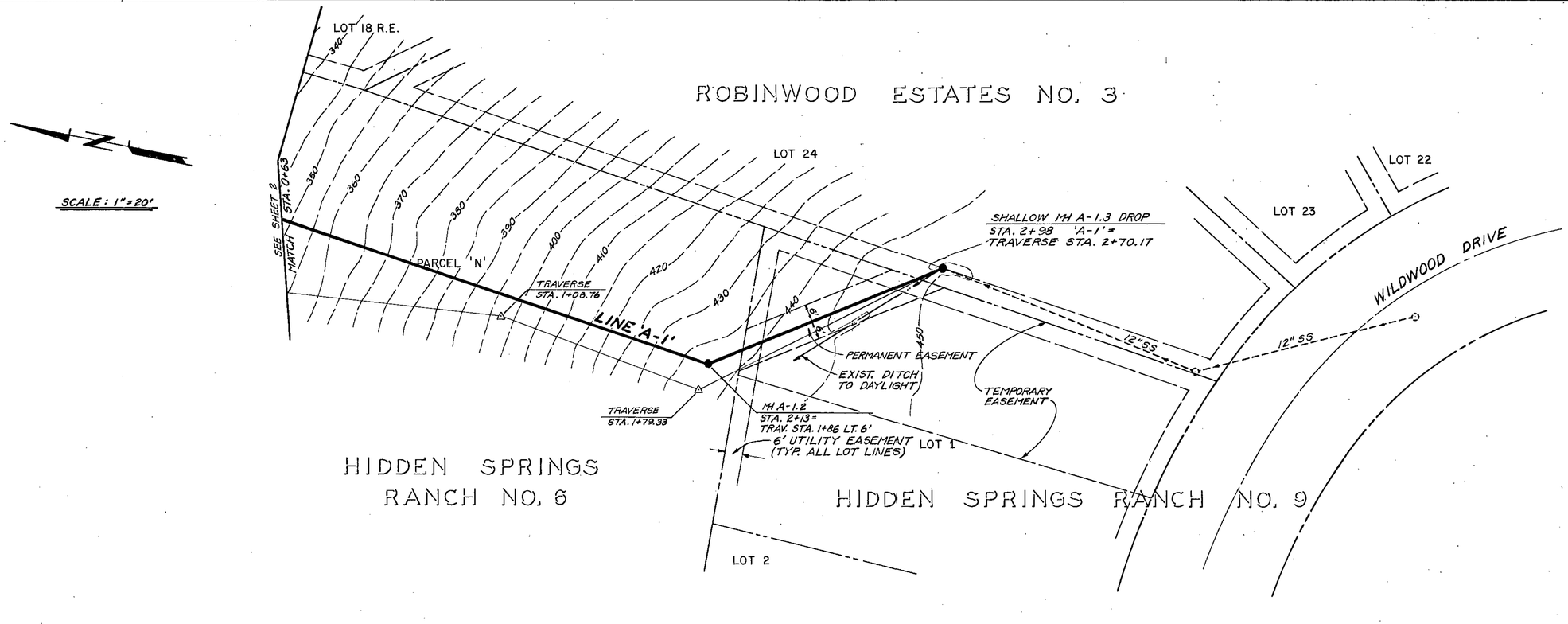

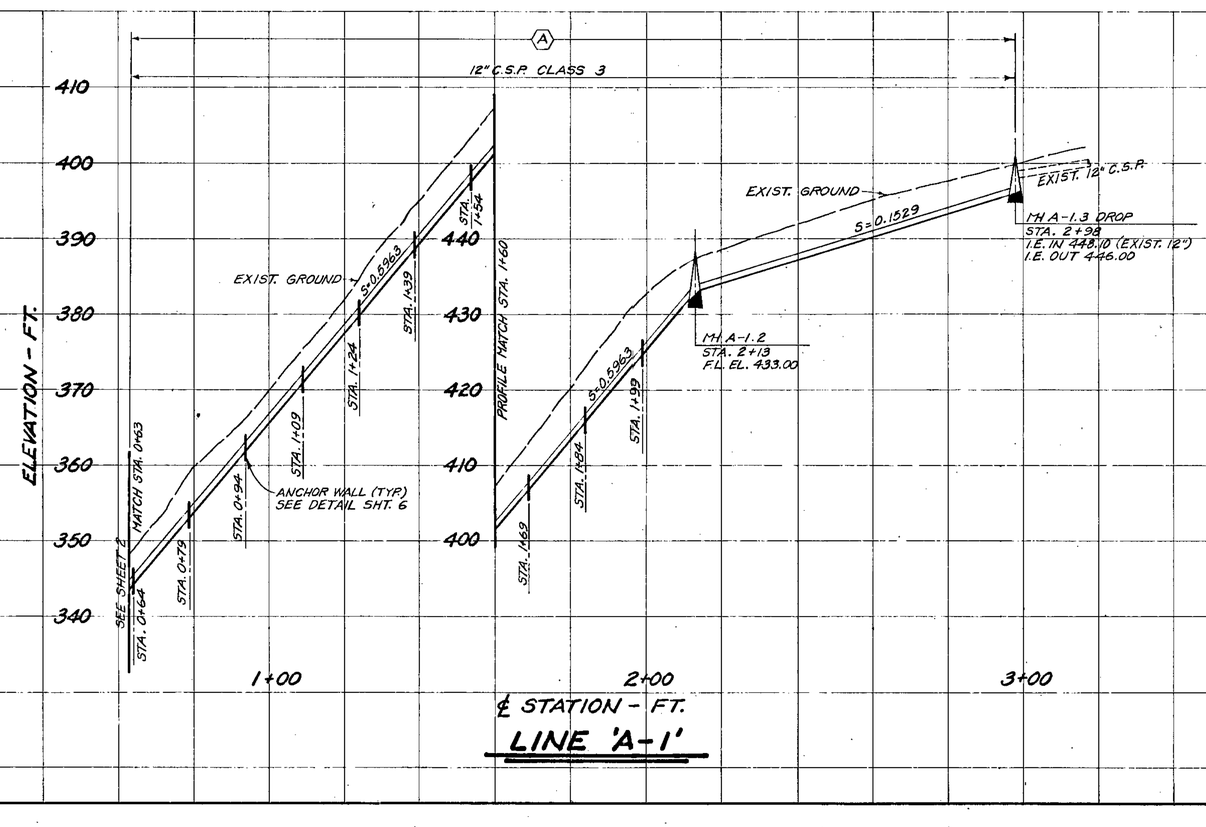

NO.	REVISION	BY	DATE

PLAN & PROFILE
LINE 'A.1' STA. 0+63 to END

SCALE 1" = 20' H.; 1" = 10' V. | DATE MARCH, 1983

CITY OF WEST LINN, OREGON
WILDERNESS DRIVE STORM SEWER

DESIGNED PHS | DRAWN RFD | CHECKED PHS

MURRAY, SMITH & ASSOCIATES, P.C.
Engineers / Planners
Harrison Square
1600 S.W. First, Suite 250
Portland, Oregon 97201
503-226-1570

MSA

REGISTERED PROFESSIONAL ENGINEER 7784 OREGON PHILIP H. SMITH

SHEET 5 of 7

FILE NO. 82-0037.02

CASCADE MICROFILM/PRECISION GRAPHICS, PORTLAND

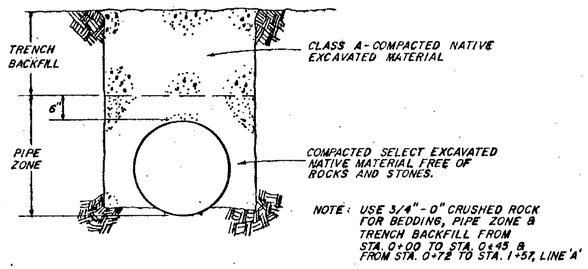

TYPICAL TRENCH SECTION

N.T.S.

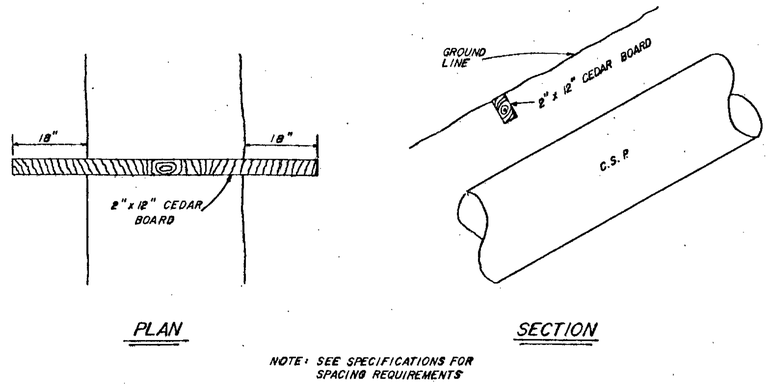

PLAN

SECTION

TRENCH SLOPE PROTECTION DETAIL

N.T.S.

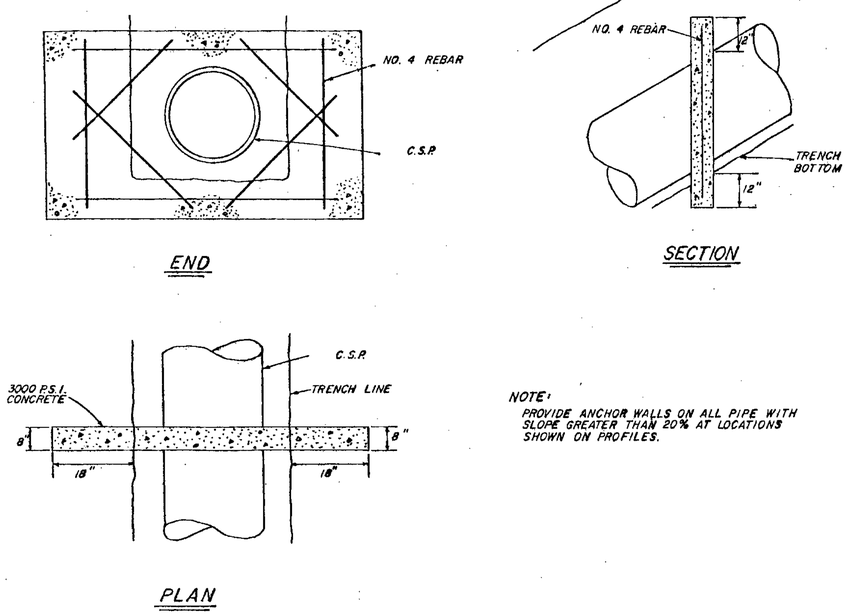

END

SECTION

PLAN

NOTE:
PROVIDE ANCHOR WALLS ON ALL PIPE WITH SLOPE GREATER THAN 20% AT LOCATIONS SHOWN ON PROFILES.

ANCHOR WALL DETAIL

N.T.S.

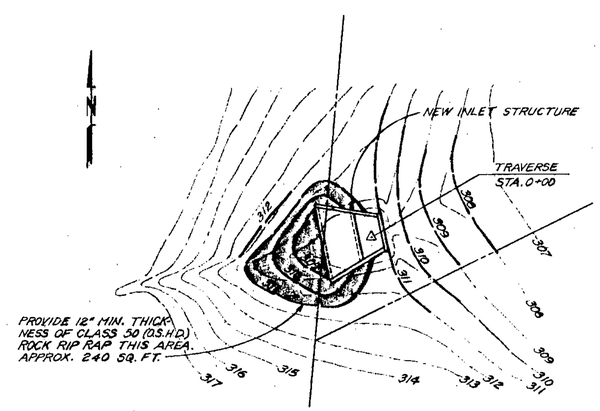

INLET STRUCTURE GRADING PLAN

SCALE: 1" = 10'

NO.	REVISION	BY	DATE

DETAILS

SCALE AS SHOWN | DATE MARCH, 1983

CITY OF WEST LINN, OREGON
WILDERNESS DRIVE
STORM SEWER

DESIGNED PHS. | DRAWN RFD | CHECKED HRM

MURRAY, SMITH & ASSOCIATES
Engineers / Planners
Harrison Square
1600 S.W. First Suite 500
Portland, Oregon 97201
503-225-9010

MSA

REGISTERED PROFESSIONAL ENGINEER
OREGON
PHILIP H. SMITH

SHEET
6 of 7

FILE NO.
82-0037.02

CASCADE MICROFILM/PRECISION GRAPHICS PORTLAND

NOTE:
TRASH RACK OMITTED FROM PLAN VIEW FOR CLARITY.

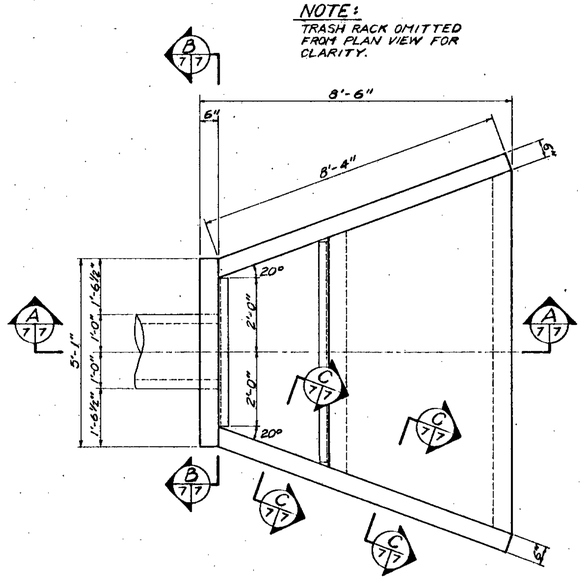

PLAN
SCALE: 1/2" = 1'-0"

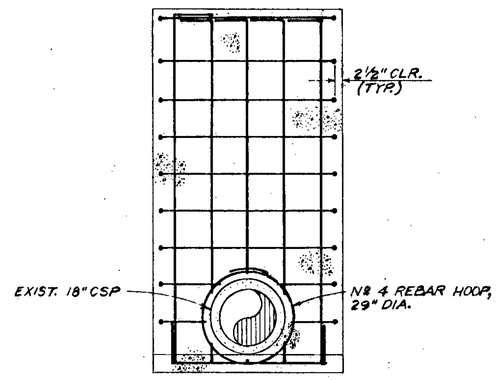

SECTION B
SCALE: 1/2" = 1'-0"

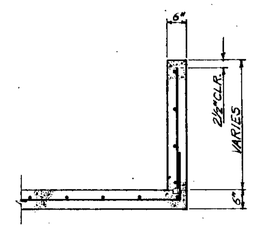

SECTION C
SCALE: 1/2" = 1'-0"

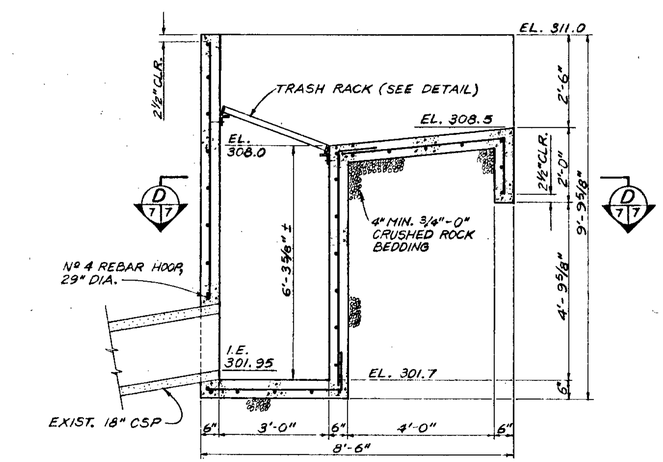

SECTION A
SCALE: 1/2" = 1'-0"

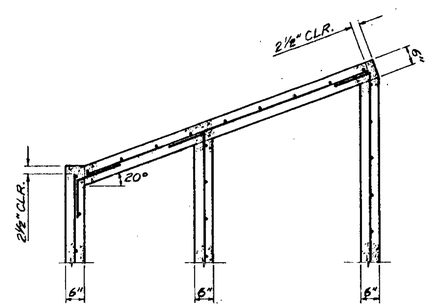

SECTION D
SCALE: 1/2" = 1'-0"

NOTES:

1. CONCRETE SHALL ATTAIN A MINIMUM COMPRESSIVE STRENGTH OF 3000 P.S.I. @ 28 DAYS.
2. PROVIDE 3/4" CHAMFER ON ALL EXPOSED CONCRETE EDGES.
3. ALL REINFORCING STEEL SHALL BE NO. 4 BAR @ 12"C.C. EACH WAY UNLESS NOTED OTHERWISE ON THE DRAWINGS.
4. ALL REINFORCING STEEL SHALL CONFORM TO ASTM A615, GRADE 40.
5. MINIMUM COVER OVER ALL REINFORCING STEEL SHALL BE 2½".
6. STRUCTURAL STEEL SHALL CONFORM TO ASTM A36.
7. MINIMUM REBAR LAP DISTANCE SHALL BE 20 TIMES BAR DIAMETER.
8. TRASH RACK SHALL BE HOT-DIP GALVANIZED AFTER FABRICATION. FIELD VERIFY DIMENSIONS PRIOR TO FABRICATION.

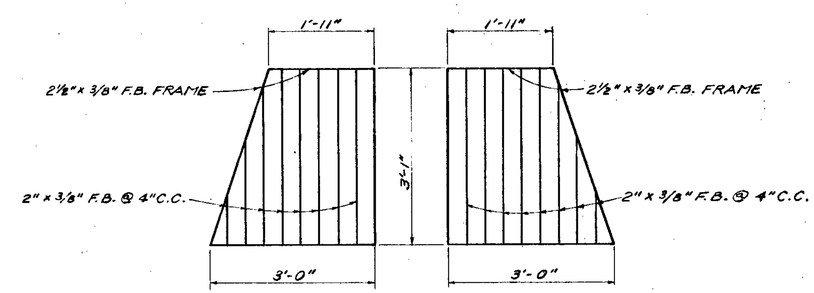

PLAN

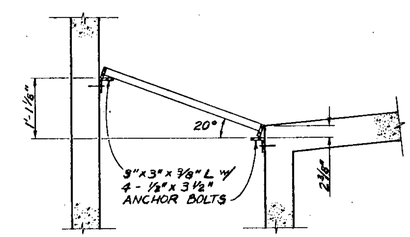

SECTION

TRASH RACK DETAIL
SCALE: 3/4" = 1'-0"

REGISTERED PROFESSIONAL ENGINEER 7754 OREGON JULY 13, 1973 PHILIP H. SMITH

NO.	REVISION	BY	DATE

INLET STRUCTURE DETAILS

CITY OF WEST LINN, OREGON
WILDERNESS DRIVE
STORM SEWER

DESIGNED PHS | DRAWN RFD | CHECKED HRM | SCALE AS SHOWN | DATE MARCH, 1983

MSA
MURRAY, SMITH & ASSOCIATES, Engineers / Planners
Harrison Square
1800 S.W. First Suite 510
Portland, Oregon 97201
503-225-9010

SHEET
7 of 7
FILE NO.
82-0037.02

CASCADE MICROFILM/PRECISION GRAPHICS, PORTLAND