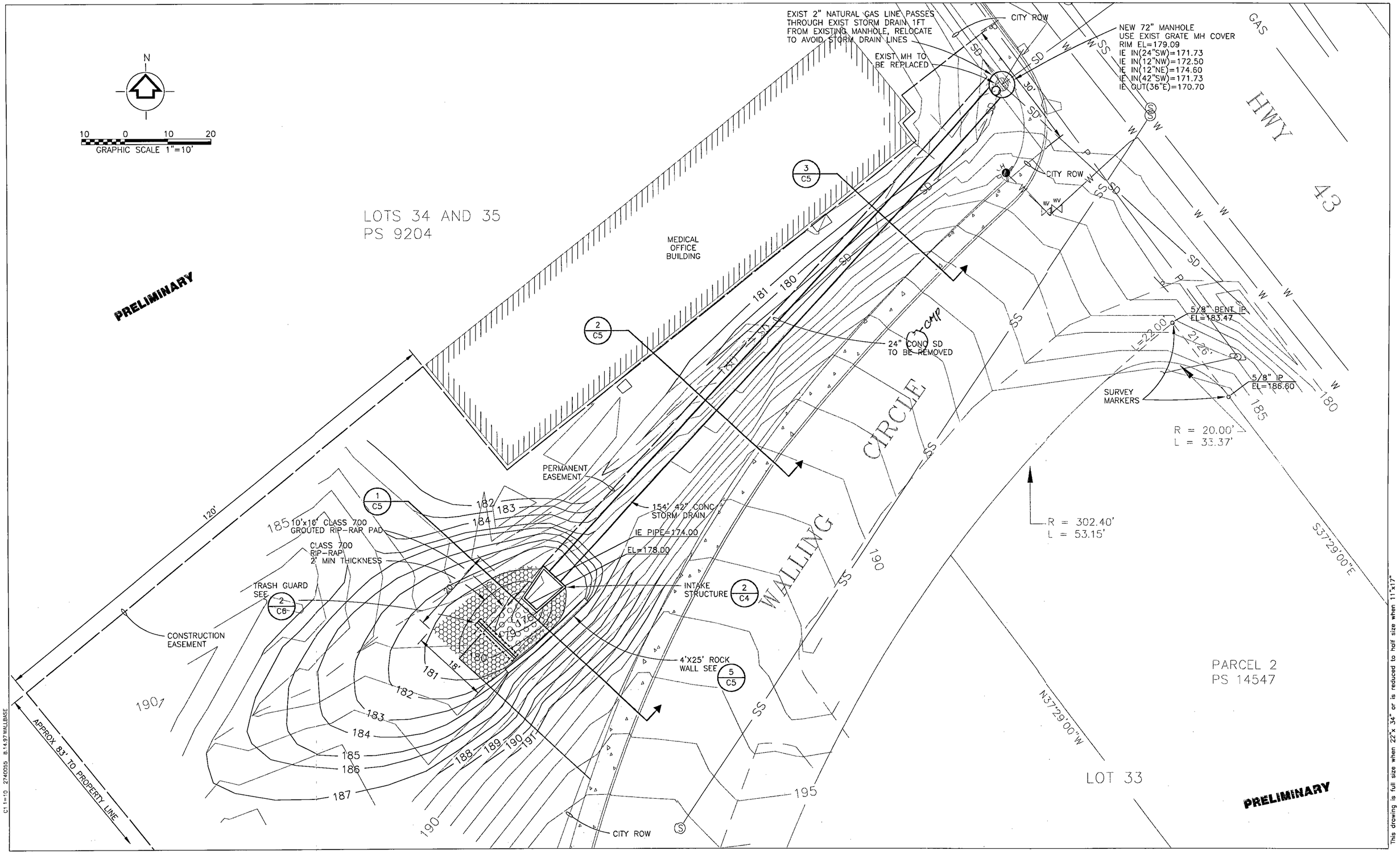

KCM
KCM, Inc.
7080 SW Fir Loop
Portland, Oregon 97223

date AUG 1997	designed by JAM	
	drawn by DPM	
scale AS NOTED	checked by JDM	
	approved by JDM	

revisions	City of West Linn, Oregon WALLING CIRCLE CULVERT REPLACEMENT PROJECT NO. CI-96-11	CIVIL PLAN	drawing number C1
KCM NO. 2740055			sheet number 2 of 7

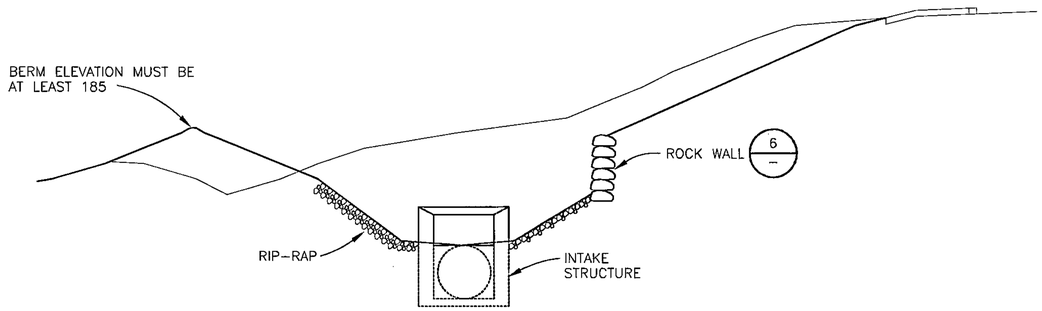

SECTION 1
1"=5'
1 / C1

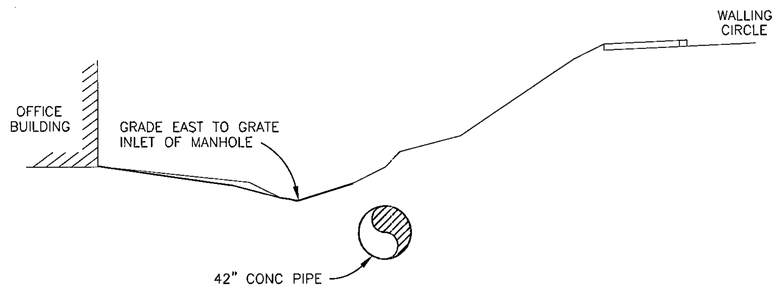

PRELIMINARY

SECTION 2
1"=5'
2 / C1

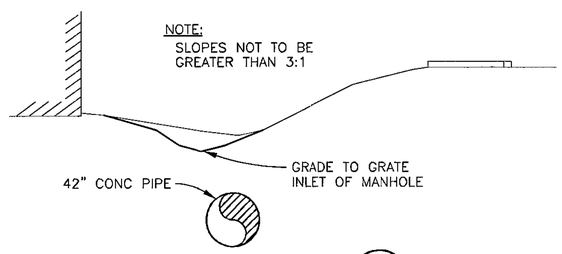

SECTION 3
1"=5'
3 / C1

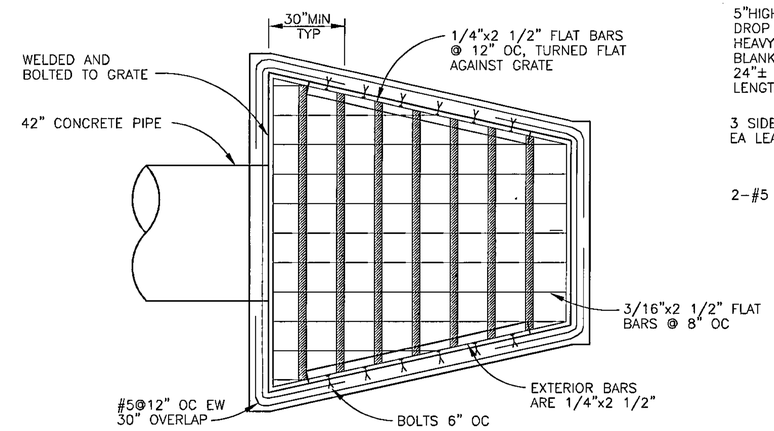

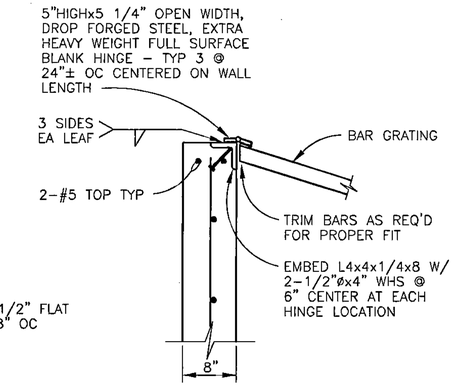

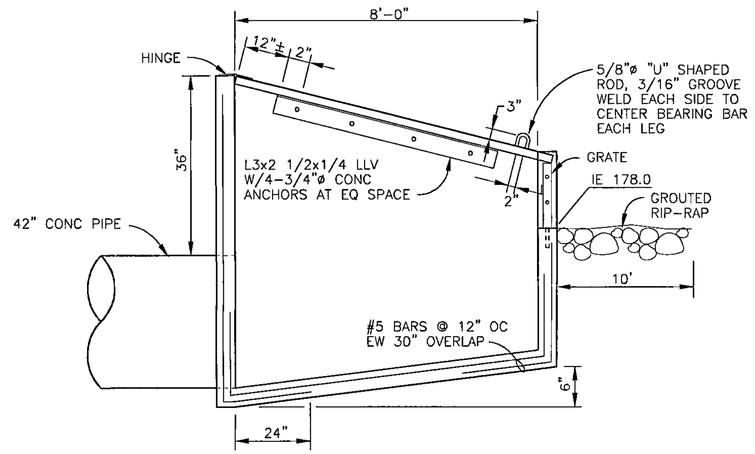

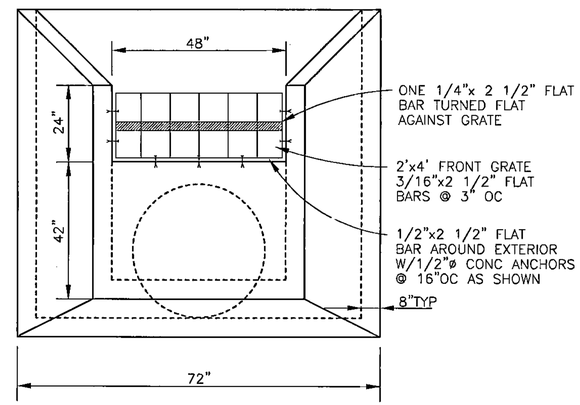

WALLING CIRCLE INTAKE STRUCTURE
NO SCALE
4 / –

PRELIMINARY

This drawing is full size when 22"x 34" or is reduced to half size when 11"x17"

C6 1=5 2740055 8.14.97

KCM, Inc.
7080 SW Fir Loop
Portland, Oregon 97223

date	designed by	JAH
AUG 1997	drawn by	DPM
scale	checked by	JDM
AS NOTED	approved by	JDM

revisions	City of West Linn, Oregon 1997 STORM WATER CAPITAL IMPROVEMENT PROJECTS CI-96-11, CI-96-13, CI-96-14	CIVIL SECTIONS AND DETAILS	drawing number C6
KCM NO. 2740055			sheet number of