WES Force Main

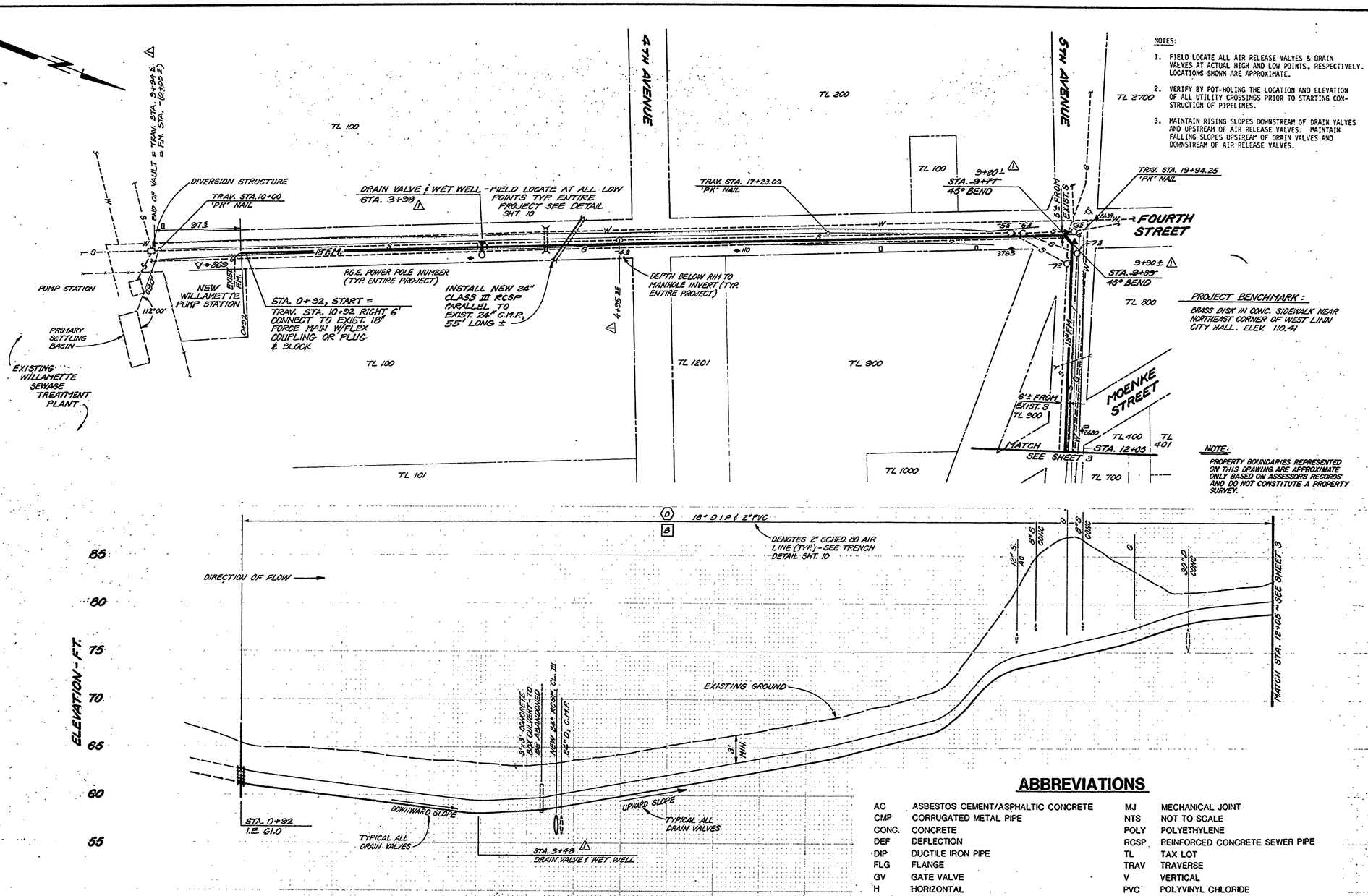

NOTES:

1. FIELD LOCATE ALL AIR RELEASE VALVES & DRAIN VALVES AT ACTUAL HIGH AND LOW POINTS, RESPECTIVELY. LOCATIONS SHOWN ARE APPROXIMATE.
2. VERIFY BY POT-HOLING THE LOCATION AND ELEVATION OF ALL UTILITY CROSSINGS PRIOR TO STARTING CONSTRUCTION OF PIPELINES.
3. MAINTAIN RISING SLOPES DOWNSTREAM OF DRAIN VALVES AND UPSTREAM OF AIR RELEASE VALVES. MAINTAIN FALLING SLOPES UPSTREAM OF DRAIN VALVES AND DOWNSTREAM OF AIR RELEASE VALVES.

ABBREVIATIONS

AC	ASBESTOS CEMENT/ASPHALTIC CONCRETE	MJ	MECHANICAL JOINT
CMP	CORRUGATED METAL PIPE	NTS	NOT TO SCALE
CONC.	CONCRETE	POLY	POLYETHYLENE
DEF	DEFLECTION	RCSP	REINFORCED CONCRETE SEWER PIPE
DIP	DUCTILE IRON PIPE	TL	TAX LOT
FLG	FLANGE	TRAV	TRAVERSE
GV	GATE VALVE	V	VERTICAL
H	HORIZONTAL	PVC	POLYVINYL CHLORIDE

REGISTERED PROFESSIONAL ENGINEER 2254 OREGON JULY 13, 1973 PHILIP H. SMITH

NO.	RECORD DRAWING REVISION	BY	DATE
		KPT	11/26/86

PLAN & PROFILE STA. 0+00 to 12+05

SCALE 1"=50'H, 1"=5'V. | DATE FEB, 1986

TRI-CITY SERVICE DISTRICT
CLACKAMAS COUNTY, OREGON
WEST LINN FORCE MAIN AND GRAVITY SEWER

DESIGNED NLV | DRAWN RFD | CHECKED PHS

MURRAY, SMITH & ASSOCIATES, INC.
Engineers / Planners
Suite 300 Yeon Building
522 S.W. Fifth Avenue
Portland, Oregon 97204
(503) 225-9010

MSA

SHEET 2 of 17

FILE NO. 83-0066.20

SHEET FM7

WES Force Main

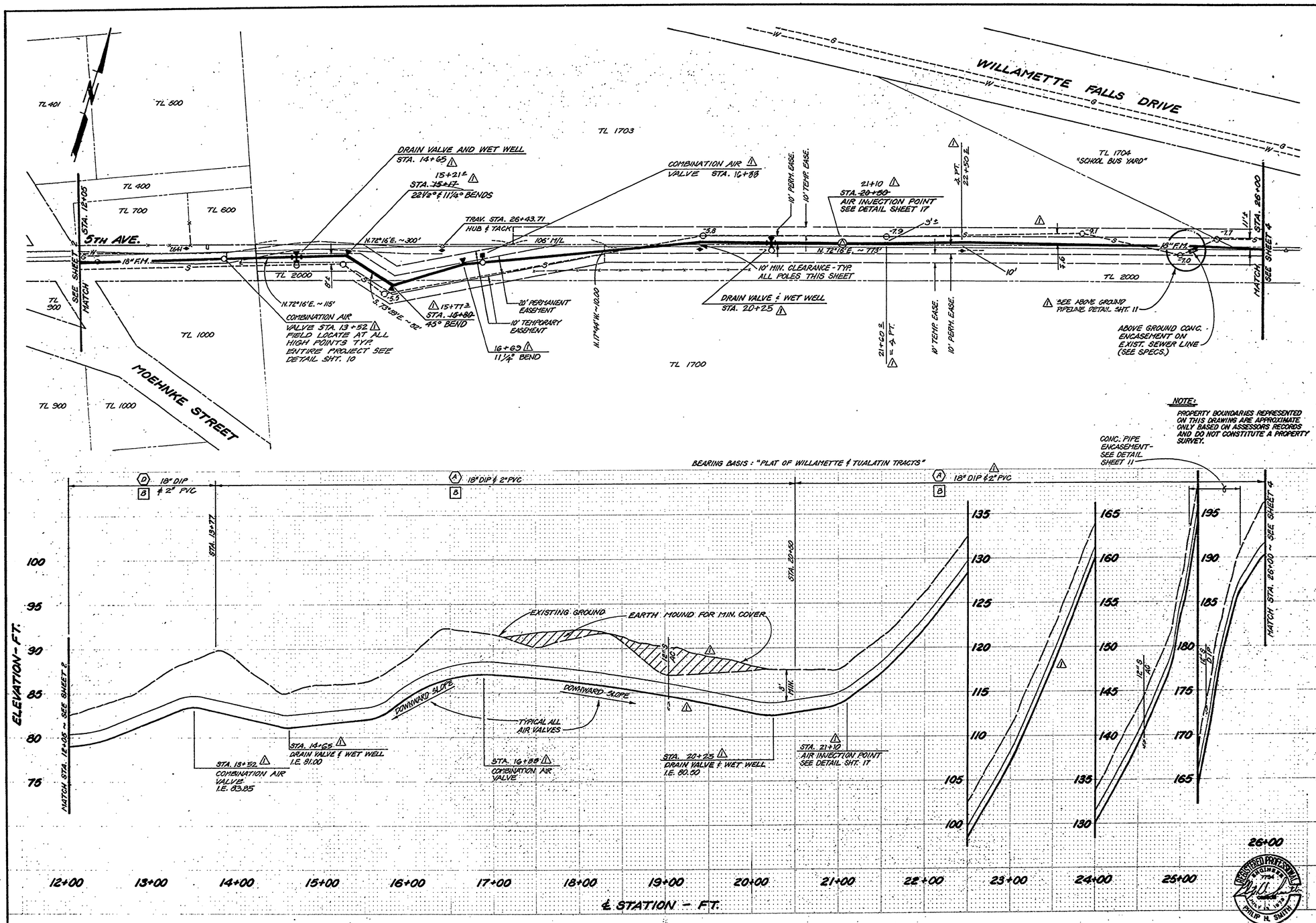

NO.	REVISION	BY	DATE
1	RECORD DRAWING	KPM	12-1-86

PLAN & PROFILE
STA 12+05 to 26+00

SCALE 1" = 50' H., 1" = 5' V. DATE FEB., 1986

TRI-CITY SERVICE DISTRICT
CLACKAMAS COUNTY, OREGON
WEST LINN FORCE MAIN
AND GRAVITY SEWER

DESIGNED NLV DRAWN RFD CHECKED PHS

MURRAY, SMITH & ASSOCIATES
Engineers / Planners
Harrison Square
1800 S.W. First, Suite 510
Portland, Oregon 97201
503-225-9010

MSA

SHEET 3 of 17
FILE NO. 83-0066.20

REGISTERED PROFESSIONAL ENGINEER 7794 OREGON JULY 13, 1978 PHILIP H. SMITH

SHEET FM8

WES Force Main

W.E.S Force Main Details

'R PROOF FRAME & COVER

1S REQ'D

W/FRP. BOTTOM

:-OUT FIBERGLASSED INTO MH ⚠

7 →

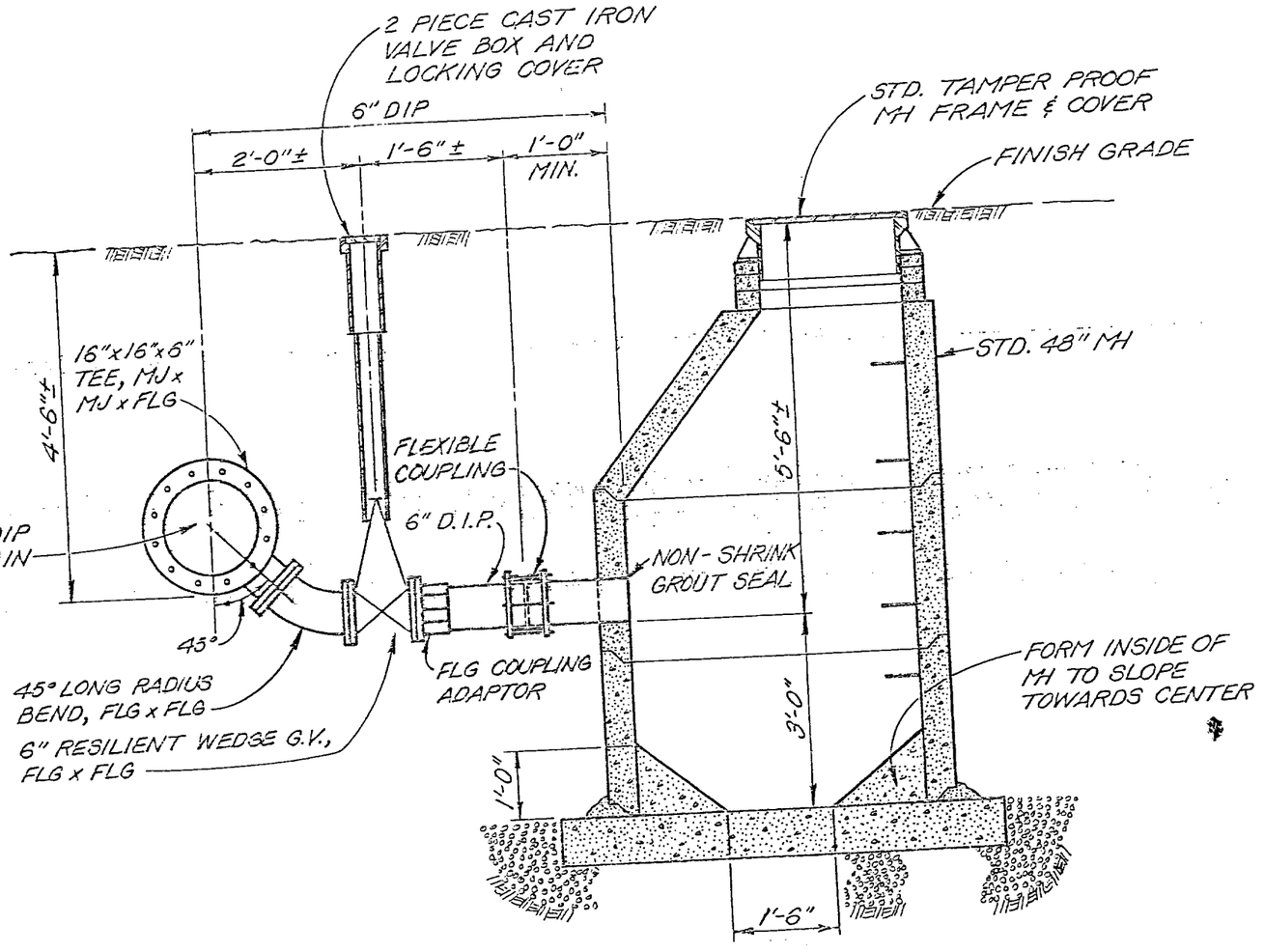

FORCE MAIN DRAIN VALVE AND WET WELL DETAIL

N.T.S.

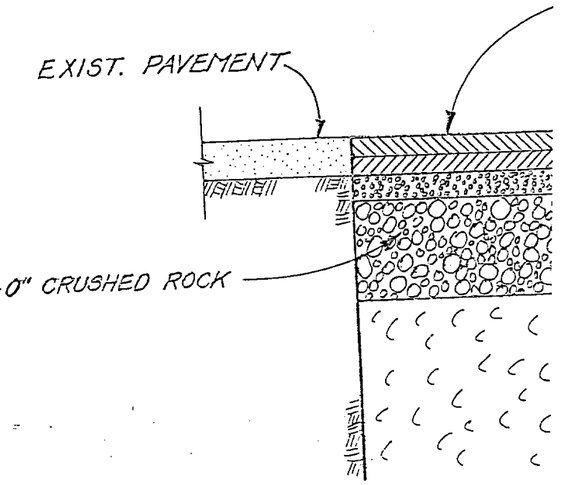

TYPICAL SUR

N.T.

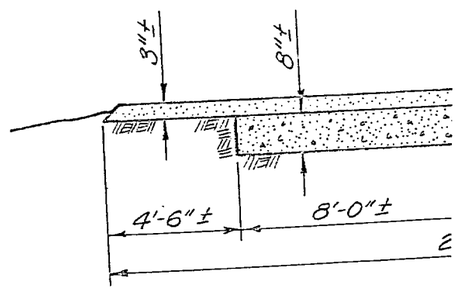

EXIST. WILLAMET CONCRETE ROAD

N.T.S

'AIL

COVER

OUND

OUT - TYP.

4'-6" COVER

ST MH SECTIONS

CKFILL

VC - PIPE & FITTINGS

TYPE 'A' ANCHORS *					
PIPE SIZE	(DEG.) V.B.	CU. FT. CONC.	(FT.) S	(IN.) d	(FT.) L

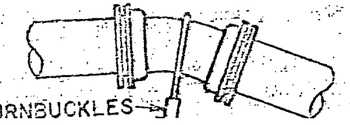

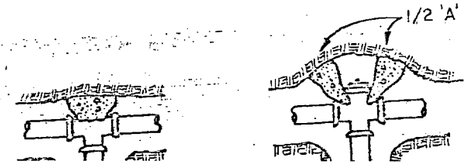

CAST-IN-PLACE BASE
(PRE-CAST BASE W/
KNOCKOUTS OPTIONAL)
N.T.S.

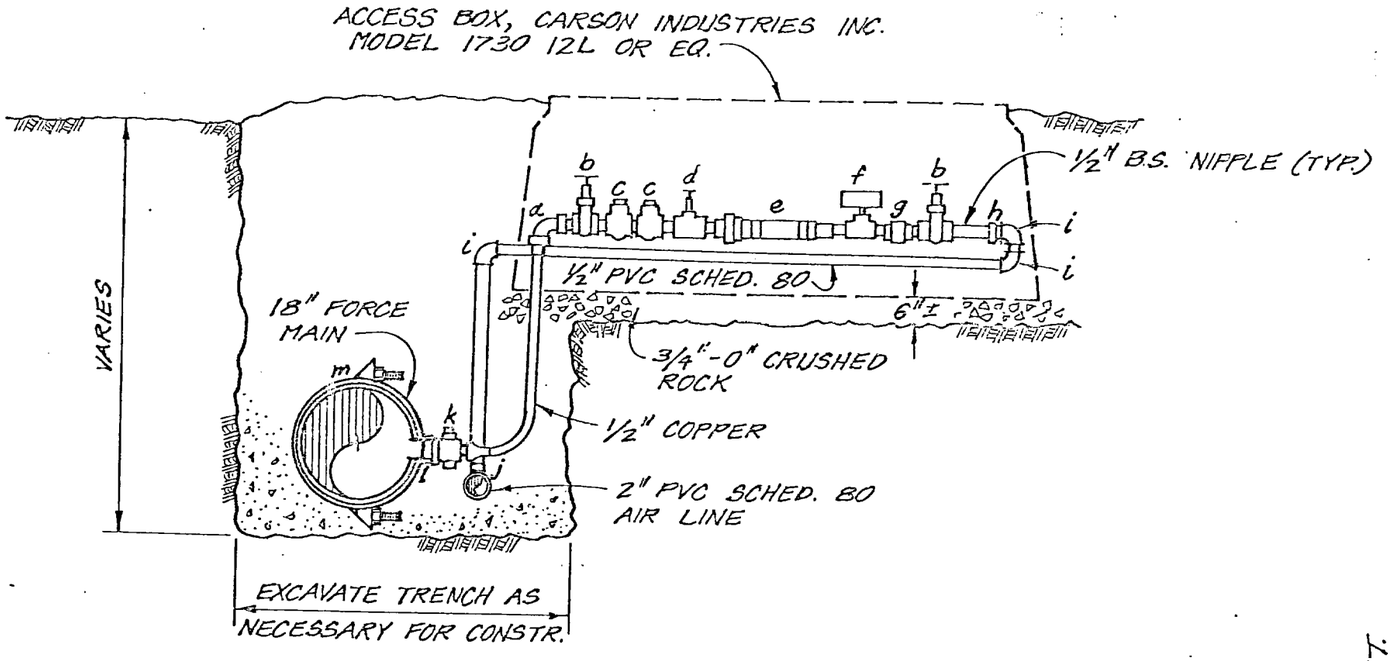

a - ½" COPPER TO F.I.P.T. ELBOW
b - ½" GATE VALVE
c - ½" CHECK VALVE, BRONZE
d - ½" NEEDLE VALVE, REGO/M&M, MICRO-FLO KLN 500 OR EQ.
e - ½" FLOW METER, HEDLAND 671-050 OR EQ.
f - ½" TEE W/RDCR. & PRESS. GAUGE 0-100 PSI
g - ½" UNION
h - ½" SLIP X F.I.P.T. CPLG. PVC
i - 2" X 2" X ½" SLIP X SLIP ELBOW PVC
j - 2" X 2" X ½" (OR 1" X 1" X ½") SLIP X SLIP X SLIP TEE OR 2" X 2" (OR 1" X 1") ELBOW & RDCR @ LINE END
k - ½" CORPORATION STOP, BRASS
l - 3/4" X ½" RDCR. BUSHING
m - 3/4" DOUBLE STRAP TAPPING SADDLE, ROCKWELL OR EQ.

AIR INJECTION VAULT DETAIL

N.T.S.

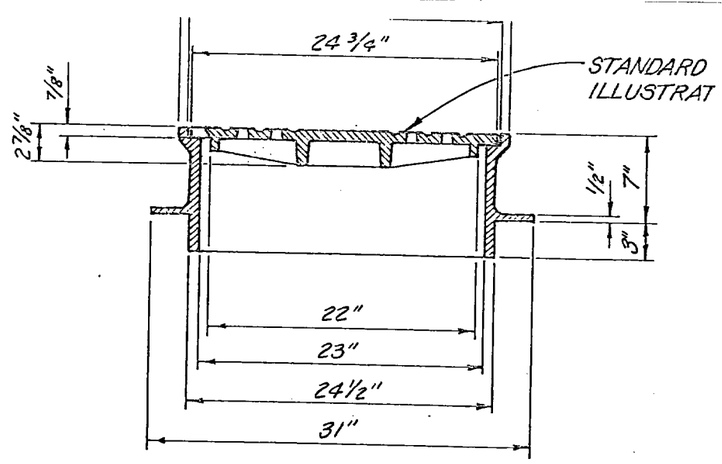

MANHOLE FRAME & COVER

N.T.S.

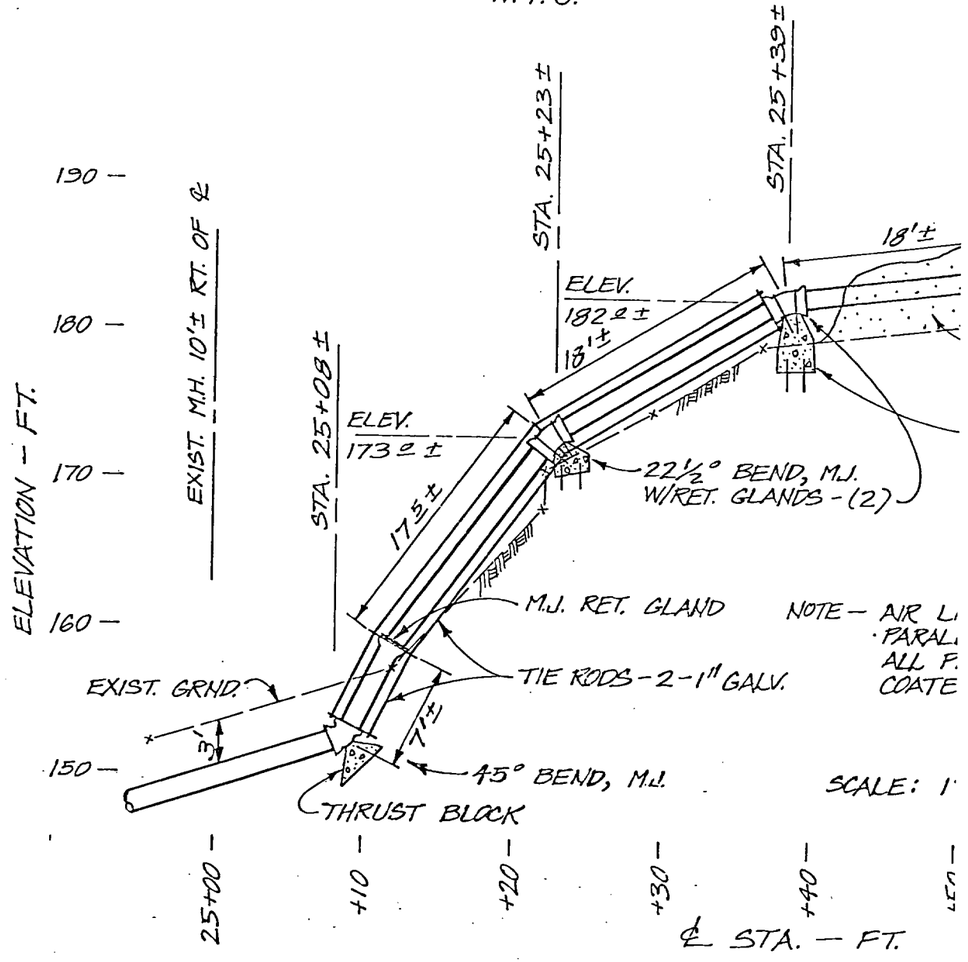

ABOVE GROUND PIPELINE

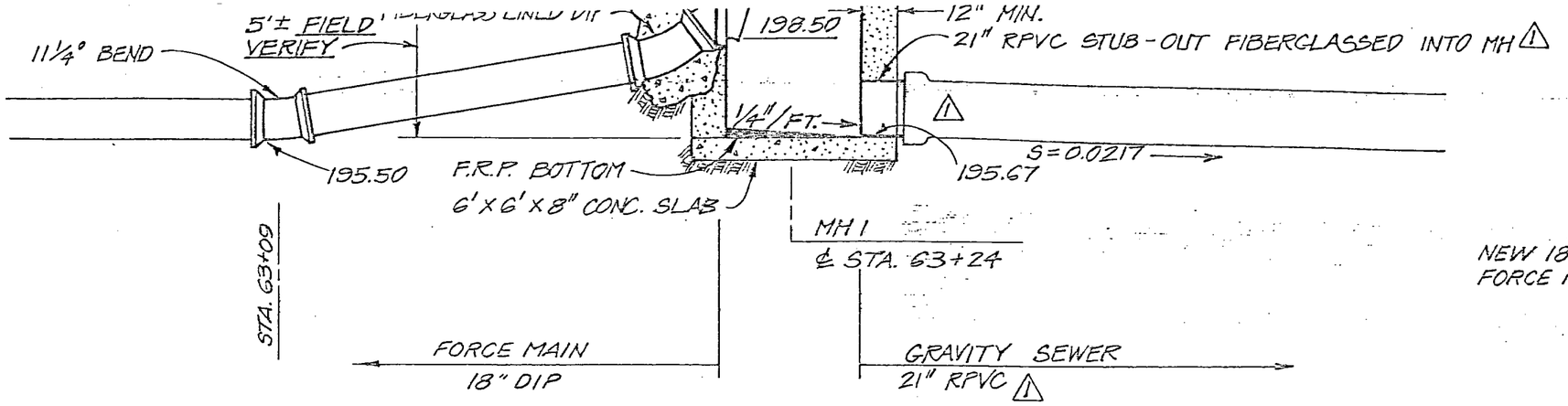

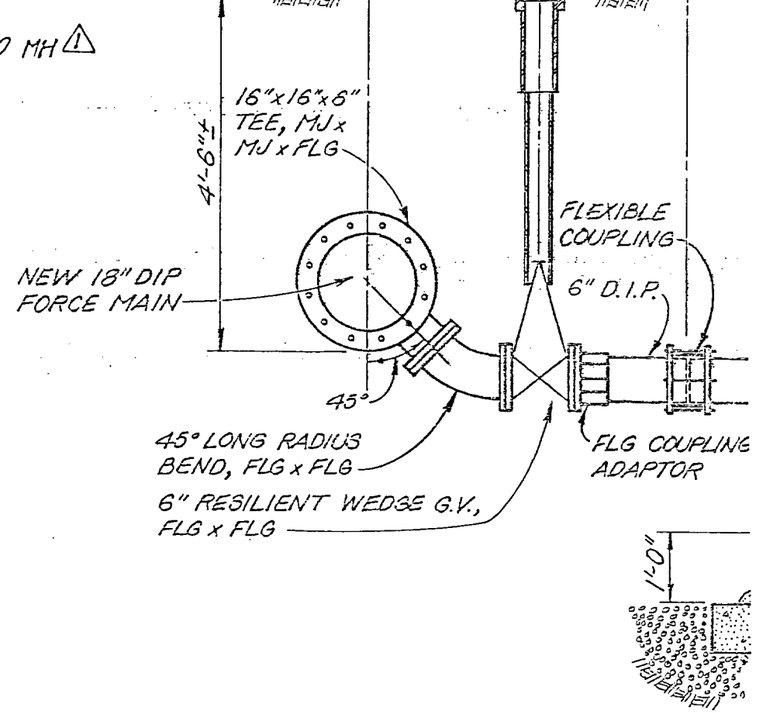

FORCE MAIN OUTFALL DETAIL

SCALE: 1/4" = 1'-0"

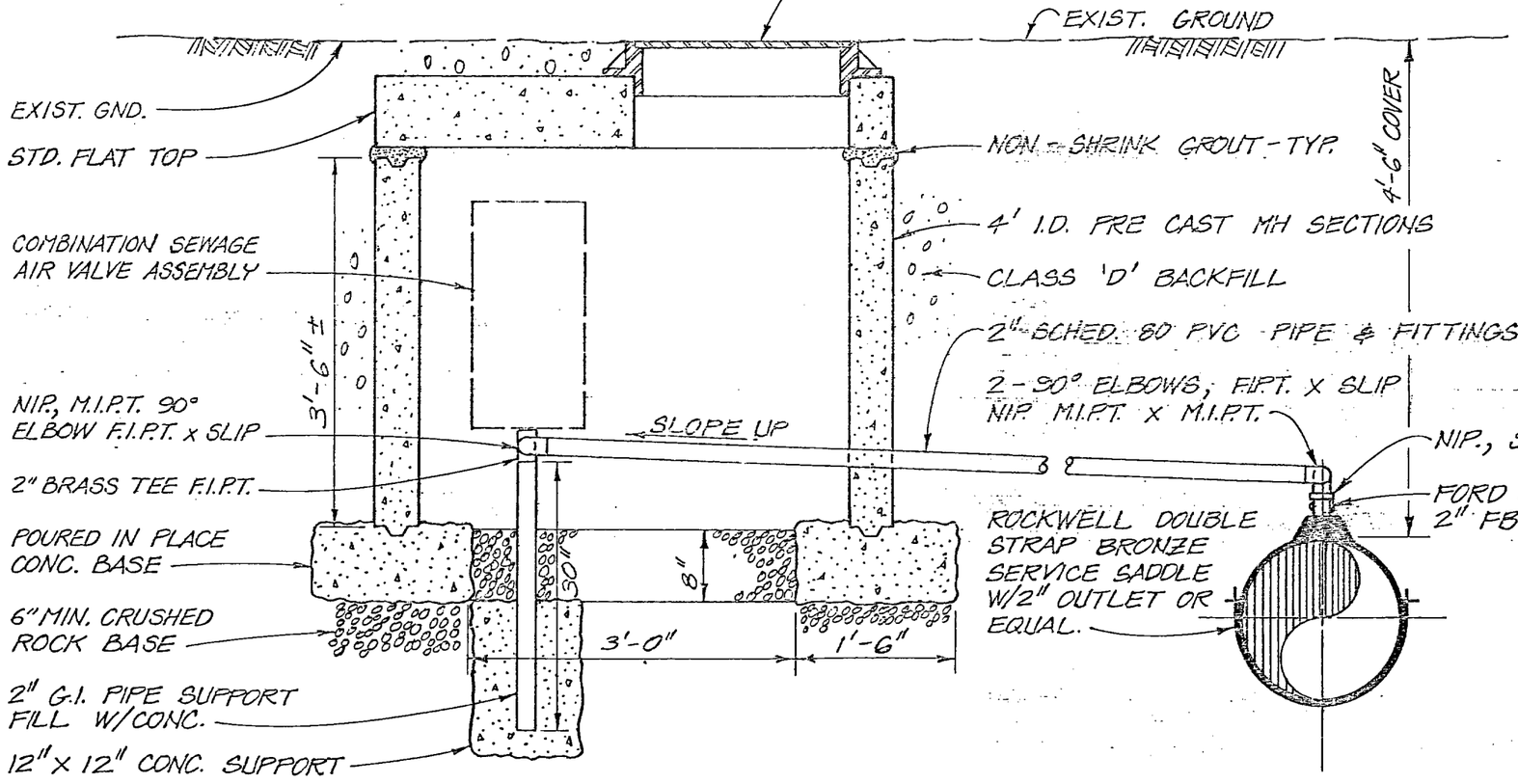

COMBINATION AIR VALVE DETAIL

FORCE MAIN AND WET W

N. 7

TYPE 'A' ANCHORS *					
PIPE SIZE	(DEG.) V.B.	CU. FT. CONC.	(FT.) S	(IN.) d	(FT.) L
4	11-1/4	6	1.8	1/2	1.0
	22-1/2	12	2.3	1/2	1.5
6	11-1/4	12	2.3	1/2	1.5
	22-1/2	24	2.9	1/2	1.5
8	11-1/4	21	2.8	1/2	1.5
	22-1/2	41	3.4	1/2	1.5
10	11-1/4	31	3.1	1/2	1.5
	22-1/2	62	3.9	5/8	2.0
12	11-1/4	45	3.6	1/2	1.5
	22-1/2	87	4.4	3/4	2.0
14	11-1/4	60	3.9	5/8	2.0
	22-1/2	117	4.9	7/8	2.5
16	11-1/4	77	4.3	3/4	2.0
	22-1/2	152	5.3	7/8	2.5
18	11-1/4	97	4.6	3/4	2.0
	22-1/2	190	5.7	1	3.0
20	11-1/4	119	4.9	7/8	2.5

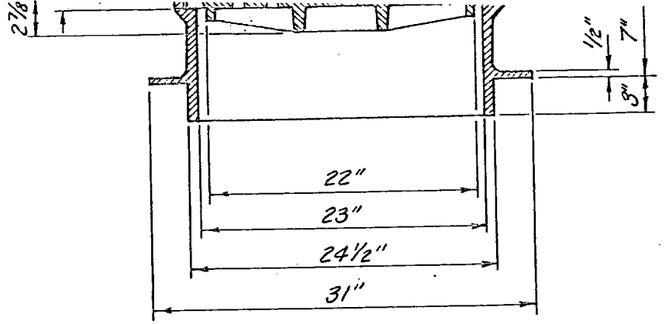

(TYP.)

MANHOLE FRAME & COVER

N.T.S.

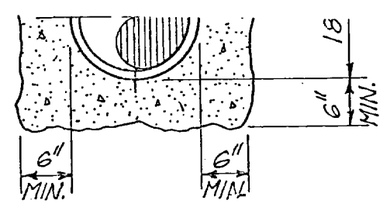

PIPE ENCASEMENT DET.

N.T.S.

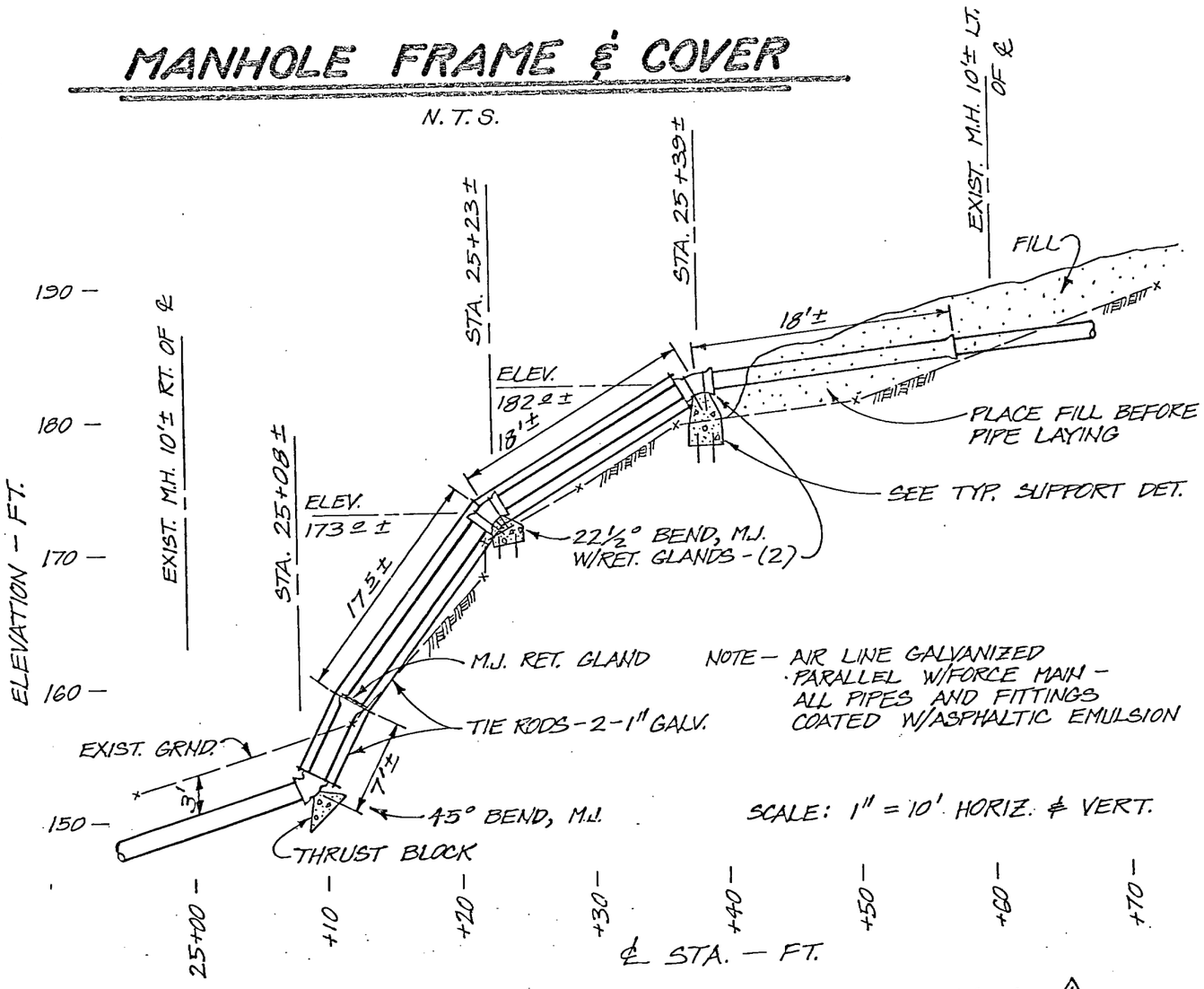

ABOVE GROUND PIPELINE DETAIL △1

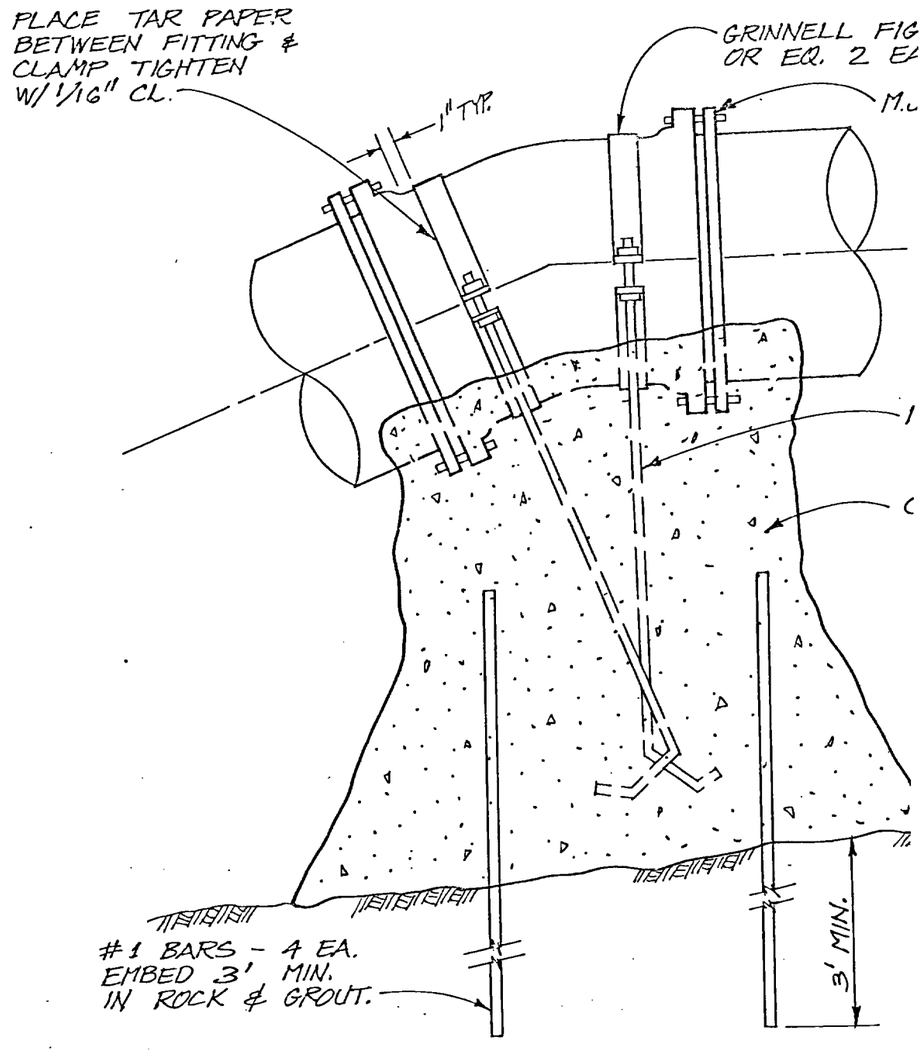

TYPICAL SUPPORT DE

N.T.S.

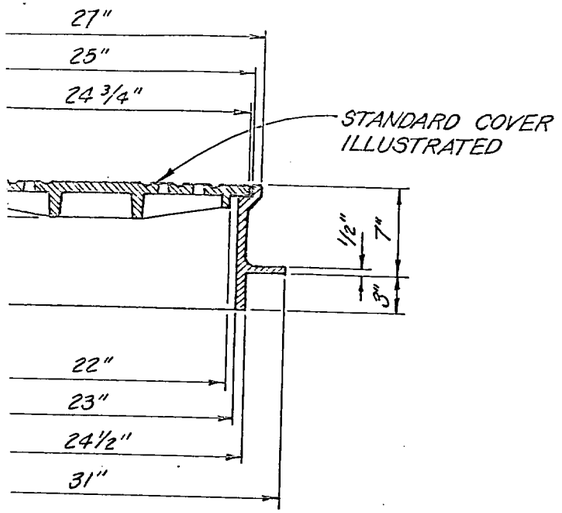

RAME & COVER

T. S.

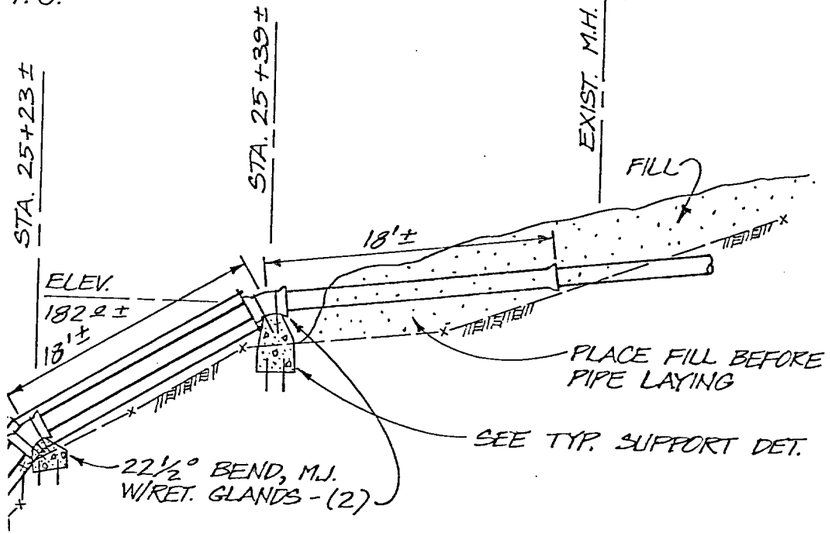

M.J. RET. GLAND

TIE RODS - 2 - 1" GALV.

BEND, M.J.

NOTE - AIR LINE GALVANIZED PARALLEL W/FORCE MAIN - ALL PIPES AND FITTINGS COATED W/ASPHALTIC EMULSION

SCALE: 1" = 10' HORIZ. & VERT.

+30 — +40 — +50 — +60 — +70 — +80 —

℄ STA — FT

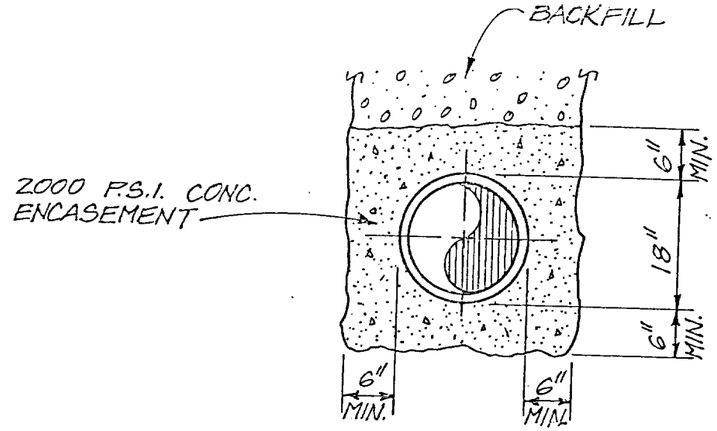

PIPE ENCASEMENT DETAIL
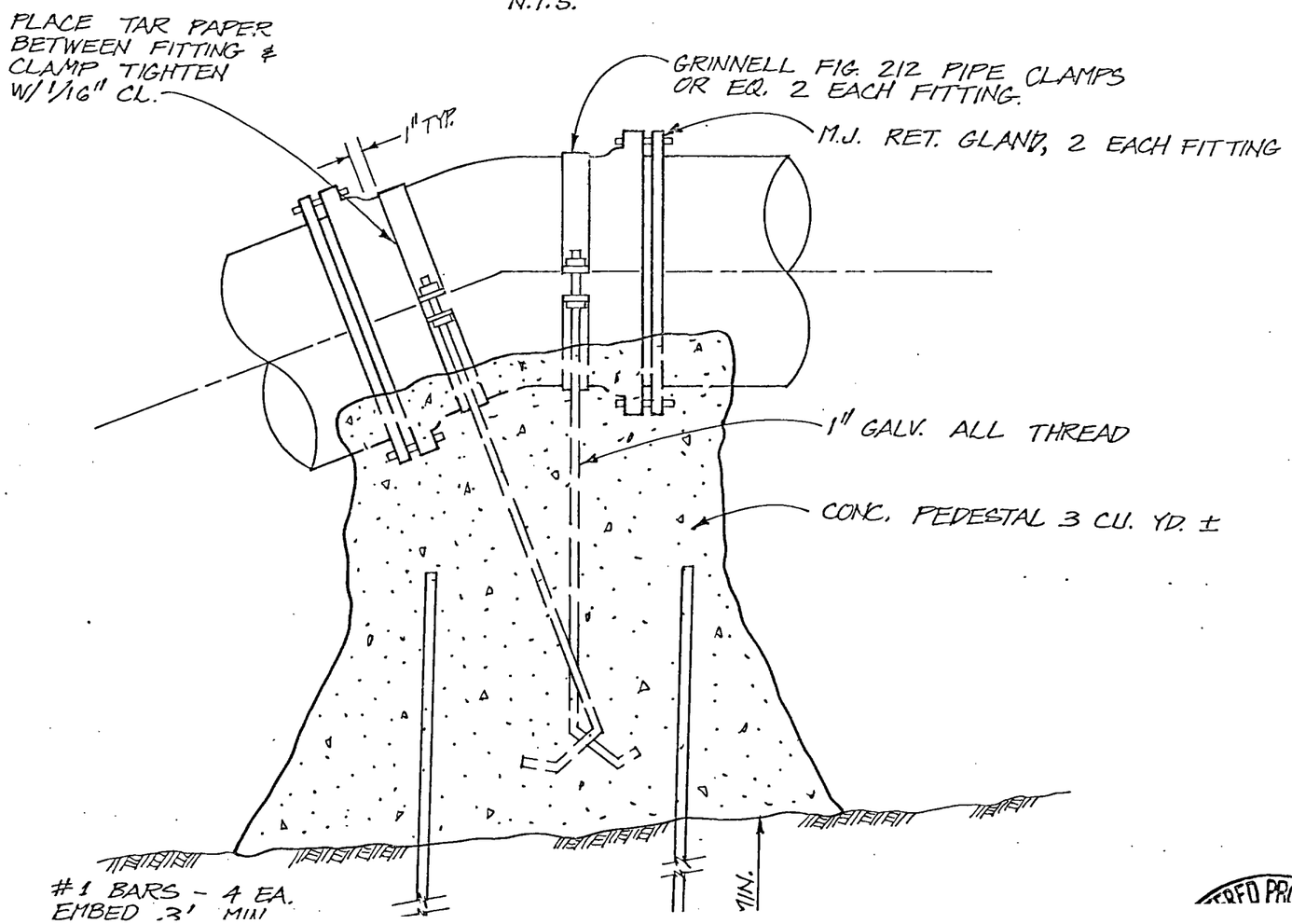
N.T.S.