UMPQUA HEIGHTS

LEGAL DESCRIPTION

T2S, R1E, SECTION 35A, T.L. 1500

DEVELOPED BY

RENAISSANCE DEVELOPMENT CORPORATION

JUNE 1999

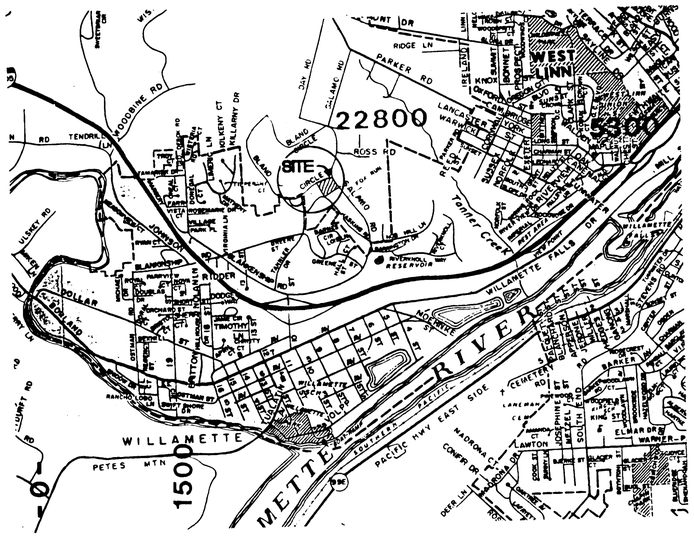

SISUL ENGINEERING

375 PORTLAND AVE.
GLADSTONE, OR. 97027
(503) 657-0188

CONDITIONS OF APPROVAL

1. The 15-foot accessway to the bio-swale located between lots 12 and 13 shall be an all-weather road with a 15-foot driving surface. The road shall have a maximum 12% grade and have a minimum radii of 25 feet. The road shall extend to the farthest limits of each tank to provide the ability to park adjacent to the farthest access manholes. The City Engineer shall approve the design of the road.

2. The applicant shall submit a revised and detailed erosion control plan and narrative that is consistent with the *"Erosion Prevention and Sediment Control Plans Technical Guidance Handbook"* prepared by Clackamas County Department of Utilities (August 1994). The plan shall be submitted with the building plans and must be approved by the City prior to site work. Additional attention shall be given to erosion control on eastern edge of drainage during sidewalk installation.

3. Removal of invasive species from the natural drainageway shall not occur on or between the months of November through March. The applicant shall notify the Parks Department prior to spraying and planting the drainageway in order to get approval of herbicides. The applicant shall not replant during summer months when survival rate is low due to little irrigation.

4. Once utility work is complete in the 15-foot utility easement behind lots 11, 14, 15, and 16, the applicant shall replant the easement with an approved grass species to create a temporary vegetated buffer zone between the development and the drainageway.

5. Additional right-of-way shall be dedicated to provide a 30-foot half-street right-of-way for Bland Circle. Bland Circle improvements shall include curb and gutter, sidewalk, and additional paved street to provide a 16-foot wide half street. Street improvements shall be extended to the east as far as the intersection with Salamo Road.

6. Sidewalks on Bland Circle shall conform to the Parks Department 1998 Trails Master Plan which calls for a trail along Bland Circle. A 6 foot sidewalk shall be installed along the western edge of Salamo, beginning at the intersection of Bland Circle and Salamo and continuing south to the end of the site. The new sidewalk shall border with the existing curb along Salamo since a 6 foot planter strip shall not be required.

7. The applicant shall plant street trees along Bland Circle. The species to be determined by the City Arborist.

8. The waterline in Kensington Court shall be extended and looped to the 10-inch waterline located in Bland Circle.

9. The applicant shall install storm water detention facilities for lots 1 through 6 which meet the requirements for a 25-year pre-development and post-development runoff event.

10. The applicant shall install pollution control manholes according to City Engineer's direction.

11. The applicant shall clearly delineate the dripline plus 10-foot radius with orange fencing around the 22-inch Douglas Fir in order to preserve the root system during the construction of the bio-swale. The applicant shall preserve and delineate with orange fencing, all deciduous trees on lots 6, 14, 15, and 16 if possible, otherwise, an inch by inch replacement along Tract A will be in order.

INDEX

SHEET	*DESCRIPTION*
1	SPECIFICATIONS
2	TREE IMPACT PLAN
3	WATERLINE PLAN
4	SANITARY SEWER PLAN
5	STREET AND STORM DRAIN PLAN
6	STREET AND STORM DRAIN PLAN
7	DETENTION POND DETAILS
8	GRADING AND EROSION CONTROL PLAN
9	CROSS SECTIONS
10	RETAINING WALL PROFILES
11	RETAINING WALL DETAILS
12	DETAILS

AS BUILTS

MOST RECENT REVISION TO THIS SET OF PLANS:

5/16/00 AS-BUILT

UMPQUA HEIGHTS

Water Supply

1. Water mains shall be ductile iron pipe conforming to AWWA C151 Class 52. Pipe is to have cement mortar lining and bituminous seal coat conforming to AWWA C104. Joints are to be push-on joint. Pipe fittings are to be of the same material and class as pipe and of domestic origin.
2. Water mains to have a minimum cover of 36".
3. Thrust blocks are to be provided at all changes in direction and branches. Thrust blocking concrete strength is to be 2000 psi. See details for thrust block sizing. Pour thrust blocks against undisturbed earth.
4. Gate valves shall be a double disc type conforming to AWWA C500. Butterfly valves shall be Class 150 B short body type in conformance with AWWA C504. Valve boxes shall be Rich Model 925 or equal.
5. Fire hydrants shall conform to and shall be installed in accordance with APWA Division IV, Section 404. Pumper outlet is to face the direction of access.
6. Granular backfill (3/4"-0) is to be compacted to 95% maximum dry density per AASHTO T 99 test method and native material shall be compacted to 85% of in-place dry density of surrounding soil. Backfill under streets shall be in accordance with Class 'B' backfill as indicated on the detail sheet of the plans. Excavation, bedding and backfill shall be in accordance with APWA Division IV, Section 401.
7. Service laterals shall be type K. Lateral sizes shall be 1". For double services two 1" water services shall be laid side by side. Corporation stops shall be Ford or approved equal. Curb stop shall be 1" Ford meter stop. Meter boxes shall be equal to Brooks #37. Meter boxes are to be installed 3/4" above finish grade.
8. All waterlines will be pressure tested and purification tested before connection to the city water system. Pressure test shall be conducted at 180 psi and shall meet the requirements of APWA, Division IV, Section 402.3.04.
9. Disinfection shall conform with APWA Division 4, Section 402.3.05.
10. Do not connect new pipe to existing pipe prior to testing. The City of West Linn requires acceptance of new waterline prior to connection to existing water system.
11. A plumbing permit from the City of West Linn Building Department is required for service lateral installations beyond the water meter.
12. All materials, installation, tests, and chlorination to be in strict accordance with APWA's Standard Specifications for Public Works Construction, the supplemental standards and codes of the City of West Linn, and the Oregon State Health Division Administrative Rules, Chapter 333.

West Linn 8-10-98

Sanitary Sewer:

1. Pipe shall be PVC sewer pipe conforming to ASTM D-3034-SDR 35. Minimum stiffness shall be 46 psi and joint type shall be elastomeric gasket conforming to ASTM D-3212.
2. Manhole base shall be poured in-place concrete base with a minimum compressive strength of 2500 psi or precast. Manhole risers and tops shall be precast sections with minimum compressive strength of 4000 psi. Tops shall be eccentric cones except where insufficient headroom requires flat tops. Inverts shall be constructed so as to provide smooth flow-through characteristics. PVC pipe shall be connected to manhole by means of an elastomeric gasket, an approved waterstop, or flexible sleeve. Cement grout for connecting PVC sewer pipe to manhole will not be permitted.
3. All manholes located in easement areas require tamper proof lids. All manhole rims not in pavement area to be set 12 inches above proposed grade.
4. Cleanout pipe, fittings, and joints shall be the same specifications as for pipe. Castings are as shown on detail and shall conform to ASTM A48 (Grade 30). Cleanout riser shall match downstream pipe diameter.
5. Granular backfill (3/4"-0) is to be compacted to 95% maximum dry density per AASHTO T-99 test method and native material shall be compacted to 85% of in-place dry density of surrounding soil.
6. PVC service laterals shall be 4" pipe conforming to the same specifications as the sewer mains. Service laterals shall be installed to a point beyond the line of the sewer or utility easement as shown on the plan. The service lateral shall be plugged with a 4" rubber ring plug, and the location of the lateral's end marked with a 2" x 4" stake painted green.
7. Sanitary sewer pipe and appurtenances shall be tested for leakage in accordance with APWA Division III requirements. Leakage tests will include required APWA air pressure test for sewer lines and required APWA vacuum test of manholes. All PVC pipe shall be tested for deflection. Deflection shall be tested with a mandrel equal to 95% of the pipe size being tested. In addition, sewer lines shall be video inspected by the contractor per APWA, Division III, Section 303.3.11. All tests shall be witnessed by the Engineer and the City of West Linn.
8. A plumbing permit from the City of West Linn Building Department is required for sanitary sewer laterals beyond the first cleanout.
9. All materials, installation, tests, and inspections to be made in strict accordance with City of West Linn's Street/Utility Construction Standards, with APWA's Standard Specifications for Public Works Construction, and with the Uniform Plumbing Code.

West Linn 8-10-98

GRAPHIC SCALE

100 0 50 100 200 400

(IN FEET)
1 inch = 100 ft.

AS BUILTS

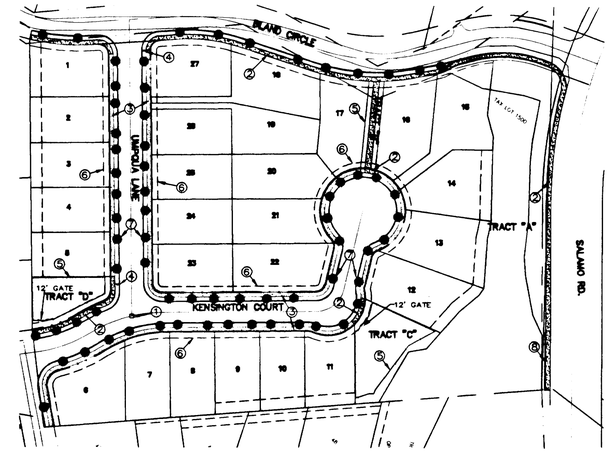

① ELEVATION BENCH MARK MONUMENT TO BE SET AT INTERSECTION OF UMPQUA LANE & KENSINGTON CT.

② SIDEWALK ALONG TRACT FRONTAGE, BLAND CIRCLE & SALAMO RD. TO BE CONSTRUCTED WITH SUBDIVISION IMPROVEMENTS.

③ REMAINING SIDEWALKS TO BE CONSTRUCTED DURING HOME BUILDING PHASE.

④ TRAFFIC CONTROL AND STREET NAME SIGNS TO BE INSTALLED BY THE CITY WITH SIGN & INSTALLATION COSTS PAID BY THE DEVELOPER.

⑤ A FOUR-FOOT HIGH MATTE BLACK CHAINLINK FENCE SHALL BE INSTALLED AROUND THE DETENTION PONDS IN TRACT 'D' AND TRACT 'C'. SIGNS SHALL BE ATTACHED TO THE FENCES SURROUNDING THE PONDS THAT WILL IDENTIFY THESE AREAS AS PROTECTED. 12' GATES SHALL BE PROVIDED FOR ACCESS TO TRACTS 'C' & 'D' WHERE IDENTIFIED ABOVE. A 4' HIGH MATTE BLACK CHAINLINK FENCE SHALL ALSO BE INSTALLED ON BOTH SIDES OF TRACT 'B'.

⑥ UNDERGROUND UTILITIES TO BE LOCATED IN PUBLIC UTILITY EASEMENT. UTILITIES SHALL INCLUDE P.G.E., TCI CABLE TELEVISION, U.S. WEST TELEPHONE & NORTHWEST NATURAL GAS.

⑦ APPROXIMATE LOCATION OF STREET TREES SHOWN. FINAL STREET TREE LOCATIONS TO BE DETERMINED BY THE CITY OF WEST LINN PARKS DEPARTMENT.

⑧ CONSTRUCT HANDRAIL ALONG BACK EDGE OF SIDEWALK FROM STA 21+99.19 TO STA 22+75.

Extended Dry Detention Water Quality:

1. Storm drain water quality and detention pond shall be seeded with the following seed mixture:
   - 40% Agrpstos alba (Redtop)
   - 25% Alopecures pratensis (Meadow Foxtail)
   - 20% Lolium perenne (perennial Ryegrass)
   - 15% Phleum pratense (Timothy)
2. Application rates should be per the supplier's recommendations, or at the following weight per 1000 square foot basis:
   - Hydroseeding:
     - 5 lbs seed mix
     - 7 lbs 10-20-20 (N-P-K) fertilizer
     - 50 lbs wood cellulose fiber mulch
   - Broadcast Seeding:
     - 5 lbs seed mix
     - 7 lbs 10-20-20 (N-P-K) fertilizer
     - 70 lbs wood cellulose fiber mulch
3. Pond bottom should be mowed and cleaned of debris in the spring of each year, as soon as practical after the start of the growing season (March 1st), but no later than May 1st.
4. Sediment in the pond should be removed if accumulations exceeding 2" are in evidence, or every two years.
5. Sediment accumulations in the inlet/outlet structures shall be removed biannually by the City of West Linn Public Works personnel.
6. A four-foot high matte black chain link fence shall be installed around the water quality and detention facility in accordance with the Conditions of Approval.

West Linn 04-05-98

Structural Fill Notes:

1. Besides the structural fill that will be required for construction of street improvements a structural fill is also to be built on lots where noted on the plans to the specifications noted below.
2. All miscellaneous materials and the organic layer under the fill area shall be stripped or removed. All stumps in the fill area must be removed in their entirety.
3. The contractor shall retain the services of a Geotechnical Engineer and testing lab to inspect and provide testing services and to certify that the structural fill meets the compaction requirements appropriate for home construction and the requirements of the City of West Linn Grading Permit for this project. The contractor must obtain the grading permit prior to beginning work on the project.
4. Fill material should be placed in horizontal lifts approximately 8 inches thick (loose) and compacted to at least 95% of the maximum dry density, as determined by ASTM D 698, except as modified by the Geotechnical Engineer. Moisture content of the structural fill shall be controlled to within 2% of the optimum moisture content at the time of compaction, unless modified by the Geotechnical Engineer.
5. Inspections by City of West Linn personnel will be required after stripping of topsoil and prior to fill placement, after each lift completed under a roadway and after all fill is completed. To request an inspection, call City of West Linn at least 24 hours in advance.
6. At the completion of fill activities a final report to the City of West Linn by the Geotechnical Engineer is required.

West Linn 04-05-98

Utilities:

1. If not noted on the plans utility information and crossing locations will have to be obtained from the utilities.
2. Utility contacts are as follows: PGE - Cindy Manselle, 650-1411; TCI Cable - Linda Petersen, 605-4987, U.S. West Communications - Lori Dorney 242-4596, Northwest Natural Gas - Scott Palmer 721-2447.

West Linn 8-10-98

Storm Drains:

1. Ten inch and larger storm drain pipe shall be Class 3, non-reinforced, concrete pipe conforming to ASTM C14, PVC pipe conforming to ASTM D-3034 or *seamless* PVC pipe conforming to ASTM F794. (PW Rib). Where required, reinforced concrete pipe shall conform to ASTM C-76, Class IV. Rubber joints are required for all concrete pipe. Eight inch and smaller storm drain pipe shall conform to ASTM D-3034 PVC pipe.
2. Gutter inlets shall be poured in-place concrete with a minimum compressive strength of 3000 psi. Frame shall be fabricated of structural steel, ASTM A-7, A-36, A-273.
3. Manhole base may be poured in-place concrete or precast. Manhole risers and tops shall be precast sections with a minimum compressive strength of 4000 psi. Tops shall be eccentric cones except where insufficient headroom requires flat tops. Some or all of the storm drain manholes required will be oversized manholes. Interior dimensions noted on the plans are minimums. Check with manhole manufacturer for actual size needed for type of pipe to be used. Pipe shall be connected to manhole by means of a rubber boot or sand collar, and shall have a shear joint located 18" outside of the manhole.
4. All manholes located in easement areas require tamper proof lids. All manhole rims not in pavement area to be set 12 inches above proposed grade.
5. Cleanout pipe, fittings, and joints shall be the same specifications as for pipe. Castings are shown on detail and shall conform to ASTM A48 (Grade 30). Cleanout riser shall match downstream pipe diameter.
6. Granular backfill (3/4"-0) is to be compacted to 95% maximum dry density per AASHTO T-99 test method and native material shall be compacted to 85% of in-place dry density of surrounding soil.
7. Storm drain service laterals shall be 4" pipe conforming to the same specifications as the storm drain main lines. Service laterals shall be installed to a point beyond the line or utility easement as shown on the plan. The service lateral shall be plugged with a 4" rubber ring plug, and the location of the laterals end marked with a 2"x4" stake painted white.
8. Riprap where noted on the plans is to be Class 50 in accordance with Oregon State Highway Division specification 714.
9. Storm drains shall be tested for deflection with a mandrel equal to 95% of the pipe size being tested. In addition, storm lines shall be video inspected by the contractor per APWA, Division III, Section 303.3.11. All tests shall be witnessed by the Engineer.
10. A plumbing permit from the City of West Linn Building Department is required for storm drains beyond the first cleanout.
11. All materials, installation, tests, and inspections to be in strict accordance with APWA's Standard Specifications for Public Works Construction and the supplemental standards and specifications of the City of West Linn Street/Utility Design and Construction Standards.

West Linn 11-17-98

Streets:

1. New street sections are to be cleared of all surface vegetation and other miscellaneous structures or materials. Grub improvement areas to remove all buried vegetative matter and debris to a depth of 8" below subgrade. Properly dispose of all waste material.
2. Street subgrade shall conform to APWA Division II, Section 206. Areas to receive fill are to be inspected by City of West Linn personnel prior to placement of the fill. The Contractor shall have fill areas tested for compaction by a certified testing lab in accordance with APWA Division II, Section 206.3.05. Such testing will be at the contractor's expense.
3. Aggregate base rock shall conform to the requirements of APWA Division II, Section 207. Base course shall be 1½"-0 crushed rock and leveling course shall be ¾"-0. City of West Linn requires a proof roll with a loaded 10 yard dump truck of the subgrade prior placement of the rock and again after placement of the base rock and prior to paving. All underground utilities including laterals, services and power or gas conduits will be in place before subgrade proof roll will take place.
4. Asphalt concrete shall conform to the requirements of APWA Division II, Section 211. 1½" base lift shall be Class 'B' A.C. and 1½" final lift shall be Class 'C' A.C. as per APWA Division II, Section 211.2.01. The top lift of asphalt concrete shall not be placed prior to receiving permission from the City of West Linn Engineering Department.
5. Construct curb and gutter using Class 'A' 3300 psi concrete with maximum 1½" aggregate size. Contraction joints at 15' maximum on centers. Three inch weepholes are to be installed on all lots uphill or even with the street. Generally weepholes shall be located at the center and lowest edge of curb for each lot. Curb depressions for handicap ramps shall be centered between curb returns at intersections unless otherwise noted on the plans. Contractor shall stamp location of sewer and water crossings with an (S) or a (W).
6. All materials, installation, tests, and inspections to be in strict accordance with APWA's Standard Specifications for Public Works Construction and the supplemental standards and specifications of the City of West Linn Street/Utility Design and Construction Standards.
7. A street construction encroachment permit or similar permit may be required from the City of West Linn. Construction permit fees or other similar fees or bonding required of the contractor will be the contractor's responsibility to obtain.

West Linn 12-22-97

General Notes:

1. The Design Engineer will be responsible for inspection of the proposed improvements with oversight from the City's Public Works and Engineering staff.
2. A work schedule will be required from the contractor so that the Engineer can have an inspector onsite at the appropriate times. If the work schedule is revised the contractor is to notify the Engineer of the changes. Additionally, the contractor is to give the Engineer at least 24 hours notice of any testing requiring the presence of the Engineer and/or City staff.
3. The contractor is to receive the approval of the Engineer of any proposed changes to the plans or standard requirements.
4. A Building Department Plumbing Permit is required for utilities beyond the first cleanout or meter on private property.
5. A Public Improvement Guarantee Agreement, a pre-construction meeting with the City of West Linn, and installation of erosion control measures are required prior to beginning construction.
6. Prior to site clearing, construction "snow" fencing shall be placed around trees to be preserved 10 feet beyond the dripline of the trees and shall remain in place throughout the infrastructure improvements.

West Linn 2-9-98

General Grading and Erosion Control

1. Clean waste material excavated from road cut or trenching areas not used in street fill areas may be spread evenly across lot areas in depths of less than one foot, except where noted otherwise on the plans.
2. During construction, straw bales, cutoff trenches or some other method of runoff control shall be used to prevent erosion and/or siltation from crossing outside the work area boundaries.
3. Large organic material, miscellaneous pipe or construction material must be removed from the site and disposed of properly.
4. No filling or cutting shall be done outside of approved grading areas.
5. All erosion control facilities shall meet the requirements of the Clackamas County Department of Utilities, Erosion Prevention and Sediment Control Plans Technical Guidance Handbook, revised August, 1994 and the Oregon Administrative Rules.

West Linn 12-22-97

REGISTERED PROFESSIONAL ENGINEER
Patrick A. Sisul
OREGON
MAY 18, 1993
PATRICK A. SISUL

5/16/00

REVISIONS	BY
REVISED PER CITY COMMENTS: (8/31/99)	MM

UMPQUA HEIGHTS
RENAISSANCE DEVELOPMENT

Specifications

SISUL ENGINEERING
375 PORTLAND AVENUE
GLADSTONE, OREGON 97027
(503) 657-0188

DRAWING: 99-22SPC.DWG

DATE	JUNE 1999
SCALE	1"=100'
DRAWN	MM
JOB	99-22
SHEET	1
OF	12 SHEETS

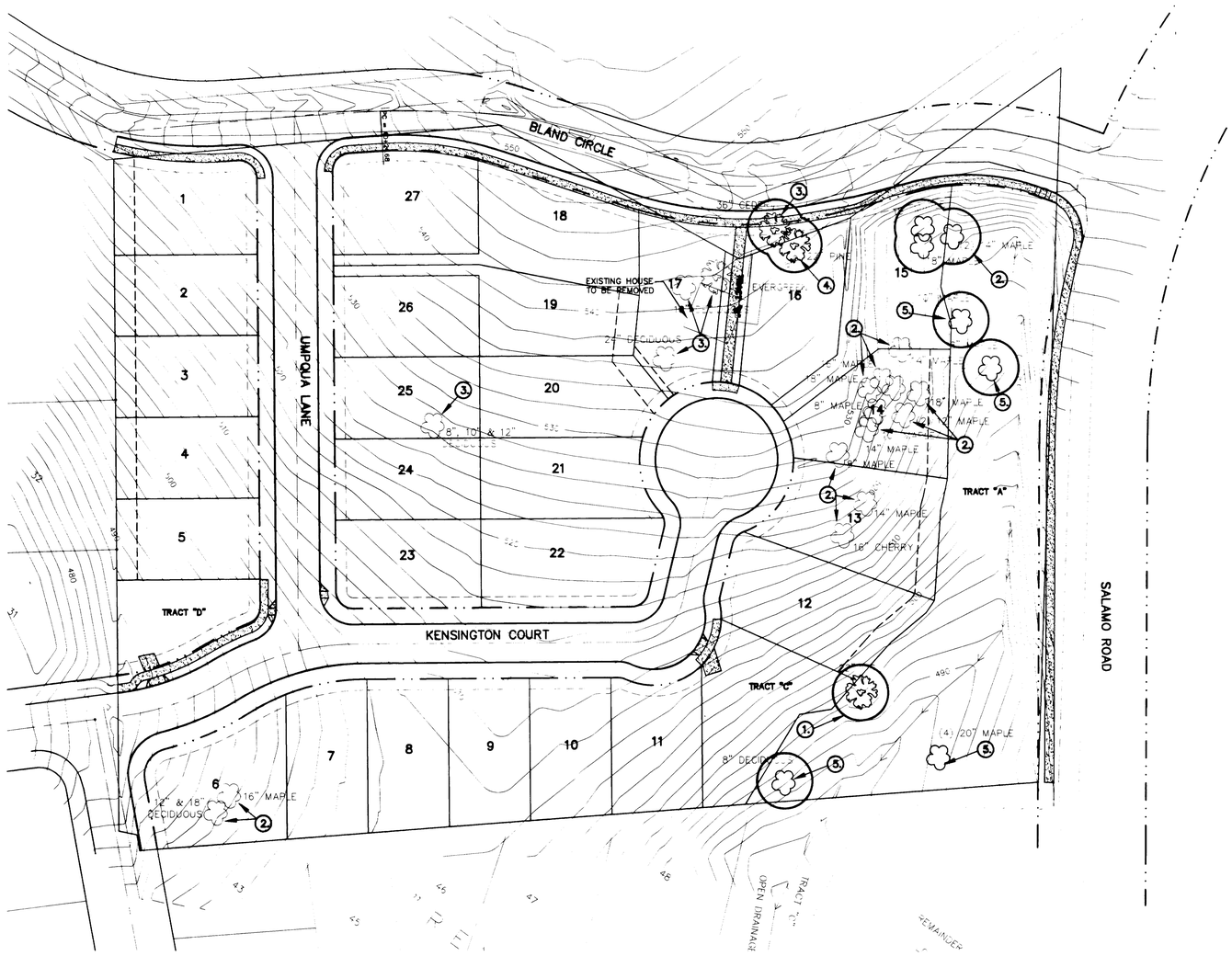

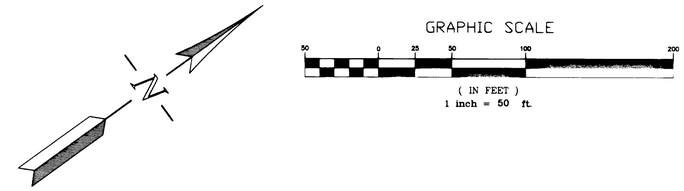

AS BUILTS

TREE NOTE LEGEND:

1. THE CONTRACTOR SHALL CLEARLY DELINEATE THE DRIPLINE PLUS 10 FOOT RADIUS WITH ORANGE SNOW FENCING AROUND THE 22-INCH DOUGLAS FIR IN ORDER TO PRESERVE THE ROOT SYSTEM DURING CONSTRUCTION.
2. ALL DECIDUOUS TREES ON LOTS 6, 13, 14, 15 & 16 SHALL BE DELINEATED WITH ORANGE SNOW FENCING AND PRESERVED. OTHERWISE THE DEVELOPER WILL HAVE TO MITIGATE FOR THESE TREES REMOVED ON AN INCH BY INCH REPLACEMENT ALONG TRACT 'A'.
3. TREE TO BE PRESERVED IF POSSIBLE, CONTRACTOR TO WORK WITH CITY ARBORIST IN ATTEMPT TO PRESERVE.
4. TREE IS DEAD.
5. TREE IS IN TRACT 'A' AND SHALL BE PRESERVED.
6. SNOW FENCE INSTALLATION MUST BE APPROVED BY THE ARBORIST BEFORE PROCEEDING WITH GRADING. NO FILL SHALL BE PLACED WITHIN THE FENCED AREA.

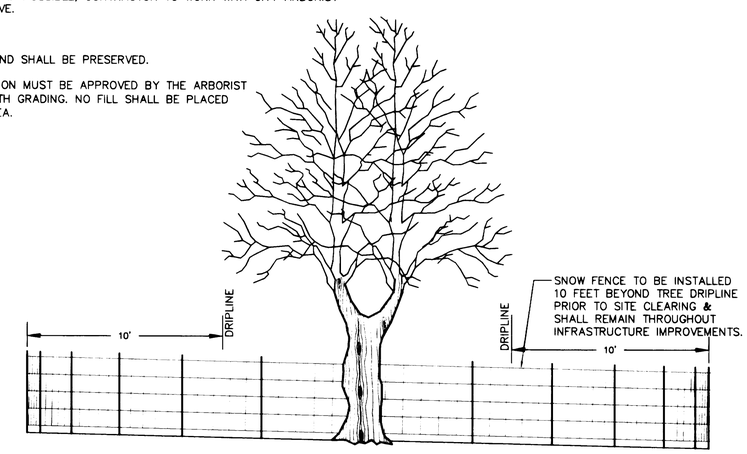

SNOW FENCE DETAIL
N.T.S.

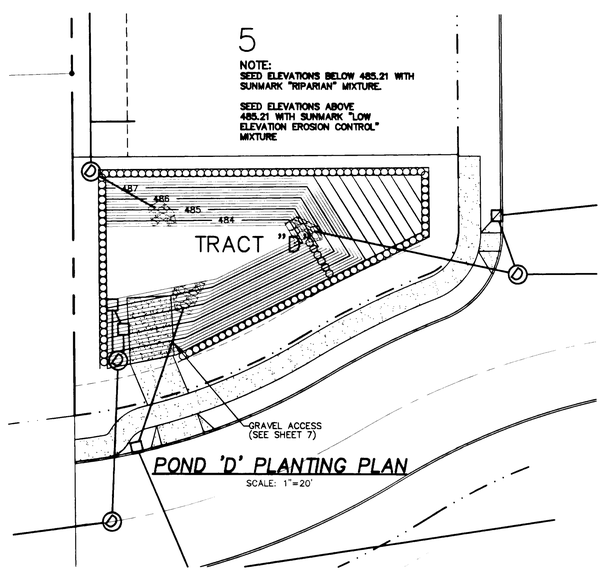

POND 'D' PLANTING PLAN
SCALE: 1"=20'

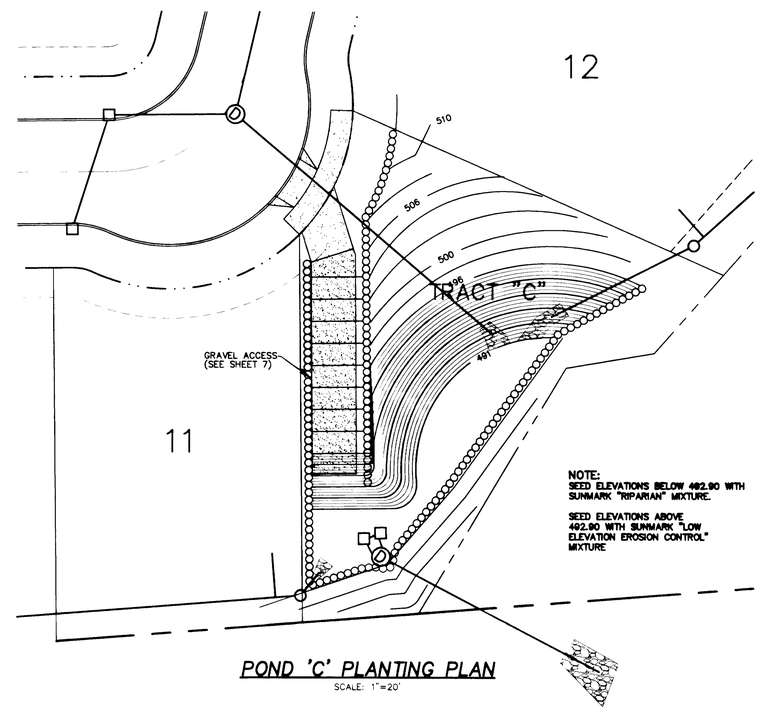

POND 'C' PLANTING PLAN
SCALE: 1"=20'

REGISTERED PROFESSIONAL ENGINEER 16,551 OREGON MAY 18, 1993 PATRICK A. SISUL
5/16/00

REVISIONS	BY
REVISED PER CITY COMMENTS (8/31/99)	MM
AS-BUILT 03/17/00	LD

UMPQUA HEIGHTS
RENAISSANCE DEVELOPMENT

Tree Impact Plan & Protection Detail

SISUL ENGINEERING
375 PORTLAND AVENUE
GLADSTONE, OREGON 97027
(503) 657-0188
DRAWING: 99-22TRE.DWG

DATE	JUNE 1999
SCALE	1"=50'
DRAWN	MM
JOB	99-22
SHEET	2
OF	12 SHEETS

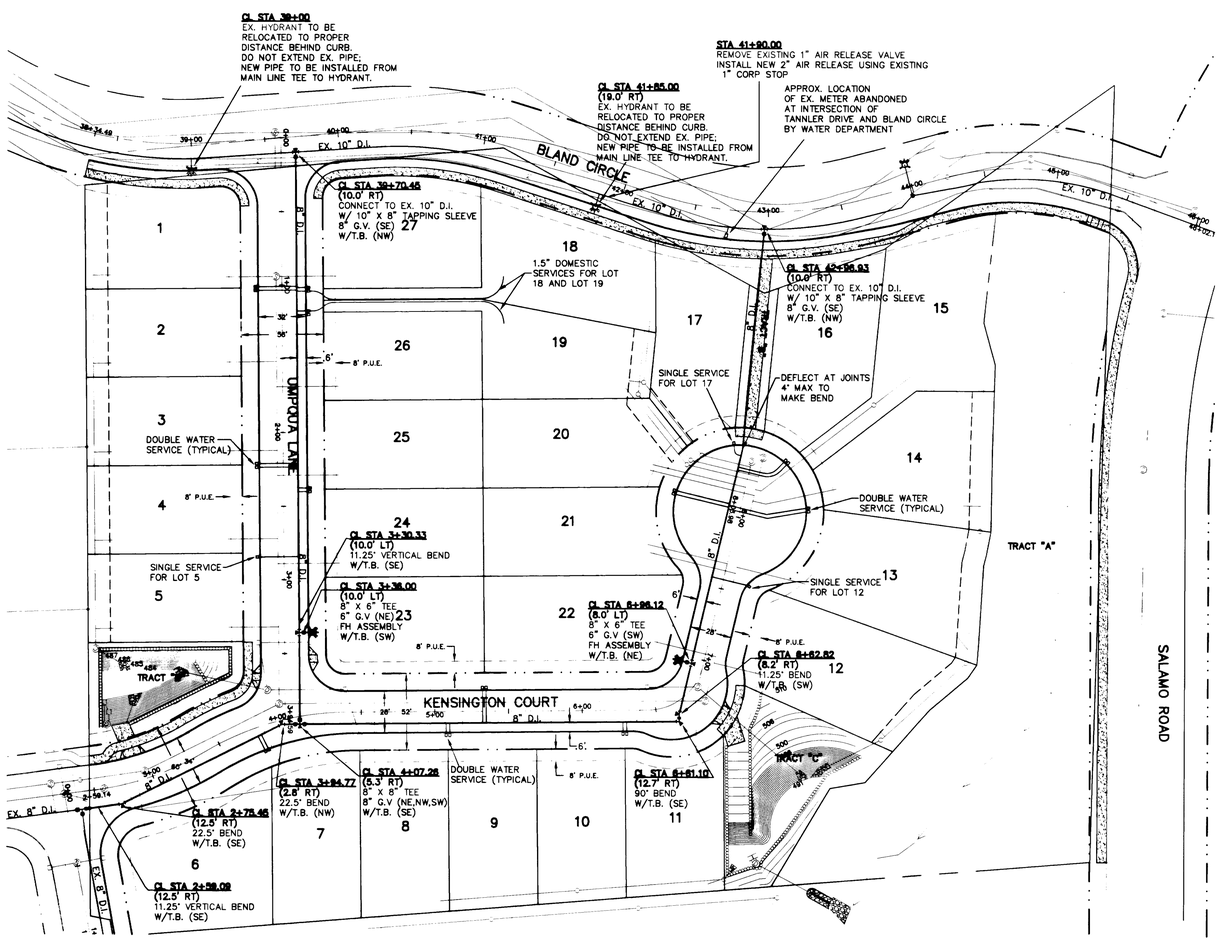

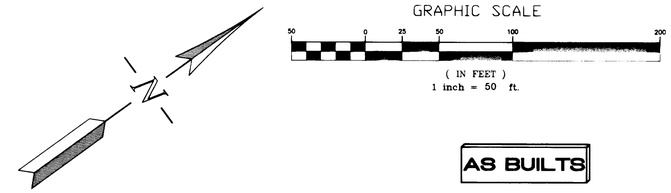

AS BUILTS

REVISIONS	BY
REVISED PER CITY COMMENTS (8/26/99)	MM
AS-BUILT 03/17/00	LD

UMPQUA HEIGHTS
RENAISSANCE DEVELOPMENT

Waterline Plan

SISUL ENGINEERING
375 PORTLAND AVENUE
GLADSTONE, OREGON 97027
(503) 657-0188
DRAWING: 99-22WA1.DWG

REGISTERED PROFESSIONAL ENGINEER 16,551 OREGON MAY 18, 1993 PATRICK A. SISUL
5/16/00

DATE	JUNE 1999
SCALE	1"=50'
DRAWN	MM
JOB	99-22
SHEET	3
OF 12	SHEETS

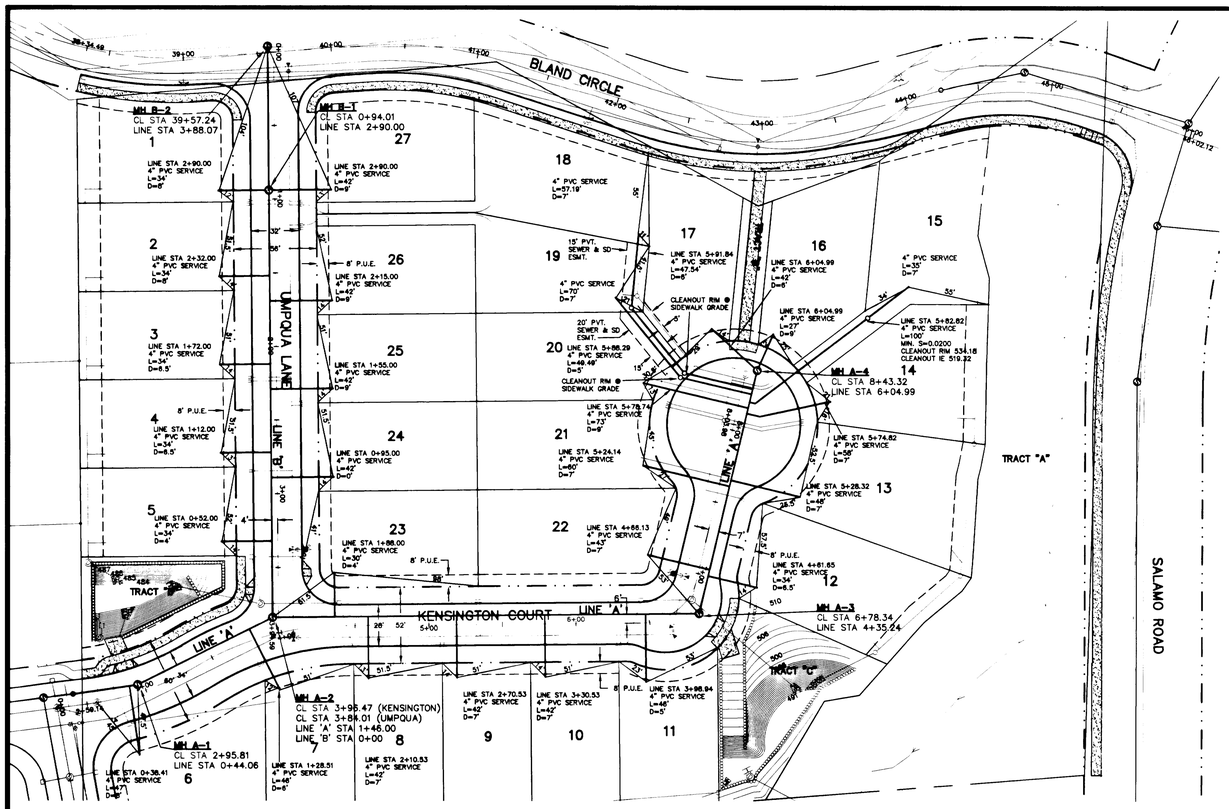

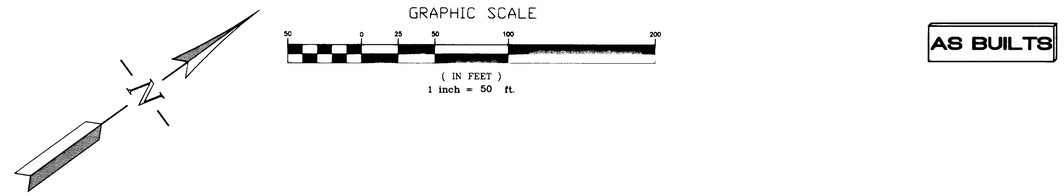

AS BUILTS

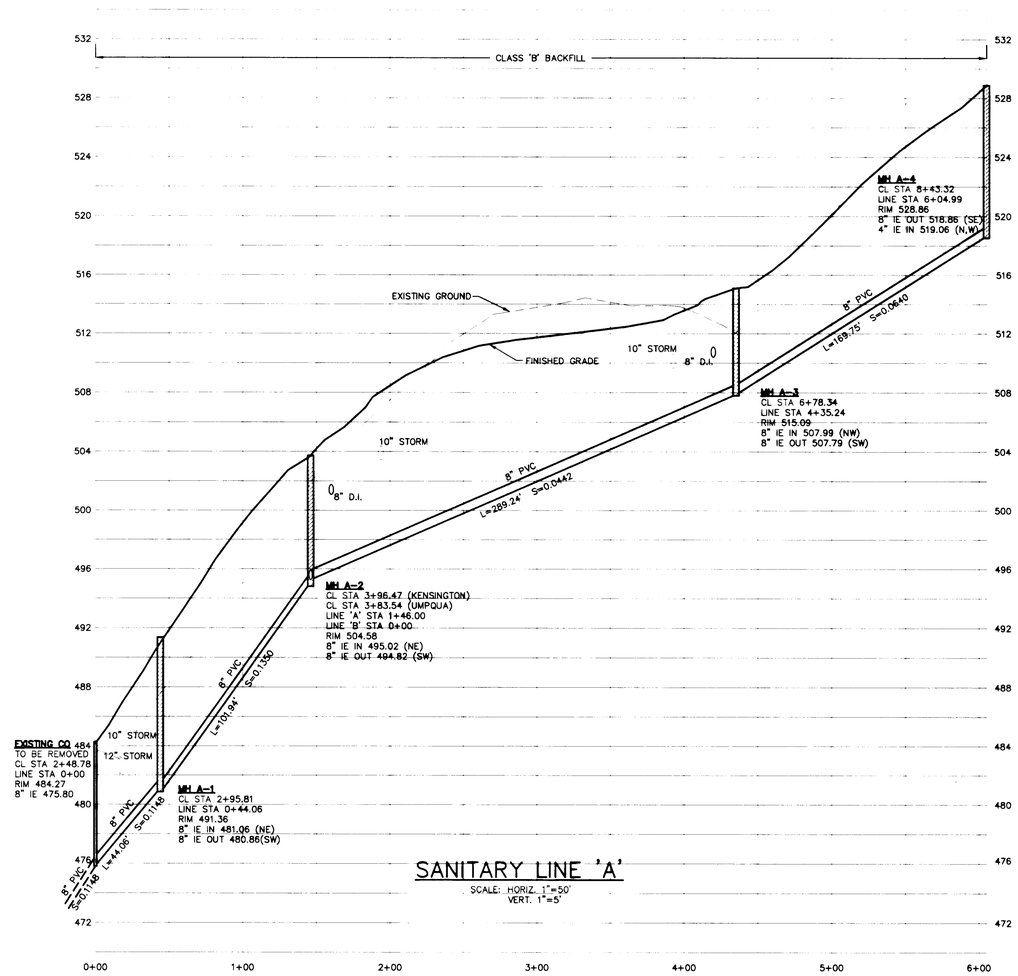

SANITARY LINE 'A'
SCALE: HORIZ. 1"=50'
VERT. 1"=5'

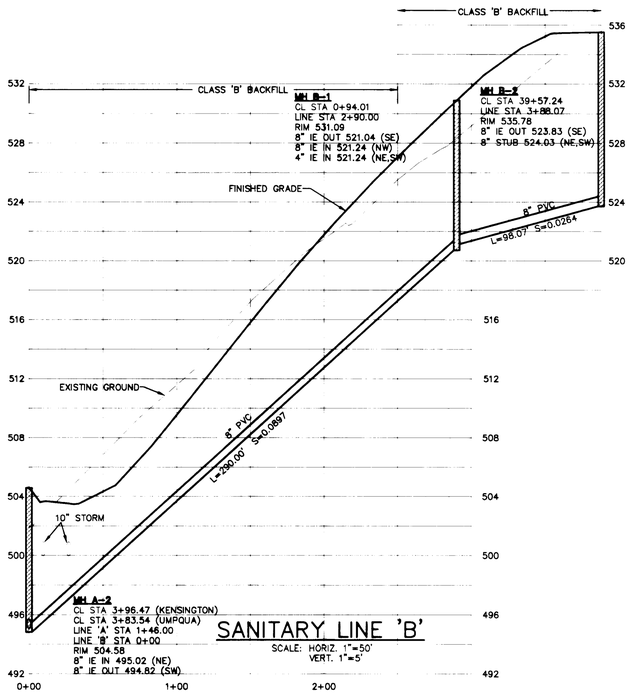

SANITARY LINE 'B'
SCALE: HORIZ. 1"=50'
VERT. 1"=5'

REGISTERED PROFESSIONAL ENGINEER
OREGON
MAY 18, 1993
PATRICK A. SISUL
5/16/00

REVISIONS	BY
REVISED PER CITY COMMENTS (8/30/99) & EXTENDED LINE "B"	MM
REVISED SERVICE GRADES (10/20/99) LOTS 16,17,18,19,20	MM
AS-BUILT 03/17/00	LD

UMPQUA HEIGHTS
RENAISSANCE DEVELOPMENT

Sanitary Sewer Plan and Profiles

SISUL ENGINEERING
375 PORTLAND AVENUE
GLADSTONE, OREGON 97027
(503) 657-0188

DRAWING: 99-22SAN.DWG

DATE	JUNE 1999
SCALE	1"=50'
DRAWN	MM
JOB	99-22
SHEET	4
OF	12 SHEETS

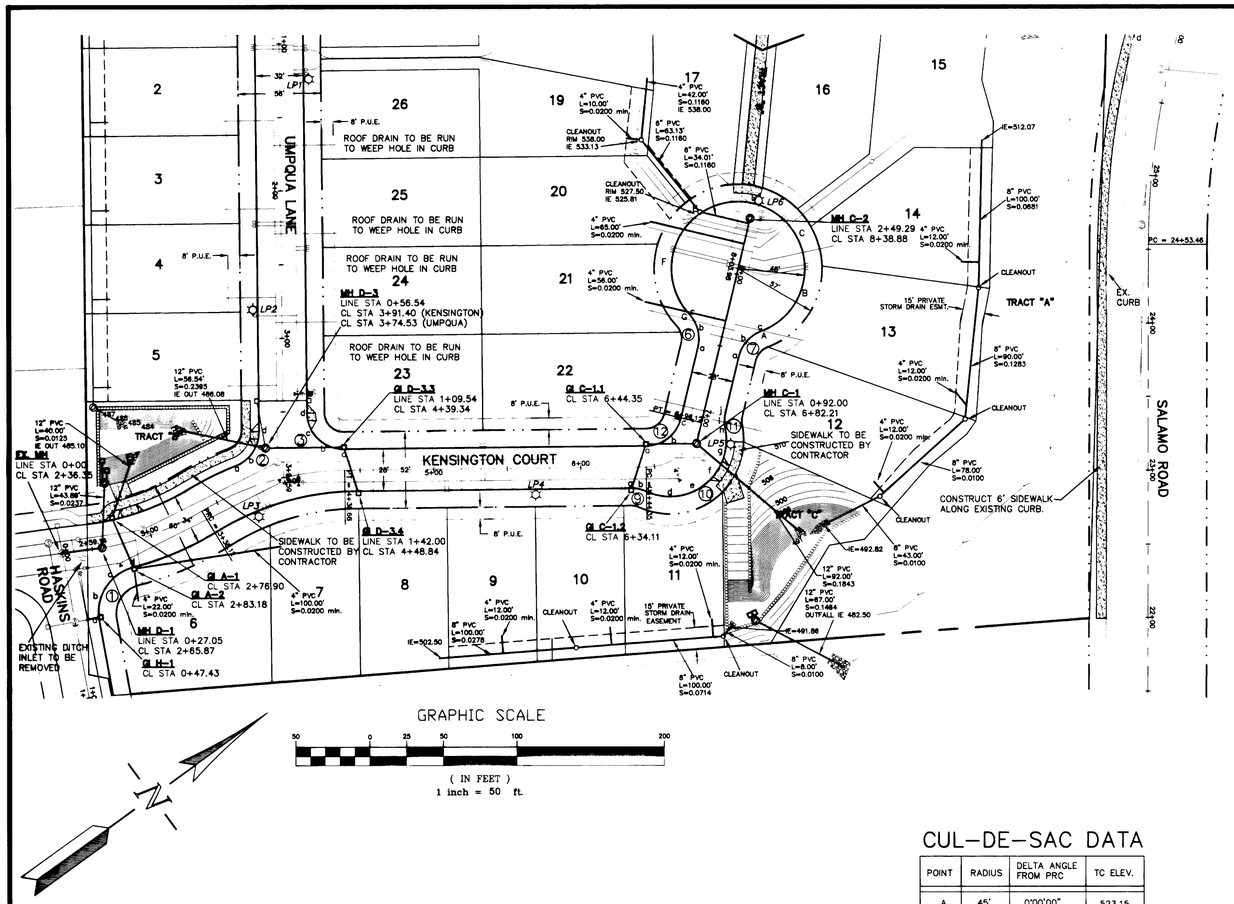

GRAPHIC SCALE

50 0 25 50 100 200

(IN FEET)
1 inch = 50 ft.

CUL-DE-SAC DATA

POINT	RADIUS	DELTA ANGLE FROM PRC	TC ELEV.
A	45'	0°00'00"	523.15
B	45'	48°42'50"	525.70
C	45'	97°25'40"	528.09
D	45'	146°08'30"	529.21
E	45'	194°51'20"	528.09
F	45'	243°34'09"	525.70
G	45'	292°16'59"	523.15

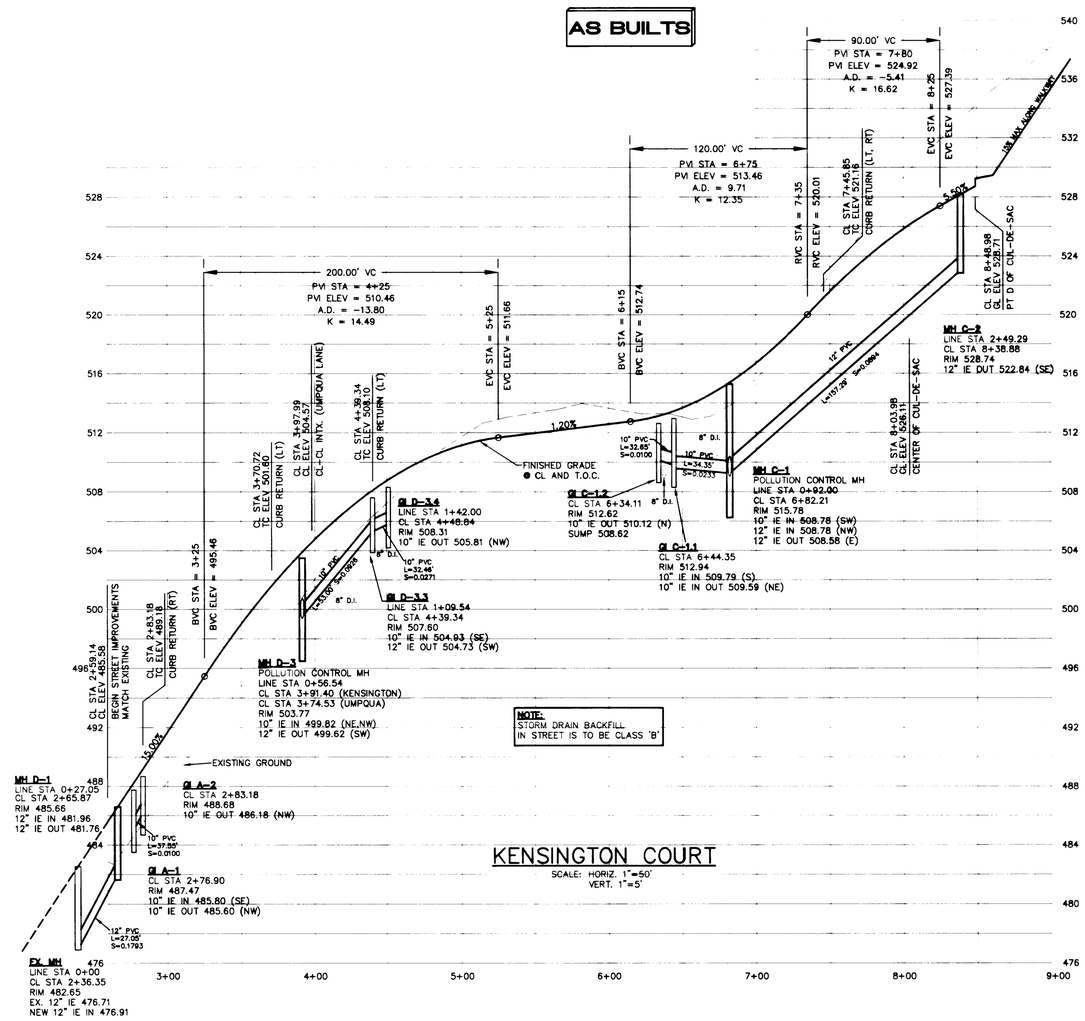

CURB RETURN DATA (ELEVATIONS ARE TOP OF CURB)

CURB	DATA	a	b	c	d
①	Δ = 85°42'04" R = 32.00' L = 47.86'	483.40 HASKINS RD. CL STA. 0+49.58	483.97	486.40	489.18 KENSINGTON CT. CL STA 2+83.18
②	Δ = 69°12'33" R = 25.00' L = 30.20'	501.60 KENSINGTON CT. CL STA 3+70.72	502.68	503.30	503.05 UMPQUA LANE CL STA 3+63.15
③	Δ = 90°00'57" R = 25.00' L = 39.27'	508.12 KENSINGTON CT. CL STA 4+39.34	506.12	504.00	503.05 UMPQUA LANE CL STA 3+51.04
④	Δ = 93°14'33" R = 25.00' L = 40.68'	534.81 UMPQUA LANE 0+45.86	535.34	533.83	532.11 BLAND CIRCLE CL STA 39+17.50
⑤	Δ = 86°45'27" R = 25.00' L = 37.86'	535.05 UMPQUA LANE 0+41.22	536.11	538.04	539.67 BLAND CIRCLE CL STA 39+99.63
⑥	Δ = 56°08'30" R = 25.00' L = 24.50'	521.16 KENSINGTON CT. CL STA 7+45.85	522.32	523.15 CUL-DE-SAC POINT A	
⑦	Δ = 56°08'30" R = 25.00' L = 24.50'	521.16 KENSINGTON CT. CL STA 7+45.85	522.32	523.15 CUL-DE-SAC POINT G	
⑧	Δ = 84°51'39" R = 35.00' L = 51.84'	534.66 BLAND CIRCLE CL STA 45+40.19	533.76	531.36	529.65 SALAMO RD. CL STA 25+88.42

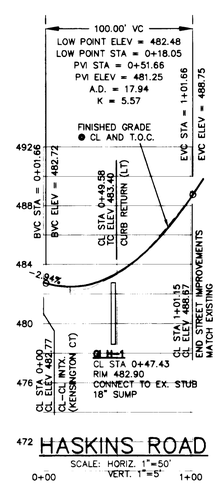

UMPQUA HEIGHTS,
WEST LINN, OREGON
STREET LIGHTING LEGEND

PROPOSED STREET LIGHT: 35-foot, gray, round, tapered, direct bury, fiberglass light pole, with a 200Watt, 240Volt, HPS, "Cobra-Head" style luminaire, mounted on a 6-foot mastarm, 30 feet above the roadway.

QTY REQUIRED: Four (4) lights.

PROPOSED STREET LIGHT: 30-foot, bronze, round, tapered, direct bury, fiberglass light pole, with a 100Watt, 240Volt, HPS, "Shoe box" style luminaire, mounted on a 8-inch mastarm, 25-feet above the roadway.

QTY REQUIRED: Six (6) lights

Street light design by:
R.J. Rouse Electric, Inc.
(503) 612-0840 Fax: (503) 612-0891
All Per IES, PGE, & Municipal specifications June 28,1999

REGISTERED PROFESSIONAL ENGINEER
#15,551
OREGON
MAY 18, 1993
PATRICK A. SISUL
6/14/00

REVISIONS	BY
REVISED PER CITY COMMENTS (8/31/99)	MM
REVISED ROOF DRAINS LOT 18,19 (9/14/99)	MM
AS-BUILT 03/17/00	LD

UMPQUA HEIGHTS
RENAISSANCE DEVELOPMENT

Street and Storm Drain Plan
Kensington Court, Haskins Road

SISUL ENGINEERING
375 PORTLAND AVENUE
GLADSTONE, OREGON 97027
(503) 657-0188

DRAWING NO. 22-12.DWG

DATE JUNE 1999
SCALE 1"=50'
DRAWN MM
JOB 99-22
SHEET 5 OF 12 SHEETS

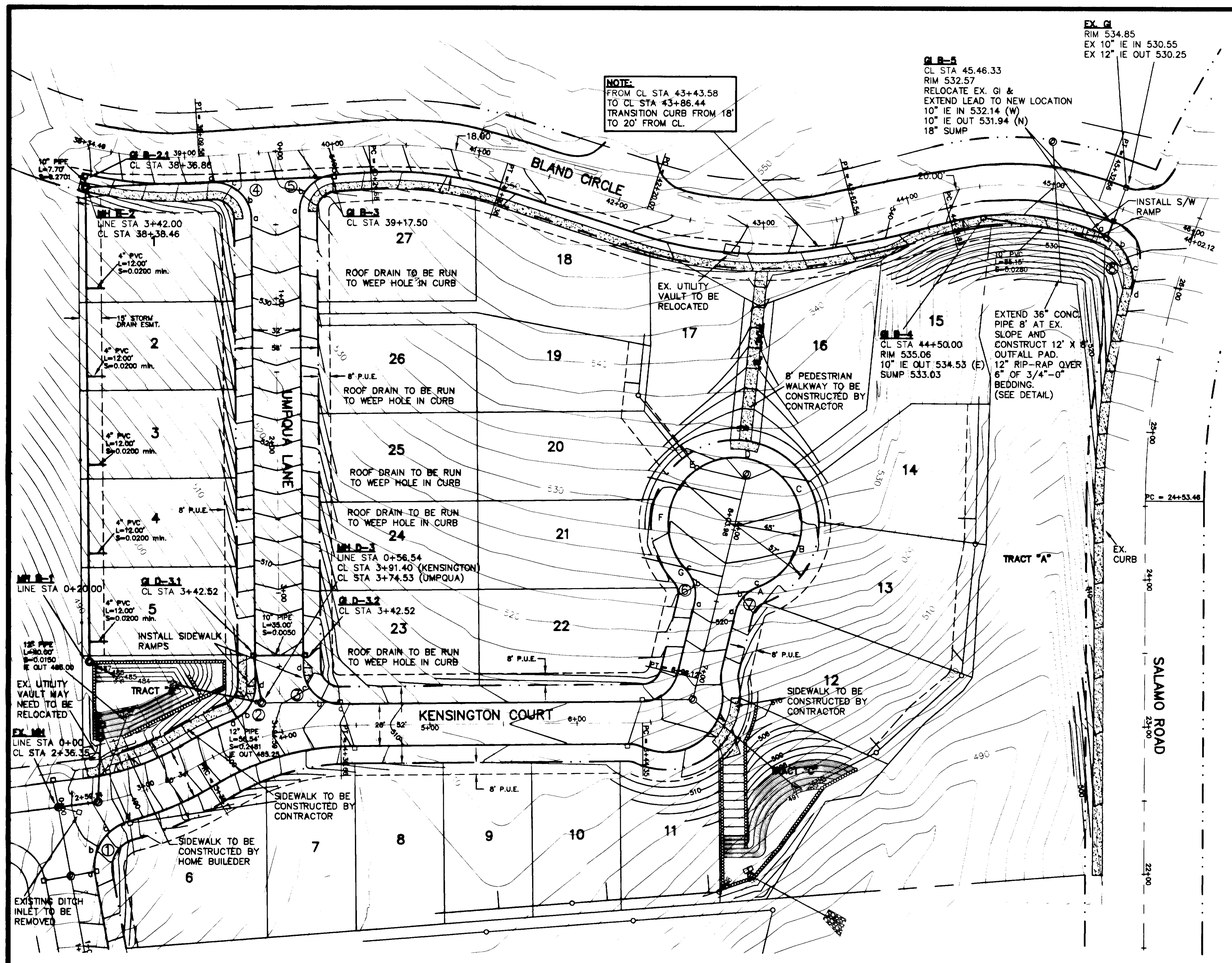

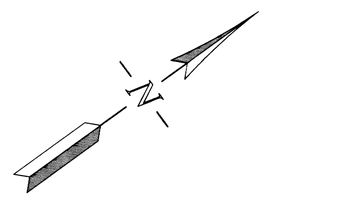

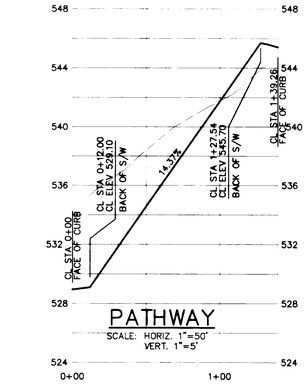

PATHWAY

SCALE: HORIZ. 1"=50'
VERT. 1"=5'

UMPQUA HEIGHTS,
WEST LINN, OREGON
STREET LIGHTING LEGEND

PROPOSED STREET LIGHT:35-foot, gray, round, tapered, direct bury, fiberglass light pole, with a 200Watt, 240Volt, HPS, "Cobra-Head" style luminaire, mounted on a 6-foot mastarm, 30 feet above the roadway.

QTY REQUIRED: Four (4) lights.

PROPOSED STREET LIGHT:30-foot, bronze, round, tapered, direct bury, fiberglass light pole, with a 100Watt, 240Volt, HPS, "Shoe box" style luminaire, mounted on a 8-inch mastarm, 25-feet above the roadway.

QTY REQUIRED: Six (6) lights

Street light design by:
R.J. Rouse Electric, Inc.
(503) 612-0840 Fax: (503) 612-0891
All Per IES, PGE, & Municipal specifications

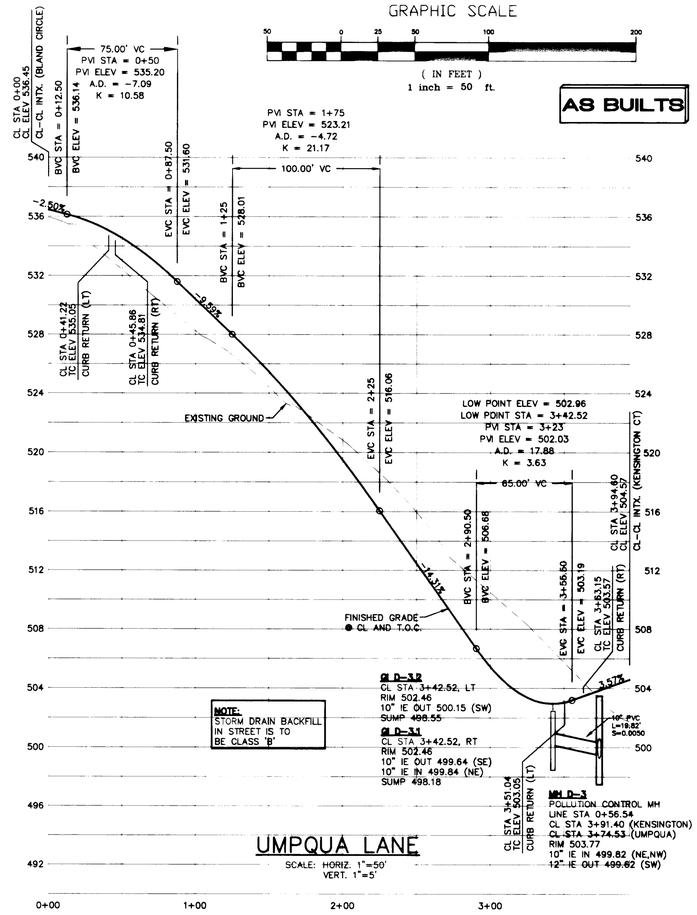

UMPQUA LANE

SCALE: HORIZ. 1"=50'
VERT. 1"=5'

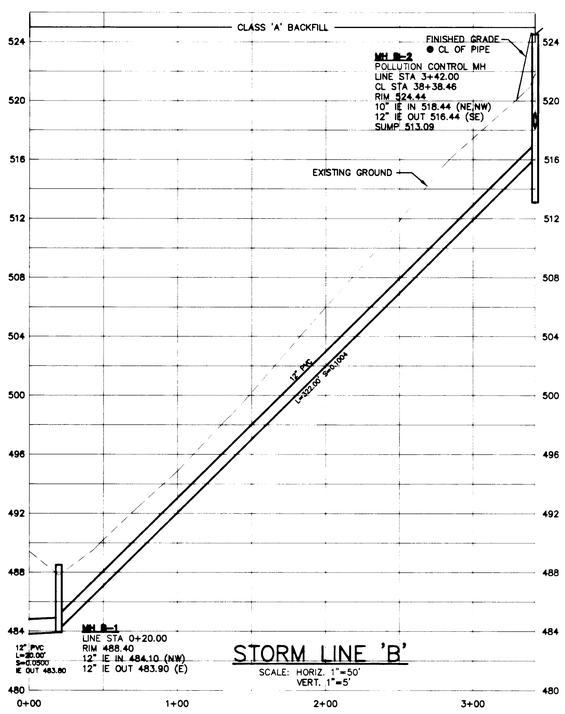

STORM LINE 'B'

SCALE: HORIZ. 1"=50'
VERT. 1"=5'

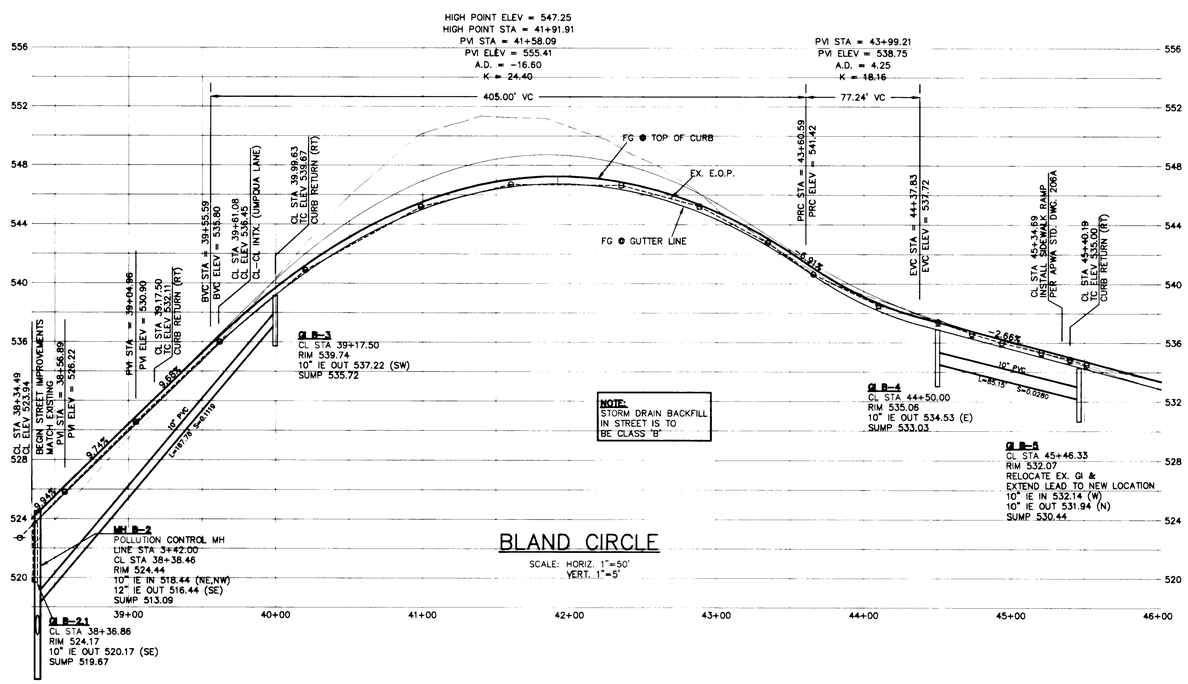

BLAND CIRCLE

SCALE: HORIZ. 1"=50'
VERT. 1"=5'

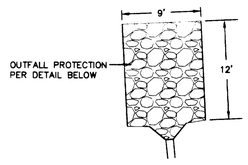

OUTFALL DETAIL

NTS

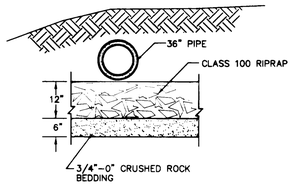

OUTFALL PROTECTION DETAIL

NTS

REGISTERED PROFESSIONAL ENGINEER
#15,551
OREGON
MAY 18, 1993
PATRICK A. SISUL
6/16/00

REVISIONS	BY
REVISED PER CITY COMMENTS (8/31/99)	MM
AS-BUILT 03/17/00	LD

UMPQUA HEIGHTS
RENAISSANCE DEVELOPMENT

Street and Storm Drain Plan
Umpqua Lane, Bland Circle and Storm Line 'B'

SISUL ENGINEERING
375 PORTLAND AVENUE
GLADSTONE, OREGON 97027
(503) 657-0188

DRAWING: 99-22STS.DWG

DATE	JUNE 1999
SCALE	1"=50'
DRAWN	MM
JOB	99-22
SHEET	6
OF	12 SHEETS

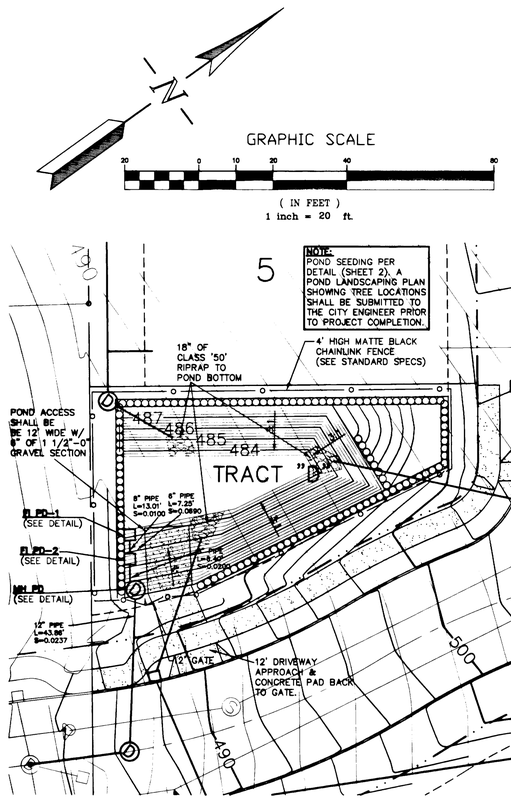

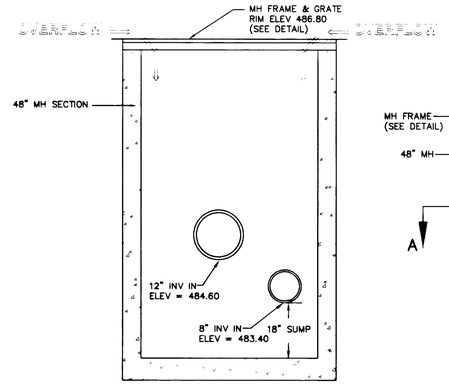

SECTION A-A

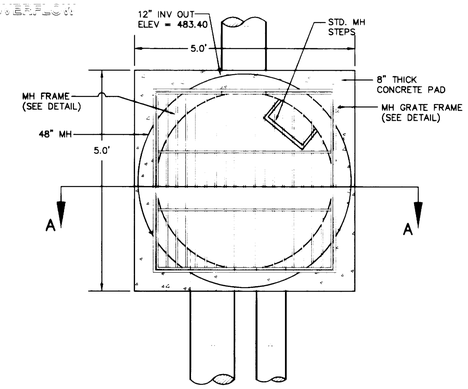

PLAN

MANHOLE PD DETAIL
NTS

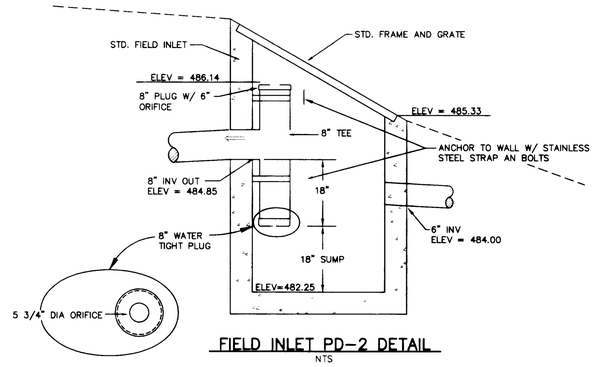

FIELD INLET PD-2 DETAIL
NTS

AS BUILTS

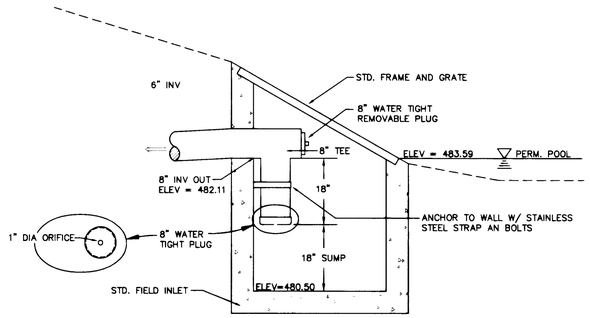

FIELD INLET PD-1 DETAIL
NTS

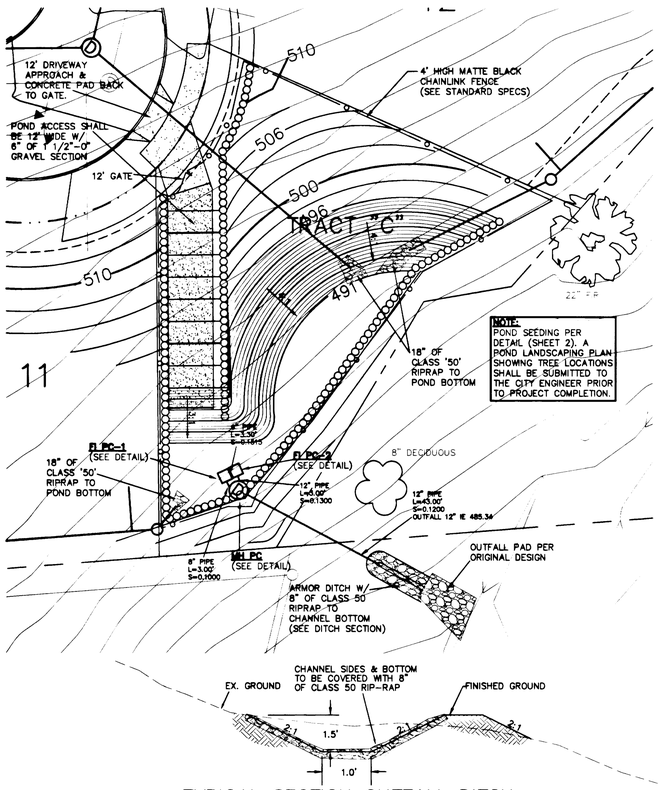

TYPICAL SECTION OUTFALL DITCH
N.T.S.

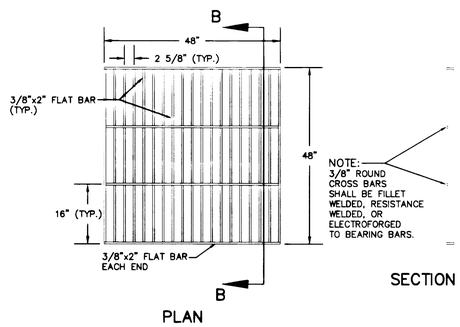

PLAN

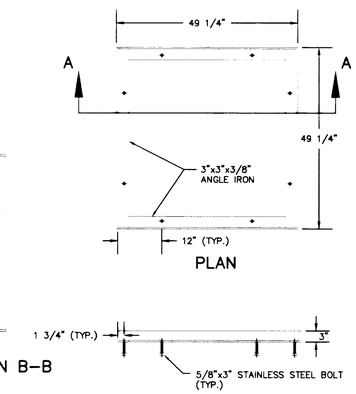

SECTION B-B

PLAN

SECTION A-A

MH PD & PC GRATE DETAIL
NTS

MH PD & PC FRAME DETAIL
NTS

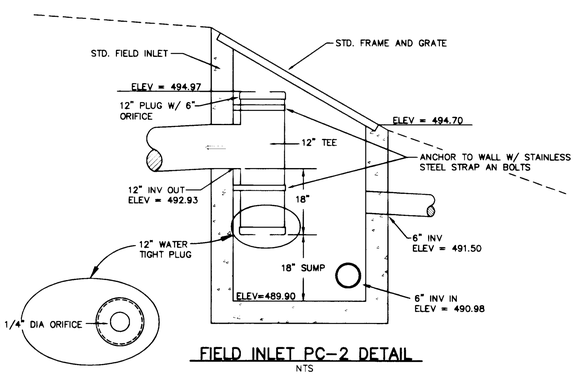

FIELD INLET PC-2 DETAIL
NTS

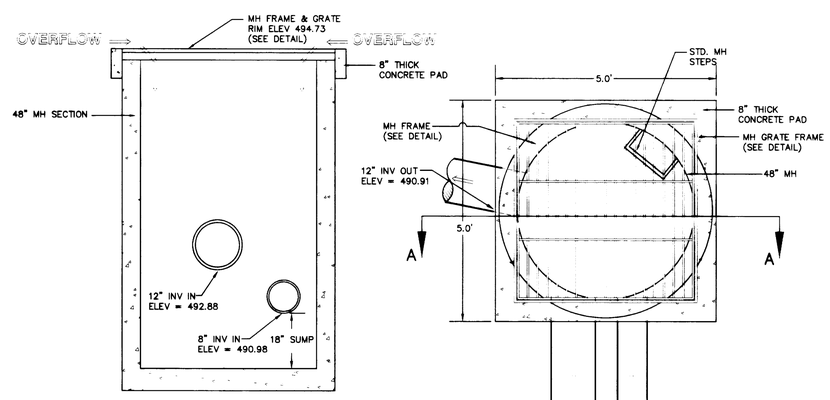

SECTION A-A

PLAN

MANHOLE PC DETAIL
NTS

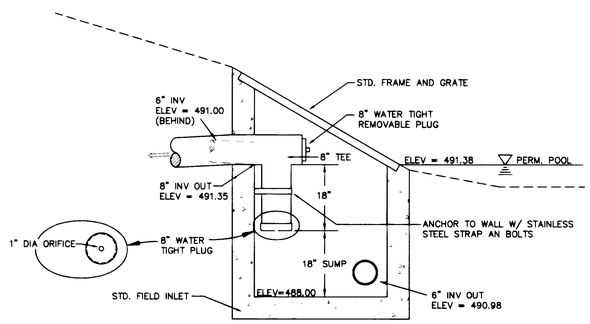

FIELD INLET PC-1 DETAIL
NTS

REGISTERED PROFESSIONAL ENGINEER #18,551 OREGON MAY 18, 1993 PATRICK A. SISUL
5/16/00

REVISIONS	BY
REVISED PER CITY COMMENTS (8/31/99)	MM
REVISED LANDSCAPE NOTE (9/14/99)	MM
REVISED OUTFALL 'C', MH PC&PD (10/20/99)	MM
REVISED POND 'D' (10/25/99)	MM
AS-BUILT 03/17/00	LD

UMPQUA HEIGHTS
RENAISSANCE DEVELOPMENT

Detention Pond Details

SISUL ENGINEERING
3775 PORTLAND AVENUE
GLADSTONE, OREGON 97027
(503) 657-0188
DRAWING 99-22PND.DWG

DATE	JUNE 1999
SCALE	1"=20'
DRAWN	MM
JOB	99-22
SHEET	7
OF	12 SHEETS

GRAPHIC SCALE

50 0 25 50 100 200

(IN FEET)
1 inch = 50 ft.

AS BUILTS

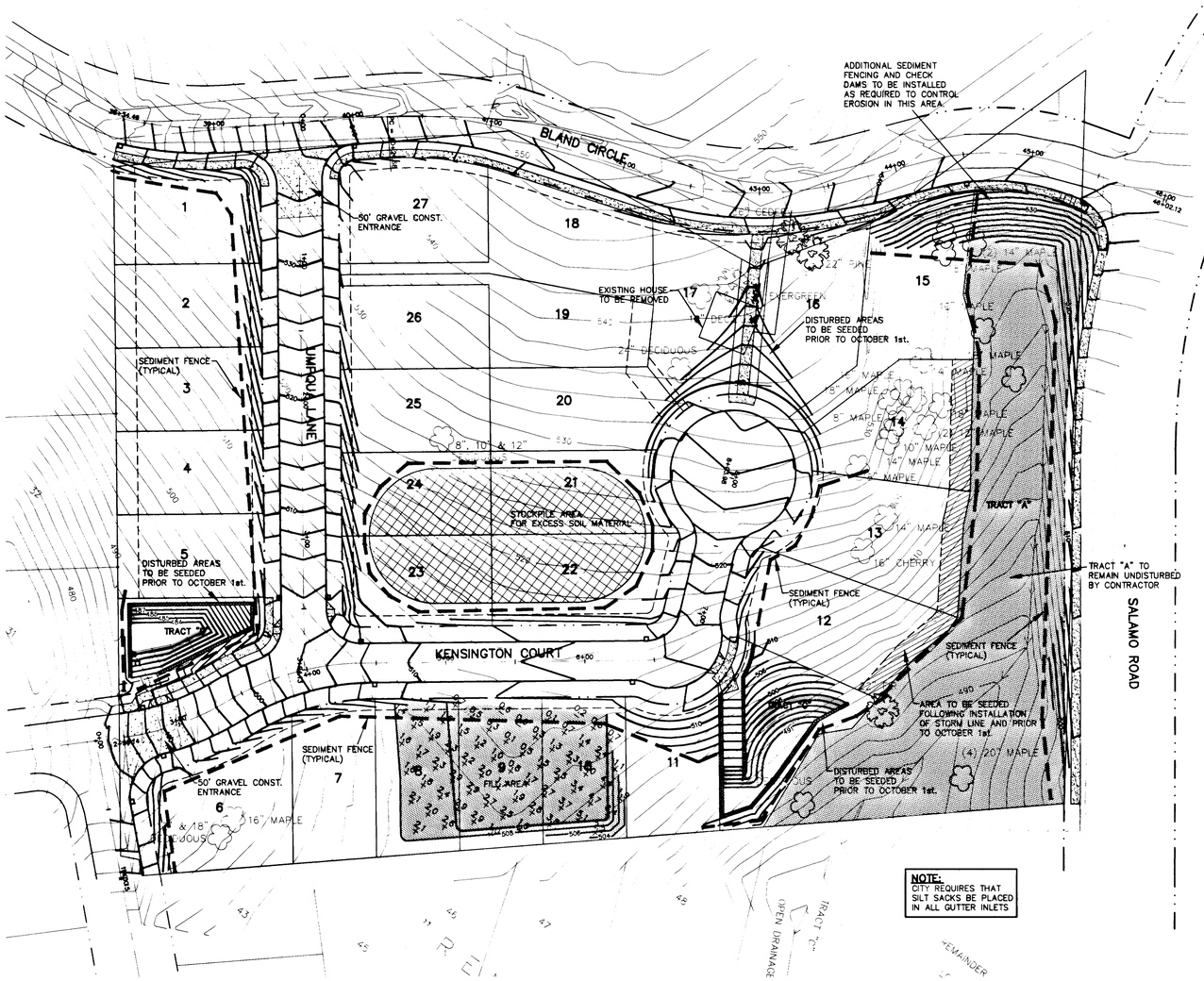

NOTE:
CITY REQUIRES THAT SILT SACKS BE PLACED IN ALL GUTTER INLETS

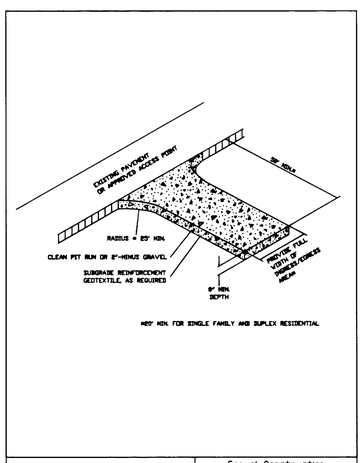

TECHNICAL GUIDANCE HANDBOOK | Gravel Construction Entrance
Detail Drawing 3-1A

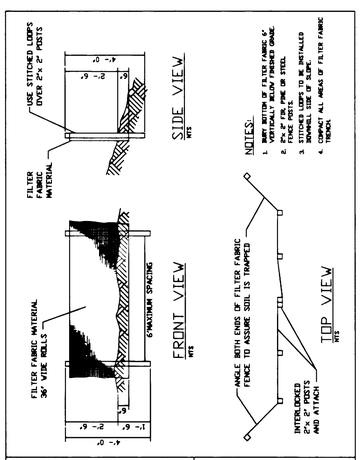

TECHNICAL GUIDANCE HANDBOOK | Sediment Fence
Detail Drawing 3-2

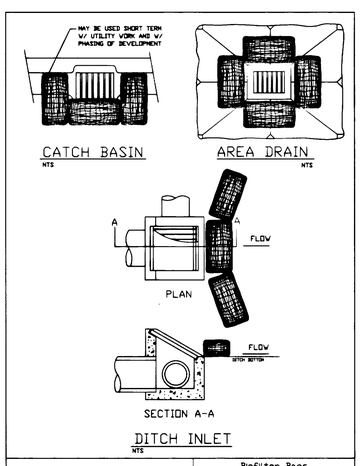

TECHNICAL GUIDANCE HANDBOOK | Biofilter Bags Temporary
Detail Drawing 3-7D

REGISTERED PROFESSIONAL ENGINEER
OREGON
MAY 18, 1993
PATRICK A. SISUL
5/16/00

REVISIONS	BY
ADDED STOCKPILE & SEEDING NOTES.	MM 6/9/99
REVISED PER CITY COMMENTS (8/31/99)	MM
ADDED SILT SACK NOTE (9/14/99)	MM
AS-BUILT 03/17/00	LD

UMPQUA HEIGHTS
RENAISSANCE DEVELOPMENT

Grading and Erosion Control Plan

SISUL ENGINEERING
375 PORTLAND AVENUE
GLADSTONE, OREGON 97027
(503) 657-0188

DRAWING 99-22CD.DWG

DATE	JUNE 1999
SCALE	1"=50'
DRAWN	MM
JOB	99-22
SHEET	8
OF	12 SHEETS

KENSINGTON COURT

SCALE: HORIZ. 1"=20'
VERT. 1"=5'

5+50

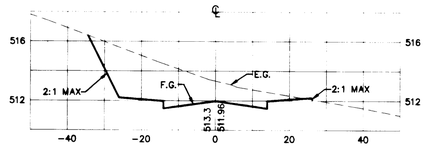

8+00

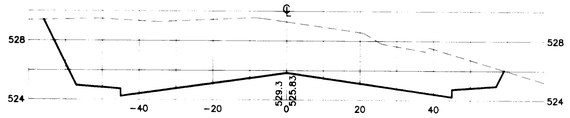

5+00

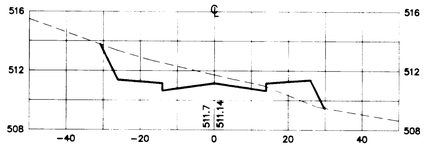

7+50

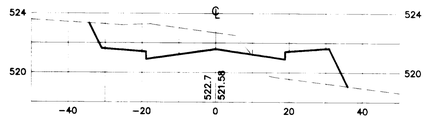

4+50

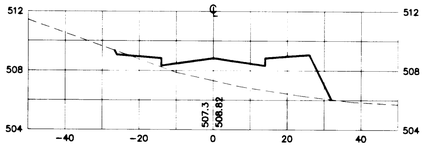

7+00

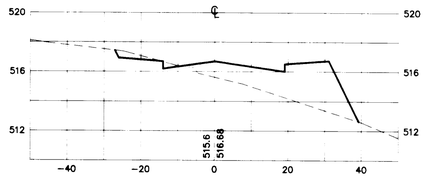

4+00

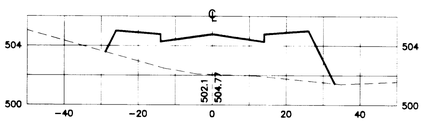

6+50

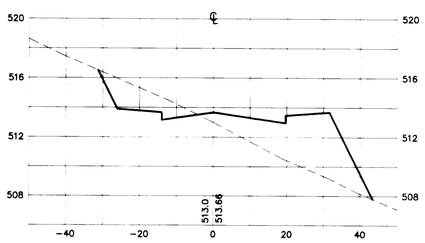

3+50

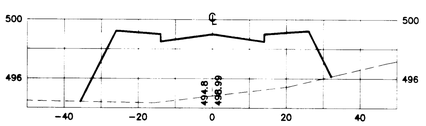

6+00

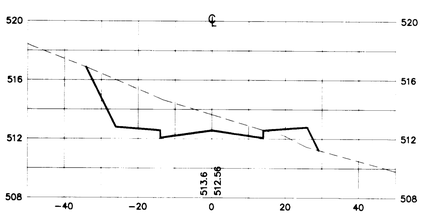

3+00

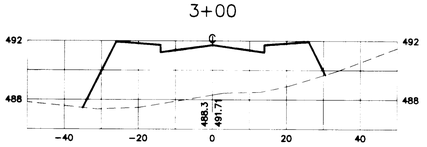

UMPQUA LANE

SCALE: HORIZ. 1"=20'
VERT. 1"=5'

1+50

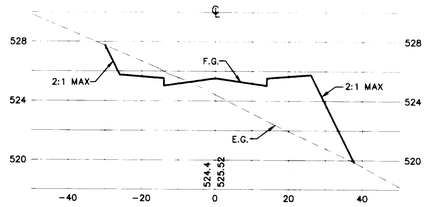

3+50

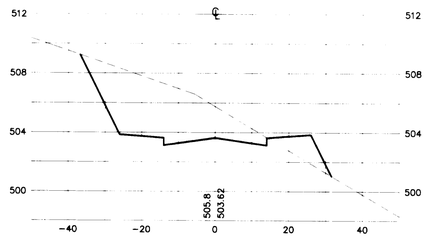

1+00

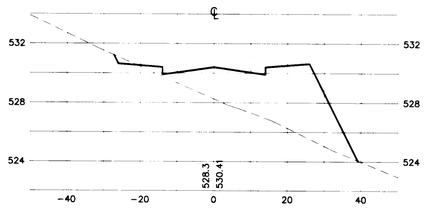

3+00

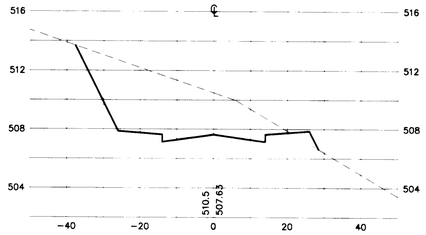

0+50

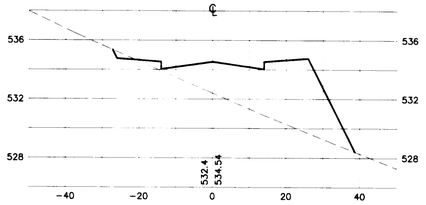

2+50

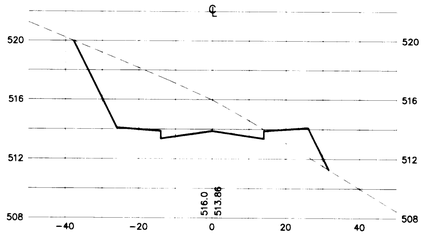

2+00

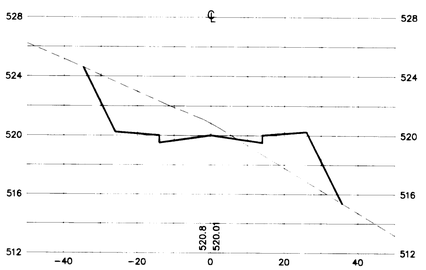

AS BUILTS

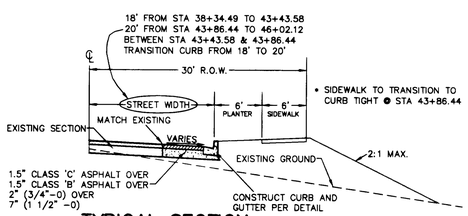

TYPICAL SECTION
BLAND CIRCLE
(NTS)

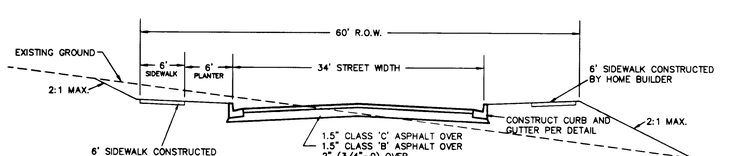

TYPICAL SECTION
KENSINGTON COURT
FROM STA 2+59.14 TO 3+97.98
(NTS)

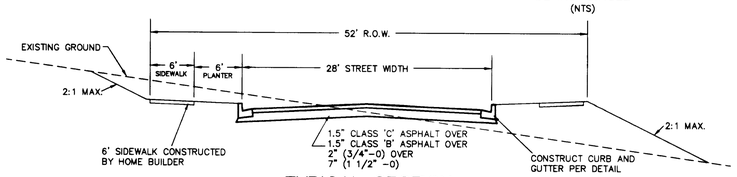

TYPICAL SECTION
KENSINGTON COURT
FROM STA 3+97.98 TO 8+03.98
(NTS)

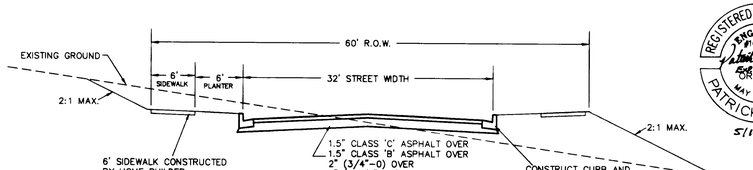

TYPICAL SECTION
UMPQUA LANE
(NTS)

REGISTERED PROFESSIONAL ENGINEER #16,551 OREGON MAY 18, 1993 PATRICK A. SISUL
5/16/00

REVISIONS	BY
AS-BUILT 05/17/00	LD

UMPQUA HEIGHTS
RENAISSANCE DEVELOPMENT

Cross Sections

SISUL ENGINEERING
3775 PORTLAND AVENUE
GLADSTONE, OREGON 97027
(503) 657-0188
DRAWING 99-22CELDWG

DATE	JUNE 1999
SCALE	NOTED
DRAWN	MM
JOB	99-22
SHEET	9
OF	12 SHEETS

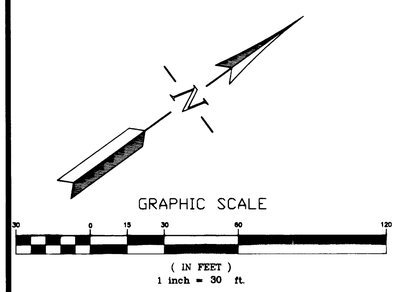

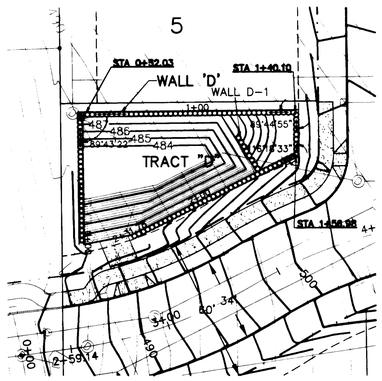

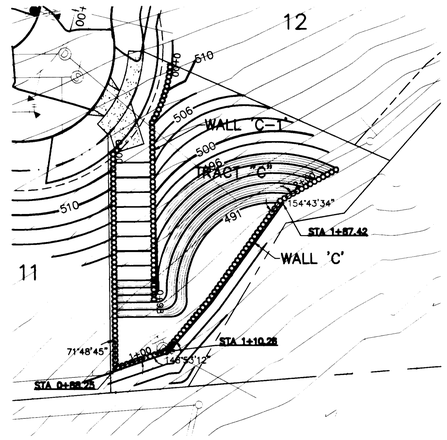

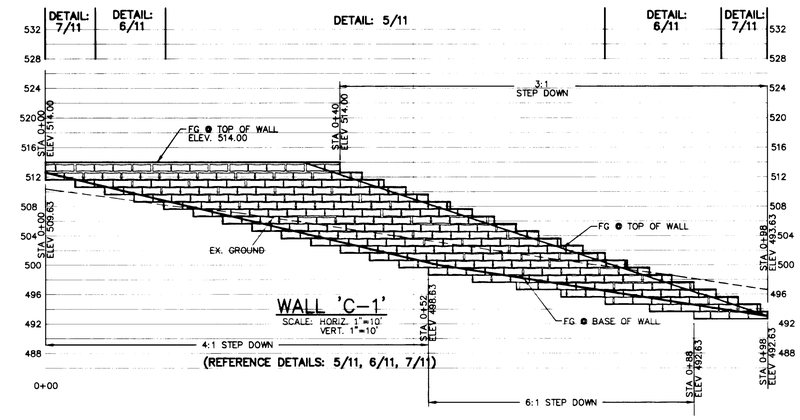

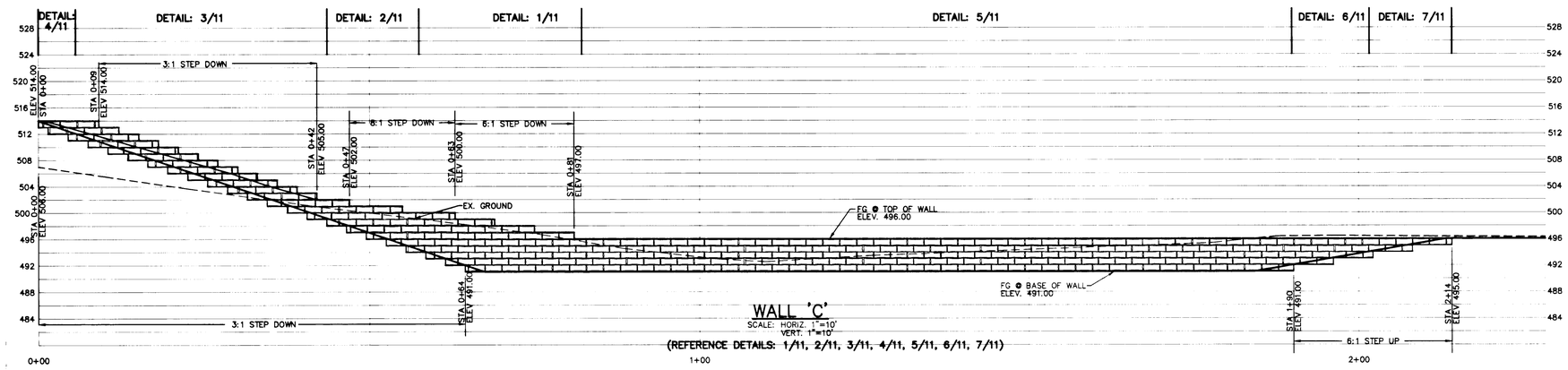

AS BUILTS

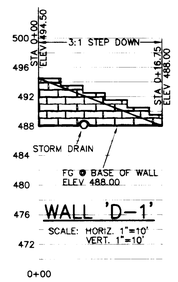

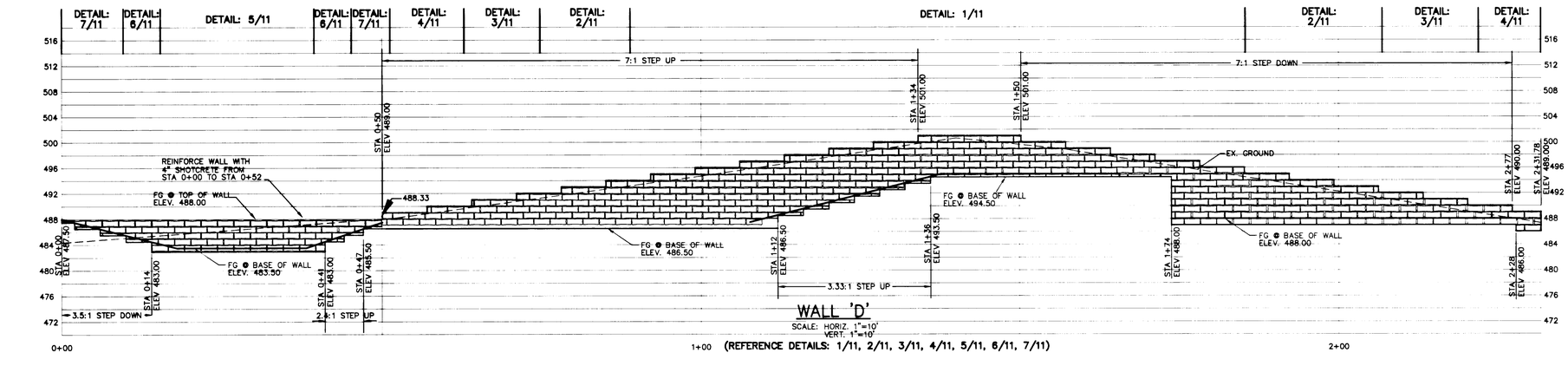

REVISIONS	BY
REVISED PER CITY COMMENTS (8/31/99)	MM
AS-BUILT 03/17/00	LD

UMPQUA HEIGHTS
RENAISSANCE DEVELOPMENT

Retaining Walls

SISUL ENGINEERING
375 PORTLAND AVENUE
GLADSTONE, OREGON 97027
(503) 657-0188

DRAWING: 99-22WALLWC

REGISTERED PROFESSIONAL ENGINEER 616.551 OREGON MAY 18, 1993 PATRICK A. SISUL
5/16/00

DATE	JUNE 1999
SCALE	1"=30'
DRAWN	MM
JOB	99-22
SHEET	10
OF	12 SHEETS

AS BUILTS

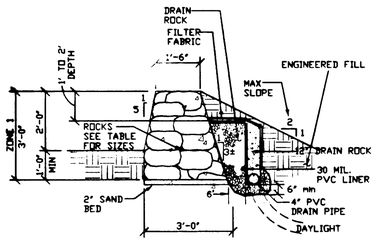

ROCK SIZES PER ZONE AREA				
ZONE	VOLUME (CU. FT.)	WEIGHT (Lbs.) MIN	MAX	SIZE (IN.)
1	1-2	125	350	14-18

7/11 2' ROCKERY WALL WITH 2:1 SLOPE ABOVE

1/2" = 1'-0"

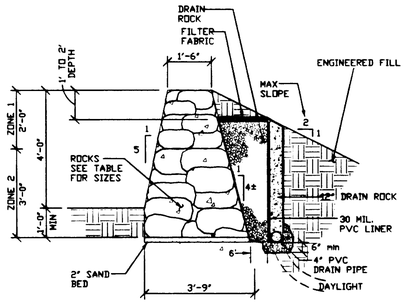

ROCK SIZES PER ZONE AREA				
ZONE	VOLUME (CU. FT.)	WEIGHT (Lbs.) MIN	MAX	SIZE (IN.)
1	1-2	125	350	14-18
2	2-4	350	700	18-24

6/11 4' ROCKERY WALL WITH 2:1 SLOPE ABOVE

1/2" = 1'-0"

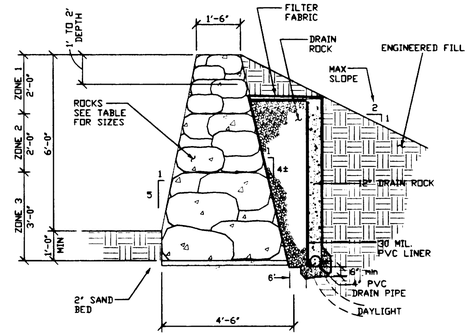

ROCK SIZES PER ZONE AREA				
ZONE	VOLUME (CU. FT.)	WEIGHT (Lbs.) MIN	MAX	SIZE (IN.)
1	1-2	125	350	14-18
2	2-4	350	700	18-24
3	4-8	700	1400	24-30

5/11 6' ROCKERY WALL WITH 2:1 SLOPE ABOVE

1/2" = 1'-0"

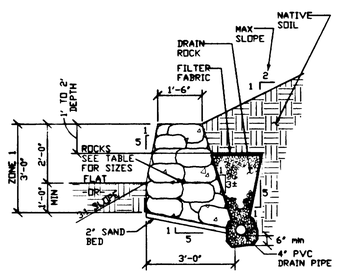

ROCK SIZES PER ZONE AREA				
ZONE	VOLUME (CU. FT.)	WEIGHT (Lbs.) MIN	MAX	SIZE (IN.)
1	1-2	125	350	14-18

4/11 2' ROCKERY WALL WITH 2:1 SLOPE ABOVE

1/2" = 1'-0"

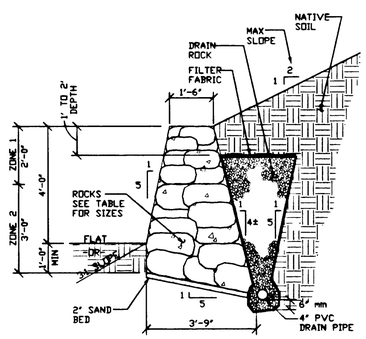

ROCK SIZES PER ZONE AREA				
ZONE	VOLUME (CU. FT.)	WEIGHT (Lbs.) MIN	MAX	SIZE (IN.)
1	1-2	125	350	14-18
2	2-4	350	700	18-24

3/11 4' ROCKERY WALL WITH 2:1 SLOPE ABOVE

1/2" = 1'-0"

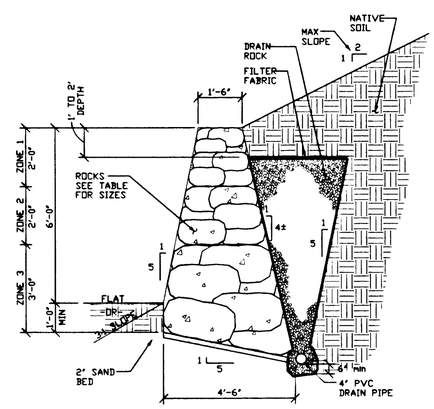

ROCK SIZES PER ZONE AREA				
ZONE	VOLUME (CU. FT.)	WEIGHT (Lbs.) MIN	MAX	SIZE (IN.)
1	1-2	125	350	14-18
2	2-4	350	700	18-24
3	4-8	700	1400	24-30

2/11 6' ROCKERY WALL WITH 2:1 SLOPE ABOVE

1/2" = 1'-0"

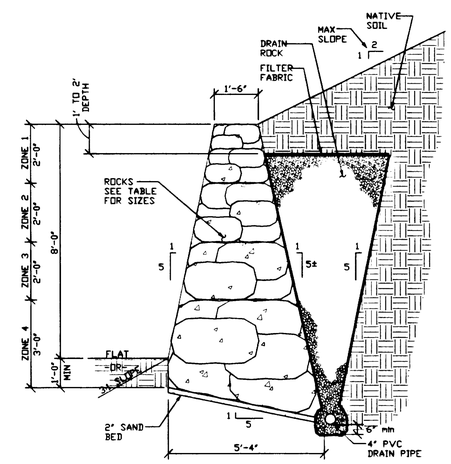

ROCK SIZES PER ZONE AREA				
ZONE	VOLUME (CU. FT.)	WEIGHT (Lbs.) MIN	MAX	SIZE (IN.)
1	1-2	125	350	14-18
2	2-4	350	700	18-24
3	4-8	700	1400	24-30
4	8-16	1400	2800	30-38

1/11 8' ROCKERY WALL WITH 2:1 SLOPE ABOVE

1/2" = 1'-0"

REGISTERED PROFESSIONAL ENGINEER #13551 OREGON MAY 19 1983 PATRICK A. SISUL

5/14/00

REVISIONS	BY
REVISED PER CITY COMMENTS (8/27/99)	MM

UMPQUA HEIGHTS
RENAISSANCE DEVELOPMENT

Retaining Wall Details

SISUL ENGINEERING
375 PORTLAND AVENUE
GLADSTONE, OREGON 97027
(503) 657-0188

DRAWING: 99-22WD1.DWG

DATE	JUNE 1999
SCALE	NOTED
DRAWN	MM
JOB	99-22
SHEET	11
OF	12 SHEETS

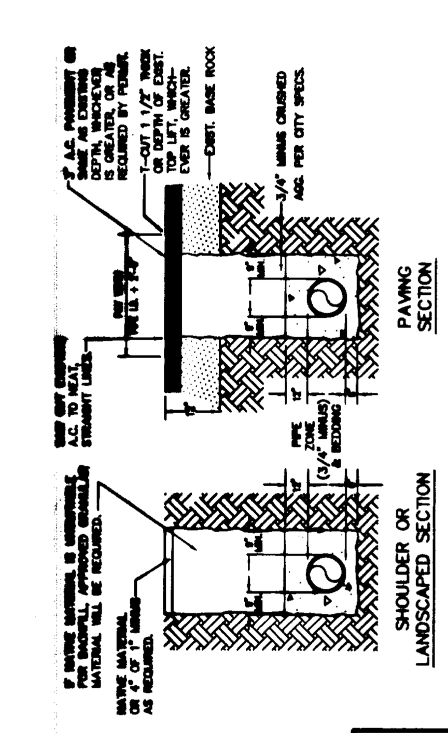

NOTES:

1. ALL WATER MAINS SHALL HAVE A MIN. COVER OF 36".
2. ALL TRENCH BACKFILL SHALL BE COMPACTED TO 95% OF MAX. DENSITY PER AASHTO T-180 OR AS SPECIFIED IN THE CONTRACT DOCUMENTS.
3. ALL TRENCH BACKFILL AND PATCHING SHALL CONFORM TO THE STANDARDS AND SPECIFICATIONS OF THE GOVERNING AGENCY.
4. PAYMENT FOR PAVEMENT CUT AND REPAIR SHALL INCLUDE ALL A.C. AND CRUSHED AGGREGATE 12" BELOW FINISH GRADE.
5. SAND BACKFILL WILL BE REQUIRED IN PIPE ZONE WHEN PIPE LINE IS TO BE POLYBAGGED.
6. BACKFILL SHALL BE PLACED AND COMPACTED IN A MAX. OF 18" LIFTS.

Standard Trench Section

DATE: June 1999
DRAWING NO. WL-401
FILE NO.

NOTES:

1. HYDRANTS TO BE MUELLER CENTURION MDL A-423 ONLY WITH 1 1/2" OPER. NUTS OR CLOW MEDDALION F-2546.
2. HYDRANT COLOR TO BE MILLER EQUIP. ENAMEL 0 E 40 (SAFETY YELLOW).
3. JOINTS TO BE RESTRAINED BY 3/4" DIA. GALVANIZED STEEL RODS AND THRUST BLOCKS OR MEGA LUGS AND THRUST BLOCKS.
4. ALL FITTINGS IN CONTACT W/CONCRETE SHALL BE WRAPPED IN PLASTIC. HYDRANT DRAIN HOLES TO REMAIN OPEN TO DRAIN ROCK AND OPERATIONAL.
5. MIN. 4 CU. FT. OF 1 1/2"-3/4" CLEAN DRAIN ROCK SHALL BE PLACED AROUND SHOE UP TO A MIN. OF 6" ABOVE DRAIN OUTLETS.
6. WHERE PLANTER STRIP EXISTS, HYDRANT SHALL BE PLACED SO FRONT PORT IS A MINIMUM OF 24" BEHIND FACE OF CURB.
7. WHERE INTEGRAL S/W & CURB EXISTS, HYD. SHALL BE PLACED AT BACK OF SIDEWALK, OR AS DIRECTED BY ENGINEER.
8. BURY OF HYDRANT SHALL BE MEASURED FROM FINISHED GRADE TO BOTTOM OF CONNECTING PIPE.
9. THRUST BLOCK AT FIRE HYDRANT TEE SHALL HAVE A 3.7 SQ. FT. BEARING AREA.
10. HYDRANT VALVE SHALL BE MUELLER RESILIENT WEDGE GATE VALVE #A-2380-16 ONLY.
11. WHERE NO SIDEWALK EXISTS, PLACE A 5'x 5'x 4" THICK A.C. OR CONC. APRON AROUND HYDRANT.
12. NO EXTENTIONS ALLOWED.

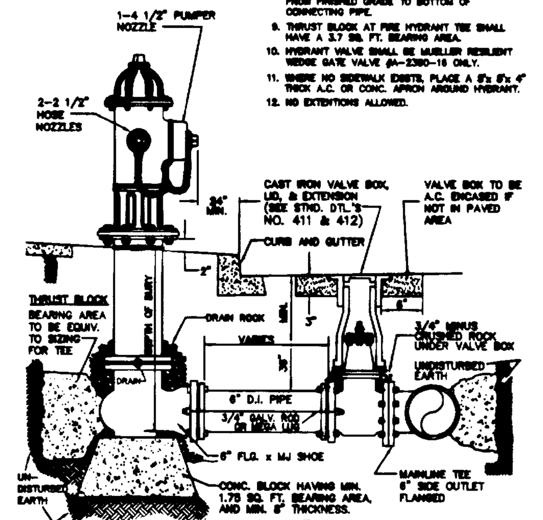

Standard Fire Hydrant Assembly

DATE: June 1999
DRAWING NO. WL-400
FILE NO.

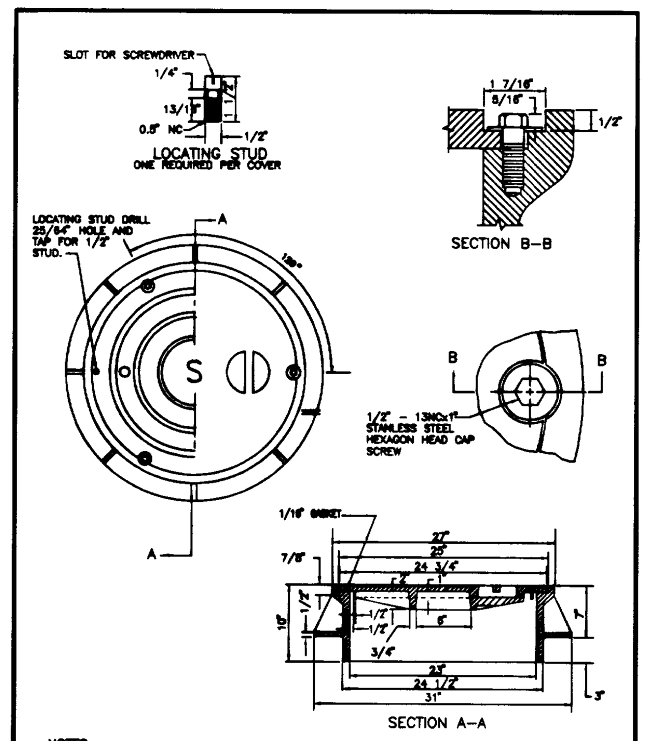

NOTES:
1. COVER AND FRAME TO BE MACHINED TO A TRUE BEARING ALL AROUND.
2. MATERIAL SHALL BE OF GRAY CAST IRON A.S.T.M. A-48 CLASS 30.
3. 2 HOLE LID FOR SANITARY SEWER
4. 16 HOLE LID FOR STORM SEWER

Waterproof and Tamperproof Manhole Frame and Cover

DATE: June 1999
DRAWING NO. WL-314
FILE NO.

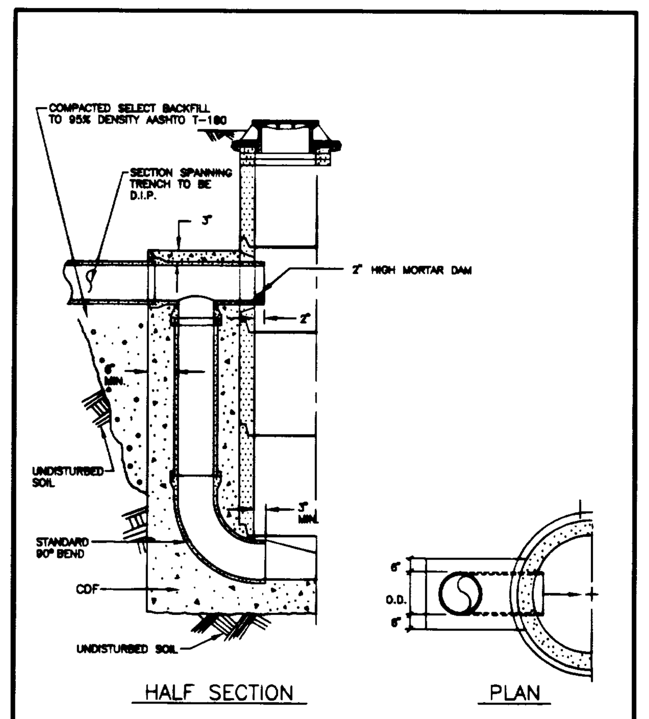

Outside Drop Manhole

DATE: June 1999
DRAWING NO. WL-308
FILE NO.

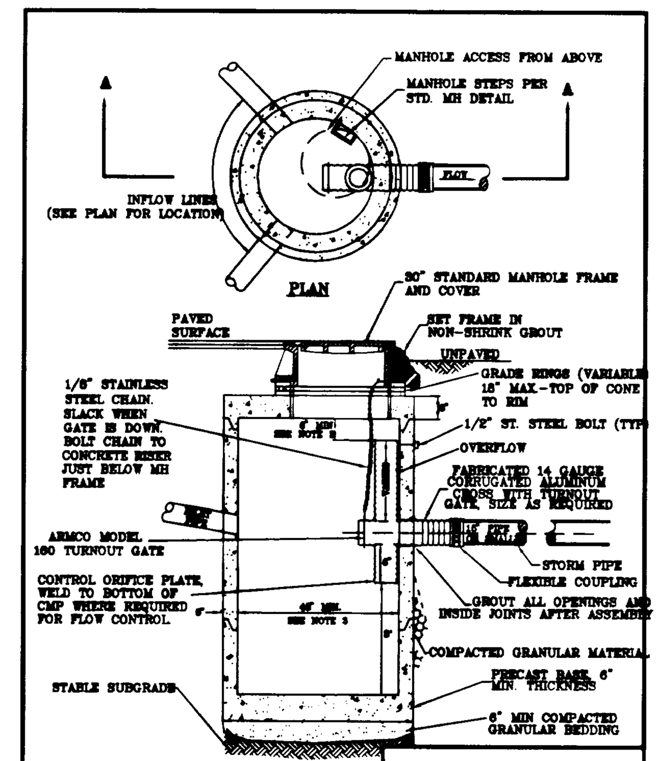

NOTES:
1. ALL PRECAST SECTIONS SHALL CONFORM TO THE REQUIREMENTS OF ASTM C-478.
2. DISTANCE FROM TOP OF OVERFLOW TO MH RIM SHALL BE BASED ON OVERFLOW CAPACITY CALC'S BY DESIGN ENGINEER. ASSUME ORIFICE CONTROL.
3. 60" MINIMUM DIA. MANHOLE REQUIRED FOR OUTLET PIPE LARGER THAN 18" OR INLET > 21".

Pollution/ Flow Control Manhole

DATE: July 1999
DRAWING NO. WL-618
FILE NO.

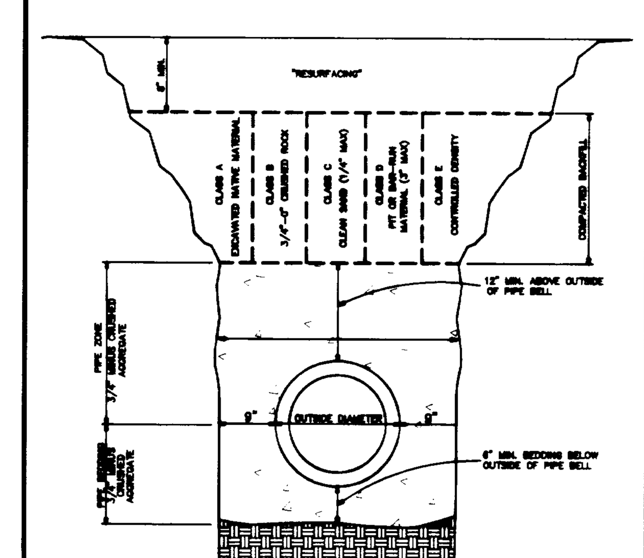

Trench Backfill, Bedding and Pipe Zone

DATE: June 1999
DRAWING NO. WL-301
FILE NO.

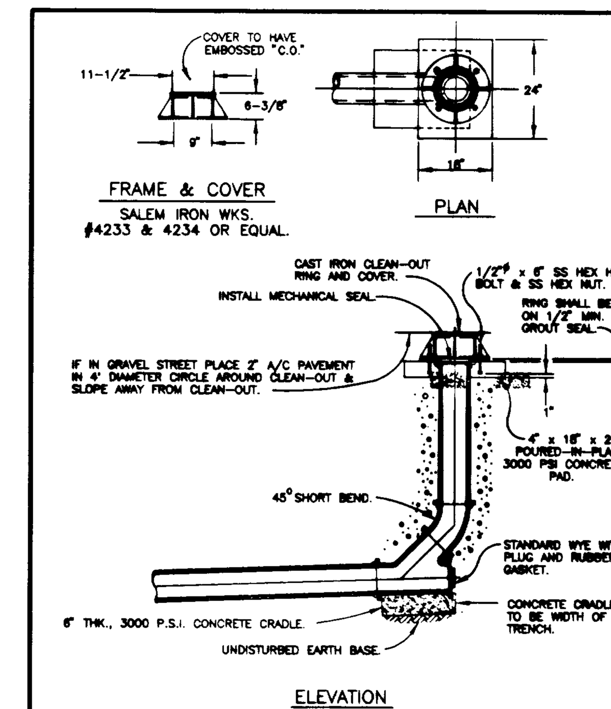

Standard Clean Out

DATE: June 1999
DRAWING NO. WL-300
FILE NO.

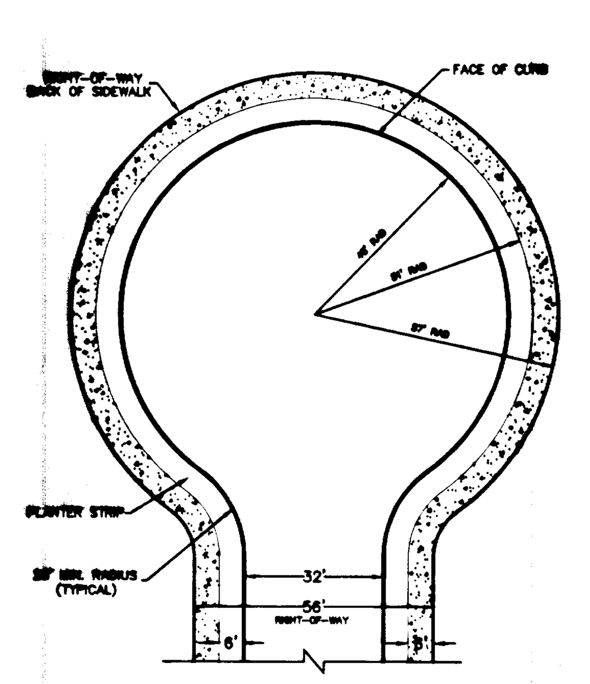

Standard Cul-De-Sac

DATE: June 1999
DRAWING NO. WL-502
FILE NO.

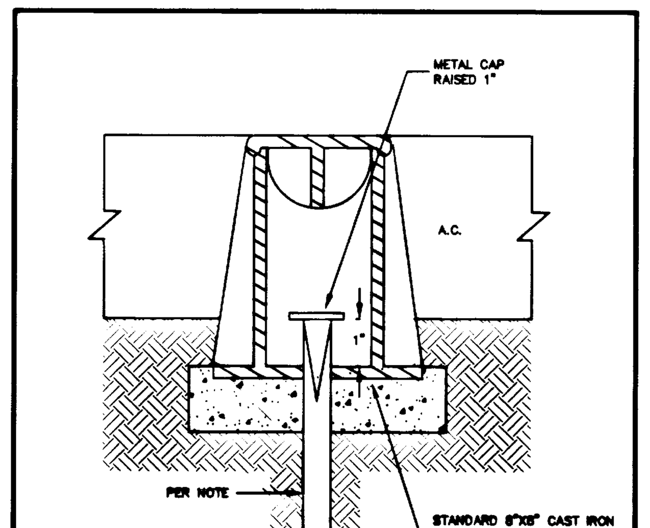

NOTES: ALL MONUMENTS SHALL USE EITHER 5/8" DIA.X 30" LONG IRON ROD OR 3/4" DIA.X 30" LONG IRON PIPE.

ALL MONUMENTS SHALL BE IN ACCORDANCE WITH ORS 209.250(4).

CONCRETE SHALL BE CLASS 3000.

FRAME AND COVER SHALL BE CAST IRON OR ALUMINUM.

COVER SHALL HAVE "MONUMENT" CAST INTO TOP.

Centerline Survey Monuments

DATE: June 1999
DRAWING NO. WL-501
FILE NO.

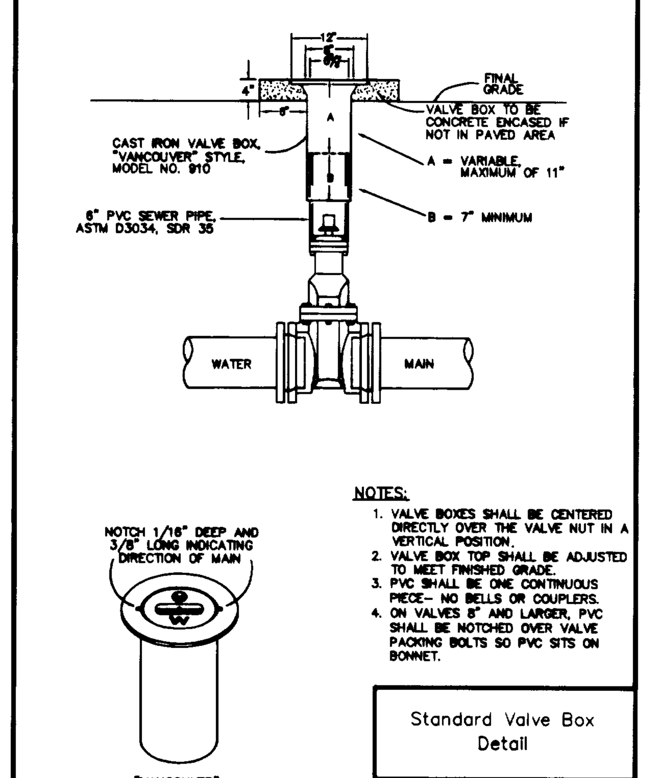

NOTES:
1. VALVE BOXES SHALL BE CENTERED DIRECTLY OVER THE VALVE NUT IN A VERTICAL POSITION.
2. VALVE BOX TOP SHALL BE ADJUSTED TO MEET FINISHED GRADE.
3. PVC SHALL BE ONE CONTINUOUS PIECE- NO BELLS OR COUPLERS.
4. ON VALVES 8" AND LARGER, PVC SHALL BE NOTCHED OVER VALVE PACKING BOLTS SO PVC SITS ON BONNET.

Standard Valve Box Detail

DATE: June 1999
DRAWING NO. WL-411
FILE NO.

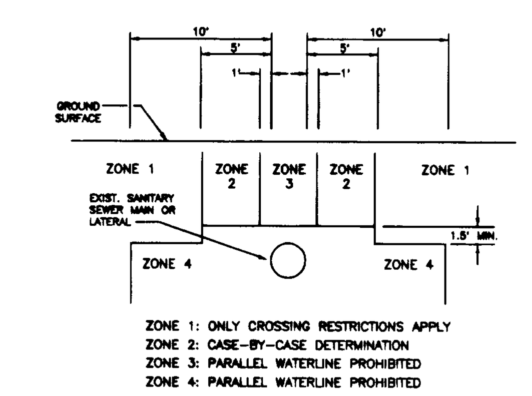

ZONE 1: ONLY CROSSING RESTRICTIONS APPLY
ZONE 2: CASE-BY-CASE DETERMINATION
ZONE 3: PARALLEL WATERLINE PROHIBITED
ZONE 4: PARALLEL WATERLINE PROHIBITED

NOTES:
1. WHERE THE PROPOSED WATERLINE WILL BE INSTALLED PARALLEL TO AN EXISTING GRAVITY SANITARY SEWER MAIN OR LATERAL LINE, THE SEPARATION BETWEEN THE TWO SHALL BE AS INDICATED ABOVE.
2. CROSSINGS:
   a.) WHEREVER POSSIBLE, THE BOTTOM OF THE WATERLINE SHALL BE 1.5 FEET ABOVE THE TOP OF THE SEWER LINE, AND ONE FULL LENGTH OF WATERLINE SHALL BE CENTERED AT THE CROSSING.
   b.) WHERE IT IS NOT POSSIBLE FOR THE WATER LINE TO BE 1.5 FEET ABOVE THE SEWER LINE, OR THE WATERLINE PASSES UNDER THE SEWER LINE, THE EXISTING SEWER LINE SHALL BE EXPOSED FOR A DISTANCE OF 10 FEET ON EACH SIDE OF THE CROSSING, AND SHALL BE REPLACED WITH C-900 PVC, DR-18, DR-25 OR CLASS 50 DUCTILE IRON PIPE AS APPROVED BY THE ENGINEER, AND A LENGTH OF WATER PIPE SHALL BE CENTERED AT THE CROSSING, OR AS APPROVED BY THE ENGINEER.

Standard Sanitary Sewer Crossing

DATE: June 1999
DRAWING NO. WL-409
FILE NO.

NOTES:
1. GRAVITY VERTICAL THRUST BLOCKS SHALL BE DESIGNED BY THE ENGINEER.
2. KEEP CONCRETE CLEAR OF JOINT AND JOINT ACCESSORIES. FITTINGS SHALL BE WRAPPED IN PLASTIC PRIOR TO PLACEMENT OF CONCRETE.
3. CONCRETE THRUST BLOCKING SHALL BE POURED AGAINST UNDISTURBED EARTH.
4. CONCRETE MIX SHALL HAVE A MIN. 28 DAY STRENGTH OF 3000 P.S.I.
5. THRUST BLOCK VOLUMES FOR VERTICAL BENDS HAVING UPWARD RESULTANT THRUSTS ARE BASED ON TEST PRESSURE OF 150 P.S.I.G. AND THE WEIGHT OF CONCRETE = 4050 LBS./CU.YD.
6. VERTICAL BENDS THAT REQUIRE A THRUST BLOCK VOLUME EXCEEDING 5 CUBIC YARDS REQUIRE SPECIAL BLOCKING DETAILS. SEE PLANS FOR VOLUMES SHOWN INSIDE HEAVY LINE IN TABLE.
7. PAYMENT SHALL BE THE SAME AS FOR HORIZONTAL THRUST BLOCKS.
8. ALL REBAR SHALL BE GALVANIZED IN ACCORDANCE WITH ASTM-123 (MIN. 3.4 MIL). REBAR SHALL BE BENT BEFORE GALVANIZATION, AND LAST 4" OF BAR SHALL BE BENT 90 DEGREES WITH A 1/2" RADIUS BEND. REBAR SHALL BE TIGHTLY FIT TO RESTRAINED FITTING.
9. FOR HORIZONTAL THRUST BLOCK DETAILS SEE DWG NO. 406

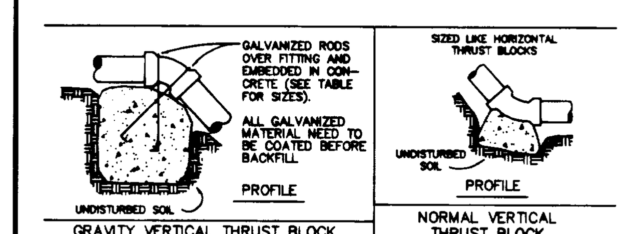

GRAVITY VERTICAL THRUST BLOCK

NORMAL VERTICAL THRUST BLOCK

VOLUME OF THRUST BLOCK IN CUBIC YARDS (VERTICAL BENDS)

FITTING SIZE	BEND ANGLE 45°	22 1/2°	11 1/4°
4	1.1	0.4	0.2
6	2.7	1.0	0.4
8	4.0	1.5	0.6
10	6.0	2.3	0.9
12	8.5	3.2	1.3
14	11.5	4.3	1.8
16	14.8	5.6	2.3

FITTING SIZE	ROD SIZE	EMBED-MENT
12" AND LESS	#6	30"
14" - 16"	#8	36"

Vertical Thrust Blocking

DATE: June 1999
DRAWING NO. WL-407
FILE NO.

FITTING SIZE (inches)	TEE, WYE, & ① HYDRANTS	STRADDLE BLOCK ②	90° BEND ③ PLUGGED CROSS TEE PLUGGED-RUNS	45° BEND ④	22 1/2° BEND ⑤	11 1/2° BEND ⑥
2	*	*	*	*	*	*
4	1.7	2.1	2.4	1.3	*	*
6	3.7	4.9	5.3	2.9	1.5	*
8	6.7	8.7	9.5	5.1	2.7	1.3
10	10.5	13.8	14.8	8	4.1	2
12	15.1	19.6	21.3	11.6	5.9	2.9
14						
16	28.8	34.8	37.9	20.5	10.4	5.2
18	33.9	44	47.9	25.9	12.6	6.7
LARGER	**	**	**	**	**	**

BEARING AREA OF THRUST BLOCKS (sq. ft.)

1. ALL VALUES ARE BASED ON THE FOLLOWING ASSUMPTIONS: AVG. PRESSURE = 100 PSI X 2 (safety factor); 1500 PSF SOIL BEARING CAPACITY; NORMAL DISTRIBUTION DESIGN VELOCITY NOT TO EXCEED 5 F/S.
2. ALL FITTINGS SHALL BE WRAPPED IN PLASTIC PRIOR TO PLACEMENT OF CONCRETE.
3. BEARING SURFACE OF THRUST BLOCKING SHALL BE AGAINST UNDISTURBED SOIL
4. ALL CONCRETE MIX SHALL HAVE A MIN. 28 DAY STRENGTH OF 3000 PSI.
5. ALL PIPE ZONES SHALL BE GRAVEL FILLED AND COMPACTED.
6. THRUST BLOCKS FOR PLUGGED CROSS AND PLUGGED TEE SHALL HAVE #4 REBAR LIFTING LOOPS INSTALLED AS SHOWN.
7. VERTICAL THRUST DETAILS—SEE DWG. 407
8. STRADDLE BLOCK DETAILS—SEE DWG. #406

* BLOCK TO UNDISTURBED TRENCH WALLS

** THRUST BLOCKS FOR PIPES LARGER THAN 18" WILL BE INDIVIDUALLY DESIGNED BY THE ENGINEER.

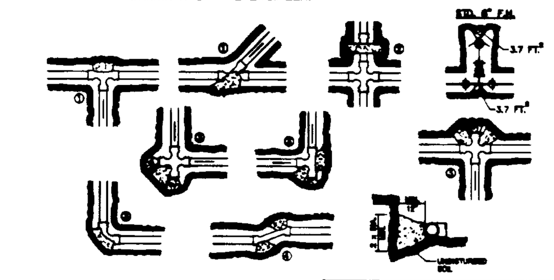

Horizontal Thrust Blocking

DATE: June 1999
DRAWING NO. WL-406
FILE NO.

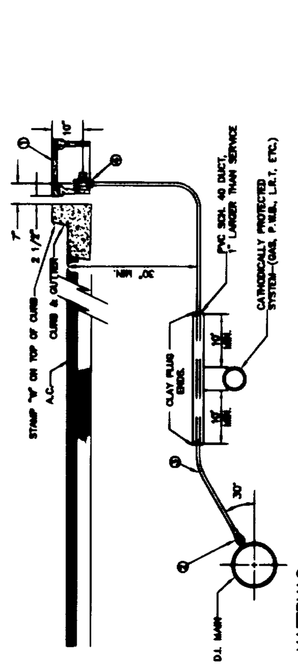

MATERIALS:
1. BROOKS METER BOX, BODY NO. 37, LID AND COVER NO. 37-S.
2. MUELLER CORP. STOP NO. H-15008 OR FORD F1000-4G SET CORP. STOP WITH OPERATING NUT AT 3 OR 9 O'CLOCK.
3. 1" SOFT TEMPER, TYPE 'K' COPPER TUBING COMPLYING WITH ASTM B-88.
4. MUELLER ANGLE METER STOP NO. H-14258 (FORD NO. KV43-444W-G).

NOTES:
1. SUBSTITUTES FOR ANY MATERIALS SHOWN SHALL BE APPROVED BY THE CITY ENGINEER.
2. ALL PIPE AND STRUCTURE ZONES SHALL BE BACKFILLED USING 3/4" MINUS CRUSHED AGG. AND COMPACTED TO 95% MAX DENSITY AS DETERMINED BY AASHTO T-180.
3. WHEN AN ACTIVE CATHODIC PROTECTED SYSTEM IS ENCOUNTERED, SCH. 40 PVC SHALL BE INSTALLED AS SHOWN ABOVE WITH CLAY PLUG.
4. METER BOX SHALL BE CENTERED OVER THE COMPLETED METER ASSEMBLY.
5. FOR VACANT RESIDENTIAL LOTS, LOCATE SINGLE SERVICE 18" INSIDE SIDE LOT LINE.
6. TAPS INTO MAIN TO BE AT 18" CENTERLINE MIN.
7. ANGLE METER STOPS TO BE 18" FROM PROPERTY LINE AND NOT IN DRIVEWAY APPROACH.

Standard 1" Water Service

DATE: June 1999
DRAWING NO. WL-402
FILE NO.

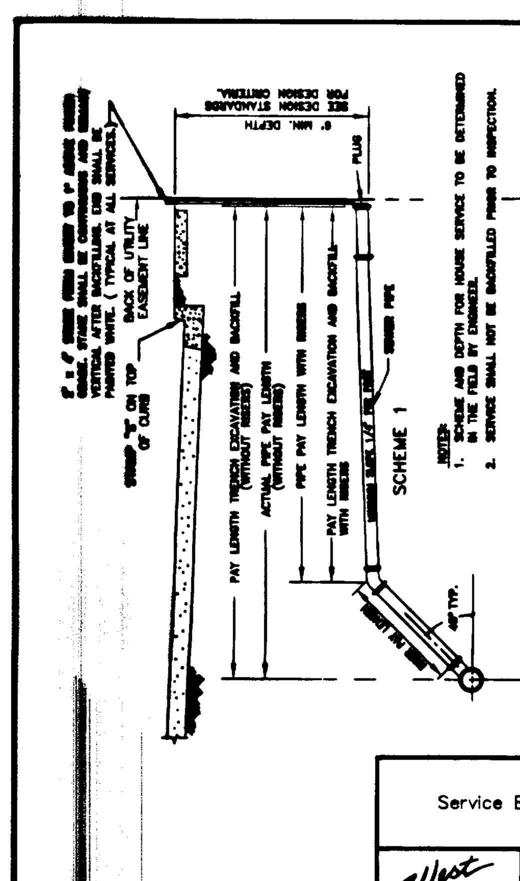

NOTES:
1. SCHEME AND DEPTH FOR HOUSE SERVICE TO BE DETERMINED IN THE FIELD BY ENGINEER.
2. SERVICE SHALL NOT BE BACKFILLED PRIOR TO INSPECTION.

Service Branch

DATE: June 1999
DRAWING NO. WL-315
FILE NO.

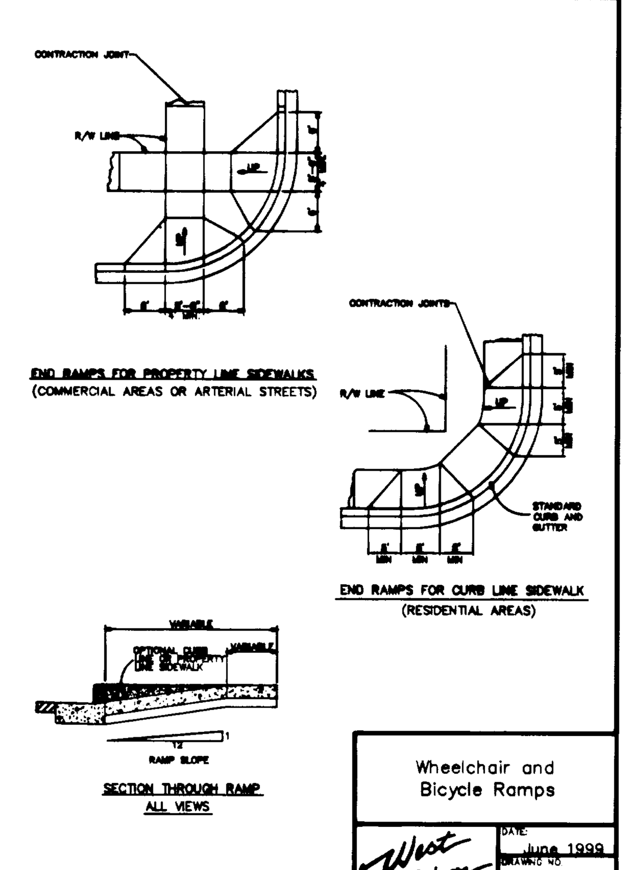

Wheelchair and Bicycle Ramps

DATE: June 1999
DRAWING NO. WL-506
FILE NO.

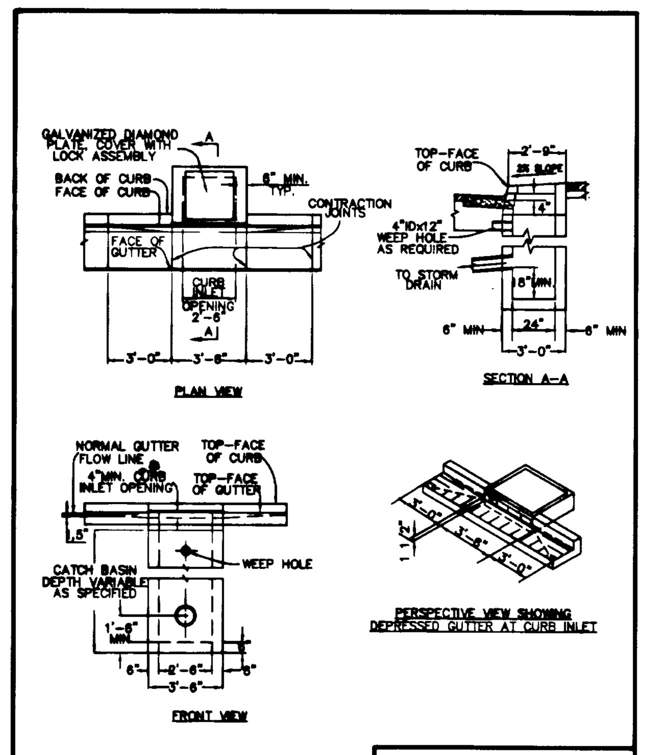

NOTES:
1. ALL FABRICATED METAL PARTS SHALL BE HOT-DIPPED GALVANIZED AFTER FABRICATION.
2. CONCRETE SHALL BE CLASS 3000.
3. FOR STEEP GRADES USE INLET WITH 4'-0" OPENING OR TWO 2'-6" OPENING INLETS.
4. CURB INLET BASE MAY BE PRECAST OR CAST-IN-PLACE.
5. DIMENSIONS SHOWN ON ATTACHED TABLE
6. FOR SLOPES OF 5% OR GREATER, USE DWGS. 601 AND 602

Gutter Inlet 2 1/2 A

DATE: June 1999
DRAWING NO. WL-600
FILE NO.

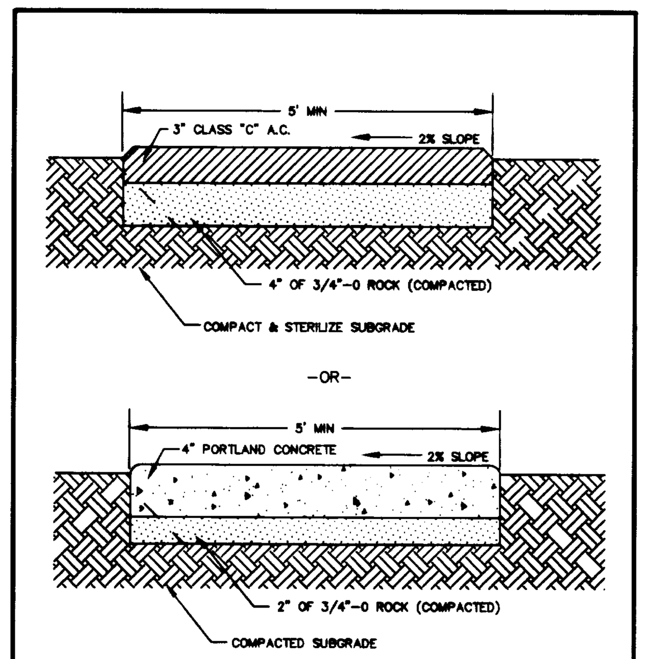

NOTES
1. CONCRETE SHALL BE 3000 PSI AT 28 DAYS, SIX SAC MIX, SLUMP RANGE OF 1 1/2"-3"
2. SIDEWALK PANELS SHALL BE SQUARE, 3/4" DEEP SCRIBES AT JOINTS, EDGED ON 4 SIDES AND HAVE A LIGHT BROOM FINISH.

Pedestrian Path or Bikeway

DATE: June 1999
DRAWING NO. WL-510
FILE NO.

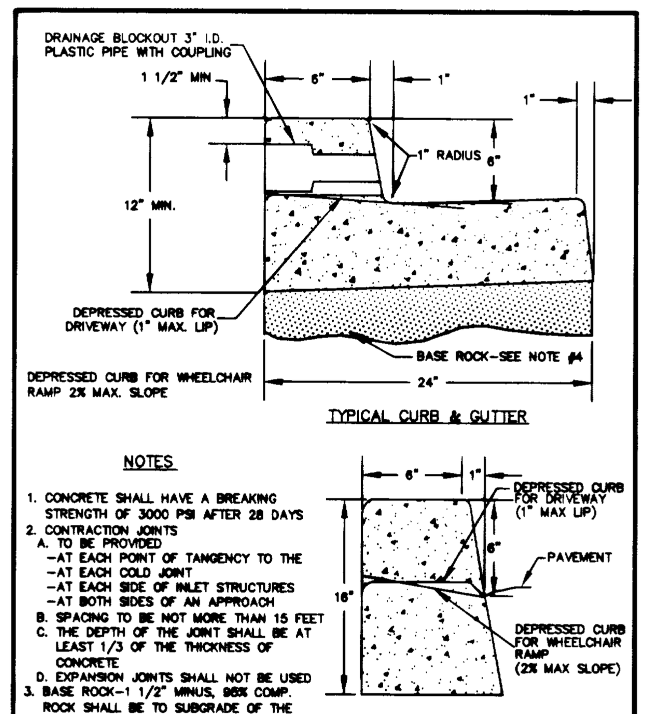

NOTES
1. CONCRETE SHALL HAVE A BREAKING STRENGTH OF 3000 PSI AFTER 28 DAYS
2. CONTRACTION JOINTS
   A. TO BE PROVIDED
   -AT EACH POINT OF TANGENCY TO THE
   -AT EACH COLD JOINT
   -AT EACH SIDE OF INLET STRUCTURES
   -AT BOTH SIDES OF AN APPROACH
   B. SPACING TO BE NOT MORE THAN 15 FEET
   C. THE DEPTH OF THE JOINT SHALL BE AT LEAST 1/3 OF THE THICKNESS OF CONCRETE
   D. EXPANSION JOINTS SHALL NOT BE USED
3. BASE ROCK-1 1/2" MINUS, 95% COMP. ROCK SHALL BE TO SUBGRADE OF THE STREET STRUCTURE OF 4" IN DEPTH, WHICHEVER IS GREATER
4. DRAINAGE BLOCK-3" DIA. PLASTIC PIPE
   A. DRAINAGE ACCESS THROUGH EXISTING CURBS SHALL BE DONE BY:
   -CORE DRILLING
   -VERTICAL SAW-CUT OF CURB 18" EACH SIDE OF DRAIN & REPOURED TO FULL DEPTH OF CURB.

Standard Curb & Gutter

DATE: June 1999
DRAWING NO. WL-507
FILE NO.

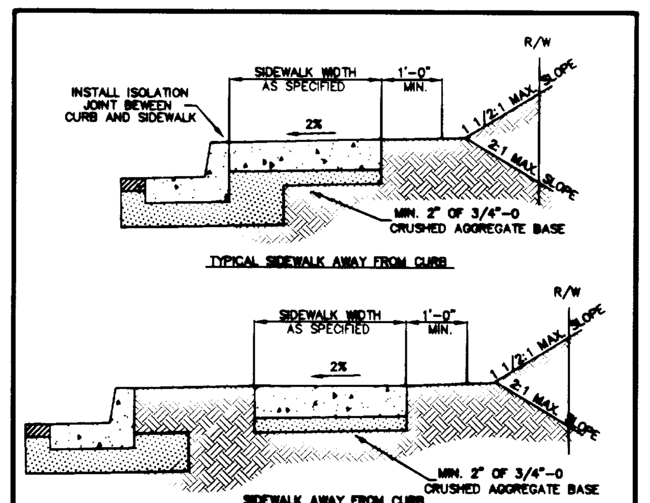

NOTES
1. CONCRETE SHALL BE 3000 PSI AT 28 DAYS, 6 SACK MIX, SLUMP RANGE OF 1 1/2" TO 3".
2. PANEL LENGTHS SHALL BE EQUAL TO THE SIDEWALK WIDTH, BUT MAY BE ADJUSTED WITH THE CITY ENGINEER'S APPROVAL.
3. CONTRACTION JOINTS (1/3RD OF THE THICKNESS OF CONCRETE) SHALL BE PLACED EVERY THIRD PANEL, WITH A MAX. SPACING OF 15 FEET. JOINTS SHALL ALSO BE PLACED AT THE SIDES OF DRIVEWAY APPROACHES, UTILITY VAULTS, AND WHEELCHAIR RAMPS.
4. A CURING COMPOUND SHALL BE USED. WHITE REFLECTIVE SHEETING SHALL BE USED IN CASE OF RAIN.
5. FOR SIDEWALKS ADJACENT TO THE CURB AND POURED AT THE SAME TIME AS THE CURB, THE JOINT BETWEEN THEM SHALL BE A TROWELED JOINT WITH A MIN. 1/2" RADIUS.
6. THE SIDEWALK SHALL HAVE A MIN. THICKNESS OF 6" IF MOUNTABLE CURB IS USED OR IF THE SIDEWALK IS INTENDED AS A PORTION OF THE DRIVEWAY. OTHERWISE, THE SIDEWALK SHALL HAVE A MIN. THICKNESS OF 4".
7. DRAIN BLOCKOUTS IN THE CURB SHALL BE EXTENDED TO THE BACK OF THE SIDEWALK WITH A 3" DIA. PLASTIC PIPE AT A 2% SLOPE. A CONTRACTION JOINT SHALL BE PLACED OVER THE PIPE.

Concrete Sidewalk Cross Section

DATE: June 1999
DRAWING NO. WL-505
FILE NO.

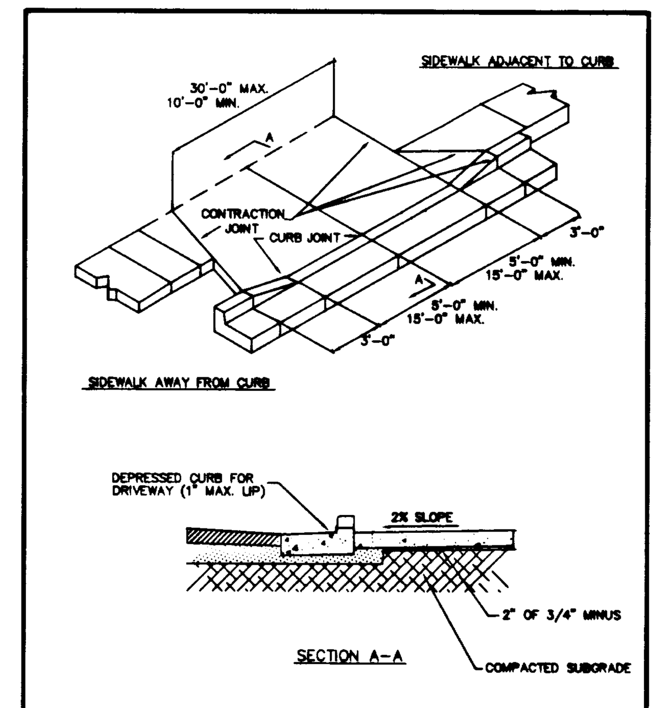

NOTES
1. CONCRETE SHALL HAVE A MINIMUM BREAKING STRENGTH OF 3000 PSI AFTER 28 DAYS, 6 SACK MIX.
2. CURB SHALL BE TROWELED JOINT WITH A MIN. 1/2" RADIUS ALONG BACK OF CURB.
3. DRIVEWAY SHALL BE A MINIMUM 6" THICK.

Residential Driveway

DATE: June 1999
DRAWING NO. WL-503
FILE NO.

REVISIONS	BY
REVISED PER CITY COMMENTS (8/30/99)	MM
AS-BUILT (5/15/00)	MM

UMPQUA HEIGHTS
RENAISSANCE DEVELOPMENT

Details

AS-BUILT

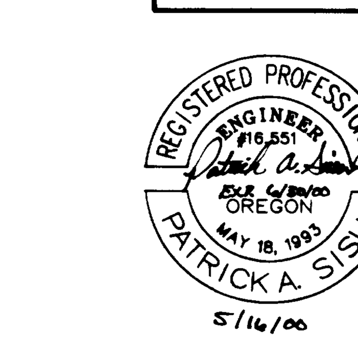

5/16/00

SISUL ENGINEERING
375 PORTLAND AVENUE
GLADSTONE, OREGON 97027
(503) 657-0188
DRAWING: 99-22DET.DWG

DATE	JUNE 1999
SCALE	NOTED
DRAWN	MM
JOB	99-22
SHEET	12
OF 12	SHEETS