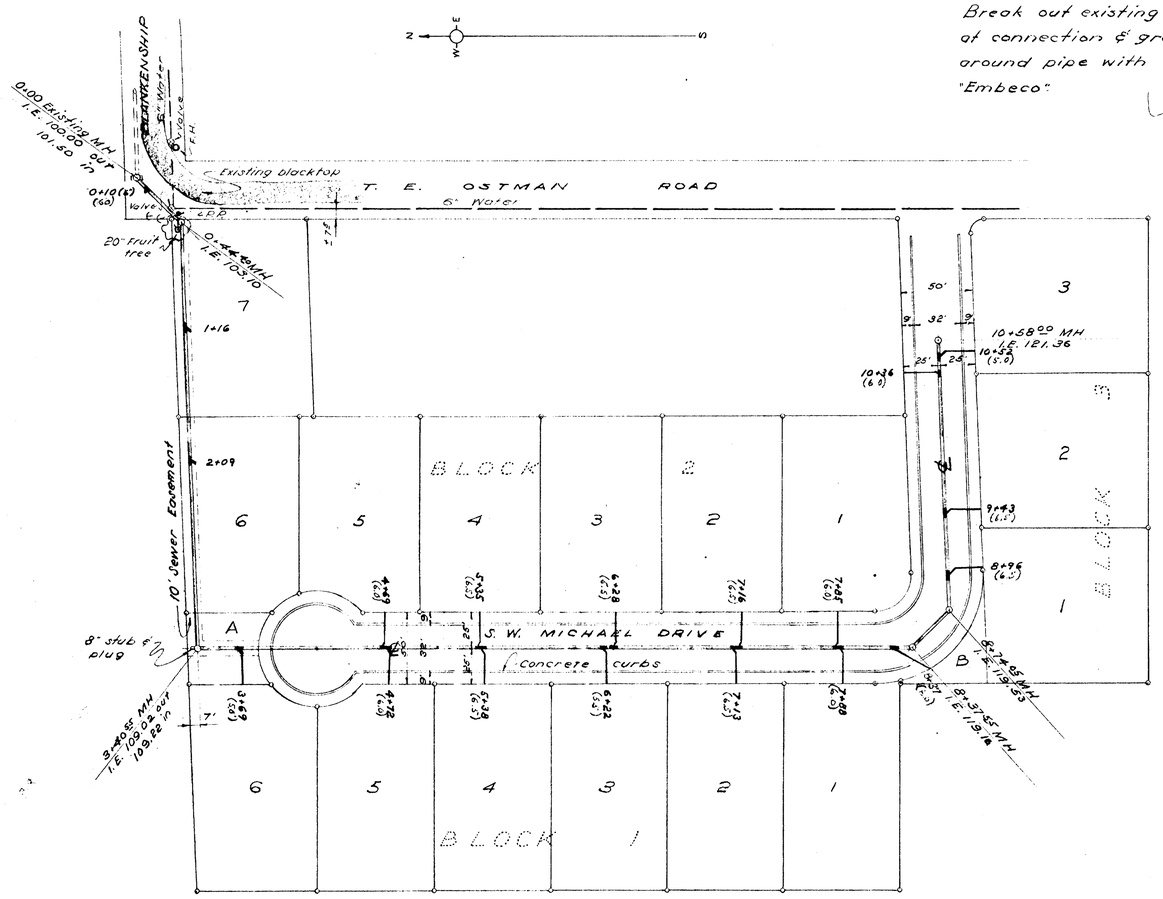

PLAN
1" = 50'

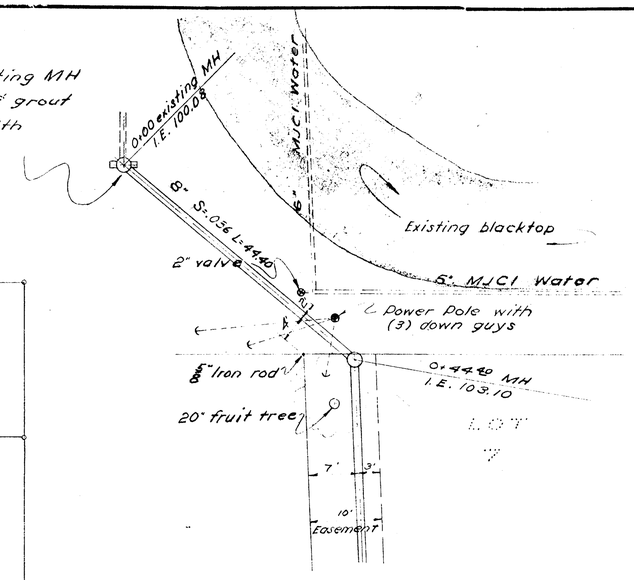

DETAIL AT NE COR LOT 7
1" = 10'

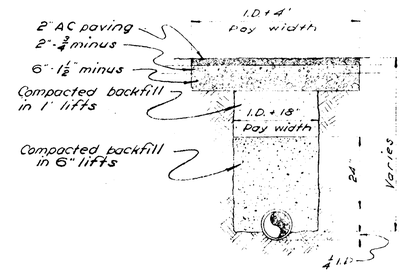

TYPICAL SECTION THRU TRENCH
NO SCALE

Standard MH ring & cover "Industrial Iron Works. Style No 1000" with one hole in the cover & the letter 'S' cast in the center of the cover.
Set MH ring in full bed of Portland Cement mortar

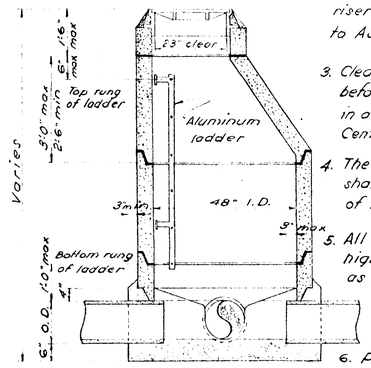

SECTION

NOTES:
1. Slope of precast eccentric cone top shall face up-grade
2. Precast concrete manhole risers & tops shall conform to ASTM specification C478.
3. Clean & wet all joints before setting risers & tops in a full bed of Portland Cement mortar.
4. The outside of all joints shall receive two coats of Inertol #7 before backfilling.
5. All manholes shall have a 12" high bottom riser to be bedded as the concrete in the base takes it's initial set.
6. Poured 3000# concrete base

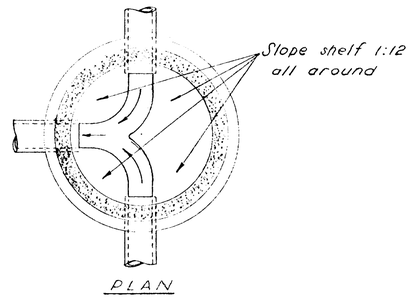

PLAN

STANDARD MANHOLE
NO SCALE

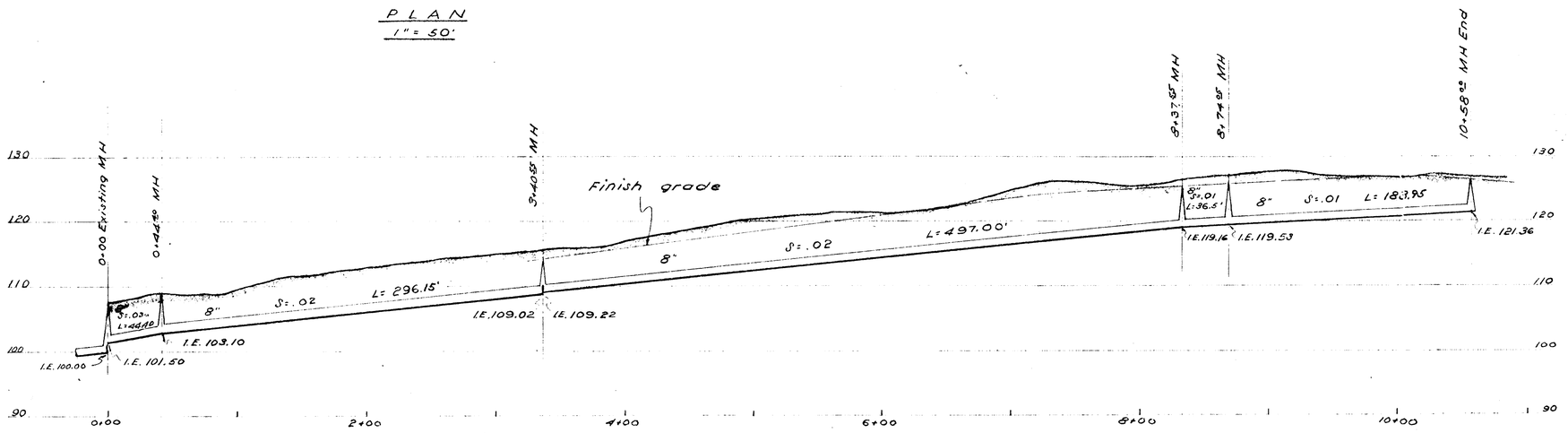

PROFILE
HORIZONTAL 1" = 50'
VERTICAL 1" = 10'

NOTES:
1. Concrete sewer pipe shall conform to ASTM specification C14 extra strength with resilient gasket closures designed specifically for the pipe furnished. Gaskets shall conform to ASTM specification C443.
2. Earth, free from stones or hard lumps, shall be placed & tamped along the length of the sewer pipe, in layers not to exceed 6", to a minimum depth of 24" over the top of the pipe. The backfill shall contain no stones larger than 12"x12"x18". No organic material shall be placed with the backfill.
3. Infiltration tests shall be conducted. Infiltration shall not exceed 4 gallons per hour per 100 ft of 8" sewer. The test section shall be filled with water to a minimum head of 6 ft over the invert.
4. House service connections shall be furnished with an 8"x4" wye of the trunk, a 4" 1/8 bend & sufficient 4" pipe to reach the property lines abutting streets, or as shown on the plan. Service connections shall be furnished with concrete, resilient gasket plugs, securely wired in place.
5. All work & materials shall conform to "City of West Lynn, Oregon, General Specifications for Sanitary Sewers."

REGISTERED PROFESSIONAL ENGINEER 4549 OREGON MAY 13, 1974 VICTOR A. BRINGLE

DATE	NO.	REVISION	BY

BRINGLE & MASON
CONSULTING ENGINEER LAND SURVEYOR
107 S.E. 2nd Ave., Hillsboro, Ore

TUALATIN VIEW ADDITION
CLACKAMAS COUNTY, ORE
SANITARY SEWER
PLAN & PROFILE

DESIGNED V.A.B.	APPROVED BY Victor A. Bringle	SHEET 1 OF 1
DRAWN Saville	SCALE AS Noted	
CHECKED V.A.B	DATE 4-10-63 FILE 69-E11-7-1	

W. LYNN ADDITION