TERESA'S VINEYARD

Subdivision Improvements

Parcels 2400, 2401, 2700, 2701 & 2800
Section 35a - T2S, R1E W.M.
City of West Linn, Clackamas County
Oregon

BENCHMARK

ELEVATIONS ARE BASED ON THE CITY OF WEST LINN BENCH MARK B . ELEV=GG7.22. LOCATED 93.5' EAST AND 17.0' SOUTH OF THE EDGE OF PAVEMENT FROM THE 5-WAY INTERSECTION OF ROSEMONT AND SANTA ANA. SAID BENCHMARK BEING A 3 CAP ON PIPE WITH YELLOW WATERWORKS LID PER FIELD TIE TO THE AS-BUILT RIM ELEVATION OF THE SANITARY SEWER AT THE INTERSECTION OF SOUTH ROAD AND COEUR D'ALENE DRIVE AS SHOWN ON THE CITY AS-BUILTS FOR VISTA RIDGE ESTATES.

COVER SHEET NOTES

1. SEE SHEET C1.1 FOR GENERAL CONSTRUCTION NOTES TYPICAL STREET SECTIONS AND LEGEND.
2. SEE SHEET C1.2 FOR SUBDIVISION CONDITIONS OF APPROVAL.
3. ALL CONSTRUCTION SHALL CONFORM TO THE CURRENT EDITION OF THE CITY OF WEST LINN STANDARD CONSTRUCTION SPECIFICATIONS. SPECIFICATIONS CAN BE FOUND AT: http://westlinnoregon.gov/publicworks/standard-construction-specifications

ATTENTION EXCAVATORS:

OREGON LAW REQUIRES YOU TO FOLLOW RULES ADOPTED BY THE OREGON UTILITY NOTIFICATION CENTER. THOSE RULES ARE SET FORTH IN OAR 952-001-0010 THROUGH OAR 952-001-0090. YOU MAY OBTAIN COPIES OF THESE RULES FROM THE CENTER BY CALLING 503-232-1987. IF YOU HAVE ANY QUESTIONS ABOUT THE RULES, YOU MAY CONTACT THE CENTER. YOU MUST NOTIFY THE CENTER AT LEAST TWO BUSINESS DAYS, BEFORE COMMENCING AN EXCAVATION. CALL 503-246-6699.

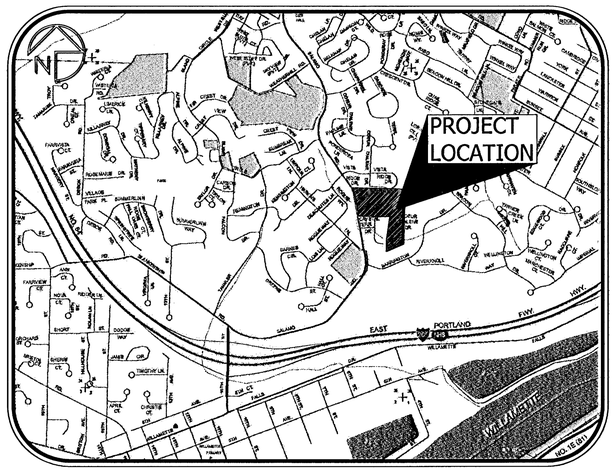

VICINITY MAP

1" = 1,000'

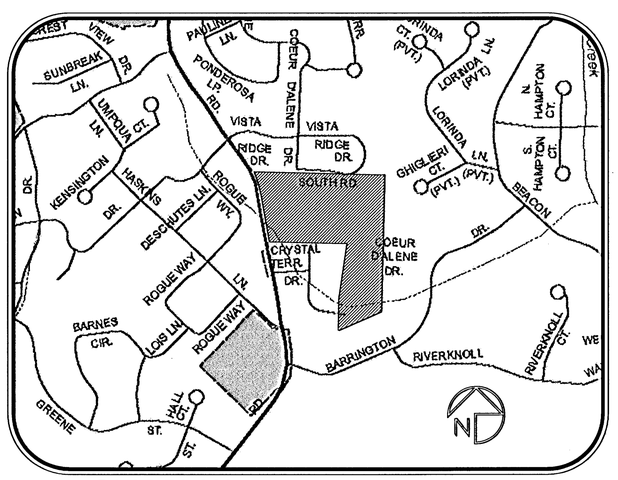

SITE PLAN

NOT TO SCALE

DEVELOPER

JTMN INVESTMENTS, LLC
2694 COEUR D'ALENE DR.
WEST LINN, OR 97068
CONTACT: JOHN WYLAND
PHONE: 503.657.3402
FAX: 503.657.3625

DESIGN/BUILD ENGINEERING / SURVEYING /CONSTRUCTION

THE SAUNDERS COMPANY, INC.
901 N. BRUTSCHER, SUITE 202
NEWBERG, OR 97140
CONTACT: CHUCK GREGORY, P.E. - ENGINEERING
CONTACT: TED LAMBERT, P.L.S./P.E. - SURVEYING
PHONE: 503.537.9347
FAX: 503.554.9107

GEOTECHNICAL ENGINEER

GEOPACIFIC ENGINEERING, INC.
13910 SW GALBREATH DR. STE 102
SHERWOOD, OR 97140
CONTACT: SCOTT HARDMAN, PE.
PHONE: 503.625.4455
FAX: 503.625.4405

LANDSCAPE ARCHITECT

simpL LLC LANDSCAPE ARCHITECTURE
122 NW THIRD AVE., SUITE 208
PORTLAND, OR 97209
CONTACT: JEFF SIMPSON
PHONE: 503.294.0012
FAX: 503.294.0013

CULVERT DESIGN ENGINEER

CONTECH CONSTRUCTION PRODUCTS
710 SW ARMCO AVE.
HILLSBORO, OR 97123
CONTACT: MATTHEW STOVALL
PHONE: 503.258.3104
FAX: 800.561.1271

STREET LIGHTING DESIGNER

NORTHSTAR ELECTRICAL CONTRACTORS
19450 GIPOLE ROAD #107
TUALATIN, OR 97062
CONTACT: KEN MURPHY
PHONE: 503.612.0840
FAX: 503.612.0841

UTILITY PROVIDERS

WATER:	CITY OF WEST LINN 503.656.6081
STORM:	CITY OF WEST LINN 503.656.6081
SEWER:	CITY OF WEST LINN 503.656.6081
POWER:	PGE, BOBBIE DANIELSON 503.742.8483
STREET LIGHTS:	PGE, LORI SWANSON 503.742.8322
GAS:	NORTHWEST NATURAL, DAVID BENTON 503.226.4211x2357
CATV:	COMCAST, BOB BOBMILLAR 360.828.3559
PHONE:	QWEST, KENNETH SCULLI 503.242.0304

THE FOLLOWING CITY OF WEST LINN STANDARD DRAWINGS SHALL BE USED IN THE PROJECT WHERE REFERENCED IN THE DRAWINGS:

200 Series - General
- WL-200 Trench Backfill Bedding and Pipe Zone
- WL-203 Street T-Cut
- WL-205A Anchor Wall
- WL-206 Standard Clean Out
- WL-207 Standard Manhole For Less Than 36" Pipe
- WI-208 Shallow Manhole For Less Than 36" Pipe
- WL-209 Oversize Manhole
- WL-210A New Manhole To Existing PVC Sewer Line Connection
- WL-211 Manhole Base
- WL-212 Flexible Manhole Connection
- WL-213 Precast Ring Extension
- WL-214 Waterproof And Tamperproof Manhole Frame And Cover
- WL-218 Service Branch
- WL-219 Tree Protection Fence

300 Series - Sanitary Sewer
- WL-300 Suburban Manhole Frame And Cover 3' Depth
- WL-302 Inside Drop Manhole Connection for Sanitary Service Private Service
- WL-303 Sewer Service Tap to Existing Sewer for House Laterals

400 Series - Water
- WL-401 Standard Fire Hydrant Assembly
- WL-402 Standard 1" Water Service
- WL-405 Standard Air Release Valve Unit
- WL406 Horizontal Thrust Blocking
- WL-409 Standard Sanitary Sewer Crossing
- WL-411 Standard Valve Box Detail
- WL-414B Backflow Prevention Devices
- WL-414C Backflow Prevention Devices

500 Series - Streets
- WL-500 Typical Utility Placement Detail
- WL-501 Typical Curbs
- WL-502 Alley, Local, And Neighborhood Road Structural Sections
- WL-503A Residential Driveway With Sidewalk Away From Curb
- WL-503B Residential Driveway With Sidewalk Adjacent to Curb
- WL-505 Curb Removal and Damage Inspection
- WL-506B Parallel Curb Ramp with Retaining Curb
- WL-507 Single Curb Ramp
- WL-508 Concrete Sidewalk Cross Section
- WL-509 Concrete Sidewalk Clearances for Curb Tight Sidewalks
- WL-510 Pedestrian Path or Bikeway
- WL-511 Curb, Gutter, Sidewalk, Doweling Detail
- WL-513A 8" Monument Box Frame and Cover

600 Series - Storm Drainage
- WL-601 Combination Curb Inlet
- WL-602B Frame And Grate For Gutter And Curb Inlet
- WL-605 Manhole Frame And Cover
- WL-607A Pollution/Flow Control Manhole
- WL-607B Cleanout/Shear Gate
- WL-614 Storm Sewer Outfall
- WL-615 Surface Water Facility Sign

RECORD DRAWINGS

Prepared By: Chuck Gregory Date: 7/31/12
Chuck Gregory, P.E.

THESE RECORD DRAWINGS HAVE BEEN PREPARED, IN PART, ON THE BASIS OF AS-BUILT INFORMATION COMPILED BY THE CONTRACTOR AND PERIODIC OBSERVATIONS DURING CONSTRUCTION. THE INFORMATION CONTAINED IN THESE DRAWINGS ARE TO THE BEST OF MY KNOWLEDGE AN ACCURATE RECORD OF THE CONSTRUCTED PUBLIC IMPROVEMENTS. IT IS RECOMMENDED THAT USERS OF THESE DRAWINGS FIELD VERIFY UTILITY SIZES, LOCATIONS AND ELEVATIONS.

SHEET INDEX

#	Title
CS	Cover Sheet
C1.1	General Notes/Typical Street Sections + Legend
C1.1a	Erosion and Sediment Control Notes
C1.1b	Erosion and Sediment Control Notes
C1.2	Final Decision Notice/Conditions of Approval
C1.3	Preliminary Plat
C1.4	Master Site Plan
C2.0	Overall Existing Conditions
C2.1	Existing Conditions Plan - Notes/Legend/Northwest Site
C2.2	Existing Conditions Plan - North Site
C2.3	Existing Conditions Plan - Northeast Site
C2.4	Existing Conditions Plan - East Central Site
C2.5	Existing Conditions Plan - Cover D'Alene Drive
C2.6	Existing Conditions Plan - Haskins Lane (West)
C2.7	Demolition Plan
C3.1	Overall Grading + Erosion Control Plan and Legend
C3.2	Grading + Erosion Control SE Detail Plan
C3.3	Grading + Erosion Control NE Detail Plan
C3.4	Grading + Erosion Control Plan NW Detail Plan
C3.5	West Retaining Wall Plan + Profile
C3.6	Arch Culvert Retaining Wall Plan + Profile
C3.7	Haskins Lane Pedestrian Path Plan + Profile
C3.8	Erosion Control Details - CWS Standard Plans and Details
C3.9	Erosion Control Details - CWS Standard Plans and Details
C3.10	Curb Ramp + Driveway Detail Plan
C4.0	Master Utility Plan
C4.1	Storm Water Detention/Quality Plan + Profile
C4.2	Storm Drainage Bypass Plan + Profile
C4.3	Storm Drainage Bypass Plan + Profile
C4.4	Coeur d'Alene Drive Street + Storm Drainage Plan + Profile
C4.5	Coeur d' Alene Drive (South) Street + Storm Drainage Plan + Profile
C4.6	Coeur d' Alene Drive (North) Street + Storm Drainage Plan + Profile
C4.7	Salamo Road + Storm Drainage Reroute Plan + Profile
C5.1	Coeur D' Alene Drive Sanitary Sewer + Water Plan + Profile
C5.2	Coeur d' Alene Drive [South] Sanitary Sewer + Water Plan + Profile
C5.3	Coeur d' Alene Drive [North] Sanitary Sewer + Water Plan + Profile
C5.4	Sanitary Sewer Extension + Connection Plan + Profile
C5.5	Tract 4 Water Line + Access Road Plan + Profile
C6.1	City of West Linn Standard Plans + Details - General
C6.2	City of West Linn Standard Plans + Details - General
C6.3	City of West Linn Standard Plans + Details - Sanitary Sewer
C6.4	City of West Linn Standard Plans + Details - Water
C6.5	City of West Linn Standard Plans + Details - Streets
C6.6	City of West Linn Standard Plans + Details - Streets
C6.7	City of West Linn Standard Plans + Details - Storm Drainage
C6.8	Miscellaneous Details
EL1.1	Street Lighting Plan
EL2.1	Street Lighting Installation Details
L1.1	Street Tree Planting Plan
L1.2	Water Quality Pond Planting Plan
L1.3	Landscape Notes and Details
L1.4	Irrigation Specifications

THE SAUNDERS COMPANY
DESIGN GROUP
901 N. Brutscher, Ste. 202
Newberg, Oregon 97132
Phone: 503-537-9347
www.thesaunderscompany.net

REGISTERED PROFESSIONAL ENGINEER 57644PE OREGON SEPT. 14, 1989 CHARLES EDWARD GREGORY
7/31/12
RENEWS: JUNE 30, 2013

J.T. SMITH companies

Teresa's Vineyard
Public Improvements
Sub-07-02/NDW-07-02/VAR-07-01
West Linn, Oregon

REV	DATE	SUMMARY
1	8/5/11	Client/Agency Comments
2	8/30/11	Agency Comments
	7/2/12	Add'l As Built
	1/27/12	As Built

Project #: 9130 Drawn: CEG

COVER SHEET

Date: April 15, 2011

CS

\\SERVER\Land Projects\9130\ENGINEERING\Construction Documents\Drawings\Permit Submittal\9130-COVER.dwg, 7/24/2012 9:33:49 AM, The Saunders Company

GENERAL CONSTRUCTION NOTES

1. WHERE NOTES OR DETAILS CONFLICT WITH ONE ANOTHER, THE CONTRACTOR SHALL ADHERE TO THE MORE STRINGENT REQUIREMENT.
2. NOTIFY ENGINEER TWO (2) BUSINESS DAYS BEFORE COMMENCING WORK.
3. LOCATION OF EXISTING UTILITIES ARE BASED UPON AVAILABLE INFORMATION. IT IS THE CONTRACTOR'S RESPONSIBILITY TO FIELD VERIFY DEPTH AND LOCATION OF EXISTING UTILITIES PRIOR TO CONSTRUCTION AND INFORM THE ENGINEER OF ANY DISCREPANCIES WITH THE PLANS. CALL FOR LOCATES AT LEAST 48 HOURS PRIOR TO COMMENCEMENT OF EXCAVATION WORK (1-800-332-2344). CONTRACTOR SHALL VERIFY DEPTH AND LOCATION OF EXISTING UTILITIES AND PONTS OF CONNECTION PRIOR TO ORDERING MANHOLES. IF DISCREPANCIES ARE FOUND, CONTRACTOR SHALL NOTIFY THE ENGINEER IMMEDIATELY.
4. THE CONTRACTOR SHALL AT ALL TIMES ABIDE BY APPLICABLE SAFETY RULES OF OSHA.
5. THE CONTRACTOR SHALL AT ALL TIMES ABIDE BY ALL APPROPRIATE CODES, LAWS AND REGULATIONS THAT GOVERN CONSTRUCTION WITHIN THE CITY OF WEST LINN RIGHT OF WAY.
6. THE CONTRACTOR SHALL NOTIFY THE SAUNDERS COMPANY SURVEY DIVISION AND SHALL NOT DISTURB ANY MONUMENTS UNTIL THEY HAVE BEEN LOCATED BY A PROFESSIONAL LICENSED SURVEYOR. IF A SURVEY MONUMENT IS TO BE DISTURBED A PRECONSTRUCTION RECORD OF SURVEY IS REQUIRED TO BE RECORDED AT THE COUNTY. THE CONTRACTOR SHALL BE RESPONSIBLE TO REPLACE ANY SURVEY MONUMENTS THAT ARE DISTURBED DUE TO CONSTRUCTION.
7. ALL CONSTRUCTION SHALL CONFORM TO THE LATEST EDITION OF THE CITY OF WEST LINN DESIGN STANDARDS AND STANDARD CONSTRUCTION SPECIFICATIONS FOR WORK WITHIN CITY RIGHTS OF WAY AND THE LATEST EDITIONS OF THE INTERNATIONAL BUILDING AND UNIFORM PLUMBING CODES WITH OREGON SPECIALTY CODE AMENDMENTS FOR WORK ON PRIVATE PROPERTY AND PRIVATE FACILITIES. ALL REFERENCES TO CITY DESIGN STANDARDS REFER TO THE CURRENT STANDARDS.
8. ALL WORK SHALL BE PERFORMED BY LICENSED CONTRACTORS.
9. THE CONTRACTOR IS RESPONSIBLE FOR MAKING ARRANGEMENTS FOR INSPECTION AND TESTING.
10. THE CONTRACTOR SHALL OBTAIN ALL NECESSARY PERMITS BEFORE CONSTRUCTION BEGINS, AS WELL AS VERIFYING THE STATUS OF EXISTING PERMITS AND RENEWING LAPSED PERMITS IF NECESSARY.
11. THE CONTRACTOR SHALL NOTIFY THE CITY INSPECTION DEPARTMENTS 24 HOURS PRIOR TO CONSTRUCTION. . CONSTRUCTION CONCEALED WITHOUT THE REQUIRED INSPECTION SHALL BE SUBJECT TO EXPOSURE AT THE CONTRACTOR'S EXPENSE. A WORK SCHEDULE WILL BE REQUIRED FROM THE CONTRACTOR SO THAT THE ENGINEER CAN HAVE AN INSPECTOR ONSITE AT THE APPROPRIATE TIMES. IF THE WORK SCHEDULE IS REVISED, THE CONTRACTOR IS TO NOTIFY THE ENGINEER OF THE CHANGES. ADDITIONALLY, THE CONTRACTOR IS TO GIVE THE ENGINEER AT LEAST 24 HOURS NOTICE OF ANY TESTING REQUIRING THE PRESENCE OF THE ENGINEER AND/OR CITY STAFF. A CITY REPRESENTATIVE AND A REPRESENTATIVE OF THE ENGINEER MUST BE PRESENT AT ALL TESTING AND THE CITY SHALL BE FURNISHED A COPY OF ALL TEST RESULTS. IF ENGINEER OR CITY DOES NOT WITNESS TESTING, CONTRACTOR WILL BE REQUIRED TO RE-TEST.
12. CONTRACTOR SHALL PROVIDE AND MAINTAIN ADEQUATE TRAFFIC CONTROL PER THE CURRENT EDITION OF THE MUTCD ALONG THE EXISTING PUBLIC ROADS AS REQUIRED BY THE CITY OF WEST LINN.
13. THE CONTRACTOR SHALL KEEP LEGIBLE AS-BUILTS THROUGHOUT CONSTRUCTION, AND NOTE ANY DEVIATION FROM THESE PLANS. AS-BUILTS, ALL TESTING RESULTS, O+M MANUALS, AND WARRANTY CARDS SHALL BE PROVIDED TO THE ENGINEER PRIOR TO REQUESTING THE PUNCHLIST WALK THROUGH.
14. THE CONTRACTOR SHALL COMPLY WITH ALL REGULATIONS SET FORTH BY OSHA, THE STATE OF OREGON, AND THE CITY OF WEST LINN REGARDING SAFETY. ANY OPEN TRENCH SHALL BE FLAGGED OFF AND PLATED IF IT IS TO REMAIN OPEN OVERNIGHT, OR IF IT IS IDLE FOR MORE THAN 2 HOURS. SHORING WILL BE REQUIRED IN ACCORDANCE WITH THE REGULATIONS SET FORTH BY OSHA. THE CONTRACTOR SHALL BE RESPONSIBLE TO NOTIFY ALL OPERATORS, LABORERS, INSPECTORS, ENGINEERS, SUBCONTRACTORS, VENDORS, DELIVERY DRIVERS, AND ANY OTHER PERSONNEL WHO MAY BE ON SITE AT ANY TIME OF ANY HAZARDOUS CONDITIONS TO LIFE, HEALTH OR PROPERTY, AND SHALL KEEP ON-SITE ADDITIONAL SAFETY CLOTHING SUCH AS HARD HATS, SAFETY VESTS, SAFETY GOGGLES AND EAR PROTECTION FOR THE USE OF SAID PERSONNEL WHILE ON-SITE.
15. CONTRACTOR SHALL REVIEW CONSTRUCTION DOCUMENTS PREPARED BY OTHERS TO COORDINATE WITH WORK TO BE COMPLETED BY OTHER CONTRACTORS.
16. THE DESIGN ENGINEER WILL BE RESPONSIBLE FOR INSPECTION OF THE PROPOSED IMPROVEMENTS WITH OVERSIGHT FROM THE CITY'S PUBLIC WORKS AND ENGINEERING STAFF.
17. THE CONTRACTOR IS TO RECEIVE THE APPROVAL OF THE ENGINEER AND THE CITY OF ANY PROPOSED CHANGES TO THE PLANS OR STANDARD REQUIREMENTS.
18. A BUILDING DEPARTMENT PLUMBING PERMIT IS REQUIRED FOR UTILITIES BEYOND THE FIRST CLEANOUT OR METER ON PRIVATE PROPERTY. A PUBLIC IMPROVEMENT GUARANTEE AGREEMENT OR A PUBLIC WORKS PERMIT, A PRE-CONSTRUCTION MEETING WITH THE CITY OF WEST LINN, AND INSTALLATION OF EROSION CONTROL MEASURES ARE REQUIRED PRIOR TO BEGINNING CONSTRUCTION.
19. PRIOR TO SITE CLEARING, 6' TALL CHAIN-LINK FENCING SHALL BE PLACED AT TREE EASEMENT BOUNDARIES PRIOR TO SITE GRADING. THE CITY ARBORIST SHALL INSPECT AND APPROVE ALL ONSITE TREE PROTECTION MEASURES PRIOR TO THE START OF SITE WORK. IT IS THE CONTRACTOR'S RESPONSIBILITY TO CONTACT THE CITY ARBORIST AND ARRANGE FOR THIS APPROVAL TO TAKE PLACE. NO PERMITS WILL BE ISSUED FROM ENGINEERING, PLANNING, OR BUILDING DEPARTMENTS WITHOUT TREE PROTECTION APPROVAL FROM THE CITY ARBORIST. ALL TREE PROTECTION MEASURES SHALL REMAIN IN PLACE AND FULLY FUNCTIONAL FOR THE ENTIRE TIME THAT SITE WORK AND CONSTRUCTION IS TAKING PLACE.
20. ALL FEES FOR STREET TREES SHALL BE PAID TO THE CITY OF WEST LINN PARKS AND RECREATION DEPARTMENT.
21. NO BUILDING PERMITS WILL BE GIVEN UNTIL THE IMPROVEMENTS HAVE BEEN ACCEPTED BY THE CITY AS SUBSTANTIALLY COMPLETE.

STREET GENERAL NOTES

1. NEW STREET SUBGRADES ARE TO BE CLEARED OF ALL SURFACE VEGETATION AND OTHER MISCELLANEOUS STRUCTURES OR MATERIALS. GRUB IMPROVEMENT AREAS TO REMOVE ALL BURIED VEGETATIVE MATTER AND DEBRIS TO A DEPTH OF 8" BELOW SUBGRADE. PROPERTY DISPOSE OF ALL WASTE MATERIAL.
2. STREET SUB GRADE WILL CONFORM TO DIVISION 501 OF THE CITY OF WEST LINN SUMMARY CONSTRUCTION SPECIFICATIONS. AREAS TO RECEIVE FILL ARE TO BE INSPECTED BY CITY OF WEST LINN PERSONNEL PRIOR TO PLACEMENT OF THE FILL. THE CONTRACTOR SHALL HAVE FILL AREAS TESTED FOR COMPACTION BY THE CERTIFIED TESTING LAB IN ACCORDANCE WITH W.L.S.C.S. DIVISION 501.03.08. SUCH TESTING WILL BE AT THE CONTRACTOR'S EXPENSE.
3. AGGREGATE BASE ROCK SHALL CONFORM TO THE REQUIREMENTS OF W.L.S.C.S. DIVISION 203. BASE COURSE SHALL BE 1 ½"-0" CRUSHED ROCK AND LEVELING COURSE SHALL BE ¾"-0". CITY OF WEST LINN REQUIRES A PROOF ROLL WITH A LOADED 10 YARD DUMP TRUCK OF THE SUB GRADE PRIOR PLACEMENT OF THE ROCK AND AGAIN AFTER PLACEMENT OF THE BASE ROCK AND PRIOR TO PAVING. ALL UNDERGROUND UTILITIES INCLUDING LATERALS, SERVICES AND POWER OR GAS CONDUITS WILL BE IN PLACE BEFORE SUBGRADE PROOF ROLL WILL TAKE PLACE.
4. ASPHALT CONCRETE SHALL CONFORM TO THE REQUIREMENTS OF W.L.S.C.S. DIVISION 505. 2" BASE LIFT SHALL BE CLASS 'B' A.C., AND 2" FINAL LIFT SHALL BE CLASS 'C' A.C. MEETING THE SPECIFICATIONS OF W.L.S.C.S. DIVISION 505. THE TOP LIFT OF ASPHALT CONCRETE SHALL NOT BE PLACED PRIOR TO RECEIVING PERMISSION FROM THE CITY OF WEST LINN ENGINEERING DEPARTMENT.
5. CONSTRUCT CURB AND GUTTER USING 3300 PSI CONCRETE MEETING THE SPECIFICATIONS OF W.L.S.C.S. DIVISION 205 (AFTER 28 DAYS) WITH MAXIMUM 1 1/2" AGGREGATE SIZE. PLACE CONTRACTION JOINTS AT 15' MAXIMUM ON CENTERS. THREE INCH WEEP HOLES ARE TO BE INSTALLED ON ALL LOTS UPHILL OR EVEN WITH THE STREET. GENERALLY WEEP HOLES SHALL BE LOCATED AT THE CENTER AND LOWEST EDGE OF CURB FOR EACH LOT. HANDICAP RAMPS SHALL BE CONSTRUCTED UNLESS OTHERWISE NOTED ON THE PLANS. CONTRACTOR SHALL STAMP LOCATION OF SEWER, STORM AND WATER CROSSINGS WITH AN (S), (ST) OR A (W). A PROOF ROLL OF THE CURB LINES IS REQUIRED PRIOR TO POURING CURBS.
6. ALL MATERIALS, INSTALLATION, TESTS AND INSPECTIONS TO BE IN STRICT ACCORDANCE WITH CITY OF WEST LINN PUBLIC WORKS STANDARD CONSTRUCTION SPECIFICATIONS.
7. A STREET CONSTRUCTION ENCROACHMENT PERMIT OR SIMILAR PERMIT MAY BE REQUIRED FROM THE CITY OF WEST LINN. CONSTRUCTION PERMIT FEES OR OTHER SIMILAR FEES OR BONDING REQUIRED OF THE CONTRACTOR WILL BE THE CONTRACTOR'S RESPONSIBILITY TO OBTAIN.
8. MONUMENT BOXES WILL BE REQUIRED AT ALL STREET CENTERLINE INTERSECTIONS, POINTS OF CURVATURE AND POINTS OF TANGENCY. BOXES SHALL CONFORM TO CLACKAMAS COUNTY SURVEYOR REQUIREMENTS.

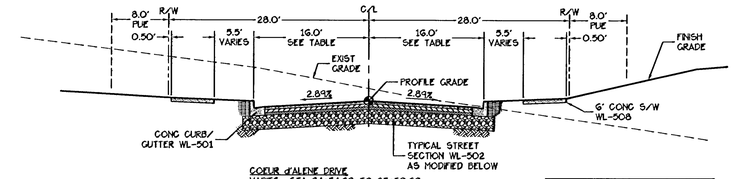

COEUR d'ALENE DRIVE
VARIES STA 24+54.63 TO 25+50.69
VARIES STA 26+99.65 TO 27+64.65
VARIES STA 32+48.24 TO 32+65.67
12' RT STA 32+65.67 TO 32+90.63
VARIES STA 32+90.63 TO 33+08.06

COEUR d'ALENE DRIVE
VARIES STA 11+59.51 TO 11+75.00 - NO S/W LEFT
VARIES STA 11+98.81 TO 12+21.60

MODIFIED TYPICAL SECTION:
3" OF CLASS C WEARING COURSE
2" OF CLASS C BASE COURSE
2" OF ¾"-0" LEVELING COURSE
TO ½" OF 1 ½"-0" BASE COURSE

(A) TYPICAL STREET 32' SECTION

Scale: 1" = 10'

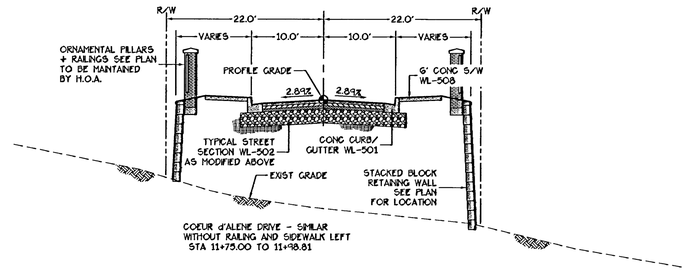

COEUR d'ALENE DRIVE - SIMILAR WITHOUT RAILING AND SIDEWALK LEFT STA 11+75.00 TO 11+98.81

(B) TYPICAL STREET 20' SECTION

Scale: 1" = 10'

UTILITY & SITE LEGEND

(See Sheet C2.1-5 for Existing Conditions Plan)

- = Curb and Gutter
- = Sidewalk
- = Retaining Wall - Boulder/Allen Block
- = Ornamental Brick Pillar + Fence
- = Chain Link Fence
- = Wood Fence
- = Combination Curb Inlet
- = Storm Drain Cleanout
- = Storm Drain Manhole
- = Storm Drain
- = Perf Pipe
- = Domestic Water
- = Water valve
- = Fire Hydrant
- = Thrust Block
- = Irrigation Double Check Valve
- = Water Meter
- = Air Release Valve
- = Sanitary Sewer Pipe
- = Sanitary Sewer Cleanout
- = Sanitary Sewer Manhole
- = Street Lights
- = Sign

GRADING LEGEND

EXISTING	PROPOSED
—101— =Existing 1 foot contours	—101— =Proposed 1 foot contours
—105— =Existing 5 foot contours	—105— =Proposed 5 foot contours

EROSION CONTROL LEGEND

- = Inlet Protection
- = Check Dam
- — X — = Erosion Control Fence
- = Gravel Construction Entrance

RECORD DRAWINGS
Prepared By: Chuck Gregory Date: 7/31/12
Chuck Gregory, P.E.
THESE RECORD DRAWINGS HAVE BEEN PREPARED, IN PART, ON THE BASIS OF AS-BUILT INFORMATION COMPILED BY THE CONTRACTOR AND PERIODIC OBSERVATIONS DURING CONSTRUCTION. THE INFORMATION CONTAINED IN THESE DRAWINGS ARE TO THE BEST OF MY KNOWLEDGE AN ACCURATE RECORD OF THE CONSTRUCTED PUBLIC IMPROVEMENTS. IT IS RECOMMENDED THAT USERS OF THESE DRAWINGS FIELD VERIFY UTILITY SIZES, LOCATIONS AND ELEVATIONS.

THE SAUNDERS COMPANY
DESIGN GROUP
901 N. Brutscher, Ste. 202
Newberg, Oregon 97132
Phone: 503-537-9347
www.thesaunderscompany.net

REGISTERED PROFESSIONAL ENGINEER 60644PE OREGON SEPT. 14, 1999 CHARLES EDWARD GREGORY
7/31/12
RENEWS: JUNE 30, 2013

J.T. SMITH companies

Teresa's Vineyard
Public Improvements
Sub-07-02/NDW-07-02/VAR-07-01
West Linn, Oregon

REV	DATE	SUMMARY
1	8/5/11	Client/Agency Comments
2	8/30/11	Agency Comments
	7/2/12	Add'l As Built
	1/27/12	As Built

Project #: 9130 Drawn: CEG

GENERAL NOTES
TYPICAL STREET
SECTIONS
& LEGEND

Date: April 15, 2011

C1.1

\\GENERAL\and Projects\9130\ENGINEERING\Construction Documents\Drawings\Permit Submittal\9130-NOTES.dwg, 7/24/2012 9:34:00 AM, The Saunders Company

EROSION CONTROL 1200-C SPECIFIC NOTES

1. HOLD A PRE-CONSTRUCTION MEETING OF PROJECT CONSTRUCTION PERSONNEL THAT INCLUDES THE INSPECTOR TO DISCUSS EROSION AND SEDIMENT CONTROL MEASURES AND CONSTRUCTION LIMITS. (SCHEDULE A.8.C.I.C3))
2. ALL PERMIT REGISTRANTS MUST IMPLEMENT THE ESCP. FAILURE TO IMPLEMENT ANY OF THE CONTROL MEASURES OR PRACTICES DESCRIBED IN THE ESCP IS A VIOLATION OF THE PERMIT. (SCHEDULE A 8.A)
3. RETAIN A COPY OF THE ESCP AND ALL REVISIONS ON SITE AND MAKE IT AVAILABLE ON REQUEST TO DEQ, AGENT, OR THE LOCAL MUNICIPALITY. DURING INACTIVE PERIODS OF GREATER THAN SEVEN (7) CONSECUTIVE CALENDAR DAYS, RETAIN THE ESCP AT THE CONSTRUCTION SITE OR AT ANOTHER LOCATION. (SCHEDULE B.2.A)
4. THE ESCP MEASURES SHOWN ON THIS PLAN ARE MINIMUM REQUIREMENTS FOR ANTICIPATED SITE CONDITIONS. DURING THE CONSTRUCTION PERIOD, UPGRADE THESE MEASURES AS NEEDED TO COMPLY WITH ALL APPLICABLE LOCAL, STATE, AND FEDERAL EROSION AND SEDIMENT CONTROL REGULATIONS. (SCHEDULE A.8.C.I.C1)C.G))
5. SUBMISSION OF ALL ESCP REVISIONS IS NOT REQUIRED. SUBMITTAL OF THE ESCP REVISIONS IS ONLY UNDER SPECIFIC CONDITIONS. (SCHEDULE A.12.C.II)
6. PHASE CLEARING AND GRADING TO THE MAXIMUM EXTENT PRACTICAL TO PREVENT EXPOSED INACTIVE AREAS FROM BECOMING A SOURCE OF EROSION. (SCHEDULE A.8.C.II.C1)C.D))
7. IDENTIFY, MARK, AND PROTECT (BY FENCING OFF OR OTHER MEANS) CRITICAL RIPARIAN AREAS AND VEGETATION INCLUDING IMPORTANT TREES AND ASSOCIATED ROOTING ZONES. AND VEGETATION AREAS TO BE PRESERVED. IDENTIFY VEGETATIVE BUFFER ZONES BETWEEN THE SITE AND SENSITIVE AREAS (E.G., WETLANDS), AND OTHER AREAS TO BE PRESERVED, ESPECIALLY IN PERIMETER AREAS. (SCHEDULE A.8.C.I.C1) + C2))
8. PRESERVE EXISTING VEGETATION AND RE-VEGETATE OPEN AREAS WHEN PRACTICABLE BEFORE AND AFTER GRADING OR CONSTRUCTION. (SCHEDULE A.7.D.II.C1))
9. EROSION AND SEDIMENT CONTROL MEASURES INCLUDING PERIMETER SEDIMENT CONTROL MUST BE IN PLACE BEFORE VEGETATION IS DISTURBED AND MUST REMAIN IN PLACE AND BE MAINTAINED, REPAIRED, AND PROMPTLY IMPLEMENTED FOLLOWING PROCEDURES ESTABLISHED FOR THE DURATION OF CONSTRUCTION, INCLUDING PROTECTION FOR ACTIVE STORM DRAIN INLETS AND CATCH BASINS AND APPROPRIATE NON-STORMWATER POLLUTION CONTROLS. (SCHEDULE A.7.D.I AND A.8.C)
10. ESTABLISH CONCRETE TRUCK AND OTHER CONCRETE EQUIPMENT WASHOUT AREAS BEFORE BEGINNING CONCRETE WORK. (SCHEDULE A.8.C.I.C6))
11. APPLY TEMPORARY AND/OR PERMANENT SOIL STABILIZATION MEASURES IMMEDIATELY ON ALL DISTURBED AREAS AS GRADING PROGRESSES AND FOR ALL ROADWAYS INCLUDING GRAVEL ROADWAYS. (SCHEDULE A.8.C.II.C2))
12. ESTABLISH MATERIAL AND WASTE STORAGE AREAS, AND OTHER NON-STORMWATER CONTROLS. (SCHEDULE A.8.C.I.C7))
13. PREVENT TRACKING OF SEDIMENT ONTO PUBLIC OR PRIVATE ROADS USING BMPS SUCH AS: GRAVELED (OR PAVED) EXITS AND PARKING AREAS, GRAVEL ALL UNPAVED ROADS LOCATED ONSITE, OR USE AN EXIT TIRE WASH. THESE BMPS MUST BE IN PLACE PRIOR TO LAND-DISTURBING ACTIVITIES. (SCHEDULE A 7.D.II.C1) AND A.8.C.II.C4))
14. WHEN TRUCKING SATURATED SOILS FROM THE SITE, EITHER USE WATER-TIGHT TRUCKS OR DRAIN LOADS ON SITE. (SCHEDULE A.7.D.II.C3))
15. USE BMPS TO PREVENT OR MINIMIZE STORMWATER EXPOSURE TO POLLUTANTS FROM SPILLS, VEHICLE AND EQUIPMENT FUELING, MAINTENANCE, AND STORAGE; OTHER CLEANING AND MAINTENANCE ACTIVITIES; AND WASTE HANDLING ACTIVITIES. THESE POLLUTANTS INCLUDE FUEL, HYDRAULIC FLUID, AND OTHER OILS FROM VEHICLES AND MACHINERY, AS WELL AS DEBRIS, LEFTOVER PAINTS, SOLVENTS, AND GLUES FROM CONSTRUCTION OPERATIONS. (SCHEDULE A.7.E.II.C2))
16. WATER OR USE A SOIL-BINDING AGENT OR OTHER DUST CONTROL TECHNIQUE AS NEEDED TO AVOID WIND-BLOWN SOIL. (SCHEDULE A 7.D.II)
17. THE APPLICATION RATE OF FERTILIZERS USED TO REESTABLISH VEGETATION MUST FOLLOW MANUFACTURER'S RECOMMENDATIONS TO MINIMIZE NUTRIENT RELEASES TO SURFACE WATERS. EXERCISE CAUTION WHEN USING TIME-RELEASE FERTILIZERS WITHIN ANY WATERWAY RIPARIAN ZONE. (SCHEDULE A.9.B.II) FERTILIZER SHALL BE 12-16-8 WITH 50% OF THE NITROGEN DERIVED FROM UREA FORMALDEHYDE, AND APPLIED AT A RATE 400 POUND PER ACRE.
18. IF A STORMWATER TREATMENT SYSTEM (FOR EXAMPLE, ELECTRO-COAGULATION, FLOCCULATION, FILTRATION, ETC.) FOR SEDIMENT OR OTHER POLLUTANT REMOVAL IS EMPLOYED, SUBMIT AN OPERATION AND MAINTENANCE PLAN (INCLUDING SYSTEM SCHEMATIC, LOCATION OF SYSTEM, LOCATION OF INLET, LOCATION OF DISCHARGE, DISCHARGE DISPERSION DEVICE DESIGN, AND A SAMPLING PLAN AND FREQUENCY) BEFORE OPERATING THE TREATMENT SYSTEM. OBTAIN PLAN APPROVAL BEFORE OPERATING THE TREATMENT SYSTEM. OPERATE AND MAINTAIN THE TREATMENT SYSTEM ACCORDING TO MANUFACTURER'S SPECIFICATIONS. (SCHEDULE A.9.D)
19. TEMPORARILY STABILIZE SOILS AT THE END OF THE SHIFT BEFORE HOLIDAYS AND WEEKENDS, IF NEEDED. THE REGISTRANT IS RESPONSIBLE FOR ENSURING THAT SOILS ARE STABLE DURING RAIN EVENTS AT ALL TIMES OF THE YEAR. (SCHEDULE A 7.B)
20. CONSTRUCTION ACTIVITIES MUST AVOID OR MINIMIZE EXCAVATION AND CREATION OF BARE GROUND DURING WET WEATHER. (SCHEDULE A.7.A.I)
21. SEDIMENT FENCE: REMOVE TRAPPED SEDIMENT BEFORE IT REACHES ONE THIRD OF THE ABOVE GROUND FENCE HEIGHT AND BEFORE FENCE REMOVAL. (SCHEDULE A.9.C.I)
22. OTHER SEDIMENT BARRIERS (SUCH AS BIOBAGS): REMOVE SEDIMENT BEFORE IT REACHES TWO INCHES DEPTH ABOVE GROUND HEIGHT, AND BEFORE BMP REMOVAL. (SCHEDULE A.9.C.II)
23. SEDIMENT BASINS AND SEDIMENT TRAPS: REMOVE TRAPPED SEDIMENTS BEFORE DESIGN CAPACITY HAS BEEN REDUCED BY FIFTY PERCENT AND AT COMPLETION OF PROJECT. (SCHEDULE A.9.C.II + IV)
24. WITHIN 24 HOURS, SIGNIFICANT SEDIMENT THAT HAS LEFT THE CONSTRUCTION SITE, MUST BE REMEDIATED. INVESTIGATE THE CAUSE OF THE SEDIMENT RELEASE AND IMPLEMENT STEPS TO PREVENT A RECURRENCE OF THE DISCHARGE WITHIN THE SAME 24 HOURS. ANY IN-STREAM CLEAN UP OF SEDIMENT SHALL BE PERFORMED ACCORDING TO THE OREGON DIVISION OF STATE LANDS REQUIRED TIMEFRAME. (SCHEDULE A.9.B.I)
25. THE INTENTIONAL WASHING OF SEDIMENT INTO STORM SEWERS OR DRAINAGE WAYS MUST NOT OCCUR. VACUUMING OR DRY SWEEPING AND MATERIAL PICKUP MUST BE USED TO CLEANUP RELEASED SEDIMENTS. (SCHEDULE A.9.B.I)
26. THE ENTIRE SITE MUST BE TEMPORARILY STABILIZED USING VEGETATION OR A HEAVY MULCH LAYER, TEMPORARY SEEDING, OR OTHER METHOD SHOULD ALL CONSTRUCTION ACTIVITIES CEASE FOR 30 DAYS OR MORE. (SCHEDULE A.7.F.I)
27. PROVIDE TEMPORARY STABILIZATION FOR THAT PORTION OF THE SITE WHERE CONSTRUCTION ACTIVITIES CEASE FOR 14 DAYS OR MORE WITH A COVERING OF BLOWN STRAW AND A TACKIFIER, LOOSE STRAW, OR AN ADEQUATE COVERING OF COMPOST MULCH UNTIL WORK RESUMES ON THAT PORTION OF THE SITE. (SCHEDULE A.7.F.II)
28. THE DESIGNATED EROSION AND SEDIMENT CONTROL INSPECTOR MUST PERFORM DAILY INSPECTIONS OF THE BMPS AND DISCHARGE OUTFALLS WHEN RAINFALL AND RUNOFF OCCUR. RECORD THE INSPECTIONS AND OBSERVATIONS IN A LOG THAT IS ON SITE. (SCHEDULE B.1.B.C1))
29. ALL ESCP CONTROLS AND PRACTICES MUST BE INSPECTED VISUALLY ONCE A WEEK TO ENSURE THAT BMPS ARE IN WORKING ORDER PRIOR TO THE SITE BECOMING INACTIVE OR IN ANTICIPATION OF SITE INACCESSIBILITY AND MUST BE INSPECTED VISUALLY ONCE EVERY TWO (2) WEEKS DURING INACTIVE PERIODS GREATER THAN SEVEN (7) CONSECUTIVE CALENDAR DAYS. (SCHEDULE B.1.B.C2) + C3))
30. IF PRACTICAL, INSPECTIONS MUST OCCUR DAILY AT A RELEVANT AND ACCESSIBLE DISCHARGE POINT OR DOWNSTREAM LOCATION DURING PERIODS IN WHICH THE SITE IS INACCESSIBLE DUE TO INCLEMENT WEATHER. (SCHEDULE B.1.B.C4))
31. DO NOT REMOVE TEMPORARY SEDIMENT CONTROL PRACTICES UNTIL PERMANENT VEGETATION OR OTHER COVER OF EXPOSED AREAS IS ESTABLISHED. IDENTIFY THE TYPE OF VEGETATIVE SEED MIX USED. (SCHEDULE A 7.B.II)
32. PROVIDE PERMANENT EROSION CONTROL MEASURES ON ALL EXPOSED AREAS. REMOVE ALL TEMPORARY EROSION CONTROL MEASURES AS EXPOSED AREAS BECOME STABILIZED, UNLESS DOING SO CONFLICTS WITH LOCAL REQUIREMENTS. PROPERLY DISPOSE OF CONSTRUCTION MATERIALS AND WASTE, INCLUDING SEDIMENT RETAINED BY TEMPORARY BMPS. (SCHEDULE A.8.C.II)
33. RECOMMENDED SEED MIXTURE: 80% PR 5520 DWARF PERENNIAL RYEGRASS AND 20% CREEPING RED FESCUE, BY WEIGHT. APPLICATION RATE SHALL BE 100 POUNDS MINIMUM PER ACRE. SEED AND MULCH AT A RATE OF 2000 LBS/AC WITH HEAVY BONDING AGENT OR NAILING AND ANCHORS. MULCH SHALL BE A WOOD CELLULOSE FIBER OR OTHER MATERIAL SOLUBLE FOR HYDRO MULCHING. TEMPORARY OR PERMANENT HYDRO SEEDING OR ACCEPTABLE SEEDING AND MULCHING MUST BE PROVIDED WHENEVER PERENNIAL COVER CANNOT BE ESTABLISHED ON SITES WHICH WILL BE EXPOSED FOR 60 DAYS OR MORE.

GENERAL EROSION CONTROL SEED MIX

THE FOLLOWING GRASS SEED MIX SHALL BE USED ON ALL DISTURBED AREAS:

-ELKA PERENNIAL RYEGRASS	50%
-ESSENCE PERENNIAL RYEGRASS	20%
-CINDY CREEPING RED FESCUE	20%
-COBRA CREEPING BENTGRASS	10%

SEEDING RATE: MINIMUM OF 5 LBS/1000 SQ. FT.

STANDARD NOTES FOR SEDIMENT FENCES

1. THE FILTER FABRIC SHALL BE PURCHASED IN A CONTINUOUS ROLL CUT TO THE LENGTH OF THE BARRIER TO AVOID USE OF JOINTS. WHEN JOINTS ARE NECESSARY, FILTER CLOTH SHALL BE SPLICED TOGETHER ONLY AT A SUPPORT POST, WITH A MINIMUM 6-INCH OVERLAP, AND BOTH ENDS SECURELY FASTENED TO THE POST, OR OVERLAP 2'X2' POSTS AND ATTACH AS SHOWN ON DETAIL.
2. SEDIMENT FENCES SHOULD BE INSTALLED A MINIMUM OF 3 FEET FROM TOE OF SLOPE IN ORDER TO MAXIMIZE STORAGE.
3. THE FILTER FABRIC FENCE SHALL BE INSTALLED TO FOLLOW THE CONTOURS. THE FENCE POSTS SHALL BE SPACED A MAXIMUM OF 6 FEET APART AND DRIVEN SECURELY INTO THE GROUND A MINIMUM OF 12 INCHES.
4. THE FILTER FABRIC SHALL HAVE A MINIMUM VERTICAL BURIAL OF 6 INCHES. ALL EXCAVATED MATERIAL FROM FILTER FABRIC FENCE INSTALLATION SHALL BE BACKFILLED AND COMPACTED ALONG THE ENTIRE DISTURBED AREA.
5. WHEN SEDIMENT FENCE APPROACHES IT'S TERMINATION POINT, TURN FENCE UPHILL AND EXTEND ONE FULL PANEL (6 FT).
6. WHEN JOINING TWO OR MORE SEDIMENT FENCES TOGETHER, JOIN THE TWO END STAKES BY WRAPPING THE TWO ENDS AT LEAST ONE AND ONE HALF TURNS AND DRIVING THE JOINED STAKES INTO THE GROUND TOGETHER.
7. HEIGHT OF A SEDIMENT FENCE SHOULD NOT EXCEED 3 FEET. STORAGE HEIGHT AND PONDING HEIGHT SHOULD NEVER EXCEED 1.5 FEET
8. STANDARD HEAVY DUTY FILTER FABRIC FENCE SHALL HAVE MANUFACTURED STITCHED LOOPS FOR 2'X2' POST INSTALLATION. STITCHED LOOPS SHALL BE INSTALLED ON THE UP HILL SIDE OF THE LOOPED AREA.
9. FILTER FABRIC FENCE SHALL BE REMOVED WHEN THEY HAVE SERVED THEIR USEFUL PURPOSE, BUT NOT BEFORE THE UPSLOPE AREA HAS BEEN PERMANENTLY PROTECTED AND STABILIZED.
10. FILTER FABRIC FENCES SHALL BE INSPECTED BY APPLICANT/CONTRACTOR IMMEDIATELY AFTER EACH RAINFALL AND AT LEAST DAILY DURING PROLONGED RAINFALL. ANY REQUIRED REPAIRS SHALL BE MADE IMMEDIATELY.

BIOBAG CONSTRUCTION, INSPECTION & MAINTENANCE NOTES

1. BIO-FILTER BAGS SHOULD BE CLEAN 100 PERCENT RECYCLED WOOD PRODUCT WASTE. STANDARD SIZE 10X8X30 INCHES. WEIGHT APPROXIMATELY 45 POUNDS. WITH ½ INCH PLASTIC NETTING.
2. MAY BE LEFT IN PLACE OR USED AS MULCH ONCE THEY HAVE SERVED THEIR PURPOSE.
3. SURFACE AREA SHOULD BE SMOOTH.
4. USE (2) 1X2 INCH STAKES PER BAG. DRIVEN 12 INCHES INTO GROUND.
5. ENDS OF BAGS MUST BE OVERLAPPED 6 INCHES TO PREVENT PIPING BETWEEN JOINTS.

INSPECTION + MAINTENANCE

1. REQUIRES ROUTINE INSPECTION.
2. CHECK THAT STAKES ARE SECURE AND ENDS OF BAGS ARE TIGHTLY OVERLAPPED. CHECK THAT UNDERCUTTING OR END-FLOW IS NOT OCCURRING.
3. INSPECT PLASTIC MESH BAGS FOR TEARS.
4. REMOVE SEDIMENT WHEN 1/3 HEIGHT OF BAG HAS ACCUMULATED.
5. REPLACE DAMAGED BAGS AS NEEDED.

INLET PROTECTION CONSTRUCTION, INSPECTION & MAINTENANCE NOTES

1. BIO-FILTER BAGS SHOULD BE CLEAN 100 PERCENT RECYCLED WOOD PRODUCT WASTE. STANDARD SIZE 10X8X30 INCHES. WEIGHT APPROXIMATELY 45 POUNDS. WITH ½ INCH PLASTIC NETTING.
2. PLACE INLET PROTECTION IN AREAS WHERE WATER CAN POND, AND WHERE PONDING WILL NOT HAVE ADVERSE IMPACTS.
3. INLET PROTECTION MUST ALLOW FOR OVERFLOW IN A SEVERE STORM EVENT.
4. ADDITION MEASURES MUST BE CONSIDERED DEPENDING UPON SOIL TYP.

INSPECTION + MAINTENANCE

1. INSPECT ONCE PER WEEK ON ACTIVE SITES, ONCE EVERY TWO WEEKS ON IN-ACTIVE SITES, AND WITHIN 24 HOURS FOLLOWING A .5 INCH RAIN EVENT.
2. CLEAN INLET PROTECTION DURING AND AFTER EACH SIGNIFICANT STORM AND REMOVE SEDIMENT FROM BEHIND STRUCTURE AFTER EVERY STORM.
3. IF THE FILTER FABRIC BECOMES CLOGGED WITH SEDIMENT, IT MUST BE CAREFULLY REMOVED FROM THE INLET AND EITHER CLEANED OR REPLACED.
4. ASSESS THE IMPACTS OF ALLOWING WATER TO POND AT THE INLET AND PROVIDE AN OVERFLOW WEIR OR SOME OTHER TYPE OF RELIEF AS NEEDED.
5. CONSIDER THE EFFECT OF PLACING OBSTRUCTIONS AT INLETS ON GRADE MAY HAVE ON THEIR EFFICIENCY.
6. USE MECHANICAL MEANS TO REMOVE SEDIMENT DEPOSITS (SHOVEL, BROOM, SWEEPER/VACTOR UNIT.
7. REMOVE SEDIMENT ACCUMULATED ON OR AROUND THE PROTECTION AS NEEDED TO MAINTAIN INTENDED FUNCTIONS.
8. REPAIR OR REPLACE MATERIALS AS NEEDED TO ENSURE PROPER FUNCTIONING.

CONSTRUCTION ENTRANCE GENERAL NOTES

1. INSTALL CONSTRUCTION ENTRANCE PRIOR TO ANY SITE WORK, WHENEVER POSSIBLE. CONSTRUCT THE PAD ON A FIRM, COMPACTED SUBGRADE.
2. INSTALL GEOTEXTILE UNDER ROCK WHEN SUBGRADE IS NOT STABLE OR IS "PUMPING" UP INTO THE PAD.
3. MINIMUM LENGTH, WIDTH, DEPTH AS SHOWN ON THE DRAWINGS.
4. MINIMUM ROCK SIZE TO BE 3"-6" CLEAN PIT RUN.
5. DO NOT INSTALL ROCK ON PAVED SURFACES. (USE WOOD CURB RAMPS.) WOOD CURB RAMPS SHOULD BE MADE OUT OF 2X6 MATERIAL, NAILED TOGETHER. INCLUDE A TIRE WASH FACILITY IF THE ENTRANCE DOES NOT PROVE EFFECTIVE IN RETAINING SEDIMENT ONSITE.
6. REQUIRES ONGOING INSPECTION.
7. IMMEDIATELY SWEEP UP AND REMOVE OR STABLIZE ONSITE ANY SEDIMENT THAT IS TRACKED ONTO PAVEMENT.
8. IF THE SEDIMENT POSES A THREAT TO PUBLIC SAFETY AND STREET SWEEPING PROVES INEFFECTIVE, CONSIDER WASHING THE STREET AND COLLECTING THE WATER IN A SEDIMENT POND OR SUMP BEFORE IT LEAVES THE SITE.
9. ADD OR REPLACE ROCK AS NEEDED TO MAINTAIN THE SPECIFIED DIMENSIONS. IMMEDIATELY REMOVE ANY ROCK, WHICH GETS CARRIED FROM THE PAD TO THE ROADWAY.

GENERAL EROSION CONTROL SEQUENCING

1. INSTALL STABILIZED CONSTRUCTION ENTRANCES
2. INSTALL PERIMETER SEDIMENT CONTROL FENCE
3. INSTALL SENSITIVE AREAS CONSTRUCTION FENCING
4. INSTALL TREE PROTECTION FENCING
5. INSTALL INLET PROTECTION AROUND EXISTING CATCH BASINS
6. CLEARING AND GRUBBING
7. MASS EXCAVATION AND EMBANKMENT
8. HYDROSEED ALL EXPOSED AREAS THAT WILL NOT BE FURTHER DISTURBED.
9. EXCAVATE CONCRETE CHUTE WASH OUT PIT
10. INSTALL WATER/SEWER/STORM DRAINAGE UTILITIES
12. INSTALL FRANCHISE UTILITIES AND LIGHT POLES AND STRAW MULCH ALL DISTURBED AREAS
13. CONSTRUCT STREET BASE ROCK, CURBS AND PAVING
14. INSTALL FINAL IRRIGATION (IF REQUIRED), LANDSCAPING AND SITE STABLIZATION
15. INSTALL SLOPE STABLIZATION MATTING IF HYDROSEEDING HAS NOT BEEN ESTABLISED BY OCT. 1ST.

GRADING/EROSION CONTROL GENERAL NOTES

1. SEE THE 1200-C EROSION CONTROL PERMIT FOR ADDITIONAL EROSION CONTROL REQUIREMENTS. BESIDES THE STRUCTURAL FILL THAT WILL BE REQUIRED FOR CONSTRUCTION OF STREET IMPROVEMENTS, A STRUCTURAL FILL IS ALSO TO BE BUILT ON LOTS WHERE NOTED ON THE PLANS TO THE SPECIFICATIONS NOTED BELOW, UNLESS MODIFIED BY THE GEOTECHNICAL ENGINEER.
2. ALL GRADING SHALL BE DONE UNDER THE SUPERVISION OF A REGISTERED SOILS ENGINEER, WHO SHALL CERTIFY THAT ALL FILL HAS BEEN PROPERLY PLACED, AND WHO SHALL SUBMIT A FINAL COMPACTION REPORT FOR ALL FILLS OVER 1 FOOT DEEP. EXCAVATING, GRADING + COMPACTION SHALL COMPLY WITH THE INTERNATIONAL BUILDING CODE, THE PROJECT SPECIFICATIONS AND THE PROJECT GEOTECHNICAL ENGINEER'S RECOMMENDATIONS CONTAINED WITHIN THE SOILS REPORT. INSPECTIONS BY THE GEOTECHNICAL ENGINEER WILL BE REQUIRED AFTER STRIPPING OF TOPSOIL AND PRIOR TO FILL PLACEMENT, AFTER EACH LIFT COMPLETED AND AFTER ALL FILL IS COMPLETED. CONTRACTOR IS RESPONSIBLE FOR COORDINATING INSPECTIONS BY THE GEOTECHNICAL ENGINEER.
3. ALL GROUND EXPOSED DURING GRADING SHALL BE PLANTED WITH GRASS OR GROUND COVER TO PROTECT THE SLOPE FROM EROSION AND INSTABILITY PRIOR TO THE APPROVAL OF FINAL INSPECTION.
4. NO FILL SHALL BE PLACED ON EXISTING GROUND UNTIL THE GROUND HAS BEEN CLEARED OF WEEDS, DEBRIS, TOPSOIL, AND OTHER DELETERIOUS MATERIAL AND CERTIFIED BY A REGISTERED SOILS ENGINEER.
5. IF STEEP SLOPING TERRAIN OCCURS UPON WHICH FILL IS TO BE PLACED, IT MUST BE CLEARED, KEYED, AND BENCHED INTO FIRM NATURAL SOIL FOR FULL SUPPORT. PREPARATION SHALL BE APPROVED BY A REGISTERED SOILS ENGINEER PRIOR TO PLACEMENT OF FILL MATERIAL.
6. DURING ROUGH GRADING OPERATIONS AND PRIOR TO CONSTRUCTION OF PERMANENT DRAINAGE STRUCTURES, TEMPORARY DRAINAGE CONTROL SHALL BE PROVIDED TO PREVENT PONDING WATER, CONTROL RUNOFF CONTAMINATION AND DAMAGE TO ADJACENT PROPERTY.
7. DUST SHALL BE CONTROLLED BY WATERING OR OTHER APPROVED METHODS.
8. ALL EXISTING DRAINAGE COURSES ON THE PROJECT SITE MUST CONTINUE TO FUNCTION ESPECIALLY DURING STORM CONDITIONS. PROTECTIVE MEASURES AND TEMPORARY DRAINAGE PROVISIONS MUST BE USED TO PROTECT ADJOINING PROPERTIES DURING GRADING OPERATIONS.
9. STABILITY CALCULATIONS WITH A SAFETY FACTOR OF AT LEAST 1.5 SHALL BE SUBMITTED BY A REGISTERED SOILS ENGINEER TO THE CITY OR COUNTY FOR CUT AND FILL SLOPES OVER 30 FEET IN VERTICAL HEIGHT.
10. ALL MATERIAL IMPORTED OR EXCAVATED ON THE PROJECT SITE TO BE UTILIZED IN THE FILL SHALL BE ASSESSED FOR SUITABILITY BY A REGISTERED SOILS ENGINEER.
11. MATERIAL USED IN THE COMPACTING PROCESS SHOULD BE EVENLY SPREAD, WATERED OR DRIED, PROCESSED AND COMPACTED IN THIN LIFTS NOT TO EXCEED SIX INCHES IN THICKNESS TO OBTAIN A UNIFORM DENSE LAYER. THE FILL SHOULD BE PLACED AND COMPACTED ON A HORIZONTAL PLANE, UNLESS OTHERWISE APPROVED BY THE ENGINEER. FILL MATERIAL SHOULD BE PLACED IN HORIZONTAL LIFTS APPROXIMATELY EIGHT (8) INCHES THICK (LOOSE) AND COMPACTED TO AT LEAST 95% OF THE MAXIMUM DRY DENSITY, AS DETERMINED PER 501.03.04 CONSTRUCTION STANDARDS, UNLESS MODIFIED BY THE GEOTECHNICAL ENGINEER. MOISTURE CONTENT OF THE STRUCTURAL FILL SHALL BE CONTROLLED TO WITHIN 2% OF THE OPTIMUM MOISTURE CONTENT AT THE TIME OF COMPACTION.
12. AN APPROVED GRADING AND EROSION CONTROL PLAN SHALL BE ON THE JOB SITE AT ALL TIMES. DEVIATIONS FROM THE PLAN MUST BE PRECEDED BY AN APPROVED PLAN REVISION.
13. GRADING AND DRAINAGE PLAN APPROVAL INCLUDES THE CONSTRUCTION OF ALL SURFACE IMPROVEMENTS SHOWN ON THE APPROVED PLAN, INCLUDING, BUT NOT LIMITED TO RETENTION AREAS, SEDIMENTATION BASINS AND/OR OTHER DRAINAGE FACILITIES, DRAINAGE PATTERNS, WALLS, CURBS, ASPHALT PAVEMENT, SIDEWALKS ETC.
14. SEPARATE PERMIT/APPROVAL IS REQUIRED FOR RETAINING WALL CONSTRUCTION OVER 4 FEET IN HEIGHT FROM BOTTOM OF FOOTING TO TOP OF WALL OR FOR WALLS WITH SLOPING BACKFILLS.
15. ALL DRAINAGE PROTECTIVE DEVICES SUCH AS SWALES, INTERCEPTOR DITCHES, PIPES, PROTECTIVE BERMS, CONCRETE CHANNELS OR OTHER MEASURES DESIGNED TO PROTECT ADJACENT BUILDINGS OR PROPERTY FROM STORM RUNOFF MUST BE COMPLETED PRIOR TO BUILDING CONSTRUCTION.
16. THE CONTRACTOR SHALL PROVIDE ADEQUATE MEANS FOR CLEANING TRUCKS AND/OR OTHER EQUIPMENT OF MUD PRIOR TO ENTERING PUBLIC STREETS, AND IT IS THE CONTRACTOR'S RESPONSIBILITY TO CLEAN STREETS AND TAKE WHATEVER MEASURES ARE NECESSARY TO BE SURE THAT ALL ROADS ARE MAINTAINED IN A CLEAN (MUD AND DUST FREE) CONDITION AT ALL TIMES.
17. INSTALL TREE PROTECTION FENCING AND EROSION PRIOR TO COMMENCEMENT OF SITE DISTURBANCE.
18. OWNER OR DESIGNATED PERSON SHALL BE RESPONSIBLE FOR PROPER INSTALLATION AND MAINTENANCE OF ALL EROSION AND SEDIMENT CONTROL MEASURES, IN ACCORDANCE WITH LOCAL, STATE, AND FEDERAL REGULATIONS.
19. PRIOR TO ANY LAND DISTURBING ACTIVITIES, THE BOUNDARIES OF THE CLEARING LIMITS, VEGETATED BUFFERS, AND ANY SENSITIVE AREAS SHOWN ON THIS PLAN SHALL BE CLEARLY DELINEATED IN THE FIELD. DURING THE CONSTRUCTION PERIOD NO DISTURBANCE IS PERMITTED BEYOND THE CLEARING LIMITS. THE OWNER/PERMITTEE MUST MAINTAIN THE DELINEATION FOR THE DURATION OF THE PROJECT. NOTE: VEGETATED CORRIDORS TO BE DELINEATED WITH ORANGE CONSTRUCTION FENCE OR APPROVED EQUAL.
20. PRIOR TO ANY LAND DISTURBING ACTIVITIES, THE BMP'S THAT MUST BE INSTALLED ARE A GRAVEL CONSTRUCTION ENTRANCE, PERIMETER SEDIMENT CONTROL, AND INLET PROTECTION. THESE BMP'S MUST BE MAINTAINED FOR THE DURATION OF THE PROJECT.
21. IF VEGETATIVE SEED MIXES ARE SPECIFIED, SEEDING MUST TAKE PLACE NO LATER THAN SEPTEMBER 1ST THE TYPE AND PERCENTAGES OF SEED IN THE MIX ARE IDENTIFIED ON THE PLANS.
22. ALL PUMPING OF SEDIMENT LADEN WATER SHALL BE DISCHARGED OVER AN UNDISTURBED, PREFERABLY VEGETATED AREA, AND THROUGH A SEDIMENT CONTROL BMP i.e. (FILTER BAG).
23. THE ESC PLAN MUST BE KEPT ON SITE. ALL MEASURES SHOWN ON THE PLAN MUST BE INSTALLED PROPERLY TO ENSURE THAT SEDIMENT OR SEDIMENT LADEN WATER DOES NOT ENTER A SURFACE WATER SYSTEM, ROADWAY, OR OTHER PROPERTIES.
24. THE ESC MEASURES SHOWN ON THIS PLAN ARE MINIMUM REQUIREMENTS FOR ANTICIPATED SITE CONDITIONS. DURING THE CONSTRUCTION PERIOD, THESE MEASURES SHALL BE UPGRADED AS NEEDED TO COMPLY WITH ALL APPLICABLE LOCAL, STATE, AND FEDERAL EROSION CONTROL REGULATIONS. CHANGES TO THE APPROVED ESC PLAN MUST BE SUBMITTED IN THE FORM OF AN ACTION PLAN TO DEQ PER THE 1200 C PERMIT.
25. IN AREAS SUBJECT TO WIND EROSION, APPROPRIATE BMP'S MUST BE USED WHICH MAY INCLUDE THE APPLICATION OF WATER SPRAYING, PLASTIC SHEETING, MULCHING, OR OTHER APPROVED MEASURES.
26. ALL EXPOSED SOILS MUST BE COVERED DURING THE WET WEATHER PERIOD (OCT. 1ST - MAY 31ST).
27. ALL AREAS DISTURBED DURING CONSTRUCTION TO BE GRADED TO DRAIN AND COMPACTED TO A MINIMUM OF 90% OF ASSHTO T-99 IMMEDIATELY AFTER INSTALLATION OF UTILITIES OR GRADING.

RECORD DRAWINGS
Prepared By: Chuck Gregory Date: 7/24/12
Chuck Gregory, PE
THESE RECORD DRAWINGS HAVE BEEN PREPARED, IN PART, ON THE BASIS OF AS-BUILT INFORMATION COMPILED BY THE CONTRACTOR AND PERIODIC OBSERVATIONS DURING CONSTRUCTION. THE INFORMATION CONTAINED IN THESE DRAWINGS ARE TO THE BEST OF MY KNOWLEDGE AN ACCURATE RECORD OF THE CONSTRUCTED PUBLIC IMPROVEMENTS. IT IS RECOMMENDED THAT USERS OF THESE DRAWINGS FIELD VERIFY UTILITY SIZES, LOCATIONS AND ELEVATIONS.

THE SAUNDERS COMPANY
DESIGN GROUP
901 N. Brutscher, Ste. 202
Newberg, Oregon 97132
Phone: 503-537-9347
www.thesaunderscompany.net

7/31/12
REGISTERED PROFESSIONAL ENGINEER 90644PE OREGON SEPT. 14, 1999 CHARLES EDWARD GREGORY
RENEWS: JUNE 30, 2013

J.T. SMITH companies

Teresa's Vineyard
Public Improvements
Sub-07-02/NDW-07-02/VAR-07-01
West Linn, Oregon

REV	DATE	SUMMARY
1	8/5/11	Client/Agency Comments
	7/2/12	Add'l As Built
	1/27/12	As Built

Project #: 9130 Drawn: CEG

EROSION AND SEDIMENT CONTROL NOTES

Date: April 15, 2011

C 1.1a

\\SERVER\Land Projects\9130\ENGINEERING\Construction Documents\Drawings\Permit Submittal\9130-CE-NOTES.dwg, 7/24/2012 9:34:09 AM, The Saunders Company

STORM DRAINAGE GENERAL NOTES

1. THE CONTRACTOR SHALL VIDEO INSPECT AND MANDREL ALL CONVEYANCE LINES WHERE POSSIBLE AND AT THE DIRECTION OF THE ENGINEER. PROVIDE VIDEOS AND REPORTS TO THE ENGINEER A MINIMUM OF 30 DAYS PRIOR TO PLACEMENT OF TOP LIFT OF PAVEMENT OR OTHER FINISHED SURFACES OTHER THAN LANDSCAPING. STORM DRAINS SHALL BE TESTED FOR DEFLECTION IN ACCORDANCE WITH DIVISION 601.03.11 AND VIDEO INSPECTED IN ACCORDANCE WITH DIVISION 601.03.12 OF THE WEST LINN STANDARD CONSTRUCTION SPECIFICATIONS. ALL TESTS SHALL BE WITNESSED BY THE ENGINEER AND A REPRESENTATIVE OF THE CITY
2. ALL REQUESTS FOR ALTERNATIVE MATERIALS SHALL BE SUBMITTED TO THE ENGINEER AND THE CITY OF WEST LINN IN WRITING. THE ENGINEER MAY REQUIRE A MINIMUM OF 5 WORKING DAYS TO REVIEW AND COMMENT ON ALL SUCH REQUESTS.
3. IT SHALL BE THE RESPONSIBILITY OF THE CONTRACTOR TO VERIFY ALL EXISTING UTILITIES PRIOR TO CONSTRUCTION AND SHALL NOTIFY ENGINEER IMMEDIATELY OF ANY CONFLICTS WITH THESE PLANS IMMEDIATELY UPON DISCOVERY.
4. THE CONTRACTOR SHALL BE HELD RESPONSIBLE FOR INSTALLING AND MAINTAINING ALL EROSION CONTROL MEASURES TO PREVENT SEDIMENT LADEN WATER FROM LEAVING THE SITE. ALL ADJACENT DOWNSTREAM STORM DRAIN INLETS SHALL BE PROTECTED FROM SILTATION BY INSTALLING AND MAINTAINING SILT SACKS IN EACH INLET. FAILURE TO COMPLY WITH ALL APPLICABLE EROSION CONTROL LAWS AND REQUIREMENTS MAY SUBJECT THE CONTRACTOR TO ANY ASSOCIATED FINES, OR DAMAGES, INCLUDING THOSE THAT MAY BE LEVIED THROUGH THE OWNER/DEVELOPER.
5. THE CONTRACTOR SHALL NOT ALLOW ANY WASHWATER OR DEBRIS TO ENTER NEW PIPES OR CHANNELS DURING CONSTRUCTION.
6. ALL PIPE BEDDING AND BACKFILL SHALL CONFORM TO THE CITY OF WEST LINN STANDARDS FOR WORK INSIDE THE CITY RIGHT OF WAY AND TO THE PROJECT TECHNICAL SPECIFICATIONS, U.P.C. STANDARDS AND THE RECOMMENDATIONS OF THE GEOTECHNICAL REPORT FOR WORK ON PRIVATE PROPERTY. GRANULAR BACKFILL (3/4 -0) IS TO BE COMPACTED TO 95% MAXIMUM DRY DENSITY PER AASHTO T-180 TEST METHOD AND NATIVE MATERIAL SHALL BE COMPACTED TO 95% OF IN-PLACE DRY DENSITY OF SURROUNDING SOIL.
7. ALL MANHOLE AND CLEANOUT RIMS ARE APPROXIMATE, AND SHALL BE INSTALLED TO THE FINAL PAVEMENT GRADE. ALL ATTEMPTS SHALL BE MADE TO PREVENT PONDING OF WATER ON THE PAVEMENT. THE CONTRACTOR SHALL WASH THE ENTIRE PAVING AREAS AND REPAIR ANY POINTS OF PONDING PRIOR TO THE TOP LIFT OF PAVEMENT. CONTACT THE DESIGN ENGINEER IF A SOLUTION IS NOT APPARENT FOR PONDING IN THE PAVEMENT.
8. ALL CONNECTIONS NOT MADE AT MANHOLES OR CATCHBASINS SHALL USE A "WYE" FITTING. GUTTER INLETS SHALL BE POURED IN-PLACE CONCRETE WITH A MINIMUM COMPRESSIVE STRENGTH OF 3300 PSI. FRAME SHALL BE FABRICATED OF STRUCTURAL STEEL, ASTM A-7, A-38, A373.
9. NO DRAINAGE PIPING OR PART THEREOF, WHICH IS CONSTRUCTED OF MATERIALS OTHER THAN THOSE APPROVED FOR USE UNDER OR WITHIN A BUILDING, SHALL BE INSTALLED UNDER OR WITHIN FIVE (5) FEET OF ANY BUILDING OR STRUCTURE, OR PART THEREOF AND NO LESS THAN ONE FOOT (1') BELOW THE SURFACE OF THE GROUND. THIS INCLUDES STRUCTURES SUCH AS PORCHES AND STEPS, WHETHER COVERED OR UNCOVERED, BREEZEWAYS, ROOFED PORTE-COCHERES, ROOFED PATIOS, CARPORTS, COVERED WALKS AND DRIVEWAYS, AND SIMILAR STRUCTURES OR APPURTENANCES.
10. ALL PUBLIC PIPE SHALL BE RIBBED PVC (ASTM D3034) OR CONCRETE. ALL PRIVATE PIPE SHALL BE PVC (ASTM D3034) OR CPE SMOOTH WALL INTERIOR/CORRUGATED EXTERIOR (AASHTO M252) OR OTHER MATERIAL AS SELECTED BY CONTRACTOR FROM THE CITY OR UNIFORM PLUMBING CODE (U.P.C.) APPROVED LIST AND SUBJECT TO THE APPROVAL OF THE ENGINEER AND PLUMBING INSPECTOR. EIGHT INCH TO 24-INCH STORM DRAIN PIPE IS PREFERRED TO BE SEAMLESS RIBBED PVC PIPE CONFORMING TO ASTM F 794. WHERE LARGER PIPE IS REQUIRED OR LACK OF COVER PREVENTS USE OF RIBBED PVC PIPE, PIPE SHALL BE CLASS 3 NON-REINFORCED, CONCRETE PIPE CONFORMING TO ASTM C14, REINFORCED CONCRETE PIPE CONFORMING TO ASTM C-76, CLASS IV, OR DUCTILE IRON PIPE CONFORMING TO AWWA C151 CLASS 52. RUBBER JOINTS ARE REQUIRED FOR ALL CONCRETE PIPE. SIX INCH AND SMALLER STORM DRAIN PIPE SHALL CONFORM TO ASTM D3034 PVC PIPE. STORM DRAIN SERVICE LATERALS SHALL BE 4" PIPE CONFORMING TO THE SAME SPECIFICATIONS AS THE STORM DRAIN MAIN LINES. SERVICE LATERALS SHALL BE INSTALLED TO A POINT BEYOND THE PROPERTY LINE OR UTILITY EASEMENT AS SHOWN ON THE PLAN. THE SERVICE LATERAL SHALL BE PLUGGED WITH A RUBBER RING PLUG WITH THE LOCATION OF THE LATERALS MARKED WITH AT 2"X4" STAKE PAINTED WHITE.
11. CONCRETE BEARER SLIDES REQUIRED ON ALL INSIDE DROP MANHOLES WITH TWO FEET OR LESS. NO FREE FALL PERMITTED.
12. MANHOLE BASE MAY BE POURED IN-PLACE CONCRETE WITH A MINIMUM COMPRESSIVE STRENGTH OF 3300 PSI OR PRECAST. MANHOLE RISERS AND TOPS SHALL BE PRECAST SECTIONS WITH AT MINIMUM COMPRESSIVE STRENGTH OF 4000 PSI. TOPS SHALL BE ECCENTRIC CONES EXCEPT WHERE INSUFFICIENT HEADROOM REQUIRES FLAT TOPS. INTERIOR DIMENSIONS NOTED ON THE PLANS ARE MINIMUMS. SOME OR ALL OF THE STORM DRAIN MANHOLES REQUIRED WILL BE OVERSIZED MANHOLES. CONTRACTOR SHALL CHECK WITH MANHOLE MANUFACTURER FOR ACTUAL SIZE OF MANHOLE NEEDED FOR TYPE AND SIZE OF PIPE TO BE USED. INVERTS SHALL BE CONSTRUCTED SO AS TO PROVIDE SMOOTH FLOW THROUGH CHARACTERISTICS AND CHANNELS MUST BE ABLE TO PASS A 7"X30" CYLINDER INTO PIPES. PIPE SHALL BE CONNECTED TO MANHOLE BY MEANS OF A FLEXIBLE CONNECTIONS AND SHALL HAVE A SHEAR JOINT LOCATED 18" OUTSIDE OF THE MANHOLE.
13. ALL MANHOLES LOCATED IN EASEMENT AREAS REQUIRE TAMPER PROOF LIDS AND LID SHALL BE SET 12 INCHES ABOVE PROPOSED GRADE. CLEANOUT PIPE, FITTINGS AND JOINTS SHALL BE THE SAME SPECIFICATIONS AS FOR PIPE. CASTINGS ARE SHOWN ON DETAIL AND SHALL CONFORM TO ASTM A48 (GRADE 30). CLEANOUT RISER SHALL MATCH DOWNSTREAM PIPE DIAMETER.
14. RIPRAP WHERE NOTED ON THE PLANS IS TO BE CLASS 50, 100 or 200 AS SHOWN ON THE DRAWINGS AND IN ACCORDANCE WITH OREGON STATE HIGHWAY DIVISION SPECIFICATION 714.
15. A PLUMBING PERMIT FROM THE CITY OF WEST LINN BUILDING DEPARTMENT IS REQUIRED FOR STORM DRAINS BEYOND THE FIRST CLEANOUT.
16. ALL MATERIALS, INSTALLATION, TESTS, AND INSPECTIONS TO BE IN STRICT ACCORDANCE WITH THE CITY OF WEST LINN STANDARD CONSTRUCTION SPECIFICATIONS.
17. DETENTION POND PLANTINGS TO CONFORM TO PLANTING PLANS, SHEETS L1.2-L1.4.
18. INSTALL TRACER WIRE AS REQUIRED BY THE U.P.C. AND CITY STANDARDS.

WATER SYSTEM GENERAL NOTES

1. ALL WATER LINES AND APPURTENANCES SHALL BE INSTALLED IN ACCORDANCE WITH CITY OF WEST LINN STANDARDS AND THE LATEST EDITION OF THE U.P.C. AND THE UNIFORM FIRE CODE (U.F.C.). GATE VALVES SHALL BE RESILIENT SEAL, NON-RISING STEM WITH O RING PACKING, COMPLYING WITH AWWA CLASS C SPECIFICATIONS. THE VALVES SHALL BE DESIGNED TO WITHSTAND A WORKING PRESSURE OF 150 PSI. GATE VALVES SHALL BE FURNISHED WITH A TWO-INCH SQUARE OPERATING NUT AND SHALL OPEN COUNTER CLOCKWISE WHEN VIEWING FROM ABOVE. BUTTERFLY VALVES SHALL BE RUBBER SEAL TYPE AND BUBBLE-TIGHT AT 150 PSI, AND SHALL CONFORM TO AWWA C504. BUTTERFLY VALVES SHALL BE MUELLER OR APPROVED EQUAL. OPERATING NUT SHALL BE LOCATED ON THE SIDE OF THE PIPE AS SHOWN ON THE PLANS. VALVE BOXES SHALL BE "VANCOUVER" PATTERN. FIRE HYDRANTS SHALL CONFORM WITH AWWA SPECIFICATION C-502. PUMPER OUTLET IS TO FACE THE DIRECTION OF ACCESS. ACCEPTABLE MODELS ARE MUELLER CENTURION A-423 OR CLOW MEDALLION F-2345. HYDRANT COLOR SHALL BE YELLOW. ALL MATERIALS, INSTALLATION, TESTS, AND CHLORINATION TO BE IN STRICT ACCORDANCE WITH THE CITY OF WEST LINN PUBLIC WORKS STANDARD CONSTRUCTION SPECIFICATIONS AND THE OREGON STATE HEALTH DIVISION ADMINISTRATIVE RULES, CHAPTER 333.
2. THE CITY OF WEST LINN SHALL BE NOTIFIED AT LEAST 48 HOURS PRIOR TO ANY WATER LINE CONSTRUCTION.
3. THE CONTRACTOR SHALL VERIFY THAT THE MINIMUM HORIZONTAL AND VERTICAL SEPARATION BETWEEN WATER AND SEWER UTILITIES HAS BEEN MAINTAINED AS REQUIRED BY THE CITY OF WEST LINN, THE OREGON HEALTH DIVISION AND THE U.P.C. THRUST LOCKS ARE TO BE PROVIDED OF ALL CHANGES IN DIRECTION AND BRANCHES. THRUST BLOCKING CONCRETE STRENGTH IS TO BE 3000 PSI. SEE DETAILS FOR THRUST BLOCK SIZING. POUR THRUST BLOCKS AGAINST UNDISTURBED EARTH.
4. ALL WATER MAIN INSTALLATIONS AND ALL TESTING SHALL BE COMPLETED IN ACCORDANCE WITH CITY OF WEST LINN, U.P.C AND U.F.C STANDARDS.
5. PIPE BEDDING AND BACKFILL SHALL CONFORM TO THE CITY OF WEST LINN STANDARDS FOR WORK INSIDE THE CITY RIGHT OF WAY AND TO THE PROJECT TECHNICAL SPECIFICATIONS, U.P.C. STANDARDS AND THE RECOMMENDATIONS OF THE GEOTECHNICAL REPORT FOR WORK ON PRIVATE PROPERTY. GRANULAR BACKFILL (3/4 -0) IS TO BE COMPACTED TO 95% MAXIMUM DRY DENSITY PER AASHTO T 180 TEST METHOD AND NATIVE MATERIAL SHALL BE COMPACTED TO 95% OF IN-PLACE DRY DENSITY OF SURROUNDING SOIL. EXCAVATION, BEDDING AND BACKFILL SHALL BE IN ACCORDANCE WITH DIVISION 204 OF THE CITY OF WEST LINN STANDARD CONSTRUCTION SPECIFICATIONS. BACKFILL UNDER NEW STREETS SHALL BE CLASS B AND BACKFILL IN EXISTING STREETS SHALL BE CLASS E.
6. DUCTILE IRON PIPE SHALL BE CLASS 52 CEMENT MORTAR LINED IN CONFORMANCE WITH AWWA C110. MECHANICAL JOINT FITTINGS SHALL CONFORM TO AWWA C153. WATER MAINS SHALL BE DUCTILE IRON PIPE CONFORMING TO AWWA C151 CLASS 52. PIPE IS TO HAVE CEMENT MORTAR LINING AND BITUMINOUS SEAL COAL CONFORMING TO AWWA C104. JOINTS ARE TO BE PUSH-ON RUBBER GASKETED JOINTS UNLESS NOTED OTHERWISE ON THE PLAN. PIPE FITTINGS ARE TO BE OF THE SAME MATERIAL AND CLASS AS PIPE AND OF DOMESTIC ORIGIN.
7. CONTRACTOR SHALL PERFORM ALL NECESSARY PRESSURE AND LEAKAGE TESTS ON ALL WATER LINES PER THE CITY OF WEST LINN STANDARDS.
8. ALL FITTINGS SHALL BE RESTRAINED PER THE CITY OF WEST LINN, U.P.C. AND U.F.C. STANDARDS.
9. PRIOR TO BEING PLACED IN SERVICE, THE WATER LINES AND SERVICES SHALL BE FLUSHED, TESTED AND STERILIZED BY THE CONTRACTOR IN THE PRESENCE OF THE CITY OF WEST LINN INSPECTORS. ALL WATERLINES WILL BE PRESSURE TESTED AND PURIFICATION TESTED BEFORE CONNECTION TO THE CITY WATER SYSTEM. PRESSURE TEST SHALL BE CONDUCTED AT 180 PSI OR 1.5 TIMES AT THE NORMAL WORKING PRESSURE, WHICHEVER IS HIGHER AND SHALL MEET THE REQUIREMENTS OF DIVISION 403.14 OF THE WEST LINN PUBLIC WORKS STANDARD CONSTRUCTION SPECIFICATIONS. CHLORINATION SHALL CONFORM TO DIVISION 403.14 OF THE W.L.S.G.C.S. DO NOT CONNECT NEW PIPE TO EXISTING PIPE PRIOR TO TESTING. THE CITY OF WEST LINN REQUIRES ACCEPTANCE OF NEW WATERLINE PRIOR TO CONNECTION TO THE EXISTING WATER SYSTEM.
10. CONTRACTOR SHALL MAINTAIN A MINIMUM OF 36" COVER OVER THE WATER LINE.
11. ALL FRAME COVERS, VALVE BOXES, MANHOLES, ETC. SHALL BE INSTALLED TO FINISH GRADE OR SHALL BE ADJUSTED TO FINISH GRADE PRIOR TO PLACING OF ASPHALT SURFACE COURSE BY THE CONTRACTOR.
12. ALL ON-SITE DOMESTIC WATER SERVICE SHALL BE INSTALLED BY OR UNDER THE DIRECT SUPERVISION OF A LICENSED PLUMBER. A PLUMBING PERMIT FROM THE CITY OF WEST LINN BUILDING DEPARTMENT IS REQUIRED FOR SERVICE LATERAL INSTALLATIONS BEYOND THE WATER METER.
13. SERVICE LATERALS SHALL BE TYPE K COPPER. LATERAL SIZES SHALL BE 1", FOR DOUBLE SERVICES, TWO 1" WATER SERVICES SHALL BE LAID SIDE BY SIDE. CORPORATION STOP SHALL BE MUELLER H 15008 OR FORD F1000 40. ANGLE METER STOP SHALL BE MUELLER H 14258 OR FORD 1-KV43-444W-Q. METER BOXES SHALL BE EQUAL TO BROOKS #37 WITH A 37-S LID AND COVER. METER BOXES ARE TO BE INSTALLED ¾" ABOVE FINISH GRADE AND 2 ½" FROM THE CURB IN THE PLANTER STRIP OR FLUSH WITH SIDEWALK SURFACE IN A SIDEWALK.

SANITARY SEWER GENERAL NOTES

1. SANITARY SEWER SYSTEM SHALL BE CONSTRUCTED IN ACCORDANCE WITH THE CITY OF WEST LINN AND U.P.C. STANDARDS. ALL MATERIALS, INSTALLATION, TESTS AND INSPECTIONS ARE TO BE MADE IN STRICT ACCORDANCE WITH CITY OF WEST LINN PUBLIC WORKS STANDARD CONSTRUCTION SPECIFICATIONS.
2. NO DRAINAGE PIPING OR PART THEREOF, WHICH IS CONSTRUCTED OF MATERIALS OTHER THAN THOSE APPROVED FOR USE UNDER OR WITHIN A BUILDING, SHALL BE INSTALLED UNDER OR WITHIN FIVE (5) FEET OF ANY BUILDING OR STRUCTURE, OR PART THEREOF, OR LESS THAN ONE FOOT (1') BELOW THE SURFACE OF THE GROUND. THIS INCLUDES STRUCTURES SUCH AS PORCHES AND STEPS, WHETHER COVERED OR UNCOVERED, BREEZEWAYS, ROOFED PORTE-COCHERES, ROOFED PATIOS, CARPORTS, COVERED WALKS AND DRIVEWAYS, AND SIMILAR STRUCTURES OR APPURTENANCES.
3. VACUUM MANDREL, VIDEO AND AIR TESTING OF PUBLIC SANITARY LINES AND MANHOLES SHALL BE CONDUCTED IN ACCORDANCE WITH THE THE CITY OF WEST LINN PUBLIC WORKS REQUIREMENTS. PRIVATE SANITARY LINES SHALL BE WATER OR AIR TESTED IN ACCORDANCE WITH CITY OF WEST LINN BUILDING DEPARTMENT AND U.P.C. STANDARDS. SANITARY SEWER PIPE AND APPURTENANCES SHALL BE TESTED FOR LEAKAGE IN ACCORDANCE WITH W.L.S.G.S. DIVISION 301.03.01 AND MANHOLES SHALL BE VACUUM TESTED IN ACCORDANCE WITH W.L.S.G.S DIVISION 302.03.07. ALL TESTS SHALL BE WITNESSED BY THE ENGINEER AND THE CITY OF WEST LINN. CONTRACTOR IS RESPONSIBLE FOR COORDINATING TESTING SO THAT ALL TESTS SHALL BE PASSED AND THE NEW LINES SHALL BE ACCEPTED PRIOR TO CONNECTION TO EXISTING SYSTEM.
4. ALL NECESSARY TESTS SHALL BE PERFORMED BY THE CONTRACTOR AND WITNESSED BY THE CITY AND ENGINEER.
5. FINISHED RIM ELEVATIONS OF MANHOLES AND/OR CLEANOUTS WITHIN PAVEMENT ARE APPROXIMATE. FINAL FINISHED RIM ELEVATIONS SHALL MATCH FINISHED PAVEMENT GRADES.
6. PIPE BEDDING AND BACKFILL SHALL CONFORM TO THE CITY OF WEST LINN STANDARDS FOR WORK INSIDE THE CITY RIGHT OF WAY AND TO THE PROJECT TECHNICAL SPECIFICATIONS, U.P.C. STANDARDS AND THE RECOMMENDATIONS OF THE GEOTECHNICAL REPORT FOR WORK ON PRIVATE PROPERTY.
7. THE CONTRACTOR SHALL VERIFY THAT THE MINIMUM HORIZONTAL AND VERTICAL SEPARATION BETWEEN WATER AND SEWER UTILITIES HAS BEEN MAINTAINED AS REQUIRED BY THE CITY OF WEST LINN, THE OREGON HEALTH DIVISION AND THE U.P.C.
8. SANITARY SEWER PIPE SHALL BE ASTM D3034 SDR 35 AND SHALL BE GREEN IN COLOR UNLESS OTHERWISE NOTED. PIPE SHALL BE PVC SEWER PIPE CONFORMING TO ASTM D-3034 SDR 35. MINIMUM STIFFNESS SHALL BE 46 PSI AND JOINT TYPE SHALL BE ELASTOMERIC GASKET CONFORMING TO ASTM F-477.
9. INSTALL CONTINUOUS INSULATED COPPER TRACER WIRE AS REQUIRED BY THE U.P.C.
10. MANHOLE BASES SHALL BE POURED IN PLACE CONCRETE BASE WITH A MINIMUM COMPRESSIVE STRENGTH OF 3300 PSI OR PRECAST. MANHOLE RISERS AND TOPS SHALL BE PRECAST SECTIONS WITH MINIMUM COMPRESSIVE STRENGTH OF 4000 PSI. TOPS SHALL BE ECCENTRIC CONES EXCEPT WHERE INSUFFICIENT HEADROOM REQUIRES FLAT TOPS. INVERTS SHALL BE CONSTRUCTED SO AS TO PROVIDE SMOOTH FLOW-THROUGH CHARACTERISTICS AND CHANNELS MUST BE ABLE TO PASS A 7"X30" CYLINDER INTO PIPES. PVC PIPE SHALL BE CONNECTED TO MANHOLE BY MEANS OF A FLEXIBLE CONNECTIONS AND SHALL HAVE A SHEAR JOINT LOCATED 18" OUTSIDE OF MANHOLE. CEMENT GROUT FOR CONNECTING PVC SEWER PIPE TO MANHOLE WILL NOT BE PERMITTED.
11. ALL MANHOLES LOCATED IN EASEMENT AREAS REQUIRE TAMPER PROOF LIDS AND THE LID SHALL BE SET 12 INCHES ABOVE PROPOSED GRADE.
12. CLEANOUT PIPE, FITTINGS AND JOINTS SHALL BE THE SAME SPECIFICATIONS AS FOR PIPE. CASTINGS ARE AS SHOWN ON DETAILS AND SHALL CONFORM TO ASTM A48 (GRADE 30). CLEANOUT RISERS SHALL MATCH DOWNSTREAM PIPE DIAMETER. FRAMES SHALL BE SET ON 18"x24" CONCRETE PAD.
13. GRANULAR BACKFILL (3/4 -0) IS TO BE COMPACTED TO 95% MAXIMUM DRY DENSITY PER AASHTO T-180 TEST METHOD AND NATIVE MATERIAL SHALL BE COMPACTED TO 95% OF IN-PLACE DRY DENSITY OF SURROUNDING SOIL. EXCAVATION, BEDDING AND BACKFILL SHALL BE IN ACCORDANCE WITH DIVISION 204 OF THE CITY OF WEST LINN STANDARD CONSTRUCTION SPECIFICATIONS. BACKFILL UNDER NEW STREETS SHALL BE CLASS B AND BACKFILL IN EXISTING STREETS SHALL BE CLASS E.
14. PVC SERVICE LATERALS SHALL BE 4" PIPE CONFORMING TO THE SAME SPECIFICATIONS AS THE SEWER MAINS. SERVICE LATERALS SHALL BE INSTALLED TO A POINT BEYOND THE PROPERTY LINE OF THE SEWER OR UTILITY EASEMENT AS SHOWN ON THE PLAN. THE SERVICE LATERAL SHALL BE PLUGGED WITH A RUBBER RING PLUG WITH THE LOCATION OF THE LATERAL MARKED WITH A 2"x4" STAKE PAINTED GREEN.
15. A PLUMBING PERMIT FROM THE CITY OF WEST LINN BUILDING DEPARTMENT IS REQUIRED FOR SANITARY SEWER LATERALS BEYOND THE FIRST CLEANOUT.

RECORD DRAWINGS
Prepared By: Chuck Gregory Date: 7/31/12
Chuck Gregory, P.E.
THESE RECORD DRAWINGS HAVE BEEN PREPARED, IN PART, ON THE BASIS OF AS-BUILT INFORMATION COMPILED BY THE CONTRACTOR AND PERIODIC OBSERVATIONS DURING CONSTRUCTION. THE INFORMATION CONTAINED IN THESE DRAWINGS ARE TO THE BEST OF MY KNOWLEDGE AN ACCURATE RECORD OF THE CONSTRUCTED PUBLIC IMPROVEMENTS. IT IS RECOMMENDED THAT USERS OF THESE DRAWINGS FIELD VERIFY UTILITY SIZES, LOCATIONS AND ELEVATIONS.

THE SAUNDERS COMPANY
DESIGN GROUP
901 N. Brutscher, Ste. 202
Newberg, Oregon 97132
Phone: 503-537-9347
www.thesaunderscompany.net

REGISTERED PROFESSIONAL ENGINEER
50644PE
OREGON
SEPT. 14, 1993
CHARLES EDWARD GREGORY
7/31/12
RENEWS: JUNE 30, 2013

J.T. SMITH companies

Teresa's Vineyard
Public Improvements
Sub-07-02/NDW-07-02/VAR-07-01
West Linn, Oregon

REV	DATE	SUMMARY
1	8/5/11	Client/Agency Comments
2	8/30/11	Agency Comment
	7/2/12	Add'l As Built
	1/27/12	As Built

Project #: 9130 Drawn: CEG

UTILITY CONSTRUCTION NOTES

Date: April 15, 2011

C1.1b

\\SERVER\Land Projects\9130\ENGINEERING\Construction Documents\Drawings\Permit Submittal\9130-NOTES.dwg, 7/24/2012 9:34:20 AM, The Saunders Company

T/ ...

RECEIVED
JUL 0 6 2007
PERKINS COIE

WEST LINN PLANNING COMMISSION
FINAL DECISION NOTICE
SUB-07-02/NDW-07-02/VAR-07-01

IN THE MATTER OF THE PROPOSAL OF A 2-PHASE, 30-LOT SINGLE-FAMILY SUBDIVISION WITH NATURAL DRAINAGEWAY AND WETLANDS PERMITS AND A VARIANCE FOR STREET GRADE AT 23535-23600 SALAMO ROAD AND 3415 S. HASKINS LANE

At their meeting of June 28, 2007, the West Linn Planning Commission held a public hearing to consider the request by Jeff and Teresa Smith to approve a subdivision, street grade variance, natural drainageway permit, and wetlands permit at 23535-23600 Salamo Road and 3415 S. Haskins Lane. The proposal would result in the conversion of mostly agricultural land with one existing house and a barn into a 30-lot subdivision with two open space tracts, in which 29 lots would contain new houses and one lot would contain the existing house. A variance to exceed the CDC's limit of 15% for street grades was also requested for both streets proposed on site. The approval criteria for land division are found within Chapter 85 of the CDC. The variance criteria are found within Chapter 75 of the CDC. The approval criteria for Wetlands Permit and Natural Drainageway Permit are found in CDC chapters 30 and 32, respectively, as they stood at the time this application was initially submitted in January 2007. The hearing was conducted pursuant to the provisions of CDC Chapter 99. Because this is a two-phase subdivision application, the applicant has up to 5 years to complete the subdivision process.

The hearing commenced with a staff report presented by Tom Soppe, Associate Planner. The applicant Mr. Smith provided a presentation, and the others presenting for the applicant were Michael Robinson of Perkins Coie, and Brad Kilby and Darrin Stairs of Otak. No one else spoke in favor of the application. Michael Riley testified in opposition, and Gary Alfson testified neutrally. The applicant's rebuttal was provided by Mr. Robinson.

A motion was made, seconded, and passed to approve the application with four additional findings, an addition to Condition of Approval 15 regarding construction in the drainageway area, two additional conditions of approval regarding utility provision and vehicular access to the neighboring property at 3401 S. Haskins Lane, and with the elimination of conditions of approval 14 and 18 as included the staff report recommendation.

Additional Findings

1. The configuration changes and tree preservation clarification provided by the new site plan/tree preservation plan submitted by the applicant on June 18 renders Conditions of Approval 14 and 18 moot, as the intent of both conditions is fulfilled by this plan.

2. To best protect the drainageway and transition area during construction, an addition to current Condition of Approval 15 (to be renumbered as 14 per the changes of Additional

Finding 1) is needed to ensure that work in the drainageway area is only conducted during ODFW-defined in-water work periods.

3. The neighboring property at 3401 S. Haskins Lane has one existing house, and may develop into four lots in the future. Assurance is needed that all appropriate vehicular access and utility provision and access be provided by the applicant to sufficiently accommodate and serve the current residence at this neighboring property and all potential future lots at this property.

4. The variance allowing street grades of up to 18.9%, beyond the CDC's maximum of 15%, is justified for all reasons noted in the staff report and because Portland and some other cities have allowed 20% as a maximum street grade within acceptable safety standards.

The final conditions of approval are presented and renumbered as follows:

1. The applicant shall dedicate both open space tracts at the southeast corner of the site to the City.

2. The applicant shall construct a trail from the street loop west of the storm drainage pond south to the Haskins Lane ROW. The applicant shall construct a trail from here west along the Haskins Lane ROW to connect with the existing stub trail on this ROW near Salamo Road. The trails shall be constructed to be compliant with CDC 85.200(C).

3. Applicant shall construct sidewalks to bypass significant trees and as much of their dripline + 10 feet areas as possible, including tree 2552 adjacent to Lot 8. Sidewalk widths shall be reduced to 4 feet within these dripline + 10 feet areas. Plans to preserve these trees via sidewalk bypassing and narrowing shall be reviewed for approval by the City Arborist. If necessary to preserve significant trees, such plans can include terminated sidewalks (with a crosswalk to the sidewalk on the other side of the street) and narrowed streets (to a maximum of 20 foot roadway, without a narrowed ROW). Any such trees that cannot be preserved via this condition of approval shall be mitigated for, per the stipulations of Condition of Approval 20.

5. Applicant must repipe the piped drainage in the northwest section of the site with a pipe that is large enough to carry the anticipated buildout capacity of the drainageway currently piped here. The applicant's engineer should verify to the Engineering Department the adequacy of the entire length of the piped drainage on and adjacent to the site including the pipe sizes, existing capacity, and the capacity needed. This shall not include the pipes to the north or south of the site boundary under existing Coeur d'Alene Drive.

5. Applicant will contribute to future construction of signalization of the Rosemont/Salamo/Santa Anita intersection based upon impact identified in the traffic study, with the current amount of $1,072.00/peak hour trip as of 11/16/2004 inflation adjusted by ENR CCI at time of building permit issuance..

6. Applicant will be responsible for undergrounding (or fee in-lieu) all utilities along all property frontages.

7. Applicant must provide paved access to all stormwater facilities/infrastructure in accordance with City standards.

8. Applicant must perform a lighting study along the Salamo frontage. If lighting is below City standards, the applicant must provide a plan and lights to bring frontage illumination to City standards.

9. Applicant must construct Salamo Road improvements as identified by the City Engineer, not to exceed cost of frontage improvements, to meet current City standards.

10. Applicant must construct all public improvements to City of West Linn Design and Construction Standards.

11. Applicant must provide five-foot wide utility easements on the front and rear of each lot and on the site street side of corner lots.

12. Applicant shall obtain and present to the City all necessary Division of State Lands and U.S. Army Corps of Engineers permits and any other necessary permits from other agencies.

13. Applicant shall use the standards and rankings in CDC Section 30.100(F) (in place at the time of applicant's application) in evaluating mitigation proposals and in drafting the mitigation plan to be submitted to the City.

14. Installation of the culvert and utilities under the wetland and drainageway in the southeast area of the site shall involve boring only and not digging. Construction activities that involve in-water work or work within the drainageway in the southeast area of the site shall be conducted during ODFW in-water work periods.

15. The applicant shall provide a storm drainage report incorporating the suggestions from Gordon Munro's March 22, 2007 memo to Boris Piatski of the Engineering Department (Exhibit PC-9).

16. The applicant shall provide profile drawings of all storm drainage and detention facilities proposed for the site.

17. Prior to commencement of any site clearing or grading, the applicant shall place anchored and secured chain link fencing around the dripline + 10 areas of all significant trees to be preserved. The City arborist shall inspect and approve this location prior to the start of work. The fencing shall remain in place throughout the development of the site and construction of the homes, to be removed only upon the completion of all construction activity.

18. A mitigation plan shall be proposed to replace significant trees scheduled for removal from areas where ROW and utility easement placement will necessitate their removal. The mitigation plan shall be submitted to the City arborist. The mitigation plan shall propose to replace these significant trees on an inch by inch basis as explained in CDC 55.100(B)(2)(f).

19. The applicant shall provide an additional utility easement along the northern boundary of the open space tract south of proposed Lot 23. The access easements between proposed lots 22 and 23 as well as the access utility easement along the north property line of proposed Lot 21 shall be paved with 20 feet of pavement width.

20. For potential lot GA-1 of the 3401 S. Haskins Lane property, the applicant shall stub utilities to the west end of the right of way. The applicant shall stub the utilities to the property line for potential lots GA-2 through GA-4 of the 3401 S. Haskins Lane property.

This decision will become effective 14 days from the date of mailing of this final decision as identified below. Those parties with standing (i.e., those individuals who submitted letters into the record, or provided oral or written testimony during the course of the hearing, or signed in on the attendance sheet at the hearing, or who have contacted City Planning staff and made their identities known to staff) may appeal this decision to the West Linn City Council within 14 days of the mailing of this decision pursuant to the provisions of Chapter 99 of the Community Development Code. Such appeals would require a fee of $400 and a completed appeal application form together with the specific grounds for appeal to the Planning Director prior to the appeal-filing deadline.

Michael Jones (signature) — 6/29/07
MICHAEL JONES, CHAIR — DATE
WEST LINN PLANNING COMMISSION

Mailed this 5th day of July, 2007.

Therefore, this decision becomes final at 5 p.m., July 19th, 2007.

Devrev/Finaldecisions/SUB-07-02

RECORD DRAWINGS
Prepared By: Chuck Gregory (signature) Date: 7/31/12
Chuck Gregory, P.E.

THESE RECORD DRAWINGS HAVE BEEN PREPARED, IN PART, ON THE BASIS OF AS-BUILT INFORMATION COMPILED BY THE CONTRACTOR AND PERIODIC OBSERVATIONS DURING CONSTRUCTION. THE INFORMATION CONTAINED IN THESE DRAWINGS ARE TO THE BEST OF MY KNOWLEDGE AN ACCURATE RECORD OF THE CONSTRUCTED PUBLIC IMPROVEMENTS. IT IS RECOMMENDED THAT USERS OF THESE DRAWINGS FIELD VERIFY UTILITY SIZES, LOCATIONS AND ELEVATIONS.

THE SAUNDERS COMPANY
DESIGN GROUP
901 N. Brutscher, Ste. 202
Newberg, Oregon 97132
Phone: 503-537-9347
www.thesaunderscompany.net

7/31/12
REGISTERED PROFESSIONAL ENGINEER
50644PE
OREGON
SEPT. 14, 1999
CHARLES EDWARD GREGORY
RENEWS: JUNE 30, 2013

J.T. SMITH companies

Teresa's Vineyard
Public Improvements
Sub-07-02/NDW-07-02/VAR-07-01
West Linn, Oregon

REV	DATE	SUMMARY
	7/2/12	Add'l As Built
	1/27/12	As Built

Project #: 9130 Drawn:

FINAL DECISION NOTICE CONDITIONS OF APPROVAL

Date: April 15, 2011

C1.2

\\SERVER\Land Projects\9130\ENGINEERING\Construction Documents\Drawings\Permit Submittal\9130-NOTES.dwg, 7/24/2012 9:34:27 AM, The Saunders Company

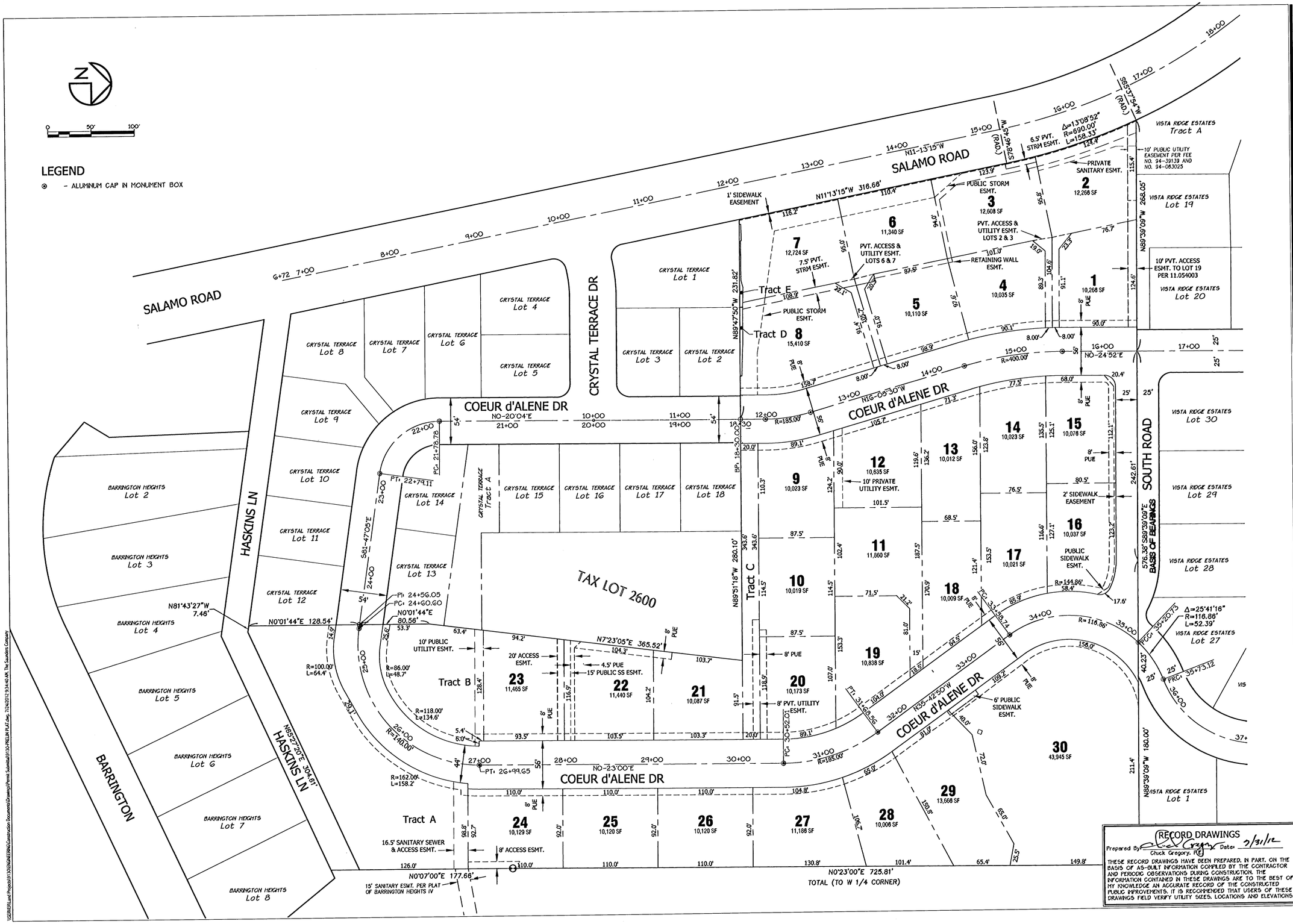

RECORD DRAWINGS

Prepared By: Chuck Gregory, P.E. Date: 7/31/12

THESE RECORD DRAWINGS HAVE BEEN PREPARED, IN PART, ON THE BASIS OF AS-BUILT INFORMATION COMPILED BY THE CONTRACTOR AND PERIODIC OBSERVATIONS DURING CONSTRUCTION. THE INFORMATION CONTAINED IN THESE DRAWINGS ARE TO THE BEST OF MY KNOWLEDGE AN ACCURATE RECORD OF THE CONSTRUCTED PUBLIC IMPROVEMENTS. IT IS RECOMMENDED THAT USERS OF THESE DRAWINGS FIELD VERIFY UTILITY SIZES, LOCATIONS AND ELEVATIONS.

THE SAUNDERS COMPANY
DESIGN GROUP
901 N. Brutscher, Ste. 202
Newberg, Oregon 97132
Phone: 503-537-9347
www.thesaunderscompany.net

7/31/12

REGISTERED PROFESSIONAL ENGINEER 50644PE OREGON SEPT. 14, 1999 CHARLES EDWARD GREGORY

RENEWS: JUNE 30, 2013

J.T. SMITH companies

Teresa's Vineyard
Public Improvements
Sub-07-02/NDW-07-02/VAR-07-01
West linn, Oregon

REV	DATE	SUMMARY
1	8/5/11	Client/Agency Comments
2	8/30/11	Agency Comments
	1/6/12	As Built

Project #: 9130 Drawn: TGL

PRELIMINARY PLAT

Date: April 15, 2011

C 1.3

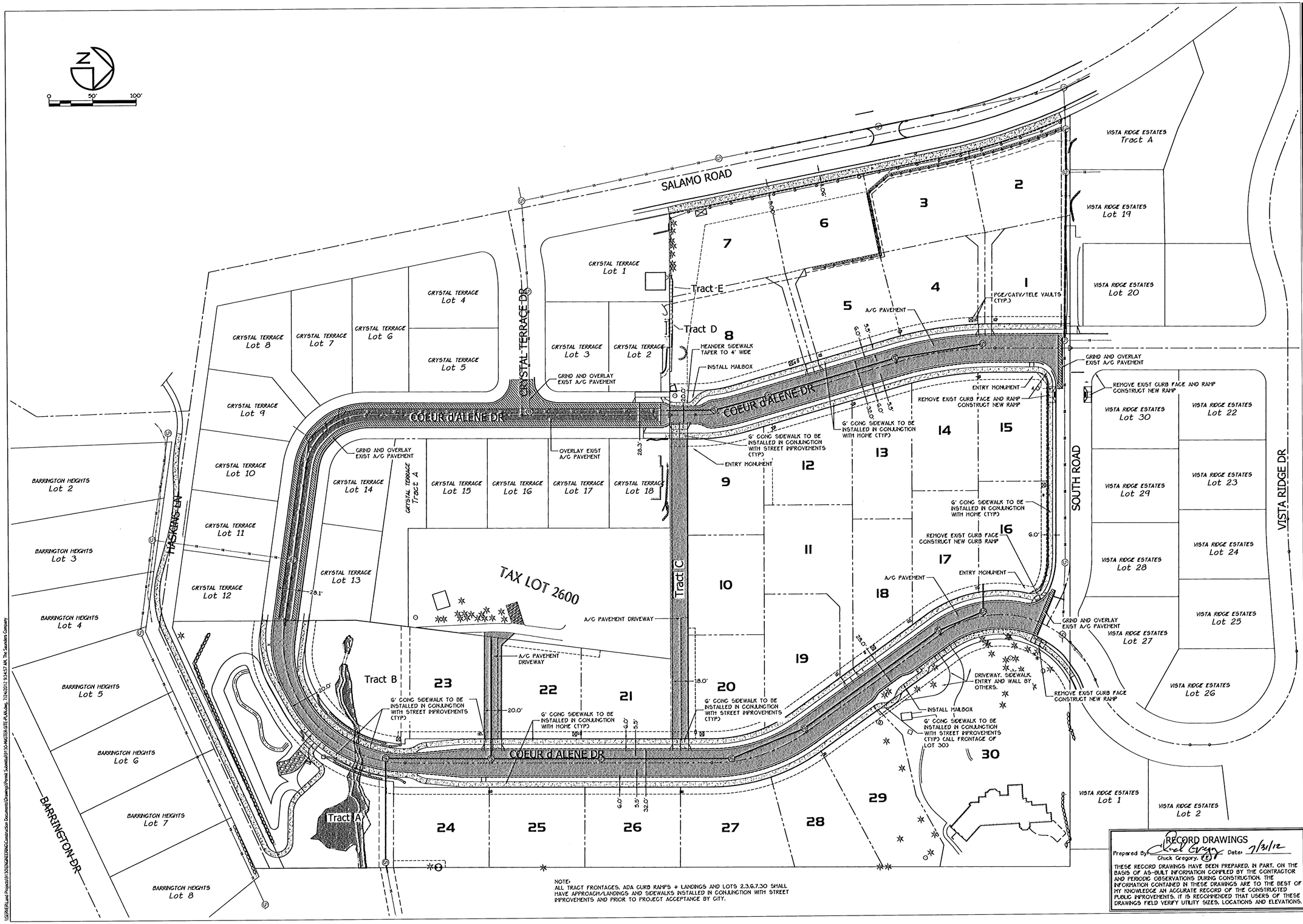

NOTE:
ALL TRACT FRONTAGES, ADA CURB RAMPS + LANDINGS AND LOTS 2,3,6,7,30 SHALL HAVE APPROACH/LANDINGS AND SIDEWALKS INSTALLED IN CONJUNCTION WITH STREET IMPROVEMENTS AND PRIOR TO PROJECT ACCEPTANCE BY CITY.

RECORD DRAWINGS
Prepared By: Chuck Gregory Date: 7/31/12
Chuck Gregory, P.E.
THESE RECORD DRAWINGS HAVE BEEN PREPARED, IN PART, ON THE BASIS OF AS-BUILT INFORMATION COMPILED BY THE CONTRACTOR AND PERIODIC OBSERVATIONS DURING CONSTRUCTION. THE INFORMATION CONTAINED IN THESE DRAWINGS ARE TO THE BEST OF MY KNOWLEDGE AN ACCURATE RECORD OF THE CONSTRUCTED PUBLIC IMPROVEMENTS. IT IS RECOMMENDED THAT USERS OF THESE DRAWINGS FIELD VERIFY UTILITY SIZES, LOCATIONS AND ELEVATIONS.

THE SAUNDERS COMPANY
DESIGN GROUP
901 N. Brutscher, Ste. 202
Newberg, Oregon 97132
Phone: 503-537-9347
www.thesaunderscompany.net

7/31/12
REGISTERED PROFESSIONAL ENGINEER 50644PE OREGON SEPT. 14, 1995 CHARLES EDWARD GREGORY
RENEWS: JUNE 30, 2013

J.T. SMITH companies

Teresa's Vineyard
Public Improvements
Sub-07-02/NDW-07-02/VAR-07-01
West Linn, Oregon

REV	DATE	SUMMARY
1	8/5/11	Client/Agency Comments
2	8/30/11	Agency Comments
	7/2/12	Add'l As Built
	1/27/12	As Built

Project #: 9130 Drawn: CL

MASTER SITE PLAN

Date: April 15, 2011

C1.4

\\SERVER\Land Projects\9130\ENGINEERING\Construction Documents\Drawings\Permit Submittal\9130-MASTER-SITE-PLAN.dwg, 7/24/2012 9:34:57 AM, The Saunders Company

LEGEND:

- EXISTING BOUNDARY LINE
- EXISTING CENTERLINE
- EXISTING RIGHT-OF-WAY LINE
- FENCE LINE, TYPE AS NOTED
- DRIVEWAY CURB CUT & APRON
- CC — FLOW LINE (DITCH/DRAINAGEWAYS)
- SD — UNDERGROUND STORM LINE
- SS — UNDERGROUND SANITARY SEWER LINE
- W — UNDERGROUND WATER LINE
- P — UNDERGROUND ELECTRICAL LINE
- T — UNDERGROUND TELEPHONE LINE
- OHW — OVERHEAD WIRE
- PA — PUBLIC ANNOUNCEMENT LINE
- G — UNDERGROUND GAS LINE
- 174 — EXISTING 1' CONTOUR LINE
- 175 — EXISTING 5' CONTOUR LINE
- EXISTING RETAINING WALL (DESC.)
- TREE/VEGETATION LINE
- CONIFEROUS TREE
- DECIDUOUS TREE
- MAILBOX
- SIGN
- EXISTING CONCRETE SURFACE
- EXISTING GRAVEL SURFACE
- (*) — RECORD UTILITY DATA
- UNKNOWN MANHOLE
- STORM DRAIN MANHOLE
- CATCH BASIN/INLET BASIN
- CURB INLET STRUCTURE
- AREA DRAIN
- SEWER MANHOLE
- FIRE HYDRANT
- WATER VALVE
- WATER METER
- IRRIGATION METER/VALVE
- GAS FINK
- GAS VALVE
- GAS WARNING SIGN
- UNDERGROUND VAULT (DESC)
- ELECTRICAL VAULT
- ELECTRICAL RISER
- TELEPHONE MANHOLE
- TELEPHONE RISER
- TELEPHONE VAULT
- LIGHT POLE
- UTILITY POLE
- GUY WIRE
- STAND PIPE
- TEST PIT

SURVEY NOTES

1. ELEVATIONS ARE BASED ON THE CITY OF WEST LINN BENCH MARK

   BENCH MARK "B" ELEV=667.22
   LOCATED 93.5' EAST AND 17.0' SOUTH OF THE EDGE OF PAVEMENT FROM THE 5-WAY INTERSECTION OF ROSEMONT AND SANTA ANA, SAID BENCHMARK BEING A 3" CAP ON A PIPE WITH YELLOW WATERWORKS LID PER FIELD TIE TO THE AS-BUILT RIM ELEVATION OF THE SANITARY SEWER MANHOLE LOCATED AT THE INTERSECTION OF SOUTH ROAD AND COUER D'ALENE DRIVE AS SHOWN ON THE CITY AS-BUILTS FOR VISTA RIDGE (MANHOLE RIM ELEV=525.64).

2. BASIS OF BEARINGS: BEARINGS FOR THIS SURVEY ARE ON BASED ON HOLDING SOUTH 89°39'09" EAST FOR THE CENTERLINE OF SOUTH ROAD AND ITS EASTERLY EXTENSION PER FOUND MONUMENTS PER THE PLAT OF "VISTA RIDGE ESTATES" (PLAT #3113).

3. COORDINATE DATUM: COORDINATES ARE ON AN ASSUMED DATUM.

4. BOUNDARY LINES ARE SHOWN PER THE FIELD SURVEY BY THE SAUNDERS COMPANY IN MARCH, 2011.

5. SEE SHEETS C2.1 – C2.6 FOR DETAILED INFORMATION ON UTILITIES, TOPOGRAPHY AND TREE TABLES.

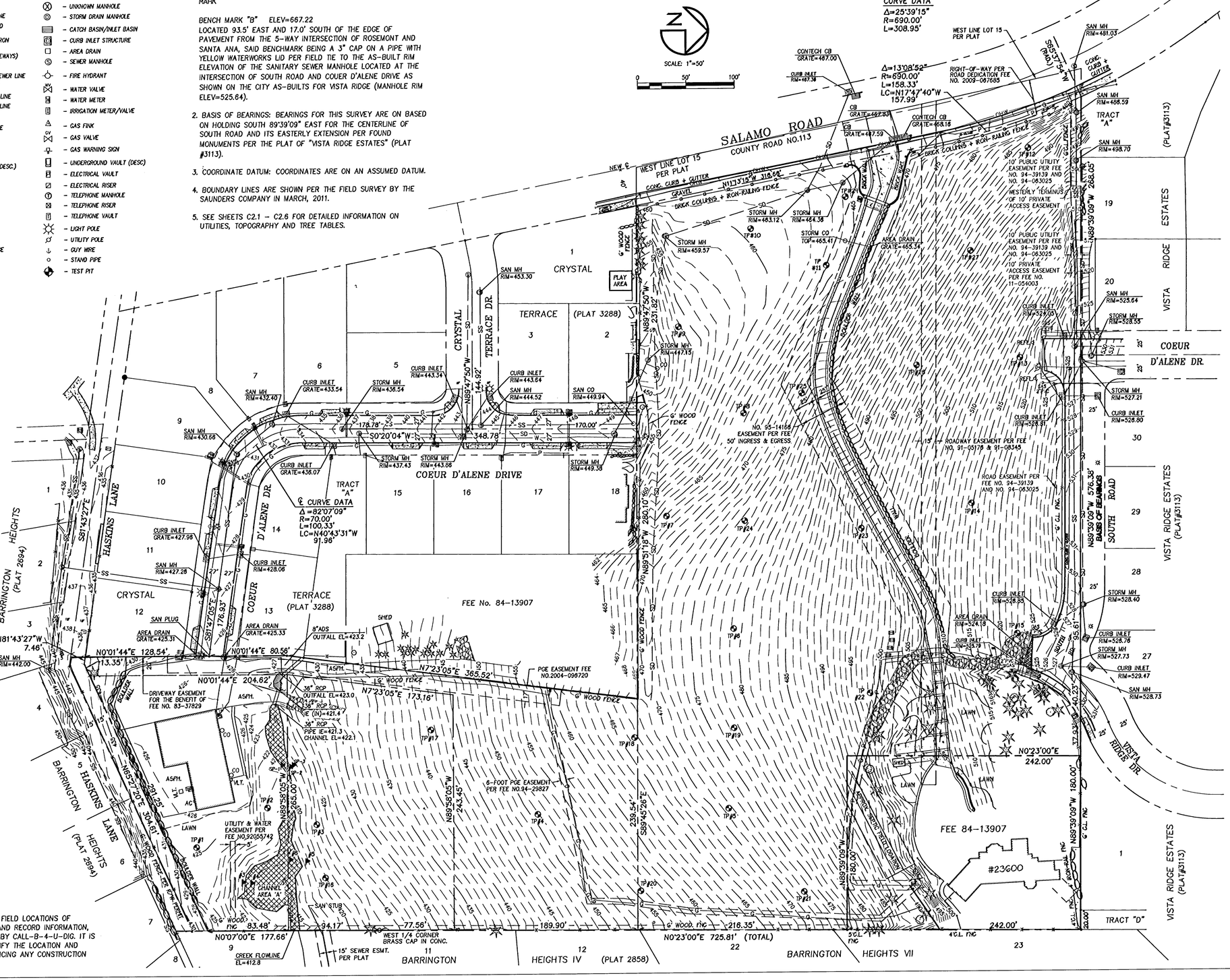

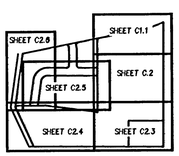

DETAIL SHEET INDEX
N.T.S.

UTILITY STATEMENT

UTILITY LOCATIONS ARE SHOWN BASED ON FIELD LOCATIONS OF EXISTING FACILITIES, AS-BUILT DRAWINGS AND RECORD INFORMATION, AND LOCATES OF UNDERGROUND UTILITIES BY CALL-B-4-U-DIG. IT IS THE CONTRACTORS RESPONSIBILITY TO VERIFY THE LOCATION AND DEPTH OF ALL UTILITIES PRIOR TO COMMENCING ANY CONSTRUCTION ACTIVITIES.

THE SAUNDERS COMPANY
DESIGN GROUP
901 N. Brutscher, Ste. 202
Newberg, Oregon 97132
Phone: 503-537-9347
www.thesaunderscompany.net

08/06/12
REGISTERED PROFESSIONAL LAND SURVEYOR
OREGON JULY 16, 1987 THEODORE G. LAMBERT 2294
EXPIRES: 12-31-2012

J.T. SMITH companies

Teresa's Vineyard
Public Improvements
Sub-07-02/NDW-07-02/VAR-07-01
West Linn, Oregon

REV	DATE	SUMMARY
1	8/2/11	Client/Agency Comments
	7/2/12	Add'l As Built
	1/27/12	As Built

Project #: 9130 Drawn: TGL

OVERALL EXISTING CONDITIONS

Date: April 15, 2011

C 2.0

\\SERVER\Land Projects\9130\SURVEY\Drawings\9130-SURVEY-02ST-50 Scale:Jeng, 7/24/2012 9:35:18 AM, The Saunders Company

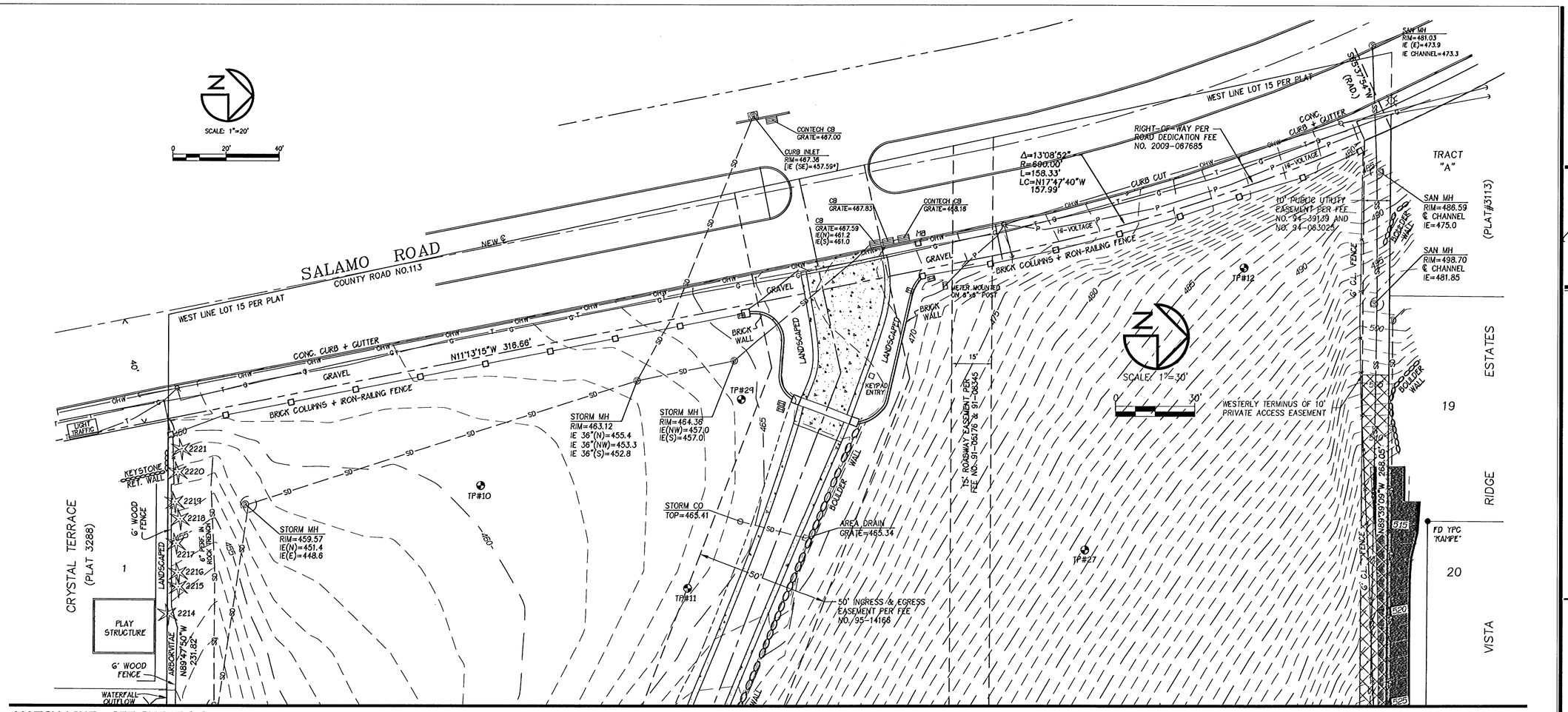

LEGEND:

- EXISTING BOUNDARY LINE
- EXISTING CENTERLINE
- EXISTING RIGHT-OF-WAY LINE
- FENCE LINE, TYPE AS NOTED
- DRIVEWAY CURB CUT & APRON
- FLOW LINE (DITCH/DRAINAGEWAYS)
- UNDERGROUND STORM LINE
- UNDERGROUND SANITARY LINE
- UNDERGROUND WATER LINE
- UNDERGROUND ELECTRICAL LINE
- UNDERGROUND TELEPHONE LINE
- OVERHEAD WIRE
- UNDERGROUND GAS LINE
- EXISTING 1' CONTOUR LINE
- EXISTING 5' CONTOUR LINE
- EXISTING RETAINING WALL (DESC.)
- TREE/VEGETATION LINE
- CONIFEROUS TREE
- DECIDUOUS TREE
- EXISTING ASPHALT SURFACE
- EXISTING CONCRETE SURFACE
- EXISTING GRAVEL SURFACE

- RECORD UTILITY DATA
- UNKNOWN MANHOLE
- STORM DRAIN MANHOLE
- CATCH BASIN/INLET BASIN
- CURB INLET STRUCTURE
- AREA DRAIN
- SEWER MANHOLE
- FIRE HYDRANT
- WATER VALVE
- WATER METER
- IRRIGATION METER/VALVE
- GAS FINK
- GAS VALVE
- GAS WARNING SIGN
- UNDERGROUND VAULT (AS NOTED)
- ELECTRICAL VAULT
- ELECTRICAL RISER
- TELEPHONE MANHOLE
- TELEPHONE RISER
- TELEPHONE VAULT
- LIGHT POLE
- UTILITY POLE
- GUY WIRE
- STAND PIPE
- MAILBOX
- SIGN
- TEST PIT

SURVEY NOTES

1. ELEVATIONS ARE BASED ON THE CITY OF WEST LINN BENCH MARK

   BENCH MARK "B" ELEV=667.22
   LOCATED 93.5' EAST AND 17.0' SOUTH OF THE EDGE OF PAVEMENT FROM THE 5-WAY INTERSECTION OF ROSEMONT AND SANTA ANA, SAID BENCHMARK BEING A 3" CAP ON A PIPE WITH YELLOW WATERWORKS LID PER FIELD TIE TO THE AS-BUILT RIM ELEVATION OF THE SANITARY SEWER MANHOLE LOCATED AT THE INTERSECTION OF SOUTH ROAD AND COUER D'ALENE DRIVE AS SHOWN ON THE CITY AS-BUILTS FOR VISTA RIDGE (MANHOLE RIM ELEV=525.64).

2. BASIS OF BEARINGS: BEARINGS FOR THIS SURVEY ARE ON BASED ON HOLDING SOUTH 89°39'09" EAST FOR THE CENTERLINE OF SOUTH ROAD AND ITS EASTERLY EXTENSION PER FOUND MONUMENTS PER THE PLAT OF "VISTA RIDGE ESTATES" (PLAT #3113).

3. COORDINATE DATUM: COORDINATES ARE ON AN ASSUMED DATUM.

4. BOUNDARY LINES ARE SHOWN PER THE FIELD SURVEY BY THE SAUNDERS COMPANY IN MARCH, 2011..

UTILITY STATEMENT

UTILITY LOCATIONS ARE SHOWN BASED ON FIELD LOCATIONS OF EXISTING FACILITIES, AS-BUILT DRAWINGS AND RECORD INFORMATION, AND LOCATES OF UNDERGROUND UTILITIES BY CALL-B-4-U-DIG. IT IS THE CONTRACTORS RESPONSIBILITY TO VERIFY THE LOCATION AND DEPTH OF ALL UTILITIES PRIOR TO COMMENCING ANY CONSTRUCTION ACTIVITIES.

TREE LISTING TABLE

#	DESC.
2214	12" FIR
2215	12" FIR
2216	12" FIR
2217	12" FIR
2218	12" FIR
2219	12" FIR
2220	12" FIR
2221	12" FIR

C=CONIFER, D=DECIDUOUS

SHEET INDEX
N.T.S.

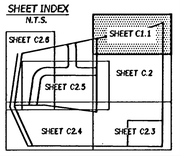

DESIGN GROUP
THE SAUNDERS COMPANY
901 N. Brutscher, Ste. 202
Newberg, Oregon 97132
Phone: 503-537-9347
www.thesaunderscompany.net

08/06/12
REGISTERED PROFESSIONAL LAND SURVEYOR
OREGON JULY 16, 1987 THEODORE G. LAMBERT 2294
EXPIRES: 12-31-2012

J.T. SMITH companies

Teresa's Vineyard
Public Improvements
Sub-07-02/NDW-07-02/VAR-07-01
West Linn, Oregon

REV	DATE	SUMMARY
1	8/5/11	Client/Agency Comme
	7/2/12	Add'l As Built
	1/27/12	As Built

Project #: 9130 Drawn: TGL

EXISTING CONDITIONS

Date: April 15, 2011

C 2.1

\\SERVER\Land Projects\9130\SURVEY\Drawings\9130-SURVEY-EXIST.dwg, 7/24/2012 9:35:33 AM, The Saunders Company

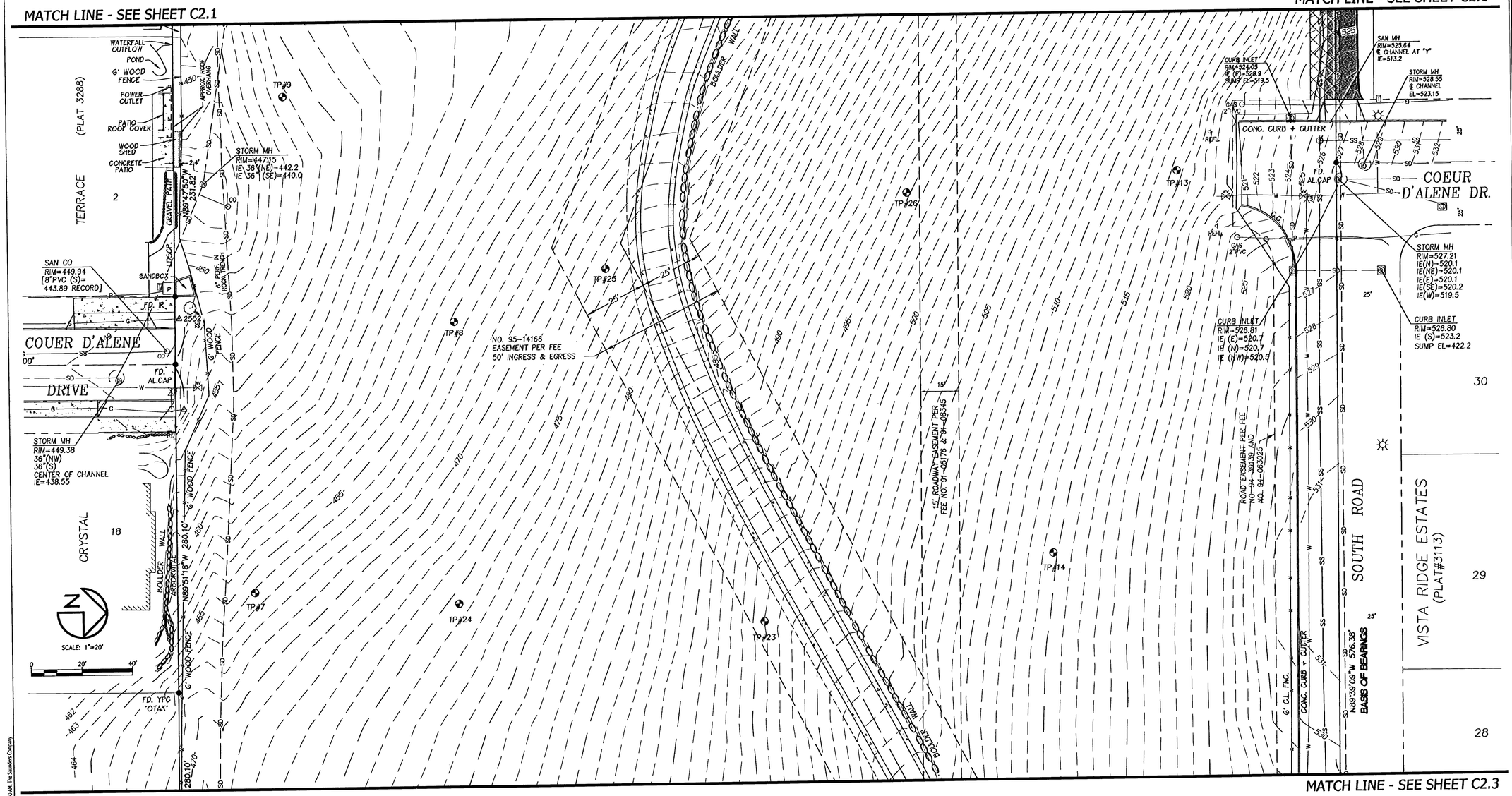

BENCHMARK

ELEVATIONS ARE BASED ON THE CITY OF WEST LINN BENCH MARK "B"

BENCH MARK "B" ELEV=667.22
LOCATED 93.5' EAST AND 17.0' SOUTH OF THE EDGE OF PAVEMENT FROM THE 5-WAY INTERSECTION OF ROSEMONT AND SANTA ANA, SAID BENCHMARK BEING A 3" CAP ON A PIPE WITH YELLOW WATERWORKS LID PER FIELD TIE TO THE AS-BUILT RIM ELEVATION OF THE SANITARY SEWER MANHOLE LOCATED AT THE INTERSECTION OF SOUTH ROAD AND COUER D'ALENE DRIVE AS SHOWN ON THE CITY AS-BUILTS FOR VISTA RIDHE (MANHOLE RIM ELEV=525.64).

UTILITY STATEMENT

UTILITY LOCATIONS ARE SHOWN BASED ON FIELD LOCATIONS OF EXISTING FACILITIES, AS-BUILT DRAWINGS AND RECORD INFORMATION, AND LOCATES OF UNDERGROUND UTILITIES BY CALL-B-4-U-DIG. IT IS THE CONTRACTORS RESPONSIBILITY TO VERIFY THE LOCATION AND DEPTH OF ALL UTILITIES PRIOR TO COMMENCING ANY CONSTRUCTION ACTIVITIES.

TREE LISTING TABLE

#	DESC.
2552	OAK-38"

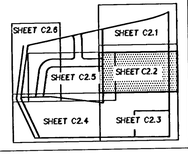

THE SAUNDERS COMPANY
DESIGN GROUP
901 N. Brutscher, Ste. 202
Newberg, Oregon 97132
Phone: 503-537-9347
www.thesaunderscompany.net

08/06/12
REGISTERED PROFESSIONAL LAND SURVEYOR
OREGON
JULY 16, 1987
THEODORE G. LAMBERT
2294
EXPIRES: 12-31-2012

J.T. SMITH companies

Teresa's Vineyard
Public Improvements
Sub-07-02/NDW-07-02/VAR-07-01
West Linn, Oregon

REV	DATE	SUMMARY
1	8/5/11	Client/Agency Comme
	7/2/12	Add'l As Built
	1/27/12	As Built

Project #: 9130 Drawn: TGL

EXISTING CONDITIONS

Date: April 15, 2011

C 2.2

\\SERVER\Land Projects\9130\SURVEY\Drawings\9130-SURVEY-EXIST.dwg, 7/24/2012 9:35:40 AM, The Saunders Company

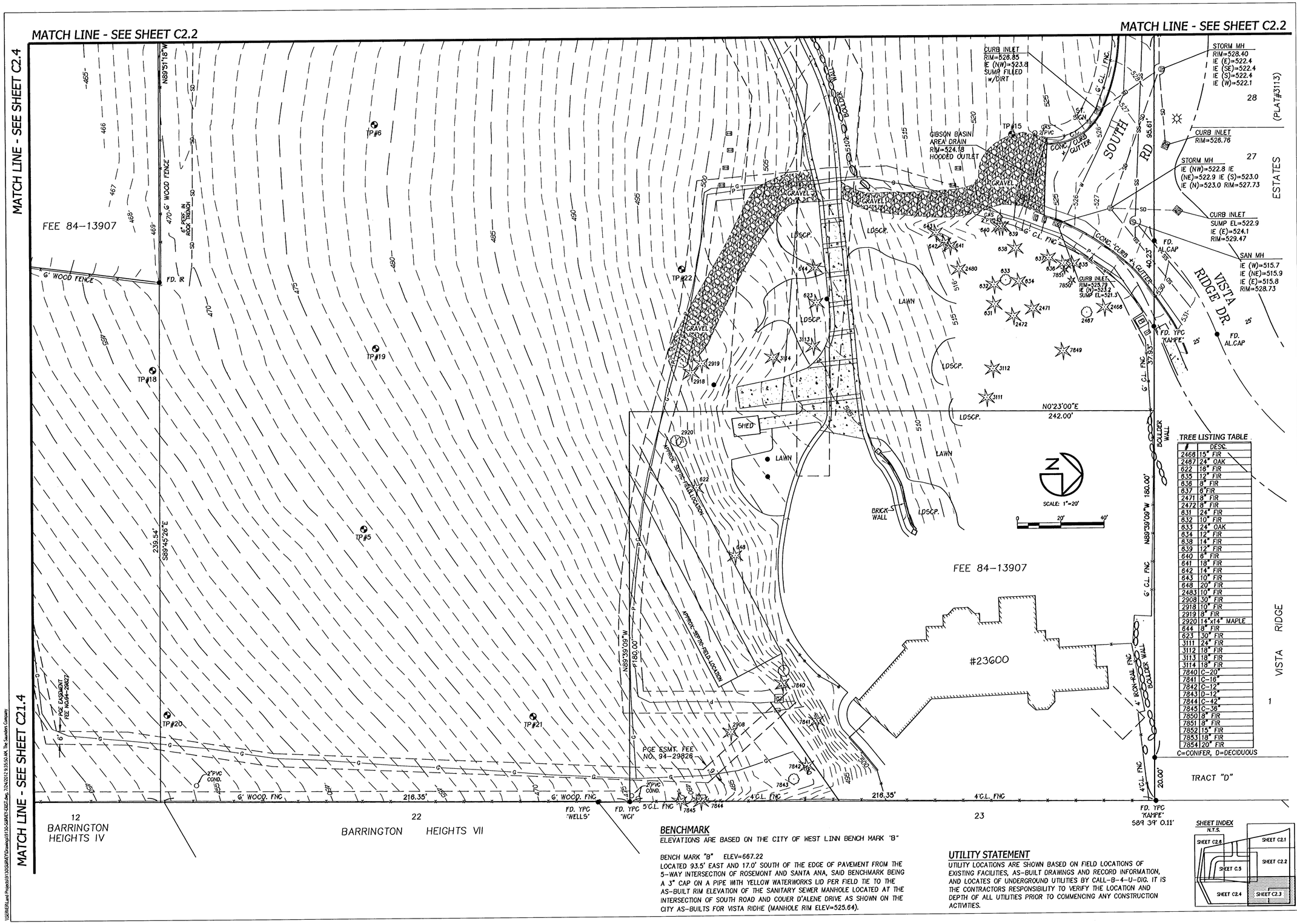

TREE LISTING TABLE

#	DESC.
2466	15" FIR
2467	24" OAK
622	18" FIR
635	12" FIR
636	8" FIR
637	6"FIR
2471	8" FIR
2472	8" FIR
631	24" FIR
632	10" FIR
633	24" OAK
634	12" FIR
638	14" FIR
639	12" FIR
640	6" FIR
641	18" FIR
642	14" FIR
643	10" FIR
648	20" FIR
2483	10" FIR
2908	30" FIR
2918	10" FIR
2919	8" FIR
2920	14"x14" MAPLE
644	8" FIR
623	30" FIR
3111	24" FIR
3112	18" FIR
3113	18" FIR
3114	18" FIR
7840	C-20"
7841	C-16"
7842	C-12"
7843	D-12"
7844	C-42"
7845	C-36"
7850	8" FIR
7851	8" FIR
7852	15" FIR
7853	18" FIR
7854	20" FIR

C=CONIFER, D=DECIDUOUS

BENCHMARK

ELEVATIONS ARE BASED ON THE CITY OF WEST LINN BENCH MARK "B"

BENCH MARK "B" ELEV=667.22
LOCATED 93.5' EAST AND 17.0' SOUTH OF THE EDGE OF PAVEMENT FROM THE 5-WAY INTERSECTION OF ROSEMONT AND SANTA ANA, SAID BENCHMARK BEING A 3" CAP ON A PIPE WITH YELLOW WATERWORKS LID PER FIELD TIE TO THE AS-BUILT RIM ELEVATION OF THE SANITARY SEWER MANHOLE LOCATED AT THE INTERSECTION OF SOUTH ROAD AND COUER D'ALENE DRIVE AS SHOWN ON THE CITY AS-BUILTS FOR VISTA RIDHE (MANHOLE RIM ELEV=525.64).

UTILITY STATEMENT

UTILITY LOCATIONS ARE SHOWN BASED ON FIELD LOCATIONS OF EXISTING FACILITIES, AS-BUILT DRAWINGS AND RECORD INFORMATION, AND LOCATES OF UNDERGROUND UTILITIES BY CALL-B-4-U-DIG. IT IS THE CONTRACTORS RESPONSIBILITY TO VERIFY THE LOCATION AND DEPTH OF ALL UTILITIES PRIOR TO COMMENCING ANY CONSTRUCTION ACTIVITIES.

SHEET INDEX
N.T.S.

THE SAUNDERS COMPANY
DESIGN GROUP
901 N. Brutscher, Ste. 202
Newberg, Oregon 97132
Phone: 503-537-9347
www.thesaunderscompany.net

08/06/12
REGISTERED PROFESSIONAL LAND SURVEYOR
OREGON JULY 16, 1987 THEODORE G. LAMBERT 2294
EXPIRES: 12-31-2012

J.T. SMITH companies

Teresa's Vineyard
Public Improvements
Sub-07-02/NDW-07-02/VAR-07-01
West Linn, Oregon

REV	DATE	SUMMARY
1	8/5/11	Client/Agency Comme
	7/2/12	Add'l As Built
	1/27/12	As Built

Project #: 9130 Drawn: TGL

EXISTING CONDITIONS

Date: April 15, 2011

C 2.3

\\SERVER\Land Projects\9130\SURVEY\Drawings\9130-SURVEY.DWG\Tue, 7/24/2012-9:35:50 AM, The Saunders Company

BENCHMARK

ELEVATIONS ARE BASED ON THE CITY OF WEST LINN BENCH MARK "B"

BENCH MARK "B" ELEV=667.22
LOCATED 93.5' EAST AND 17.0' SOUTH OF THE EDGE OF PAVEMENT FROM THE 5-WAY INTERSECTION OF ROSEMONT AND SANTA ANA, SAID BENCHMARK BEING A 3" CAP ON A PIPE WITH YELLOW WATERWORKS LID PER FIELD TIE TO THE AS-BUILT RIM ELEVATION OF THE SANITARY SEWER MANHOLE LOCATED AT THE INTERSECTION OF SOUTH ROAD AND COUER D'ALENE DRIVE AS SHOWN ON THE CITY AS-BUILTS FOR VISTA RIDHE (MANHOLE RIM ELEV=525.64).

UTILITY STATEMENT

UTILITY LOCATIONS ARE SHOWN BASED ON FIELD LOCATIONS OF EXISTING FACILITIES, AS-BUILT DRAWINGS AND RECORD INFORMATION, AND LOCATES OF UNDERGROUND UTILITIES BY CALL-B-4-U-DIG. IT IS THE CONTRACTORS RESPONSIBILITY TO VERIFY THE LOCATION AND DEPTH OF ALL UTILITIES PRIOR TO COMMENCING ANY CONSTRUCTION ACTIVITIES.

TREE LISTING TABLE

#	DESC.	#	DESC.
7811	D-3x6",2x8"	7820	C-6"
7812	C-15"	7821	C-12"
7813	C-2x12"	7822	C-12"
7814	C-5"	7823	C-18"
7815	C-20"	7824	C-12"
7816	C-5",4"	7825	C-12",26"
7817	C-10",12"	7846	40" FIR
7818	C-6"	7847	40" FIR
7819	C-15"	7848	34" FIR

C=CONIFER, D=DECIDUOUS

SHEET INDEX
N.T.S.

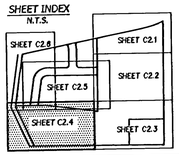

THE SAUNDERS COMPANY
DESIGN GROUP
901 N. Brutscher, Ste. 202
Newberg, Oregon 97132
Phone: 503-537-9347
www.thesaunderscompany.net

08/06/12
REGISTERED PROFESSIONAL LAND SURVEYOR
OREGON JULY 16, 1987 THEODORE G. LAMBERT 2294
EXPIRES: 12-31-2012

J.T. SMITH companies

Teresa's Vineyard
Public Improvements
Sub-07-02/NDW-07-02/VAR-07-01
West Linn, Oregon

REV	DATE	SUMMARY
1	8/5/11	Client/Agency Commen
	7/2/12	Add'l As Built
	1/27/12	As Built

Project #: 9130 Drawn: TGL

EXISTING CONDITIONS

Date: April 15, 2011

C 2.4

\\GDRIVE\Land Projects\9130-SURVEY\Drawings\9130-SURVEY-EXIST.dwg, 7/24/2012 9:36:01 AM, The Saunders Company

BENCHMARK

ELEVATIONS ARE BASED ON THE CITY OF WEST LINN BENCH MARK "B"

BENCH MARK "B" ELEV=667.22
LOCATED 93.5' EAST AND 17.0' SOUTH OF THE EDGE OF PAVEMENT FROM THE 5-WAY INTERSECTION OF ROSEMONT AND SANTA ANA, SAID BENCHMARK BEING A 3" CAP ON A PIPE WITH YELLOW WATERWORKS LID PER FIELD TIE TO THE AS-BUILT RIM ELEVATION OF THE SANITARY SEWER MANHOLE LOCATED AT THE INTERSECTION OF SOUTH ROAD AND COUER D'ALENE DRIVE AS SHOWN ON THE CITY AS-BUILTS FOR VISTA RIDHE (MANHOLE RIM ELEV=525.64).

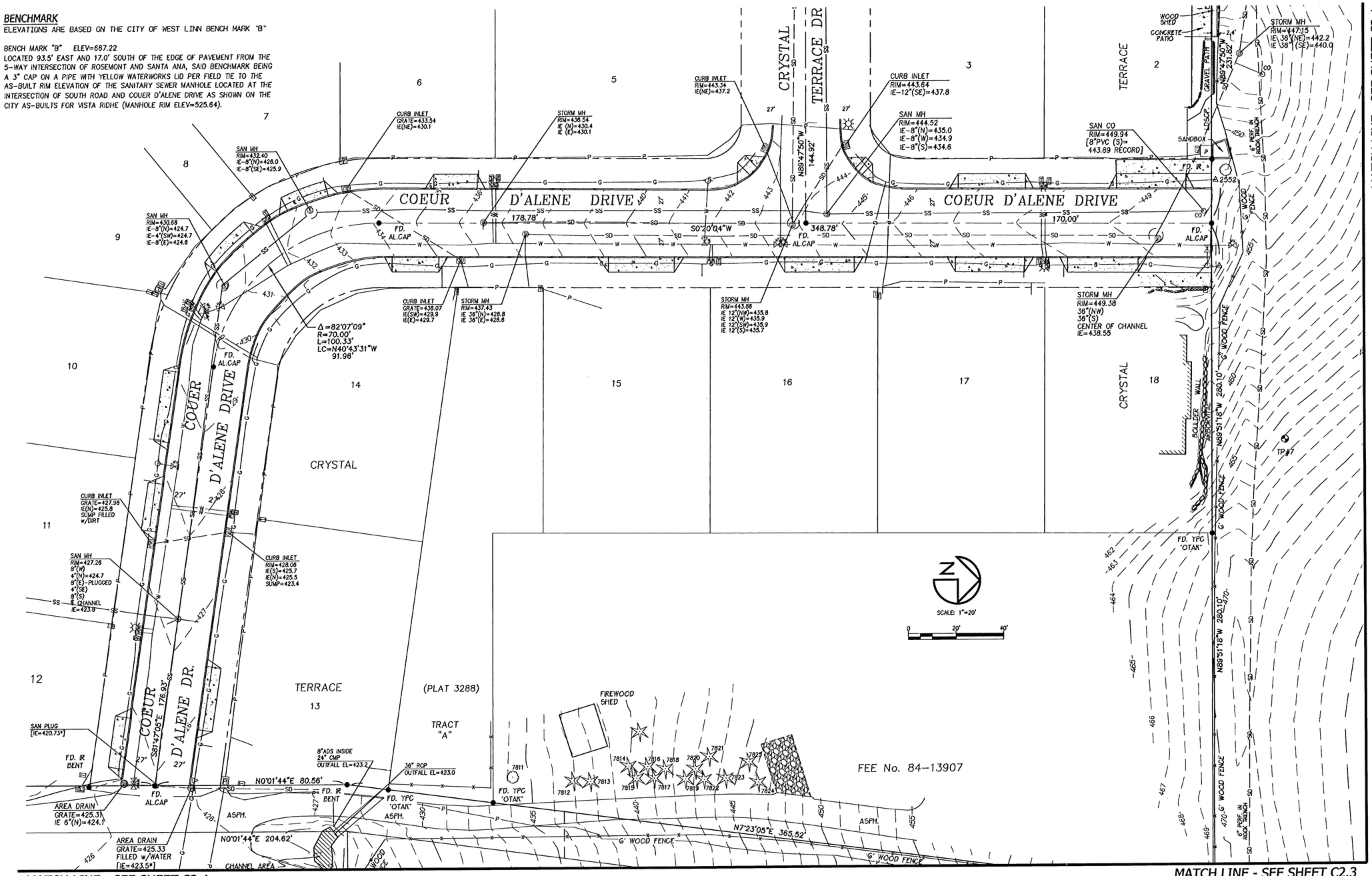

UTILITY STATEMENT

UTILITY LOCATIONS ARE SHOWN BASED ON FIELD LOCATIONS OF EXISTING FACILITIES, AS-BUILT DRAWINGS AND RECORD INFORMATION, AND LOCATES OF UNDERGROUND UTILITIES BY CALL-B-4-U-DIG. IT IS THE CONTRACTORS RESPONSIBILITY TO VERIFY THE LOCATION AND DEPTH OF ALL UTILITIES PRIOR TO COMMENCING ANY CONSTRUCTION ACTIVITIES.

TREE LISTING TABLE

#	DESC.	#	DESC.
2552	OAK-38"	7819	C-15"
7811	D-3x6",2x8"	7820	C-8"
7812	C-15"	7821	C-12"
7813	C-2x12"	7822	C-12"
7814	C-5"	7823	C-16"
7815	C-20"	7824	C-12"
7816	C-5",4"	7825	C-12",26"
7817	C-10",12"		
7818	C-6"		

C=CONIFER, D=DECIDUOUS

SHEET INDEX
N.T.S.

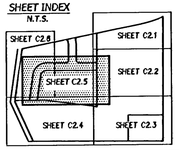

DESIGN GROUP
THE SAUNDERS COMPANY
901 N. Brutscher, Ste. 202
Newberg, Oregon 97132
Phone: 503-537-9347
www.thesaunderscompany.net

08/16/12
REGISTERED PROFESSIONAL LAND SURVEYOR
OREGON JULY 16, 1987 THEODORE G. LAMBERT 2294
EXPIRES: 12-31-2012

J.T. SMITH companies

Teresa's Vineyard
Public Improvements
Sub-07-02/NDW-07-02/VAR-07-01
West Linn, Oregon

REV	DATE	SUMMARY
1	8/5/11	Client/Agency Commer
	7/2/12	Add'l As Built
	1/27/12	As Built

Project #: 9130 Drawn: TGL

EXISTING CONDITIONS

Date: April 15, 2011

C 2.5

\\GENVR\Land Projects\9130\SURVEY\Drawings\9130-SURVEY-DIST.dwg, 7/24/2012 9:36:11 AM, The Saunders Company

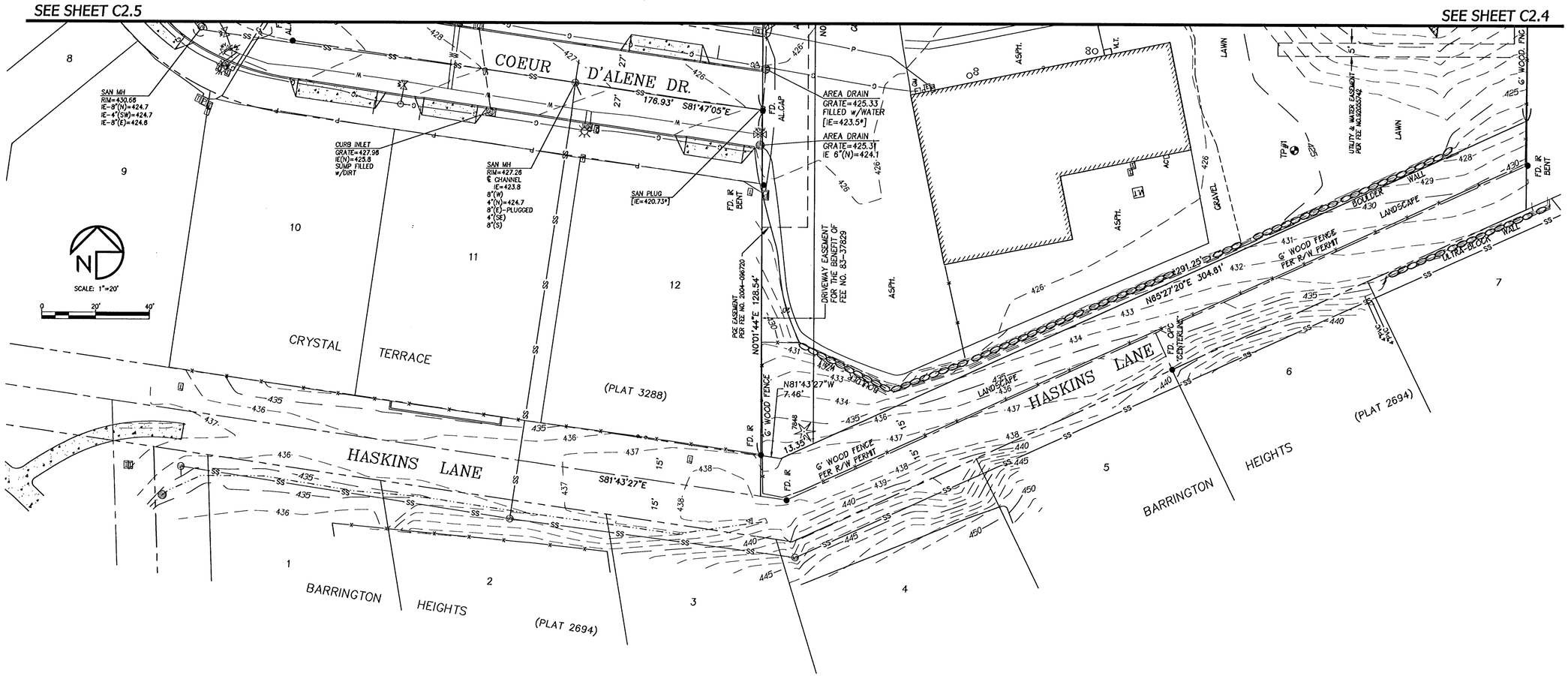

BENCHMARK

ELEVATIONS ARE BASED ON THE CITY OF WEST LINN BENCH MARK "B"

BENCH MARK "B" ELEV=667.22
LOCATED 93.5' EAST AND 17.0' SOUTH OF THE EDGE OF PAVEMENT FROM THE 5-WAY INTERSECTION OF ROSEMONT AND SANTA ANA, SAID BENCHMARK BEING A 3" CAP ON A PIPE WITH YELLOW WATERWORKS LID PER FIELD TIE TO THE AS-BUILT RIM ELEVATION OF THE SANITARY SEWER MANHOLE LOCATED AT THE INTERSECTION OF SOUTH ROAD AND COUER D'ALENE DRIVE AS SHOWN ON THE CITY AS-BUILTS FOR VISTA RIDHE (MANHOLE RIM ELEV=525.64).

UTILITY STATEMENT

UTILITY LOCATIONS ARE SHOWN BASED ON FIELD LOCATIONS OF EXISTING FACILITIES, AS-BUILT DRAWINGS AND RECORD INFORMATION, AND LOCATES OF UNDERGROUND UTILITIES BY CALL-B-4-U-DIG. IT IS THE CONTRACTORS RESPONSIBILITY TO VERIFY THE LOCATION AND DEPTH OF ALL UTILITIES PRIOR TO COMMENCING ANY CONSTRUCTION ACTIVITIES.

TREE LISTING TABLE

#	DESC.
7848	34" FIR

SHEET INDEX
N.T.S.

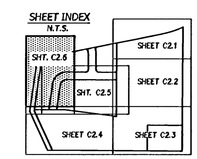

DESIGN GROUP
THE SAUNDERS COMPANY
901 N. Brutscher, Ste. 202
Newberg, Oregon 97132
Phone: 503-537-9347
www.thesaunderscompany.net

07/06/12
REGISTERED PROFESSIONAL LAND SURVEYOR
OREGON
JULY 16, 1987
THEODORE G. LAMBERT
2294
EXPIRES: 12-31-2012

J.T. SMITH companies

Teresa's Vineyard
Public Improvements
Sub-07-02/NDW-07-02/VAR-07-01
West Linn, Oregon

REV	DATE	SUMMARY
1	8/5/11	Client/Agency Comme
	7/2/12	Add'l As Built
	1/27/12	As Built

Project #: 9130 Drawn: TGL

EXISTING CONDITIONS

Date: April 15, 2011

C 2.6

\\GSERVER\Land Projects\9130\SURVEY\Drawings\9130-SURVEY-EXIST.dwg, 7/24/2012 9:36:00 AM, The Saunders Company

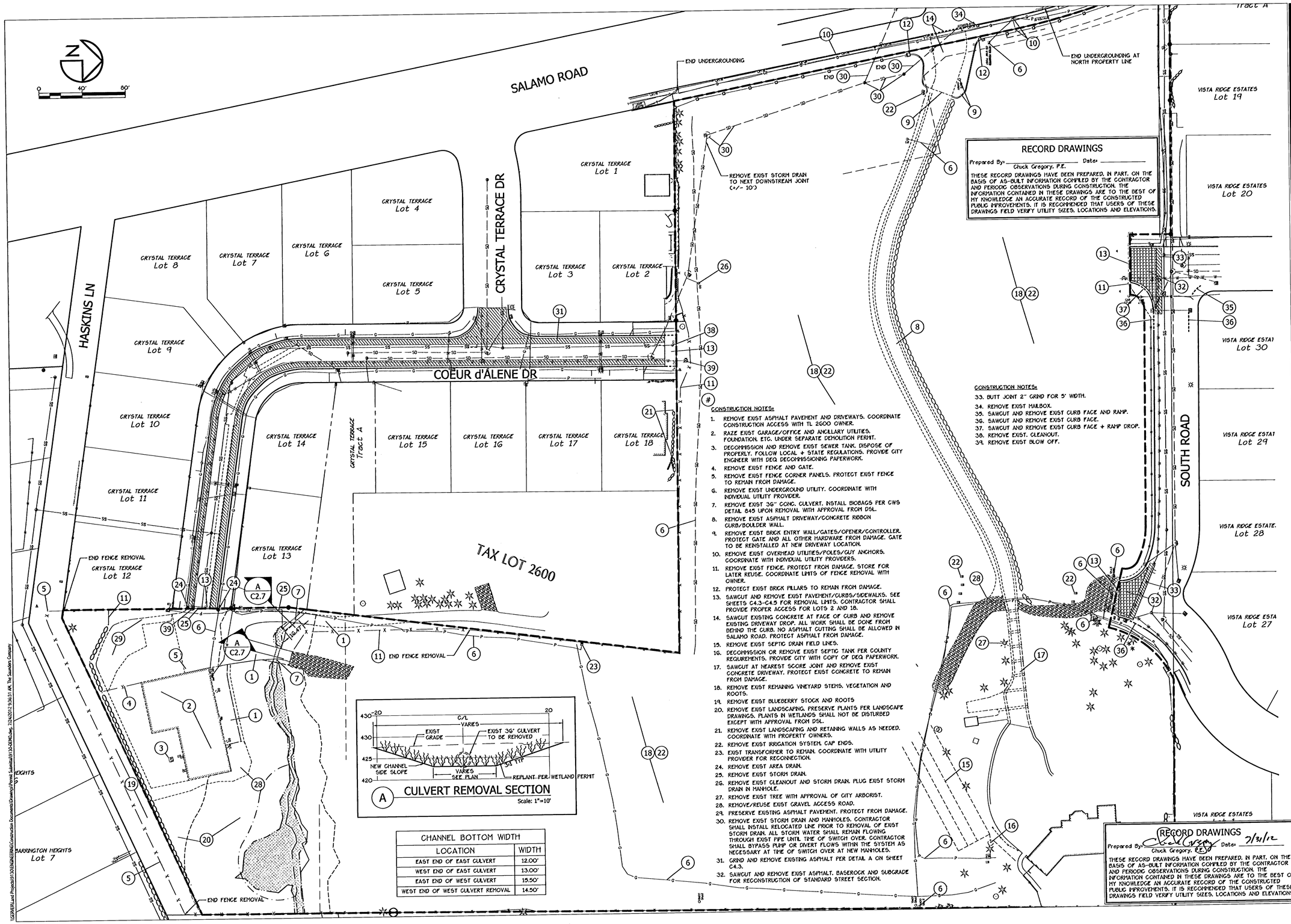

CONSTRUCTION NOTES:

1. REMOVE EXIST ASPHALT PAVEMENT AND DRIVEWAYS. COORDINATE CONSTRUCTION ACCESS WITH TL 2600 OWNER.
2. RAZE EXIST GARAGE/OFFICE AND ANCILLARY UTILITIES, FOUNDATION, ETC. UNDER SEPARATE DEMOLITION PERMIT.
3. DECOMMISSION AND REMOVE EXIST SEWER TANK. DISPOSE OF PROPERLY. FOLLOW LOCAL + STATE REGULATIONS. PROVIDE CITY ENGINEER WITH DEQ DECOMMISSIONING PAPERWORK.
4. REMOVE EXIST FENCE AND GATE.
5. REMOVE EXIST FENCE CORNER PANELS. PROTECT EXIST FENCE TO REMAIN FROM DAMAGE.
6. REMOVE EXIST UNDERGROUND UTILITY. COORDINATE WITH INDIVIDUAL UTILITY PROVIDER.
7. REMOVE EXIST 36" CONC. CULVERT. INSTALL BIOBAGS PER CWS DETAIL 845 UPON REMOVAL WITH APPROVAL FROM DSL.
8. REMOVE EXIST ASPHALT DRIVEWAY/CONCRETE RIBBON CURB/BOULDER WALL.
9. REMOVE EXIST BRICK ENTRY WALL/GATES/OPENER/CONTROLLER. PROTECT GATE AND ALL OTHER HARDWARE FROM DAMAGE. GATE TO BE REINSTALLED AT NEW DRIVEWAY LOCATION.
10. REMOVE EXIST OVERHEAD UTILITIES/POLES/GUY ANCHORS. COORDINATE WITH INDIVIDUAL UTILITY PROVIDERS.
11. REMOVE EXIST FENCE. PROTECT FROM DAMAGE. STORE FOR LATER REUSE. COORDINATE LIMITS OF FENCE REMOVAL WITH OWNER.
12. PROTECT EXIST BRICK PILLARS TO REMAIN FROM DAMAGE.
13. SAWCUT AND REMOVE EXIST PAVEMENT/CURBS/SIDEWALKS. SEE SHEETS C4.3-C4.8 FOR REMOVAL LIMITS. CONTRACTOR SHALL PROVIDE PROPER ACCESS FOR LOTS 2 AND 18.
14. SAWCUT EXISTING CONCRETE AT FACE OF CURB AND REMOVE EXISTING DRIVEWAY DROP. ALL WORK SHALL BE DONE FROM BEHIND THE CURB. NO ASPHALT CUTTING SHALL BE ALLOWED IN SALAMO ROAD. PROTECT ASPHALT FROM DAMAGE.
15. REMOVE EXIST SEPTIC DRAIN FIELD LINES.
16. DECOMMISSION OR REMOVE EXIST SEPTIC TANK PER COUNTY REQUIREMENTS. PROVIDE CITY WITH COPY OF DEQ PAPERWORK.
17. SAWCUT AT NEAREST SCORE JOINT AND REMOVE EXIST CONCRETE DRIVEWAY. PROTECT EXIST CONCRETE TO REMAIN FROM DAMAGE.
18. REMOVE EXIST REMAINING VINEYARD STEMS, VEGETATION AND ROOTS.
19. REMOVE EXIST BLUEBERRY STOCK AND ROOTS
20. REMOVE EXIST LANDSCAPING. PRESERVE PLANTS PER LANDSCAPE DRAWINGS. PLANTS IN WETLANDS SHALL NOT BE DISTURBED EXCEPT WITH APPROVAL FROM DSL.
21. REMOVE EXIST LANDSCAPING AND RETAINING WALLS AS NEEDED. COORDINATE WITH PROPERTY OWNERS.
22. REMOVE EXIST IRRIGATION SYSTEM. CAP ENDS.
23. EXIST TRANSFORMER TO REMAIN. COORDINATE WITH UTILITY PROVIDER FOR RECONNECTION.
24. REMOVE EXIST AREA DRAIN.
25. REMOVE EXIST STORM DRAIN.
26. REMOVE EXIST CLEANOUT AND STORM DRAIN. PLUG EXIST STORM DRAIN IN MANHOLE.
27. REMOVE EXIST TREE WITH APPROVAL OF CITY ARBORIST.
28. REMOVE/REUSE EXIST GRAVEL ACCESS ROAD.
29. PRESERVE EXISTING ASPHALT PAVEMENT. PROTECT FROM DAMAGE.
30. REMOVE EXIST STORM DRAIN AND MANHOLES. CONTRACTOR SHALL INSTALL RELOCATED LINE PRIOR TO REMOVAL OF EXIST STORM DRAIN. ALL STORM WATER SHALL REMAIN FLOWING THROUGH EXIST PIPE UNTIL TIME OF SWITCH OVER. CONTRACTOR SHALL BYPASS PUMP OR DIVERT FLOWS WITHIN THE SYSTEM AS NECESSARY AT TIME OF SWITCH OVER AT NEW MANHOLES.
31. GRIND AND REMOVE EXISTING ASPHALT PER DETAIL A ON SHEET C4.3.
32. SAWCUT AND REMOVE EXIST ASPHALT, BASEROCK AND SUBGRADE FOR RECONSTRUCTION OF STANDARD STREET SECTION.
33. BUTT JOINT 2" GRIND FOR 5' WIDTH.
34. REMOVE EXIST MAILBOX.
35. SAWCUT AND REMOVE EXIST CURB FACE AND RAMP.
36. SAWCUT AND REMOVE EXIST CURB FACE.
37. SAWCUT AND REMOVE EXIST CURB FACE + RAMP DROP.
38. REMOVE EXIST. CLEANOUT.
39. REMOVE EXIST BLOW OFF.

CHANNEL BOTTOM WIDTH	
LOCATION	WIDTH
EAST END OF EAST CULVERT	12.00'
WEST END OF EAST CULVERT	13.00'
EAST END OF WEST CULVERT	15.50'
WEST END OF WEST CULVERT REMOVAL	14.50'

THE SAUNDERS COMPANY
DESIGN GROUP
901 N. Brutscher, Ste. 202
Newberg, Oregon 97132
Phone: 503-537-9347
www.thesaunderscompany.net

7/31/12
REGISTERED PROFESSIONAL ENGINEER
SIGNATURE
OREGON
SEPT. 14, 1989
CHARLES EDWARD GREGORY
RENEWS: JUNE 30, 2013

J.T. SMITH companies

Teresa's Vineyard
Public Improvements
Sub-07-02/NDW-07-02/VAR-07-01
West Linn, Oregon

REV	DATE	SUMMARY
1	8/5/11	Client/Agency Comments
2	8/30/11	Agency Comments
	7/2/12	Add'l As Built
	1/27/12	As Built

Project #: 9130 Drawn: CEG

DEMOLITION PLAN

Date: April 15, 2011

C2.7

RECORD DRAWINGS
Prepared By: Chuck Gregory, P.E. Date: 7/31/12
THESE RECORD DRAWINGS HAVE BEEN PREPARED, IN PART, ON THE BASIS OF AS-BUILT INFORMATION COMPILED BY THE CONTRACTOR AND PERIODIC OBSERVATIONS DURING CONSTRUCTION. THE INFORMATION CONTAINED IN THESE DRAWINGS ARE TO THE BEST OF MY KNOWLEDGE AN ACCURATE RECORD OF THE CONSTRUCTED PUBLIC IMPROVEMENTS. IT IS RECOMMENDED THAT USERS OF THESE DRAWINGS FIELD VERIFY UTILITY SIZES, LOCATIONS AND ELEVATIONS.

EROSION CONTROL LEGEND

- SEDIMENT CONTROL FENCING
- INLET PROTECTION FOR COMBINATION INLETS
- INLET PROTECTION FOR AREA DRAIN (SILT SAC INSERT)
- CONCRETE WASH-OUT AREA
- CONSTRUCTION ENTRANCE
- CHANNEL MATTING
- SURFACE ROUGHENING CAT TRACKING
- STRAW MULCHING
- OUTFALL/RIP-RAP PROTECTION

NOTES:
1. SEE SHEETS C3.2 - C3.4 FOR DETAILED EROSION CONTROL PLANS.
2. HYDROSEED ALL EXPOSED AREAS PER CWS EROSION CONTROL MANUAL GUIDELINES.

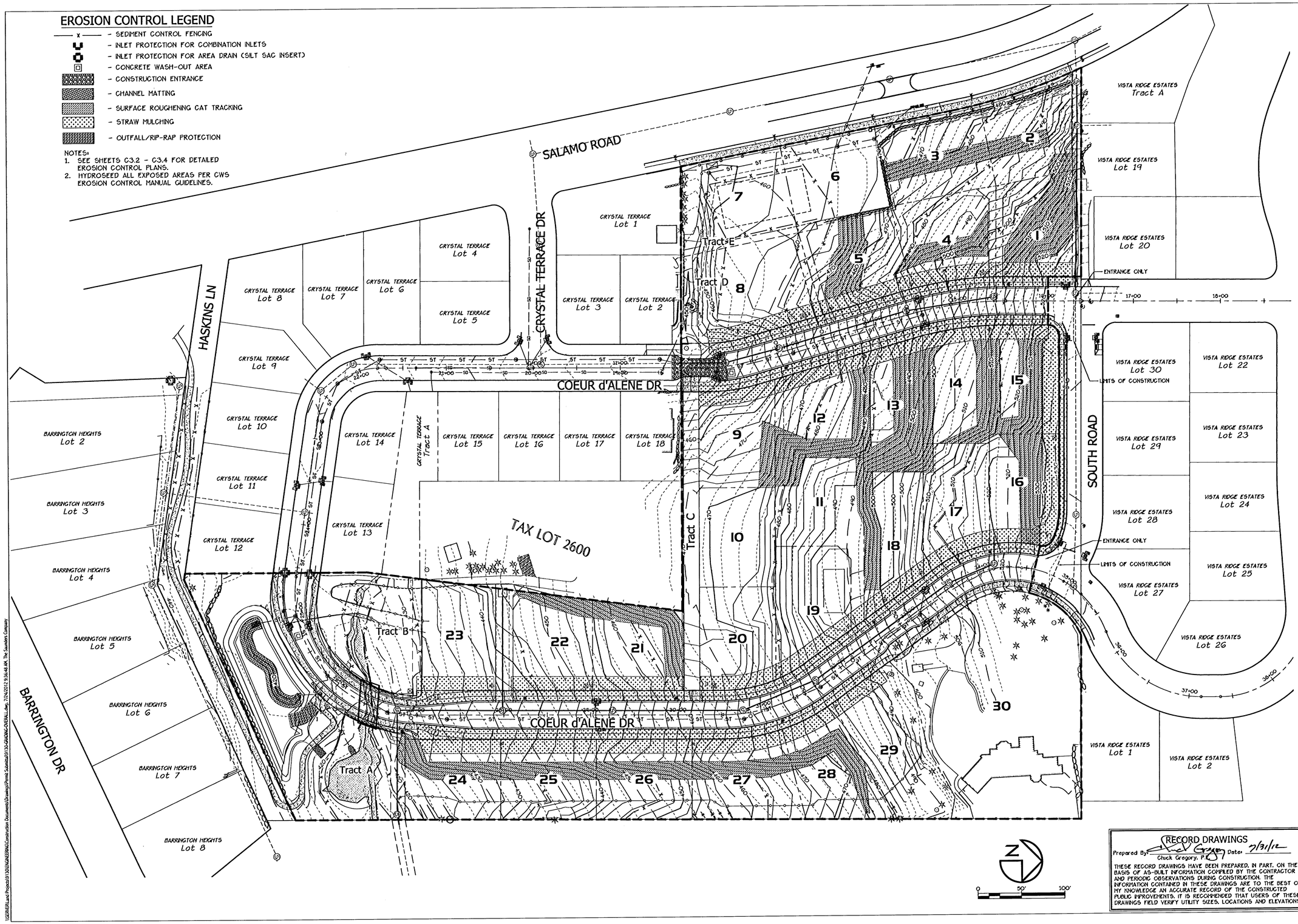

RECORD DRAWINGS
Prepared By: Chuck Gregory, P.E. Date: 7/31/12
THESE RECORD DRAWINGS HAVE BEEN PREPARED, IN PART, ON THE BASIS OF AS-BUILT INFORMATION COMPILED BY THE CONTRACTOR AND PERIODIC OBSERVATIONS DURING CONSTRUCTION. THE INFORMATION CONTAINED IN THESE DRAWINGS ARE TO THE BEST OF MY KNOWLEDGE AN ACCURATE RECORD OF THE CONSTRUCTED PUBLIC IMPROVEMENTS. IT IS RECOMMENDED THAT USERS OF THESE DRAWINGS FIELD VERIFY UTILITY SIZES, LOCATIONS AND ELEVATIONS.

THE SAUNDERS COMPANY
DESIGN GROUP
901 N. Brutscher, Ste. 202
Newberg, Oregon 97132
Phone: 503-537-9347
www.thesaunderscompany.net

7/31/12
REGISTERED PROFESSIONAL ENGINEER 58644PE OREGON SEPT. 14, 1999 CHARLES EDWARD GREGORY
RENEWS: JUNE 30, 2013

J.T. SMITH companies

Teresa's Vineyard
Public Improvements
Sub-07-02/NDW-07-02/VAR-07-01
West Linn, Oregon

REV	DATE	SUMMARY
1	8/5/11	Client/Agency Comments
2	8/30/11	Agency Comments
3	10/6/11	Add Entrance Only
	7/2/12	Add'l As Built
	1/27/12	As Built

Project #: 9130 Drawn: CL

OVERALL GRADING PLAN & EROSION CONTROL LEGEND

Date: April 15, 2011

C3.1

\\USER\JOB\Jobs\Projects\9130\ENGINEERING\Construction Documents\Drawings\Permit Submittals\9130-GRADING-OVERALL.dwg, 7/24/2012 9:36:46 AM, The Saunders Company

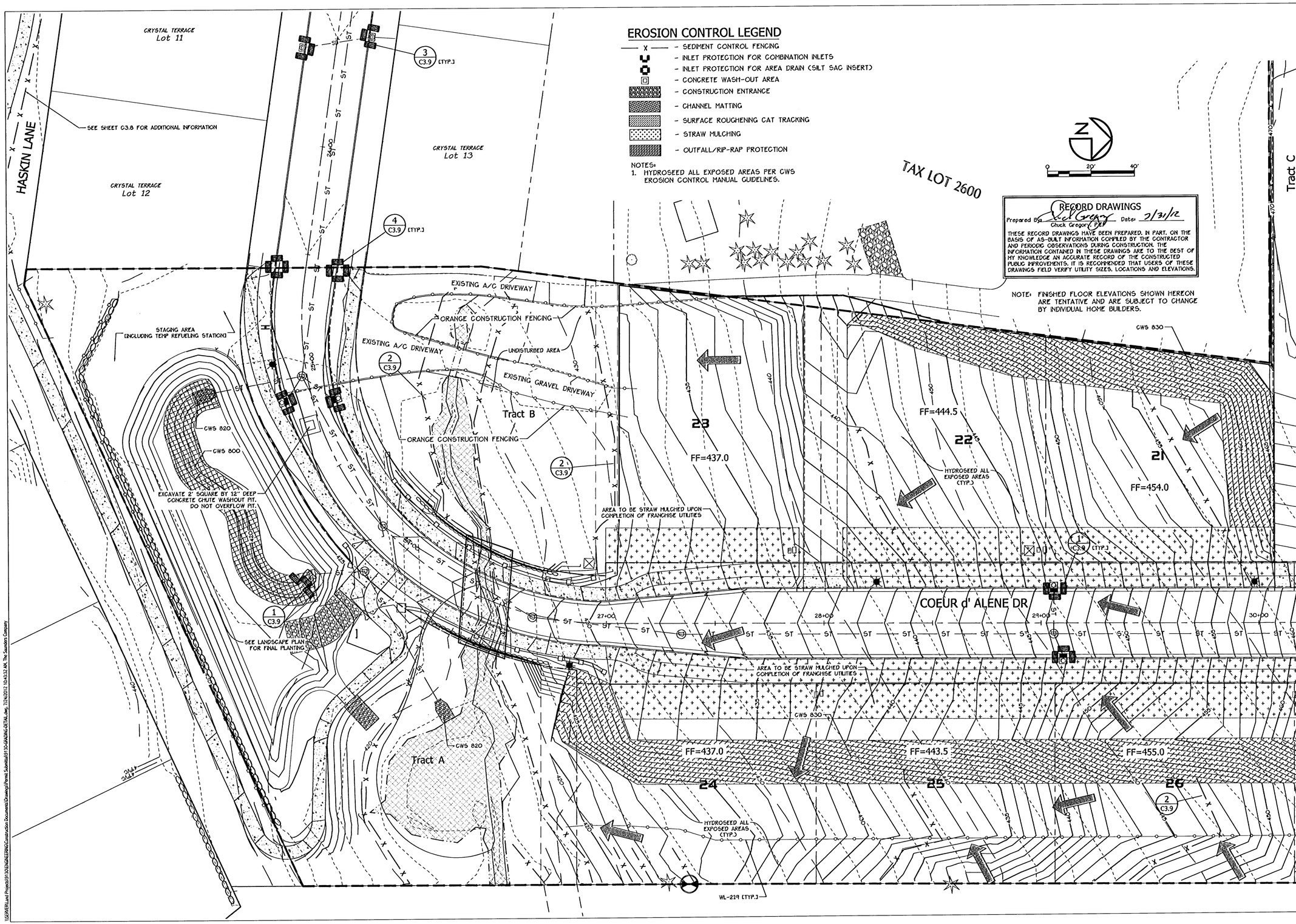

THE SAUNDERS COMPANY
DESIGN GROUP
901 N. Brutscher, Ste. 202
Newberg, Oregon 97132
Phone: 503-537-9347
www.thesaunderscompany.net

7/31/12
REGISTERED PROFESSIONAL ENGINEER 50644PE OREGON JULY 14, 1989 CHARLES EDWARD GREGORY
RENEWS: JUNE 30, 2013

J.T. SMITH companies

Teresa's Vineyard
Public Improvements
Sub-07-02/NDW-07-02/VAR-07-01
West Linn, Oregon

REV	DATE	SUMMARY
1	8/5/11	Client/Agency Comments
2	8/30/11	Agency Comments
	7/2/12	Add'l As Built
	1/27/12	As Built

Project #: 9130 Drawn: CL

GRADING AND EROSION CONTROL SE DETAIL PLAN

Date: April 15, 2011

C3.2

\\SERVER\Land Projects\9130\ENGINEERING\Construction Documents\Drawings\Permit Submittal\9130-GRADING-DETAIL.dwg, 7/24/2012 10:43:32 AM, The Saunders Company

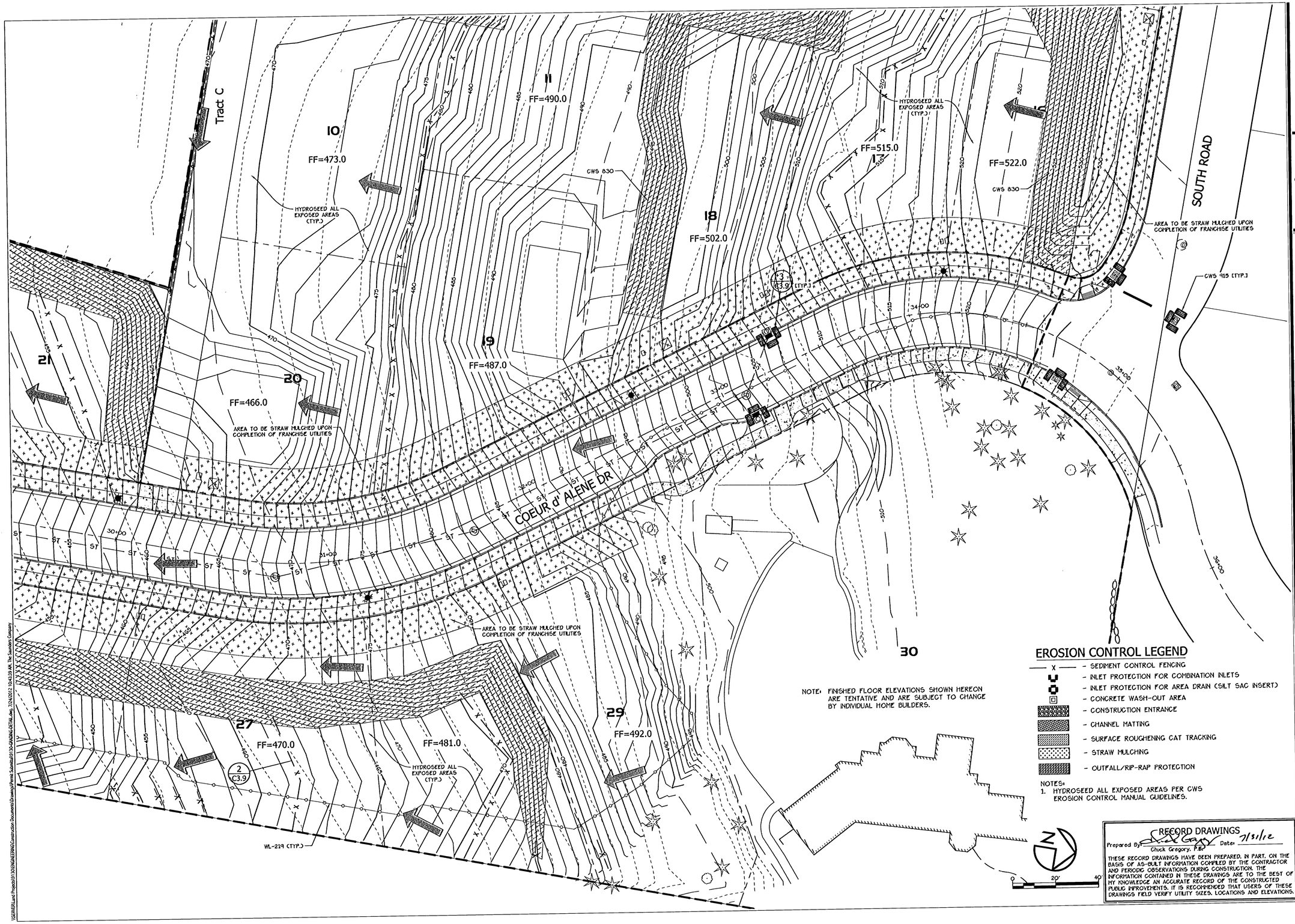

NOTE: FINISHED FLOOR ELEVATIONS SHOWN HEREON ARE TENTATIVE AND ARE SUBJECT TO CHANGE BY INDIVIDUAL HOME BUILDERS.

EROSION CONTROL LEGEND

- SEDIMENT CONTROL FENCING
- INLET PROTECTION FOR COMBINATION INLETS
- INLET PROTECTION FOR AREA DRAIN (SILT SAC INSERT)
- CONCRETE WASH-OUT AREA
- CONSTRUCTION ENTRANCE
- CHANNEL MATTING
- SURFACE ROUGHENING CAT TRACKING
- STRAW MULCHING
- OUTFALL/RIP-RAP PROTECTION

NOTES:
1. HYDROSEED ALL EXPOSED AREAS PER CWS EROSION CONTROL MANUAL GUIDELINES.

RECORD DRAWINGS
Prepared By: Chuck Gregory, P.E. Date: 7/31/12
THESE RECORD DRAWINGS HAVE BEEN PREPARED, IN PART, ON THE BASIS OF AS-BUILT INFORMATION COMPILED BY THE CONTRACTOR AND PERIODIC OBSERVATIONS DURING CONSTRUCTION. THE INFORMATION CONTAINED IN THESE DRAWINGS ARE TO THE BEST OF MY KNOWLEDGE AN ACCURATE RECORD OF THE CONSTRUCTED PUBLIC IMPROVEMENTS. IT IS RECOMMENDED THAT USERS OF THESE DRAWINGS FIELD VERIFY UTILITY SIZES, LOCATIONS AND ELEVATIONS.

THE SAUNDERS COMPANY
DESIGN GROUP
901 N. Brutscher, Ste. 202
Newberg, Oregon 97132
Phone: 503-537-9347
www.thesaunderscompany.net

7/31/12
REGISTERED PROFESSIONAL ENGINEER 50644PE OREGON SEPT. 14, 1989 CHARLES EDWARD GREGORY
RENEWS: JUNE 30, 2013

J.T. SMITH companies

Teresa's Vineyard
Public Improvements
Sub-07-02/NDW-07-02/VAR-07-01
West Linn, Oregon

REV	DATE	SUMMARY
1	8/5/11	Client/Agency Comments
2	8/30/11	Agency Comments
	7/2/12	Add'l As Built
	1/27/12	As Built

Project #: 9130 Drawn: CL

GRADING AND EROSION CONTROL NE DETAIL PLAN

Date: April 15, 2011

C3.3

\\SERVER\Land Projects\9130\ENGINEERING\Construction Documents\Drawings\Permit Submittal\9130-GRADING-DETAIL.dwg - 7/24/2012, 10:45:39 AM, The Saunders Company

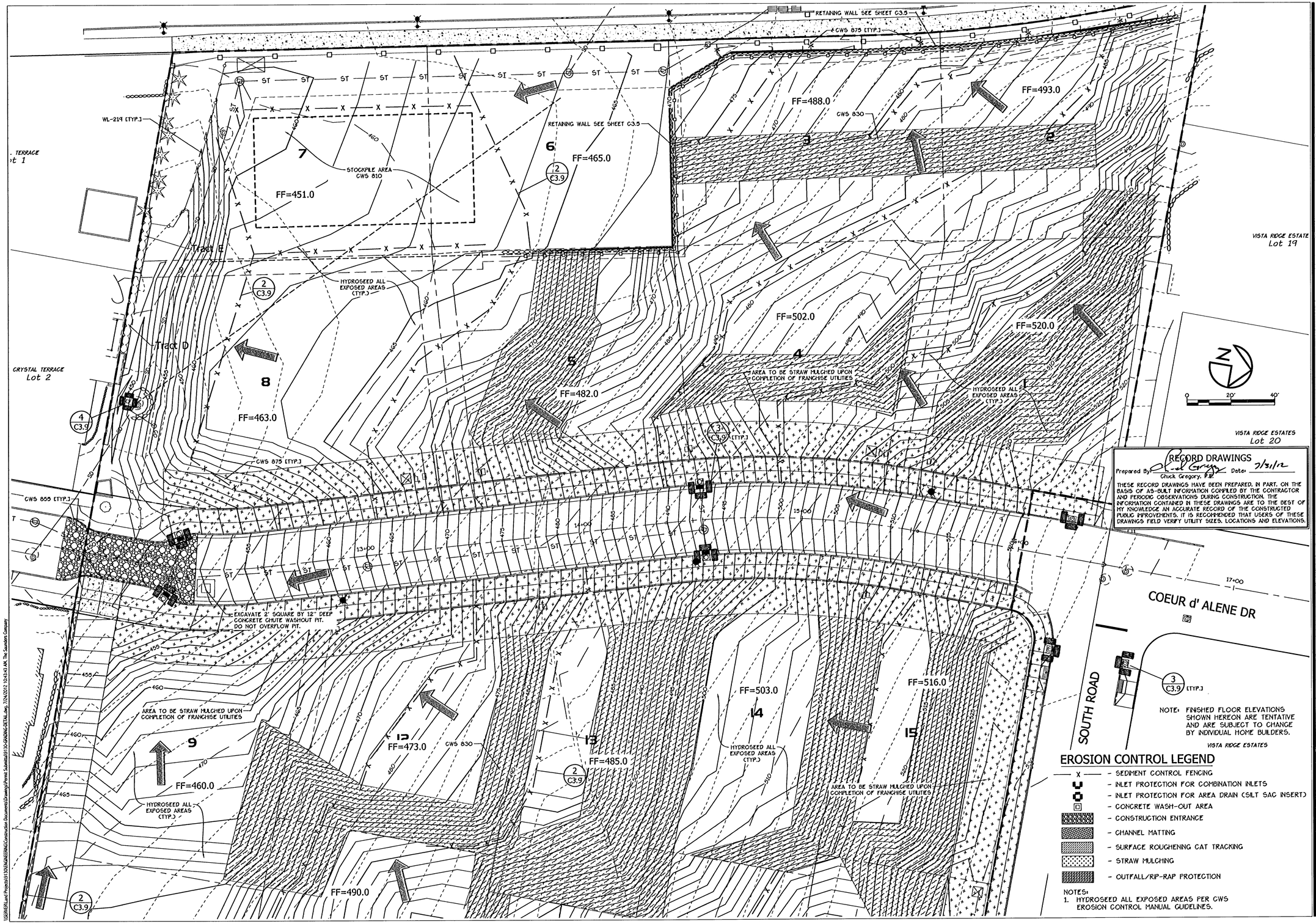

RECORD DRAWINGS
Prepared By: Chuck Gregory, P.E. Date: 7/31/12
THESE RECORD DRAWINGS HAVE BEEN PREPARED, IN PART, ON THE BASIS OF AS-BUILT INFORMATION COMPILED BY THE CONTRACTOR AND PERIODIC OBSERVATIONS DURING CONSTRUCTION. THE INFORMATION CONTAINED IN THESE DRAWINGS ARE TO THE BEST OF MY KNOWLEDGE AN ACCURATE RECORD OF THE CONSTRUCTED PUBLIC IMPROVEMENTS. IT IS RECOMMENDED THAT USERS OF THESE DRAWINGS FIELD VERIFY UTILITY SIZES, LOCATIONS AND ELEVATIONS.

THE SAUNDERS COMPANY
DESIGN GROUP
901 N. Brutscher, Ste. 202
Newberg, Oregon 97132
Phone: 503-537-9347
www.thesaunderscompany.net

7/31/12
REGISTERED PROFESSIONAL ENGINEER 10644PE OREGON SEPT. 14, 1999 CHARLES EDWARD GREGORY
RENEWS: JUNE 30, 2013

J.T. SMITH companies

Teresa's Vineyard
Public Improvements
Sub-07-02/NDW-07-02/VAR-07-01
West Linn, Oregon

REV	DATE	SUMMARY
1	8/5/11	Client/Agency Comments
2	8/30/11	Agency Comments
	7/2/12	Add'l As Built
	1/27/12	As Built

Project #: 9130 Drawn: CL

GRADING AND EROSION CONTROL NW DETAIL PLAN

Date: April 15, 2011

C3.4

\\SERVER\Land Projects\9130\DRAWINGS\Construction Documents\Drawings\Permit Submittal\9130-GRADING-DETAIL.dwg, 7/24/2012 10:43:40 AM, The Saunders Company

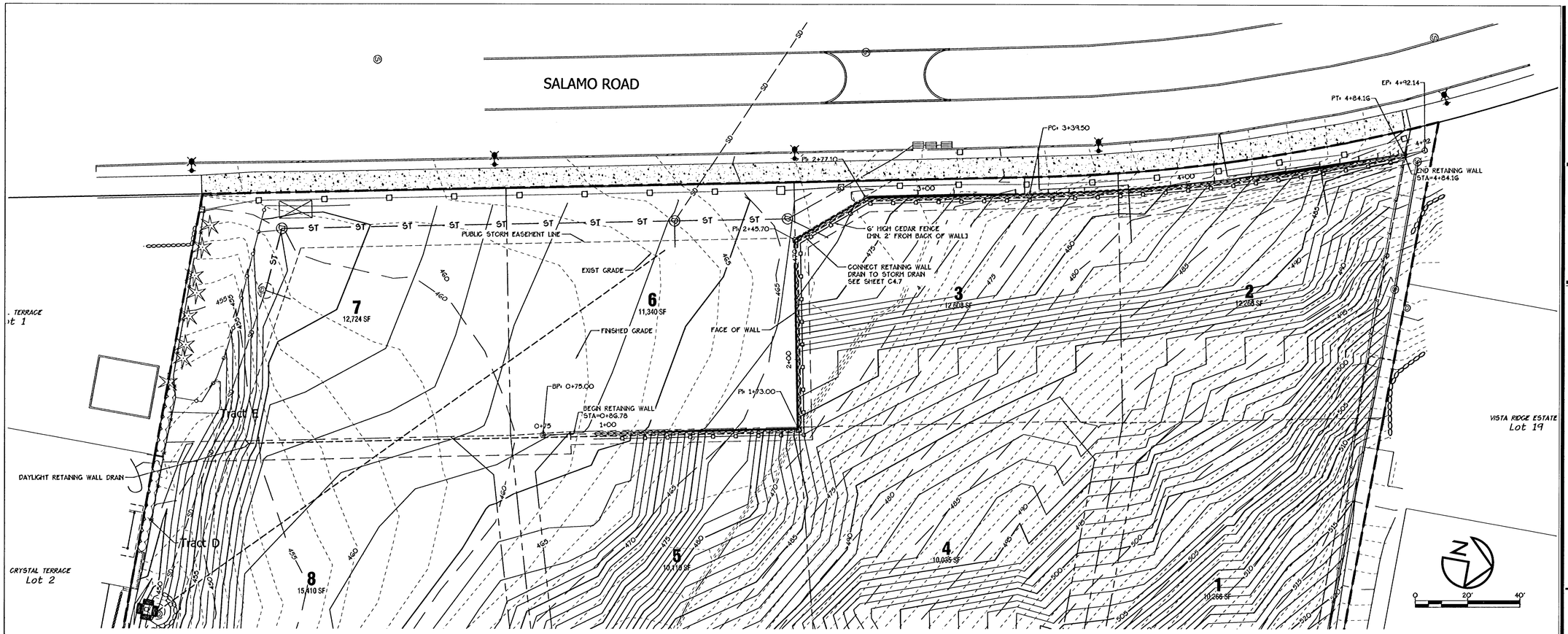

1 WEST RETAINING WALL PLAN

Scale: 1" = 20'

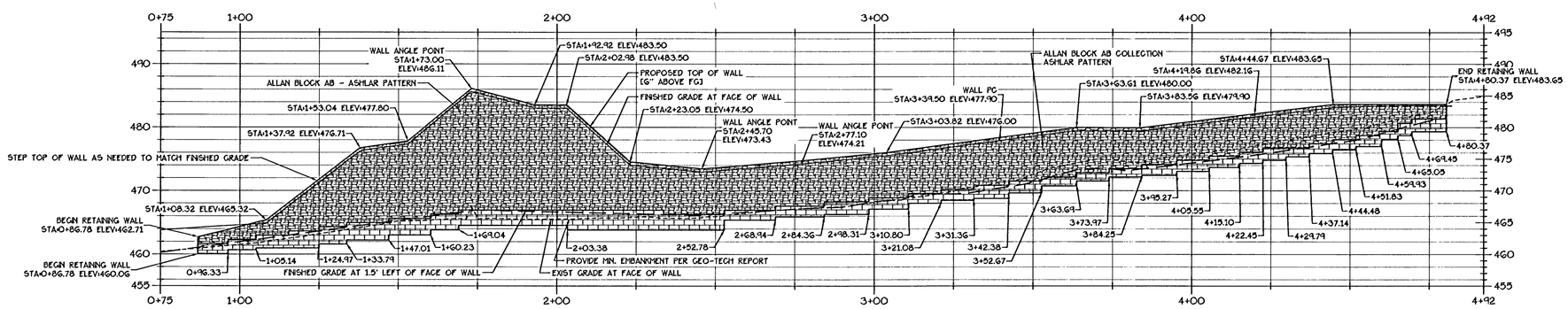

WEST RETAINING WALL PROFILE

Horiz: 1"=20'

Vert: 1"=10'

NOTES:

1. BLOCK WALL FOOTING STEPS 7 7/8" AS SHOWN HEREON. MAINTAIN BURY DEPTH AS REQUIRED BY THE GEOTECHNICAL ENGINEER.
2. FOOTING ELEVATIONS SHOWN ARE APPROXIMATE. SEE GEOTECHNICAL ENGINEERING REPORT BY GEOPACIFIC DATED 4/14/2011 FOR STRUCTURAL DESIGN OF RETAINING WALL.
3. SEE SHEETS C3.2 - C3.4 FOR DETAILED GRADING AND EROSION CONTROL.

RECORD DRAWINGS

Prepared By: Chuck Gregory, EDG Date: 7/31/12

THESE RECORD DRAWINGS HAVE BEEN PREPARED, IN PART, ON THE BASIS OF AS-BUILT INFORMATION COMPILED BY THE CONTRACTOR AND PERIODIC OBSERVATIONS DURING CONSTRUCTION. THE INFORMATION CONTAINED IN THESE DRAWINGS ARE TO THE BEST OF MY KNOWLEDGE AN ACCURATE RECORD OF THE CONSTRUCTED PUBLIC IMPROVEMENTS. IT IS RECOMMENDED THAT USERS OF THESE DRAWINGS FIELD VERIFY UTILITY SIZES, LOCATIONS AND ELEVATIONS.

THE SAUNDERS COMPANY
DESIGN GROUP
901 N. Brutscher, Ste. 202
Newberg, Oregon 97132
Phone: 503-537-9347
www.thesaunderscompany.net

7/31/12

REGISTERED PROFESSIONAL ENGINEER 50644PE OREGON SEPT. 14, 1999 CHARLES EDWARD GREGORY

RENEWS: JUNE 30, 2013

J.T. SMITH companies

Teresa's Vineyard
Public Improvements
Sub-07-02/NDW-07-02/VAR-07-01
West Linn, Oregon

REV	DATE	SUMMARY
1	8/5/11	Client/Agency Comments
	7/2/12	Add'l As Built
	1/27/12	As Built

Project #: 9130 Drawn: CL

WEST RETAINING WALL PLAN AND PROFILE

Date: April 15, 2011

C3.5

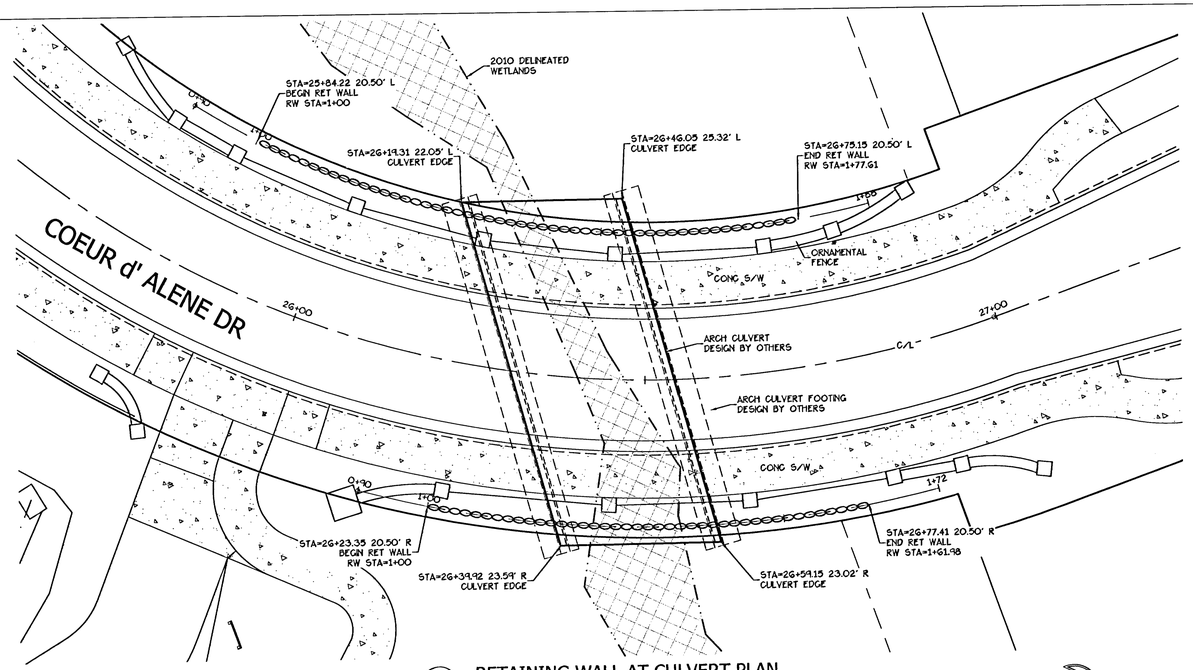

1 RETAINING WALL AT CULVERT PLAN

Scale: 1" = 10'

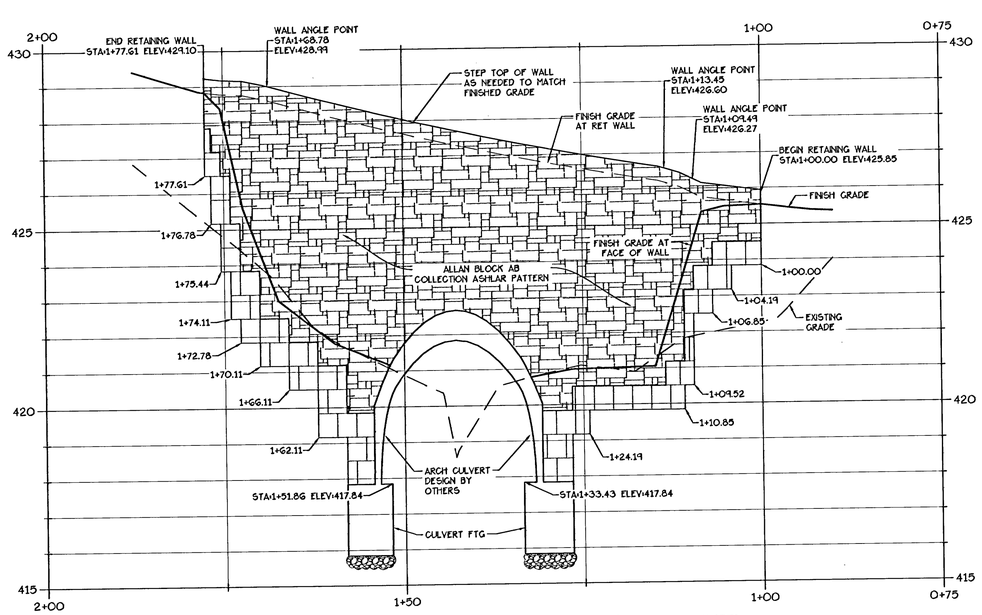

CULVERT RET WALL WEST PROFILE

Horiz: 1"=10' Vert: 1"=2'

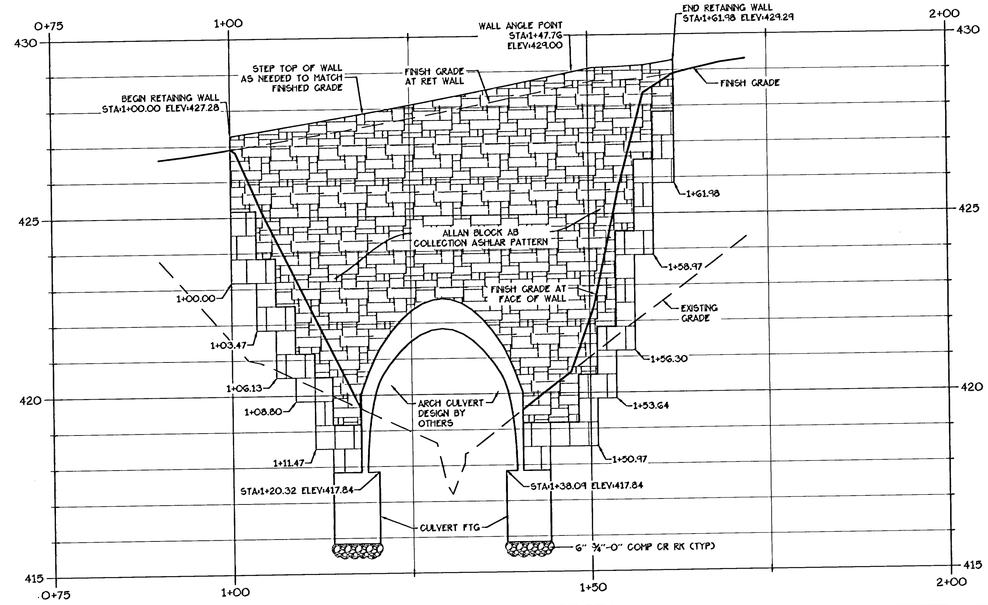

CULVERT RET WALL EAST PROFILE

Horiz: 1"=10' Vert: 1"=2'

NOTES:

1. BLOCK WALL FOOTING STEPS 7 7/8" AS SHOWN HEREON. MAINTAIN BURY DEPTH AS REQUIRED BY THE GEOTECHNICAL ENGINEER.
2. SEE GEOTECHNICAL ENGINEERING REPORT BY GEOPACIFIC DATED 4/14/2011 FOR STRUCTURAL DESIGN OF RETAINING WALL.
3. SEE SHEETS C3.2 - C3.4 FOR DETAILED GRADING AND EROSION CONTROL.

(RECORD DRAWINGS

Prepared By: Chuck Gregory, P.E. Date: 7/31/12

THESE RECORD DRAWINGS HAVE BEEN PREPARED, IN PART, ON THE BASIS OF AS-BUILT INFORMATION COMPILED BY THE CONTRACTOR AND PERIODIC OBSERVATIONS DURING CONSTRUCTION. THE INFORMATION CONTAINED IN THESE DRAWINGS ARE TO THE BEST OF MY KNOWLEDGE AN ACCURATE RECORD OF THE CONSTRUCTED PUBLIC IMPROVEMENTS. IT IS RECOMMENDED THAT USERS OF THESE DRAWINGS FIELD VERIFY UTILITY SIZES, LOCATIONS AND ELEVATIONS.

THE SAUNDERS COMPANY
DESIGN GROUP
901 N. Brutscher, Ste. 202
Newberg, Oregon 97132
Phone: 503-537-9347
www.thesaunderscompany.net

7/31/12

REGISTERED PROFESSIONAL ENGINEER #0644PE OREGON SEPT. 14, 1993 CHARLES EDWARD GREGORY

RENEWS: JUNE 30, 2013

J.T. SMITH companies

Teresa's Vineyard
Public Improvements
Sub-07-02/NDW-07-02/VAR-07-01
West Linn, Oregon

REV	DATE	SUMMARY
1	8/5/11	Client/Agency Comments
	7/2/12	Add'l As Built
	1/27/12	As Built

Project #: 9130 Drawn: CL

ARCH CULVERT RETAINING WALL PLAN & PROFILE

Date: April 15, 2011

C3.6

\\SERVER\Land Projects\9130\ENGINEERING\Construction Documents\Drawings\Permit Submittal\9130-CULVERT RET WALL.dwg, 7/24/2012 9:37:55 AM, The Saunders Company

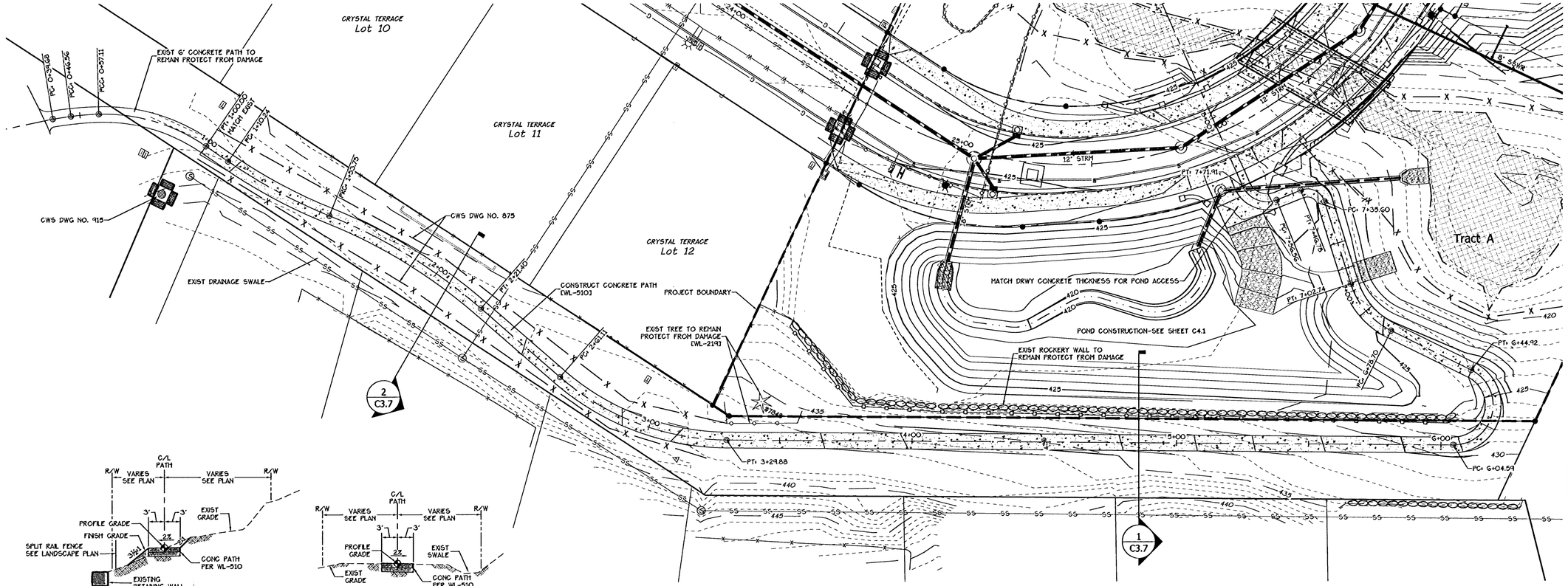

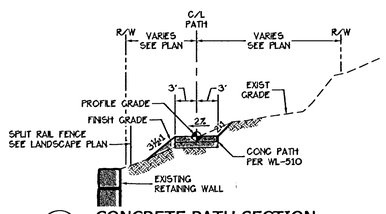

1 CONCRETE PATH SECTION

NTS STA 3+29.88 - 7+77.41

2 CONCRETE PATH SECTION

NTS STA 1+00 - 3+29.88

1 HASKINS LANE PEDESTRIAN PATH PLAN

Scale: 1" = 20'

0 20' 40'

PLAN VIEW SCALE

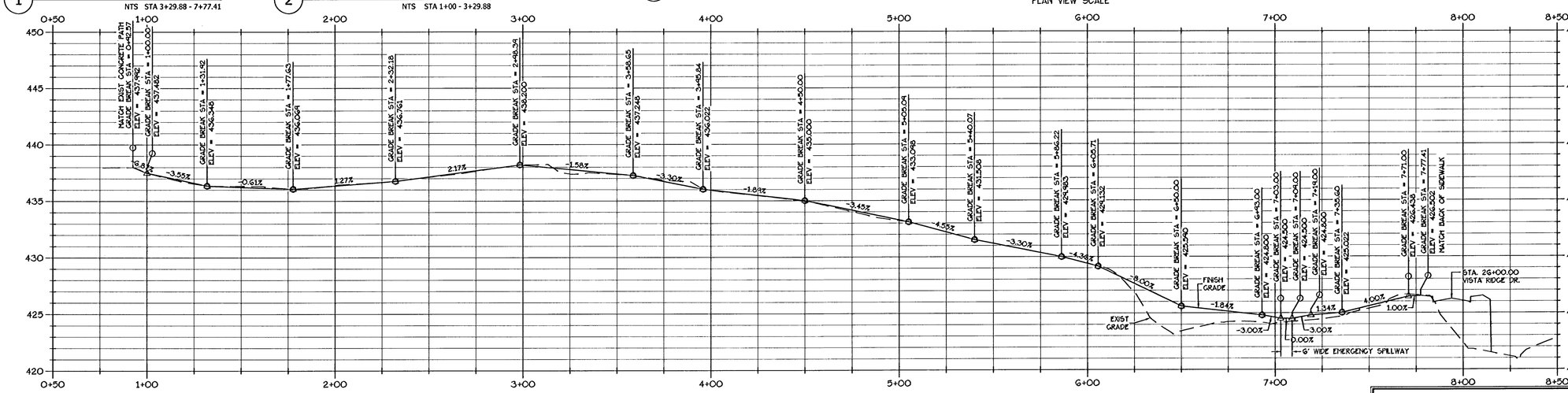

HASKINS LANE PEDESTRIAN PATH PROFILE

STA 0+50 - 8+50

Horiz: 1"=30' Vert: 1"=5'

0 30' 60'

PROFILE VIEW SCALE

RECORD DRAWINGS

Prepared By: Chuck Gregory, P.E. Date: 7/31/12

THESE RECORD DRAWINGS HAVE BEEN PREPARED, IN PART, ON THE BASIS OF AS-BUILT INFORMATION COMPILED BY THE CONTRACTOR AND PERIODIC OBSERVATIONS DURING CONSTRUCTION. THE INFORMATION CONTAINED IN THESE DRAWINGS ARE TO THE BEST OF MY KNOWLEDGE AN ACCURATE RECORD OF THE CONSTRUCTED PUBLIC IMPROVEMENTS. IT IS RECOMMENDED THAT USERS OF THESE DRAWINGS FIELD VERIFY UTILITY SIZES, LOCATIONS AND ELEVATIONS.

THE SAUNDERS COMPANY
DESIGN GROUP
901 N. Brutscher, Ste. 202
Newberg, Oregon 97132
Phone: 503-537-9347
www.thesaunderscompany.net

7/31/12

REGISTERED PROFESSIONAL ENGINEER 50644PE OREGON SEPT. 14, 1993 CHARLES EDWARD GREGORY

RENEWS: JUNE 30, 2013

J.T. SMITH companies

Teresa's Vineyard
Public Improvements
Sub-07-02/NDW-07-02/VAR-07-01
West Linn, Oregon

REV	DATE	SUMMARY
2	8/30/11	Agency Comments
	7/2/12	Add'l As Built
	1/27/12	As Built

Project #: 9130 Drawn: CL

HASKINS LANE PEDESTRIAN PATH PLAN & PROFILE

Date: April 15, 2011

C3.7

\\SERVER\Last Projects\9130\ENGINEERING\Construction Documents\Drawings\Permit Submittal\9130-4-PATH-PROFILE-C-5.dwg, 7/24/2012 9:38:33 AM, The Saunders Company

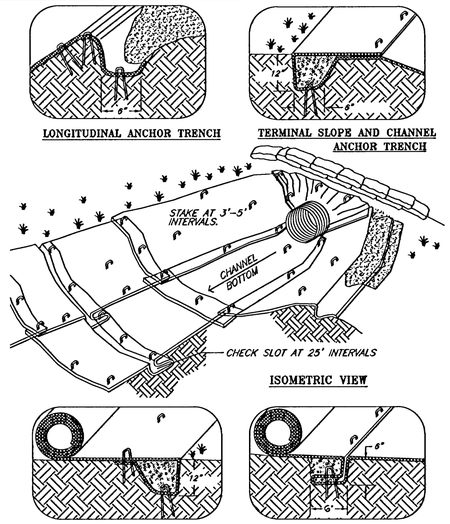

NOTES:
1. CHECK SLOTS TO BE CONSTRUCTED PER MANUFACTURERS SPECIFICATIONS.
2. STAKING OR STAPLING LAYOUT PER MANUFACTURERS SPECIFICATIONS.

PER OREGON DEQ. CONTRACTOR SHALL USE 12" STAPLES

© 1994 JOHN MACCLAIN
© FILE: BUNKTCHA

MATTING CHANNEL INSTALLATION
DRAWING NO. 800 REVISED 12-06
CleanWater Services — Our commitment is clear.

FOR FURTHER INFORMATION ON DESIGN CRITERIA SEE CHAPTER 4 OF CLEAN WATER SERVICES EROSION PREVENTION AND SEDIMENT CONTROL PLANNING AND DESIGN MANUAL.

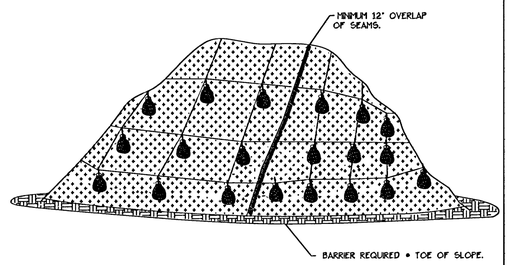

PLASTIC SHEETING

NOTES:
1. MINIMUM 12" OVERLAP OF ALL SEAMS REQUIRED.
2. BARRIER REQUIRED @ TOE OF STOCK PILE.
3. COVERING MAINTAINED TIGHTLY IN PLACE BY USING SANDBAGS OR TIRES ON ROPES WITH A MAXIMUM 10' GRID SPACING IN ALL DIRECTIONS.

PLASTIC SHEETING
DRAWING NO. 810 REVISED 12-06
CleanWater Services — Our commitment is clear.

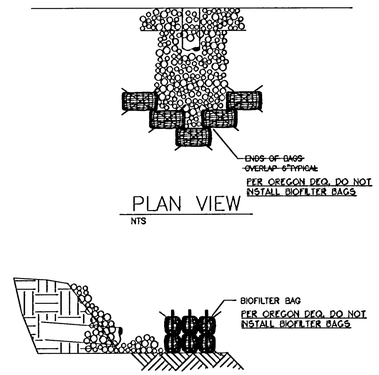

NOTE:
1. BIO BAGS ONLY REQUIRED WHEN DISCHARGING SEDIMENT LADEN WATER.
2. STAKING OF BAGS REQUIRED WITH EITHER METHOD USING (2) 1"x 2" WOOD STAKES OR APPROVED EQUAL PER BAG.

FOR FURTHER INFORMATION ON DESIGN CRITERIA SEE CHAPTER 4 OF CLEAN WATER SERVICES EROSION PREVENTION AND SEDIMENT CONTROL PLANNING AND DESIGN MANUAL.

OUTLET PROTECTION
RIP RAP
Detail Drawing 820 REVISED 12-06
CleanWater Services — Our commitment is clear.

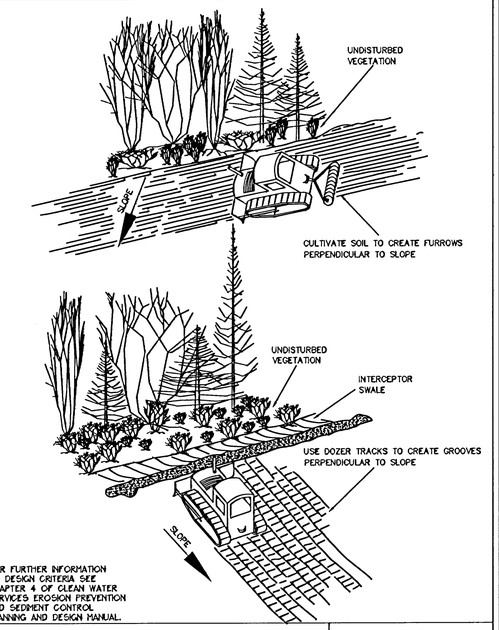

FOR FURTHER INFORMATION ON DESIGN CRITERIA SEE CHAPTER 4 OF CLEAN WATER SERVICES EROSION PREVENTION AND SEDIMENT CONTROL PLANNING AND DESIGN MANUAL.

SURFACE ROUGHENING
CAT TRACKING
DRAWING NO. 830 REVISED 12-06
CleanWater Services — Our commitment is clear.

FOR FURTHER INFORMATION ON DESIGN CRITERIA SEE CHAPTER 4 OF CLEAN WATER SERVICES EROSION PREVENTION AND SEDIMENT CONTROL PLANNING AND DESIGN MANUAL.

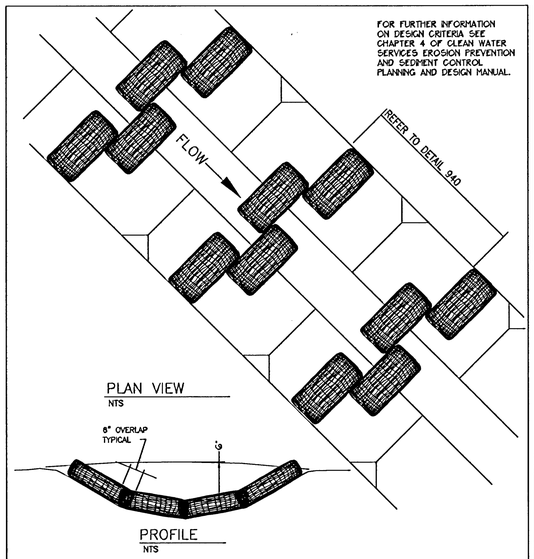

NOTES:
1. STAKING OF BAGS REQUIRED USING (2) 1"x2" WOOD STAKES OR APPROVED EQUAL PER BAG.
2. SURFACE MUST BE SMOOTH BEFORE APPLICATION.
3. CHECK DAMS CAN BE CONSTRUCTED USING STRAW WATTLES OR OTHER MATERIALS AS APPROVED BY THE DISTRICT OR CITY.

CHECK DAM
BIO-FILTER BAG
DRAWING NO. 845 REVISED 12-06
CleanWater Services — Our commitment is clear.

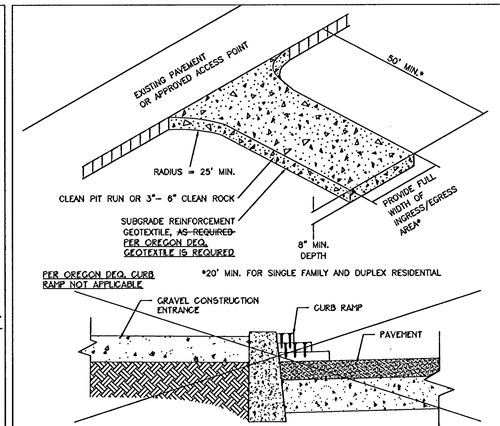

NOTES:
1. THE ENTRANCE SHALL BE MAINTAINED IN A CONDITION THAT WILL PREVENT TRACKING OR FLOWING OF SEDIMENT ONTO PUBLIC RIGHT-OF-WAYS. THIS MAY REQUIRE TOP DRESSING, REPAIR AND/OR CLEAN OUT OF ANY MEASURES USED TO TRAP SEDIMENT.
2. WHEN NECESSARY, WHEELS SHALL BE CLEANED PRIOR TO ENTRANCE ONTO PUBLIC RIGHT-OF- WAY.
3. WHEN WASHING IS REQUIRED, IT SHALL BE DONE ON AN AREA STABILIZED WITH CRUSHED STONE THAT DRAINS INTO AN APPROVED SEDIMENT TRAP OR SEDIMENT BASIN.
4. WHERE RUNOFF CONTAINING SEDIMENT LADEN WATER IS LEAVING THE SITE VIA THE CONSTRUCTION ENTRANCE, OTHER MEASURES SHALL BE IMPLEMENTED TO DIVERT RUNOFF THROUGH AN APPROVED FILTERING SYSTEM.
5. DIMENSIONS
   SINGLE FAMILY
   20' LONG BY 20' WIDE 8" DEEP OF ¾" MINUS CLEAN ROCK.
   COMMERCIAL
   50' LONG BY 20' WIDE 3-6" CLEAN ROCK, GOVERNING AUTHORITY MAY REQUIRE GEOTEXTILE FABRIC TO PREVENT SUB-SOIL PUMPING.

FOR FURTHER INFORMATION ON DESIGN CRITERIA SEE CHAPTER 4 OF CLEAN WATER SERVICES EROSION PREVENTION AND SEDIMENT CONTROL PLANNING AND DESIGN MANUAL.

CONSTRUCTION ENTRANCE
Detail Drawing 855 REVISED 12-06
CleanWater Services — Our commitment is clear.

Figure 4.2-B Drive-Through Wheel Wash Structure

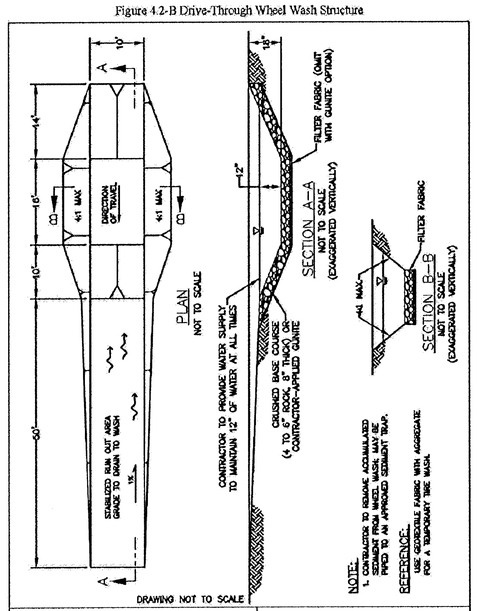

EROSION CONTROL MANUAL
WHEEL WASH STRUCTURE
Detail Drawing 4.2-B

FILE DRAFT:INSPECTOR'S GRAPHICS DRAWING PLOT 14

THE SAUNDERS COMPANY
DESIGN GROUP
901 N. Brutscher, Ste. 202
Newberg, Oregon 97132
Phone: 503-537-9347
www.thesaunderscompany.net

7/31/12
REGISTERED PROFESSIONAL ENGINEER 50644PE OREGON SEPT. 14, 1999 CHARLES EDWARD GREGORY
RENEWS: JUNE 30, 2013

J.T. SMITH companies

Teresa's Vineyard
Public Improvements
Sub-07-02/NDW-07-02/VAR-07-01
West Linn, Oregon

REV	DATE	SUMMARY
1	8/5/11	Client/Agency Comments
2	8/30/11	Agency Comments
	7/2/12	Add'l As Built
	1/27/12	As Built

Project #: 9130 Drawn: CL

CWS & COP
STANDARD PLANS AND DETAILS
EROSION CONTROL

Date: April 15, 2011

C3.8

RECORD DRAWINGS
Prepared By: Chuck Gregory Date: 7/31/12
Chuck Gregory, P.E.
THESE RECORD DRAWINGS HAVE BEEN PREPARED, IN PART, ON THE BASIS OF AS-BUILT INFORMATION COMPILED BY THE CONTRACTOR AND PERIODIC OBSERVATIONS DURING CONSTRUCTION. THE INFORMATION CONTAINED IN THESE DRAWINGS ARE TO THE BEST OF MY KNOWLEDGE AN ACCURATE RECORD OF THE CONSTRUCTED PUBLIC IMPROVEMENTS. IT IS RECOMMENDED THAT USERS OF THESE DRAWINGS FIELD VERIFY UTILITY SIZES, LOCATIONS AND ELEVATIONS.

\\SERVER\Land Projects\9130\ENGINEERING\Construction Documents\Drawings\Permit Submittal\9130-DETAILS.dwg, 7/24/2012 9:39:00 AM, The Saunders Company

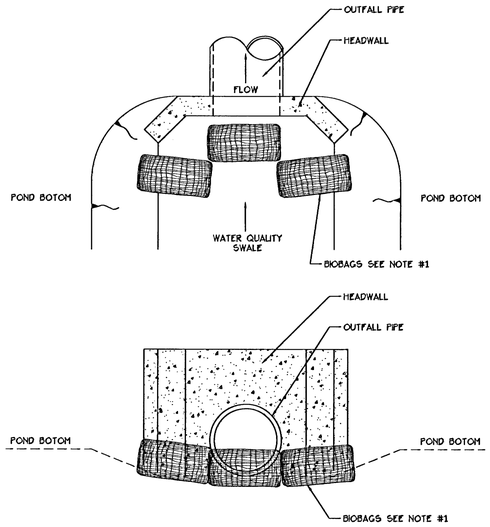

NOTES:
1. PLACE BIOBAGS UPSTREAM OF OUTLET PIPE/HEADWALL. OVERLAP BIOBAGS TO PREVENT FLOW BETWEEN

POND OUTLET PROTECTION — 1 / C3.9

SCALE: N.T.S.

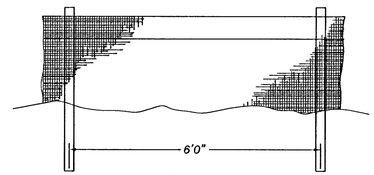

FRONT VIEW

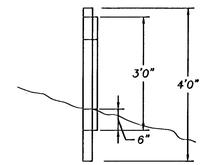

SIDE VIEW

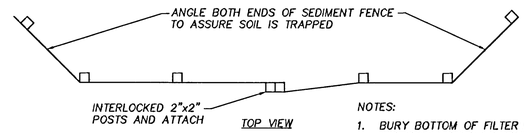

TOP VIEW

NOTES:
1. BURY BOTTOM OF FILTER FABRIC 6" MIN. VERTICALLY BELOW FINISHED GRADE.
2. 2"x2" FIR, PINE, OR STEEL FENCE POSTS.
3. STITCHED LOOPS TO BE INSTALLED UPHILL SIDE OF SLOPE.
4. COMPACT NATIVE FILL IN ALL AREAS OF FILTER FABRIC TRENCH.

SEDIMENT FENCE — 2 / C3.9

SCALE: N.T.S.

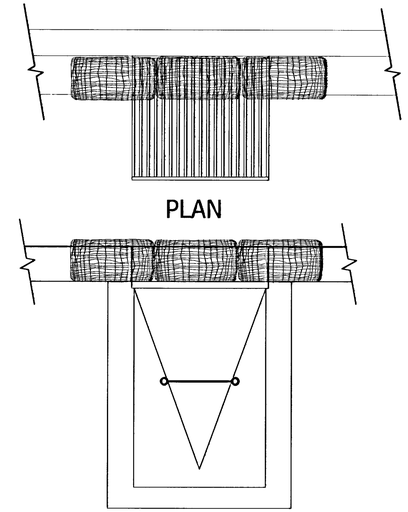

PLAN

FRONT

NOTES:
1. ENSURE THAT NO GAPS EXIST BETWEEN BAGS AND ½ BAG OVERLAP OF OPENING.

COMBINATION INLET PROTECTION — 3 / C3.9

SCALE: N.T.S.

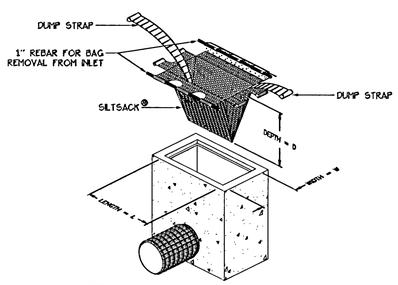

NOTES:
1. USE REGULAR FLOW ONLY. DO NOT USE HIGH FLOW INSERT BAGS

CATCH BASIN INSERT BAG — 4 / C3.9

SCALE: N.T.S.

RECORD DRAWINGS

Prepared By: Chuck Gregory, P.E. Date: 7/31/12

THESE RECORD DRAWINGS HAVE BEEN PREPARED, IN PART, ON THE BASIS OF AS-BUILT INFORMATION COMPILED BY THE CONTRACTOR AND PERIODIC OBSERVATIONS DURING CONSTRUCTION. THE INFORMATION CONTAINED IN THESE DRAWINGS ARE TO THE BEST OF MY KNOWLEDGE AN ACCURATE RECORD OF THE CONSTRUCTED PUBLIC IMPROVEMENTS. IT IS RECOMMENDED THAT USERS OF THESE DRAWINGS FIELD VERIFY UTILITY SIZES, LOCATIONS AND ELEVATIONS.

THE SAUNDERS COMPANY
DESIGN GROUP
901 N. Brutscher, Ste. 202
Newberg, Oregon 97132
Phone: 503-537-9347
www.thesaunderscompany.net

7/31/12
REGISTERED PROFESSIONAL ENGINEER 50844PE OREGON SEPT. 14, 1993 CHARLES EDWARD GREGORY
RENEWS: JUNE 30, 2013

J.T. SMITH companies

Teresa's Vineyard
Public Improvements
Sub-07-02/NDW-07-02/VAR-07-01
West Linn, Oregon

REV	DATE	SUMMARY
1	8/5/11	Client/Agency Comments
	7/2/12	Add'l As Built
	1/27/12	As Built

Project #: 9130 Drawn: CL

STANDARD PLANS AND DETAILS
EROSION CONTROL

Date: April 15, 2011

C3.9

\\SERVER\Land Projects\9130\ENGINEERING\Construction Documents\Drawings\Permit Submittal\9130-DETAILS.dwg, 7/24/2012 8:33:16 AM, The Saunders Company

NOTES:
1. CONSTRUCT SIDEWALK PER WL-508. SIDEWALK CONSTRUCTION TO BE COMPLETED IN CONJUNCTION WITH HOME. EXCEPT AS NOTED ON C1.4.
2. CONSTRUCT CURB RAMP PER WL-507A.
3. NOT USED.
4. CONSTRUCT DRIVEWAY PER WL-503B.
5. CONSTRUCT PARALLEL CURB RAMP PER WL-506B.

NOT USED

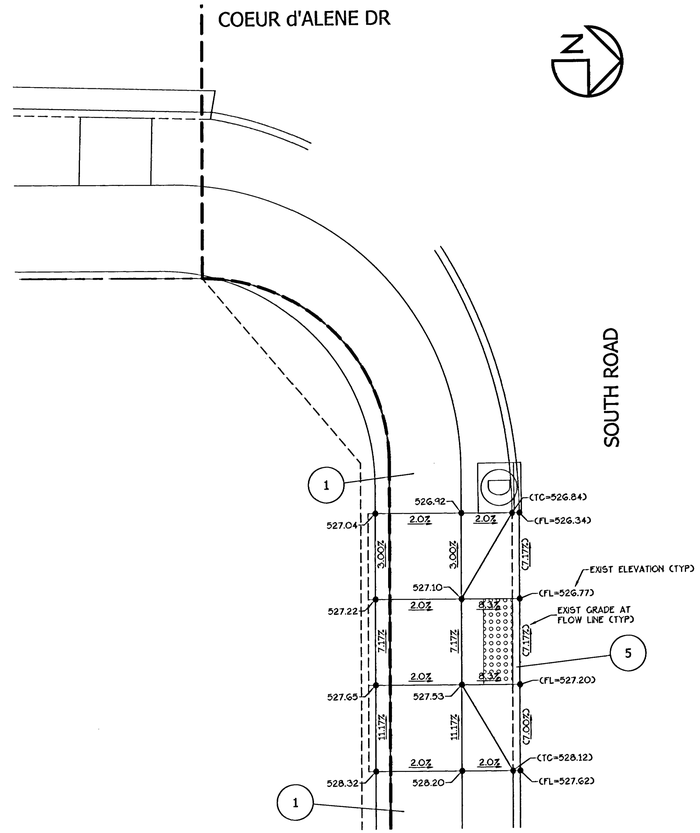

1 CURB RAMP DETAIL
Scale: 1"=5'

2 CURB RAMP DETAIL
Scale: 1"=5'

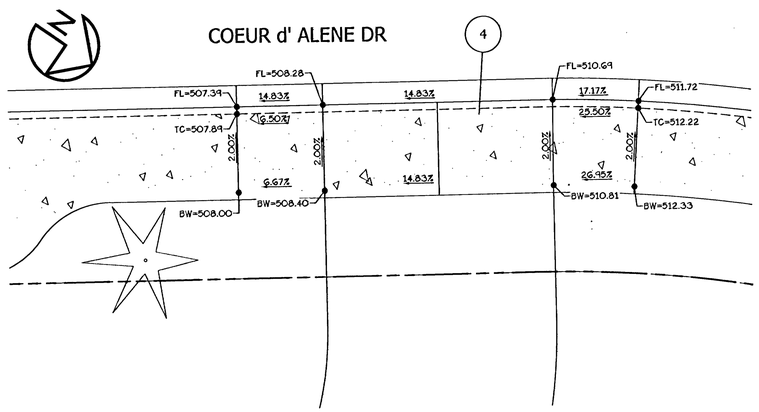

3 SIDEWALK RAMP AT LOT 30 DRIVEWAY DETAIL
Scale: 1"=5'

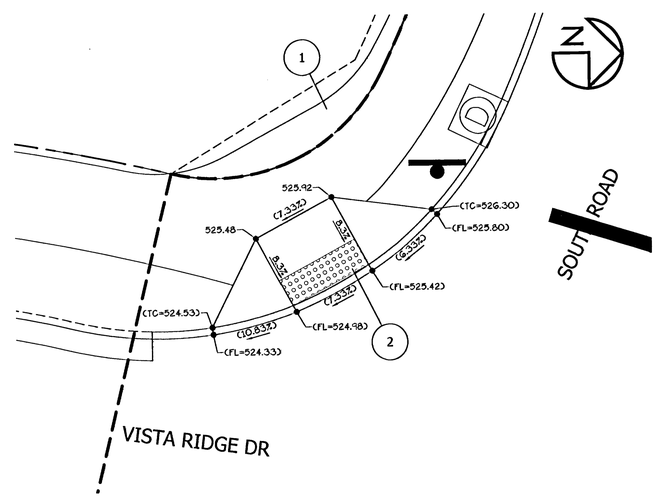

4 CURB RAMP DETAIL
Scale: 1"=5'

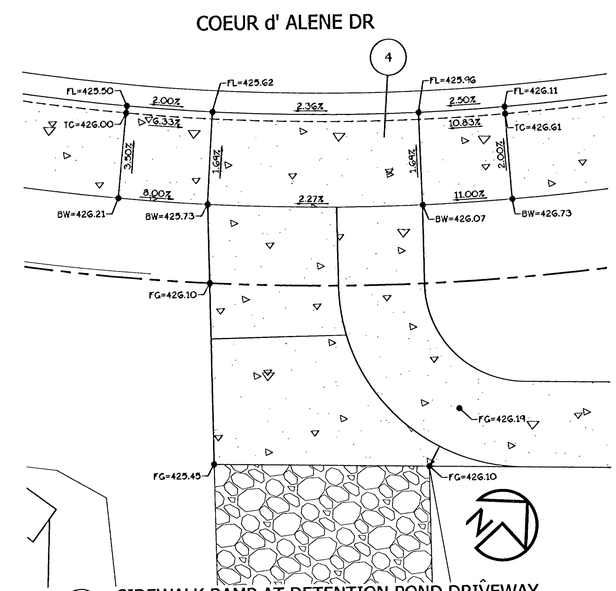

5 SIDEWALK RAMP AT DETENTION POND DRIVEWAY
Scale: 1"=5'

RECORD DRAWINGS
Prepared By: Chuck Gregory Date: 7/31/12
Chuck Gregory, P.E.
THESE RECORD DRAWINGS HAVE BEEN PREPARED, IN PART, ON THE BASIS OF AS-BUILT INFORMATION COMPILED BY THE CONTRACTOR AND PERIODIC OBSERVATIONS DURING CONSTRUCTION. THE INFORMATION CONTAINED IN THESE DRAWINGS ARE TO THE BEST OF MY KNOWLEDGE AN ACCURATE RECORD OF THE CONSTRUCTED PUBLIC IMPROVEMENTS. IT IS RECOMMENDED THAT USERS OF THESE DRAWINGS FIELD VERIFY UTILITY SIZES, LOCATIONS AND ELEVATIONS.

0 5' 10'

THE SAUNDERS COMPANY
DESIGN GROUP
901 N. Brutscher, Ste. 202
Newberg, Oregon 97132
Phone: 503-537-9347
www.thesaunderscompany.net

7/31/12
REGISTERED PROFESSIONAL ENGINEER
51844PE
OREGON
SEPT. 14, 1999
CHARLES EDWARD GREGORY
RENEWS: JUNE 30, 2013

J.T. SMITH companies

Teresa's Vineyard
Public Improvements
Sub-07-02/NDW-07-02/VAR-07-01
West Linn, Oregon

REV	DATE	SUMMARY
1	8/5/11	Client/Agency Comments
2	8/30/11	Agency Comments
	7/2/12	Add'l As Built
	1/27/12	As Built

Project #: 9130 Drawn: CL

CURB & DRIVEWAY RAMP DETAIL PLANS

Date: April 15, 2011

C3.10

\\SERVER\Land Projects\9130\ENGINEERING\Construction Documents\Drawings\Permit Submittal\9130-A04-RAMPS.dwg, 7/24/2012 9:39:38 AM, The Saunders Company

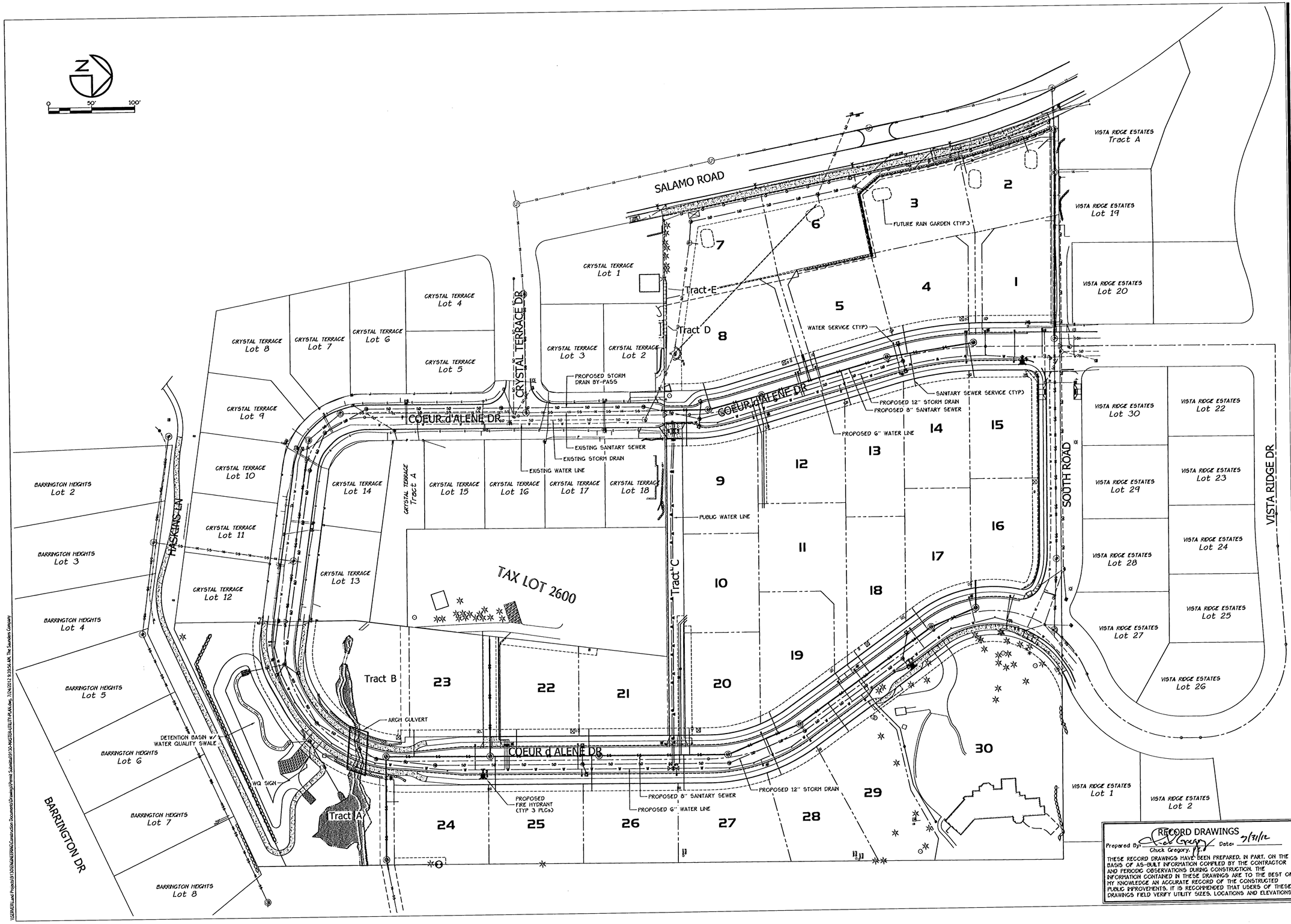

RECORD DRAWINGS

Prepared By: Chuck Gregory, P.E. Date: 7/31/12

THESE RECORD DRAWINGS HAVE BEEN PREPARED, IN PART, ON THE BASIS OF AS-BUILT INFORMATION COMPILED BY THE CONTRACTOR AND PERIODIC OBSERVATIONS DURING CONSTRUCTION. THE INFORMATION CONTAINED IN THESE DRAWINGS ARE TO THE BEST OF MY KNOWLEDGE AN ACCURATE RECORD OF THE CONSTRUCTED PUBLIC IMPROVEMENTS. IT IS RECOMMENDED THAT USERS OF THESE DRAWINGS FIELD VERIFY UTILITY SIZES, LOCATIONS AND ELEVATIONS.

THE SAUNDERS COMPANY
DESIGN GROUP
901 N. Brutscher, Ste. 202
Newberg, Oregon 97132
Phone: 503-537-9347
www.thesaunderscompany.net

7/31/12
REGISTERED PROFESSIONAL ENGINEER 50644PE OREGON SEPT. 14, 1999 CHARLES EDWARD GREGORY
RENEWS: JUNE 30, 2013

J.T. SMITH companies

Teresa's Vineyard
Public Improvements
Sub-07-02/NDW-07-02/VAR-07-01
West Linn, Oregon

REV	DATE	SUMMARY
1	8/5/11	Client/Agency Comments
	7/2/12	Add'l As Built
	1/27/12	As Built

Project #: 9130 Drawn: CL

MASTER UTILITY PLAN

Date: April 15, 2011

C4.0

\\SDRIVE\Land Projects\9130\ENGINEERING\Construction Documents\Drawings\Permit Submittal\9130-MASTERUTILITY-PLAN.dwg, 7/24/2012 9:39:56 AM, The Saunders Company

(#) CONSTRUCTION NOTES:

1. INSTALL SURFACE WATER FACILITY SIGN PER WL-615.
2. SEE LANDSCAPE PLAN FOR POND AND TRACT PLANTINGS.
3. EXISTING AC TO REMAIN PROTECT FROM DAMAGE (MAINTAINED BY HOA).
4. CLASS 100 RIP RAP 8'x15'x18" THICK.
5. INSTALL CEDAR SPLIT RAIL FENCE. SEE LANDSCAPE PLAN FOR DETAIL.
6. NEW LANDSCAPED AREA. SEE LANDSCAPE PLANS (MAINTAINED BY HOA).
7. PLACE TOPSOIL ON POND BOTTOM AND SIDES PER L1.2.
8. CONSTRUCT POND ACCESS ROAD AT MAX 15% GRADE WITH 12" OF 1 ½"-0" CRUSHED ROCK BASE ON GEOTEXTILE FABRIC ON COMPACTED SUBGRADE. COMPACT SUBGRADE AND BASE ROCK TO 95% OF AASHTO T-180.
9. INSTALL 6' x 10' x 18" THICK RIP RAP OUTFALL PROTECTION.

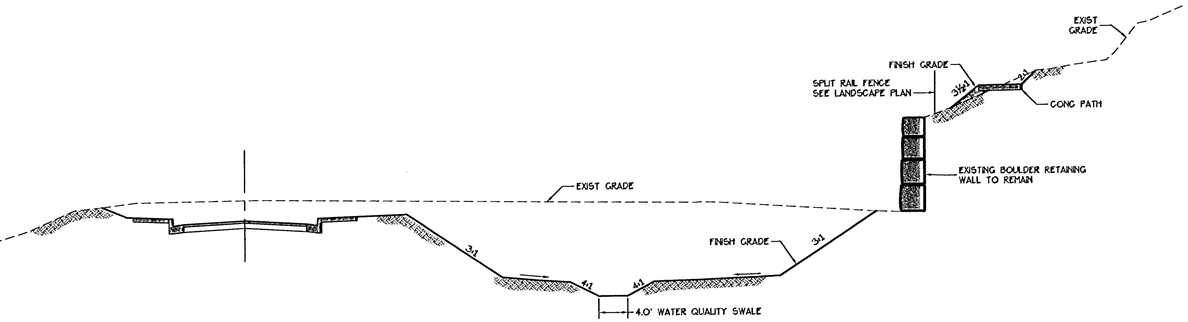

2 POND SECTION
Scale: 1" = 10' H 1" = 5' V

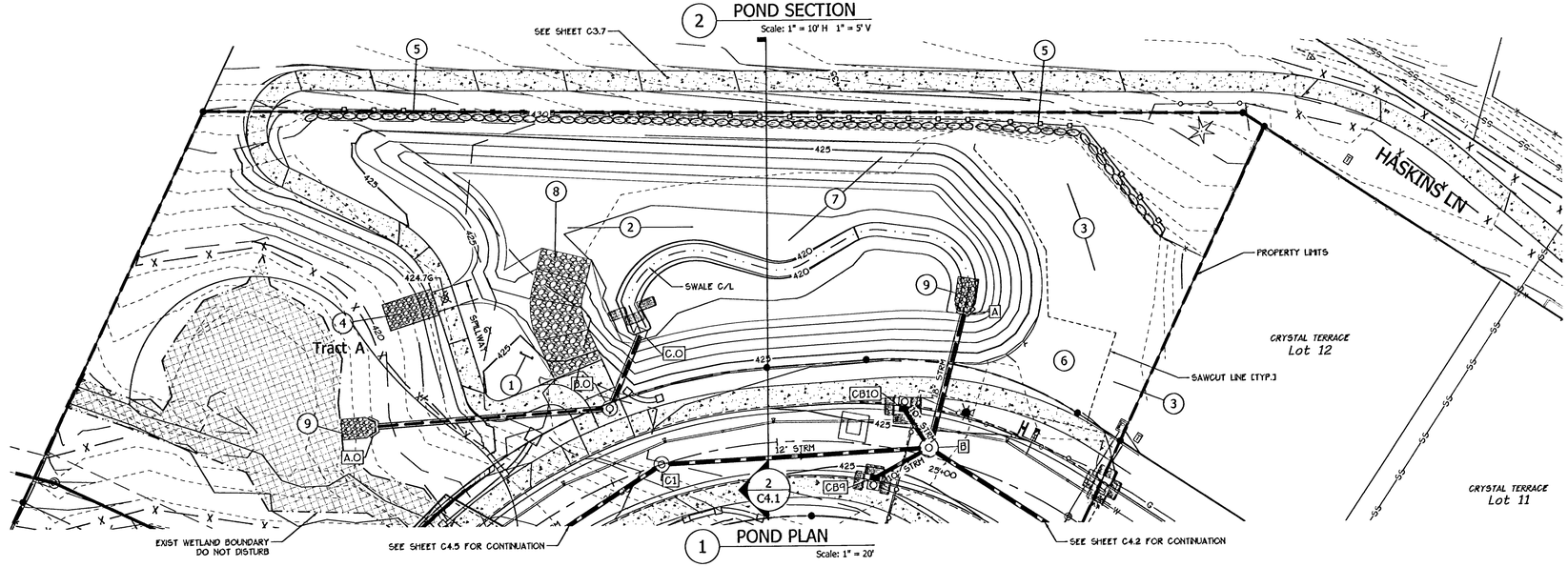

1 POND PLAN
Scale: 1" = 20'

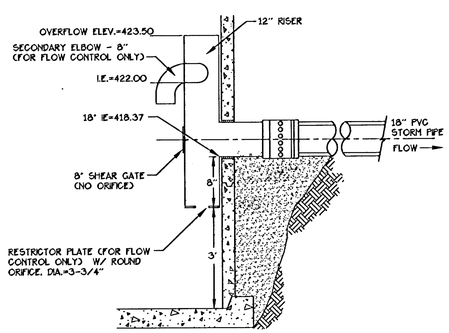

TEE STRUCTURE - FLOW CONTROL MANHOLE (REFER TO WL-607A) 1 C4.1

SCALE N.T.S.

NOTE:
PROVIDE CITY PUBLIC IMPROVEMENT MANAGER A MATERIAL SUBMITTAL PRIOR TO FABRICATION

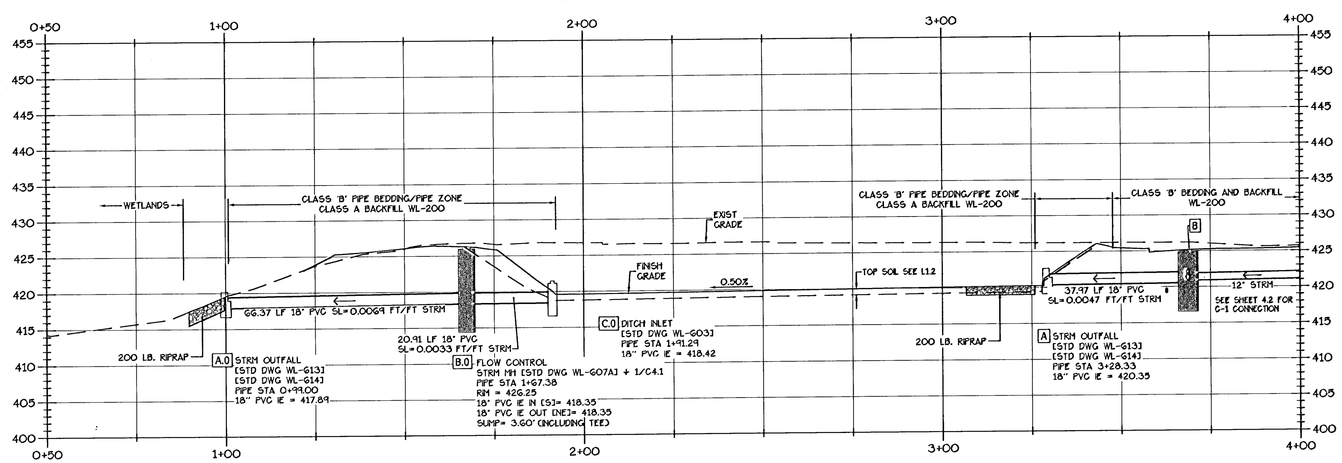

STORM OUTFALL THROUGH POND PROFILE
STA 0+50 - 4+00
Horiz: 1"=20' Vert: 1"=10'

SEE SHEET C4.6 FOR INLET TABLE

RECORD DRAWINGS
Prepared By: Chuck Gregory, P.E. Date: 7/31/12
THESE RECORD DRAWINGS HAVE BEEN PREPARED, IN PART, ON THE BASIS OF AS-BUILT INFORMATION COMPILED BY THE CONTRACTOR AND PERIODIC OBSERVATIONS DURING CONSTRUCTION. THE INFORMATION CONTAINED IN THESE DRAWINGS ARE TO THE BEST OF MY KNOWLEDGE AN ACCURATE RECORD OF THE CONSTRUCTED PUBLIC IMPROVEMENTS. IT IS RECOMMENDED THAT USERS OF THESE DRAWINGS FIELD VERIFY UTILITY SIZES, LOCATIONS AND ELEVATIONS.

THE SAUNDERS COMPANY
DESIGN GROUP
901 N. Brutscher, Ste. 202
Newberg, Oregon 97132
Phone: 503-537-9347
www.thesaunderscompany.net

7/31/12
REGISTERED PROFESSIONAL ENGINEER 50644PE OREGON SEPT. 14, 1995 CHARLES EDWARD GREGORY
RENEWS: JUNE 30, 2013

J.T. SMITH companies

Teresa's Vineyard
Public Improvements
Sub-07-02/NDW-07-02/VAR-07-01
West Linn, Oregon

REV	DATE	SUMMARY
1	8/5/11	Client/Agency Comments
2	8/30/11	Agency Comments
	7/2/12	Add'l As Built
	1/27/12	As Built

Project #: 9130 Drawn: CL

STORM WATER DETENTION/QUALITY PLAN & PROFILE

Date: April 15, 2011

C4.1

\\GSERVER\Local Projects\9130\ENGINEERING\Construction Documents\Drawings\Permit Submittal\9130-STRM-PROFILE-C4.1.dwg, 7/24/2012 9:40:36 AM, The Saunders Company

(#) CONSTRUCTION NOTES:

1. ADJUST STRUCTURE TO GRADE.
2. INSTALL MONUMENT BOX WL-513A. GRIND OR REMOVE FLANGE CROSS FROM BOTTOM SIDE OF LID.
3. SEE SECTION SHEET C4.3 FOR STREET RESTORATION DETAILS.
4. SAWCUT AND MATCH EXISTING PAVEMENT STA: 24+54.5
5. INSTALL 6' x 10' x 18" THICK RIP RAP OUTFALL PROTECTION.

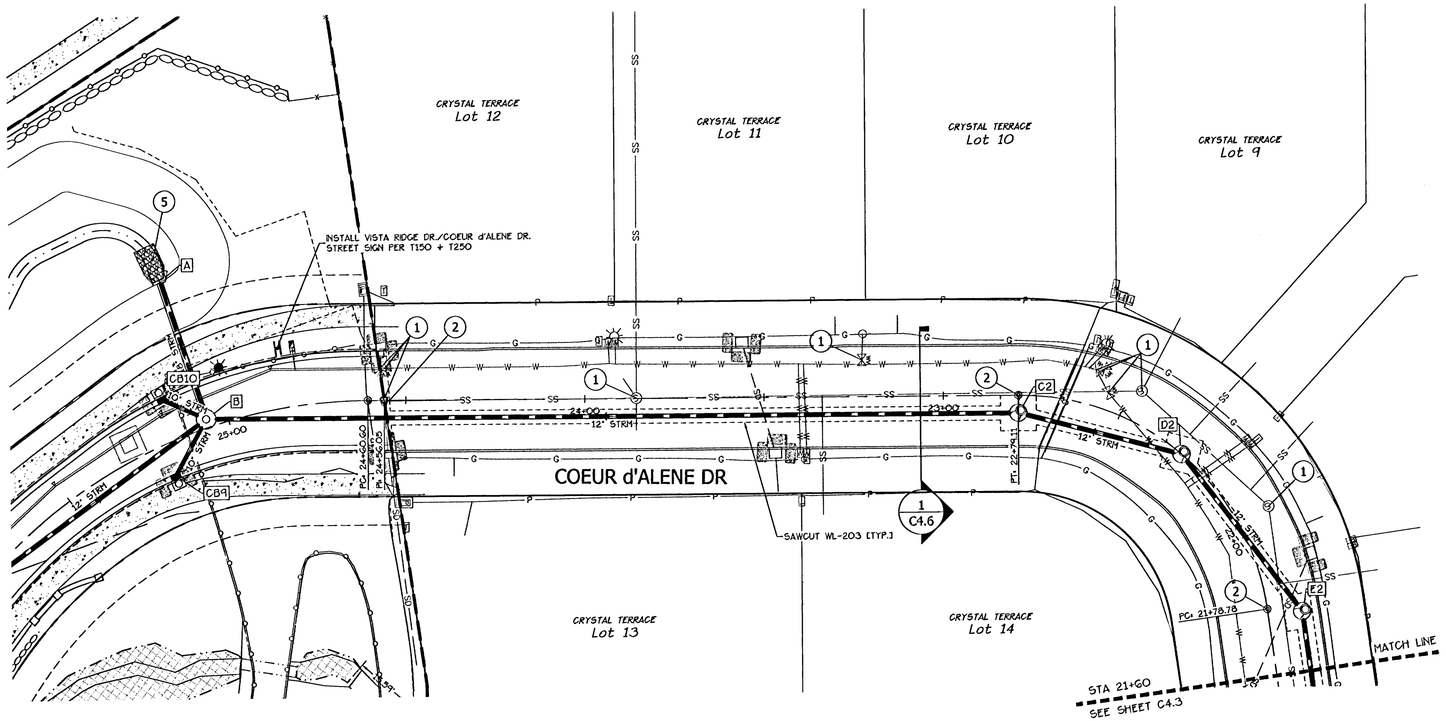

NOTE:

1. ALL UTILITY CROSSINGS NOT DIMENSIONED. HAVE A MINIMUM OF 12" CLEARANCE UNLESS OTHERWISE NOTED.

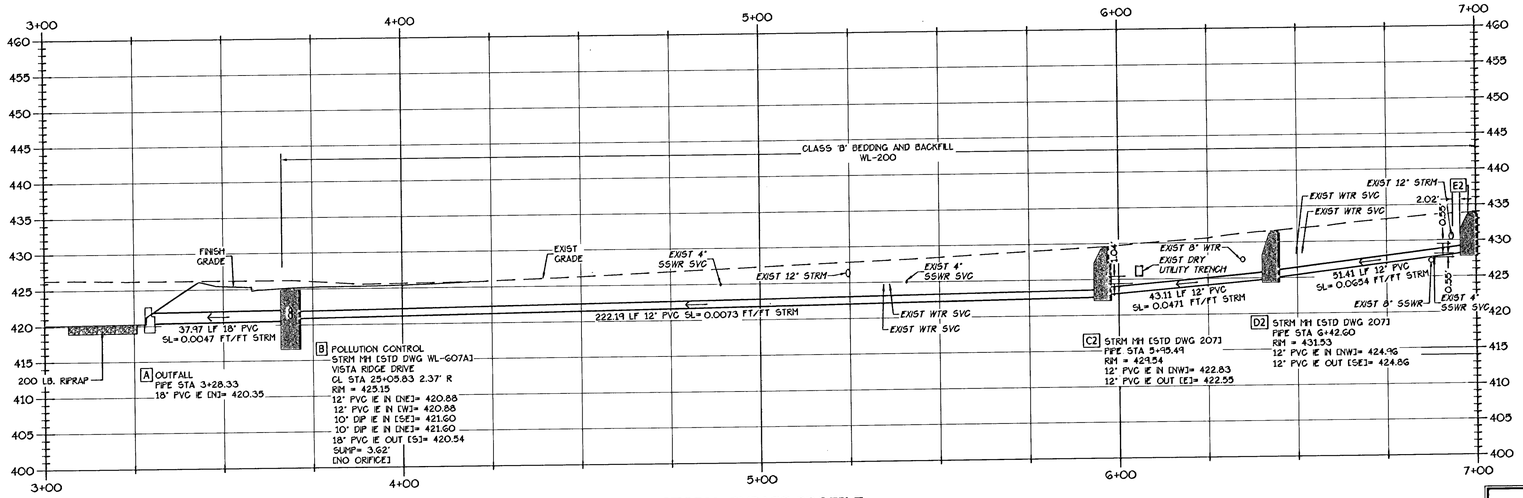

AS-BUILT NOTE:

PIPE LENGTH SHOWN IN PROFILE IS INSIDE EDGE OF MANHOLE TO INSIDE EDGE OF MANHOLE.

STORM BYPASS PROFILE
STA 3+00 - 7+00
Horiz: 1"=20' Vert: 1"=10'

N

0 20' 40'

RECORD DRAWINGS

Prepared By: Chuck Gregory, P.E. Date: 7/31/12

THESE RECORD DRAWINGS HAVE BEEN PREPARED, IN PART, ON THE BASIS OF AS-BUILT INFORMATION COMPILED BY THE CONTRACTOR AND PERIODIC OBSERVATIONS DURING CONSTRUCTION. THE INFORMATION CONTAINED IN THESE DRAWINGS ARE TO THE BEST OF MY KNOWLEDGE AN ACCURATE RECORD OF THE CONSTRUCTED PUBLIC IMPROVEMENTS. IT IS RECOMMENDED THAT USERS OF THESE DRAWINGS FIELD VERIFY UTILITY SIZES, LOCATIONS AND ELEVATIONS.

DESIGN GROUP
901 N. Brutscher, Ste. 202
Newberg, Oregon 97132
Phone: 503-537-9347
www.thesaunderscompany.net
THE SAUNDERS COMPANY

7/31/12
REGISTERED PROFESSIONAL ENGINEER
50644PE
OREGON
SEPT. 14, 1999
CHARLES EDWARD GREGORY
RENEWS: JUNE 30, 2013

J.T. SMITH companies

Teresa's Vineyard
Public Improvements
Sub-07-02/NDW-07-02/VAR-07-01
West Linn, Oregon

REV	DATE	SUMMARY
1	8/5/11	Client/Agency Comments
2	8/30/11	Agency Comments
	7/2/12	Add'l As Built
	1/27/12	As Built

Project #: 9130 Drawn: CL

STORM DRAINAGE BYPASS PLAN & PROFILE

Date: April 15, 2011

C4.2

\\SERVER\Land Projects\9130\ENGINEERING\Construction Documents\Drawings\Permit Submittal\9130-STREET-STRM-PROFILES.dwg, 7/24/2012 9:48:16 AM, The Saunders Company

(#) CONSTRUCTION NOTES:

1. ADJUST STRUCTURE TO GRADE.
2. INSTALL MONUMENT BOX WL-513A. GRIND OR REMOVE FLANGE CROSS FROM BOTTOM SIDE OF LID.
3. APPLY TACK COAT BY TRUCK WITH SPRAY BAR FOR EVEN DISTRIBUTION. CITY TO INSPECT EXISTING PAVEMENT FOR ADDITIONAL REPLACEMENT PRIOR TO OVERLAY.
4. ALL TRENCHES IN AREAS OF EXIST PAVEMENT SHALL BE TEMPORARILY PATCHED WITH COLD MIX ASPHALT OR STEEL PLATED AT THE END OF EACH WORK DAY.
5. CONTRACTOR SHALL REMOVE EXIST PAVEMENT IF LESS THAN 3 FEET TO GUTTER/FACE OF CURB FROM 6" T-CUT LINE.

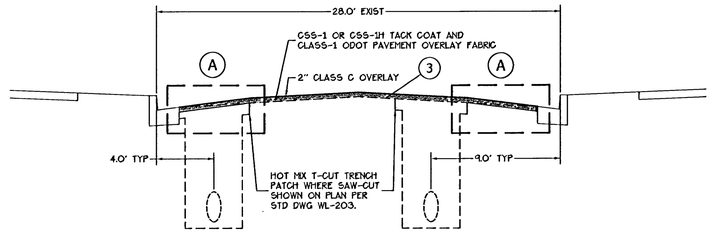

1 STREET RESTORATION SECTION
Scale: 1" = 5'

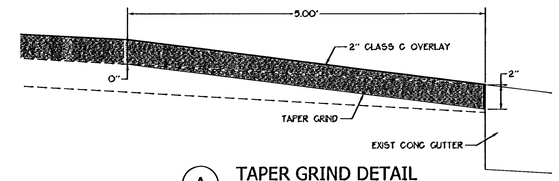

A TAPER GRIND DETAIL
Scale: 1" = 1'

SEE SHEET C1.4 FOR LIMITS OF PAVEMENT IMPROVEMENTS

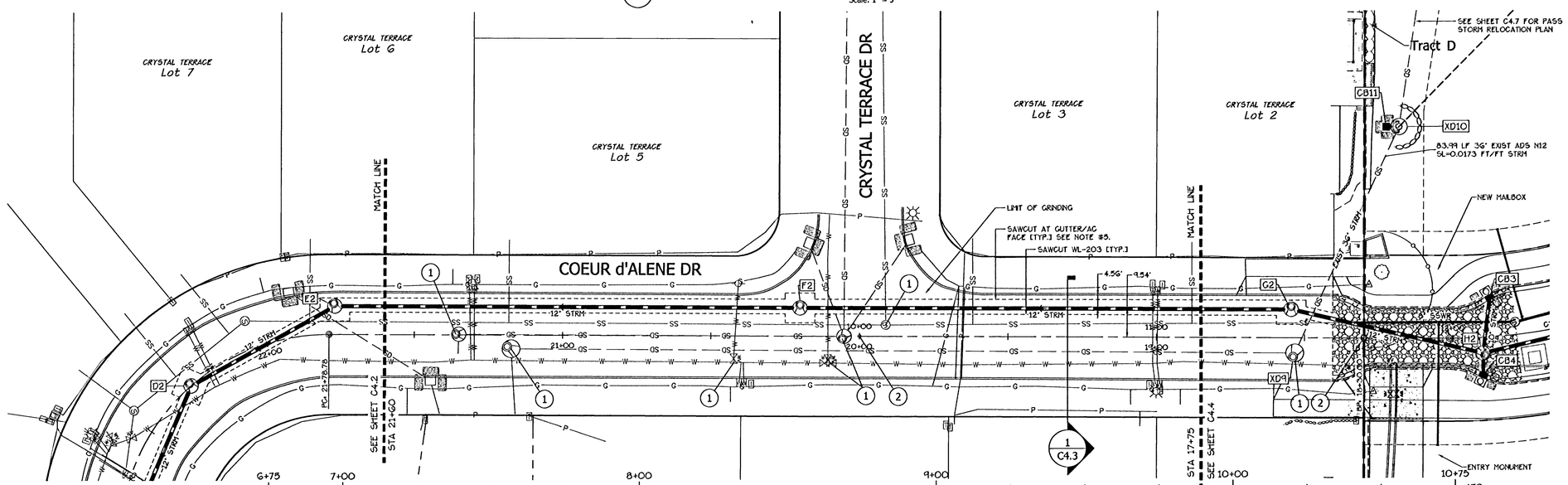

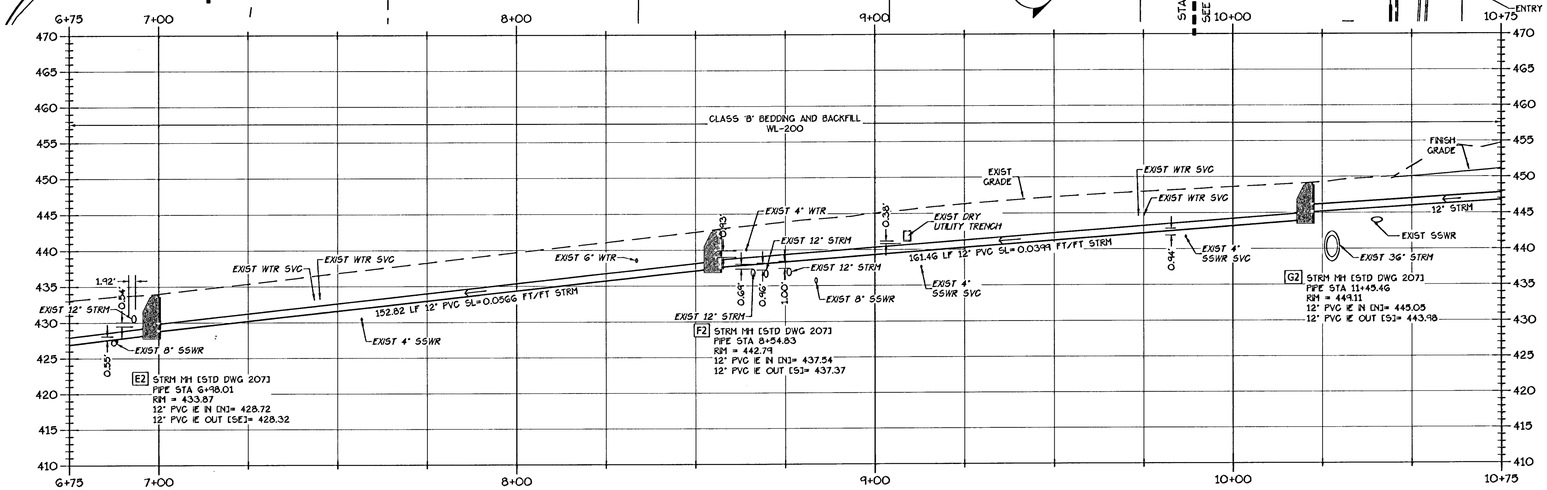

NOTES:

1. ALL UTILITY CROSSINGS NOT DIMENSIONED, HAVE A MINIMUM OF 12" CLEARANCE UNLESS OTHERWISE NOTED.
2. CONTRACTOR TO CONTACT CITY TO INSPECT ANY EXISTING WATER SERVICE CROSSINGS ENCOUNTERED DURING STORM DRAIN INSTALLATION.
3. CONTRACTOR TO CONTACT CITY TO INSPECT EXISTING PAVEMENT TO REMAIN PRIOR TO PLACING TACK COAT. CONTRACTOR TO REMOVE AND REPLACE SUBSTANDARD PAVEMENT AS DIRECTED BY CITY INSPECTOR.

STORM BYPASS PROFILE
STA 6+75 - 10+75
Horiz: 1"=20' Vert: 1"=10'

AS-BUILT NOTE:
PIPE LENGTH SHOWN IN PROFILE IS INSIDE EDGE OF MANHOLE TO INSIDE EDGE OF MANHOLE.

RECORD DRAWINGS
Prepared By: Chuck Gregory Date: 7/31/12
Chuck Gregory, P.E.
THESE RECORD DRAWINGS HAVE BEEN PREPARED, IN PART, ON THE BASIS OF AS-BUILT INFORMATION COMPILED BY THE CONTRACTOR AND PERIODIC OBSERVATIONS DURING CONSTRUCTION. THE INFORMATION CONTAINED IN THESE DRAWINGS ARE TO THE BEST OF MY KNOWLEDGE AN ACCURATE RECORD OF THE CONSTRUCTED PUBLIC IMPROVEMENTS. IT IS RECOMMENDED THAT USERS OF THESE DRAWINGS FIELD VERIFY UTILITY SIZES, LOCATIONS AND ELEVATIONS.

THE SAUNDERS COMPANY
DESIGN GROUP
901 N. Brutscher, Ste. 202
Newberg, Oregon 97132
Phone: 503-537-9347
www.thesaunderscompany.net

7/31/12
REGISTERED PROFESSIONAL ENGINEER 50644PE OREGON SEPT. 14, 1989 CHARLES EDWARD GREGORY
RENEWS: JUNE 30, 2013

J.T. SMITH companies

Teresa's Vineyard
Public Improvements
Sub-07-02/NDW-07-02/VAR-07-01
West Linn, Oregon

REV	DATE	SUMMARY
1	8/5/11	Client/Agency Comments
2	8/30/11	Agency Comments
	7/2/12	Add'l As Built
	1/27/12	As Built

Project #: 9130 Drawn: CL

STORM DRAINAGE BYPASS PLAN & PROFILE

Date: April 15, 2011

C4.3

V:\GRAFIX\Last Projects\9130\ENGINEERING\Construction Documents\Drawings\Permit Submittal\9130-STREET-STRM-PROFILE.dwg, 7/24/2012 9:46:39 AM, The Saunders Company

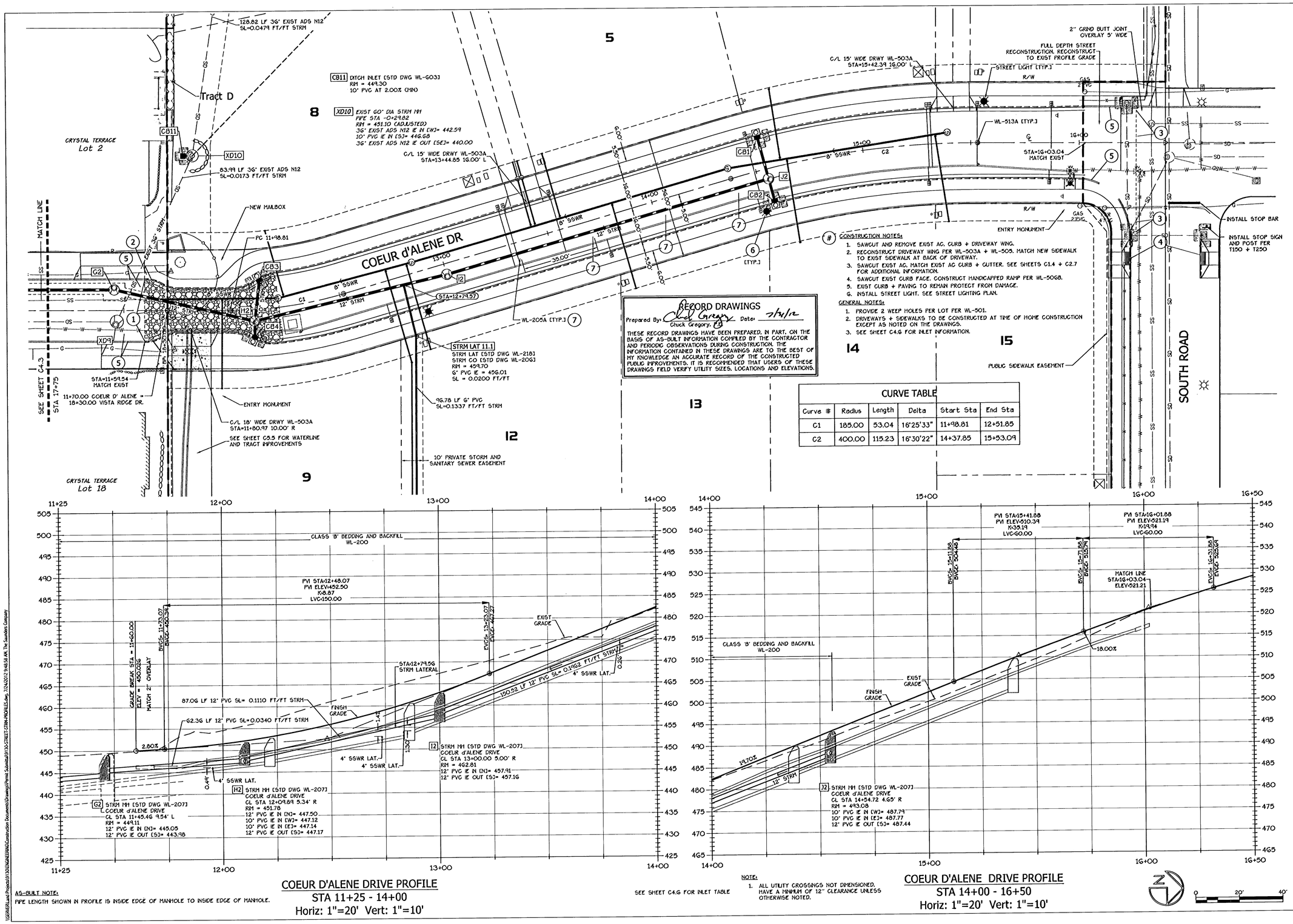

RECORD DRAWINGS

Prepared By: Chuck Gregory Date: 7/31/12

Chuck Gregory, PE

THESE RECORD DRAWINGS HAVE BEEN PREPARED, IN PART, ON THE BASIS OF AS-BUILT INFORMATION COMPILED BY THE CONTRACTOR AND PERIODIC OBSERVATIONS DURING CONSTRUCTION. THE INFORMATION CONTAINED IN THESE DRAWINGS ARE TO THE BEST OF MY KNOWLEDGE AN ACCURATE RECORD OF THE CONSTRUCTED PUBLIC IMPROVEMENTS. IT IS RECOMMENDED THAT USERS OF THESE DRAWINGS FIELD VERIFY UTILITY SIZES, LOCATIONS AND ELEVATIONS.

(#) CONSTRUCTION NOTES:

1. SAWCUT AND REMOVE EXIST AC, CURB + DRIVEWAY WING.
2. RECONSTRUCT DRIVEWAY WING PER WL-503A + WL-505. MATCH NEW SIDEWALK TO EXIST SIDEWALK AT BACK OF DRIVEWAY.
3. SAWCUT EXIST AC. MATCH EXIST AC CURB + GUTTER. SEE SHEETS C1.4 + C2.7 FOR ADDITIONAL INFORMATION.
4. SAWCUT EXIST CURB FACE. CONSTRUCT HANDICAPPED RAMP PER WL-506B.
5. EXIST CURB + PAVING TO REMAIN PROTECT FROM DAMAGE.
6. INSTALL STREET LIGHT. SEE STREET LIGHTING PLAN.

GENERAL NOTES:

1. PROVIDE 2 WEEP HOLES PER LOT PER WL-501.
2. DRIVEWAYS + SIDEWALKS TO BE CONSTRUCTED AT TIME OF HOME CONSTRUCTION EXCEPT AS NOTED ON THE DRAWINGS.
3. SEE SHEET C4.6 FOR INLET INFORMATION.

CURVE TABLE

Curve #	Radius	Length	Delta	Start Sta	End Sta
C1	185.00	53.04	16°25'33"	11+98.81	12+51.85
C2	400.00	115.23	16°30'22"	14+37.85	15+53.09

AS-BUILT NOTE:

PIPE LENGTH SHOWN IN PROFILE IS INSIDE EDGE OF MANHOLE TO INSIDE EDGE OF MANHOLE.

COEUR D'ALENE DRIVE PROFILE

STA 11+25 - 14+00

Horiz: 1"=20' Vert: 1"=10'

SEE SHEET C4.6 FOR INLET TABLE

NOTE:

1. ALL UTILITY CROSSINGS NOT DIMENSIONED. HAVE A MINIMUM OF 12" CLEARANCE UNLESS OTHERWISE NOTED.

COEUR D'ALENE DRIVE PROFILE

STA 14+00 - 16+50

Horiz: 1"=20' Vert: 1"=10'

0 20' 40'

THE SAUNDERS COMPANY DESIGN GROUP
901 N. Brutscher, Ste. 202
Newberg, Oregon 97132
Phone: 503-537-9347
www.thesaunderscompany.net

7/31/12

REGISTERED PROFESSIONAL ENGINEER 70844PE OREGON SEPT. 14, 1993 CHARLES EDWARD GREGORY

RENEWS: JUNE 30, 2013

J.T. SMITH companies

Teresa's Vineyard
Public Improvements
Sub-07-02/NDW-07-02/VAR-07-01
West Linn, Oregon

REV	DATE	SUMMARY
1	8/5/11	Client/Agency Comments
2	8/30/11	Agency Comments
	7/2/12	Add'l As Built
	1/27/12	As Built

Project #: 9130 Drawn: CL

COEUR d'ALENE DR STREET & STORM DRAINAGE PLAN & PROFILE

Date: April 15, 2011

C4.4

\\SERVER\Local Projects\9130\ENGINEERING\Construction Documents\Drawings\Permit Submittal\9130-STREET-STRM-PROFILES.dwg, 7/24/2012 9:46:58 AM, The Saunders Company

GENERAL NOTES:

1. PROVIDE 2 WEEP HOLES PER LOT PER WL-501.
2. DRIVEWAYS + SIDEWALKS TO BE CONSTRUCTED AT TIME OF HOME CONSTRUCTION EXCEPT AS NOTED ON THE DRAWINGS.
3. SEE SHEET C4.6 FOR INLET INFORMATION.

CONSTRUCTION NOTES:

1. SAWCUT EXIST AC. MATCH EXIST AC CURB + GUTTER.
2. EXIST CURB + PAVING TO REMAIN PROTECT FROM DAMAGE.
3. CONSTRUCT 20' X 4' CONSPAN CULVERT PER SHEET C3.6 AND ADDITIONAL STRUCTURAL DRAWINGS. SEE WETLAND PERMIT FOR IMPACT REQUIREMENTS.
4. INSTALL 20 LF OF TRENCH DRAIN AT BACK OF SIDEWALK.
5. SEE DEMO PLAN SHEET C2.7
6. CONSTRUCT BRICK PILLARS AND ORNAMENTAL FENCE PER DETAILS 4/C6.8 AND 5/C6.8.
7. NOT USED.
8. STA 24+79.5. INSTALL ¾" IRRIGATION DOUBLE CHECK VALVE PER DETAIL 1/C6.8.
9. INSTALL STREET LIGHT. SEE STREET LIGHTING PLAN.

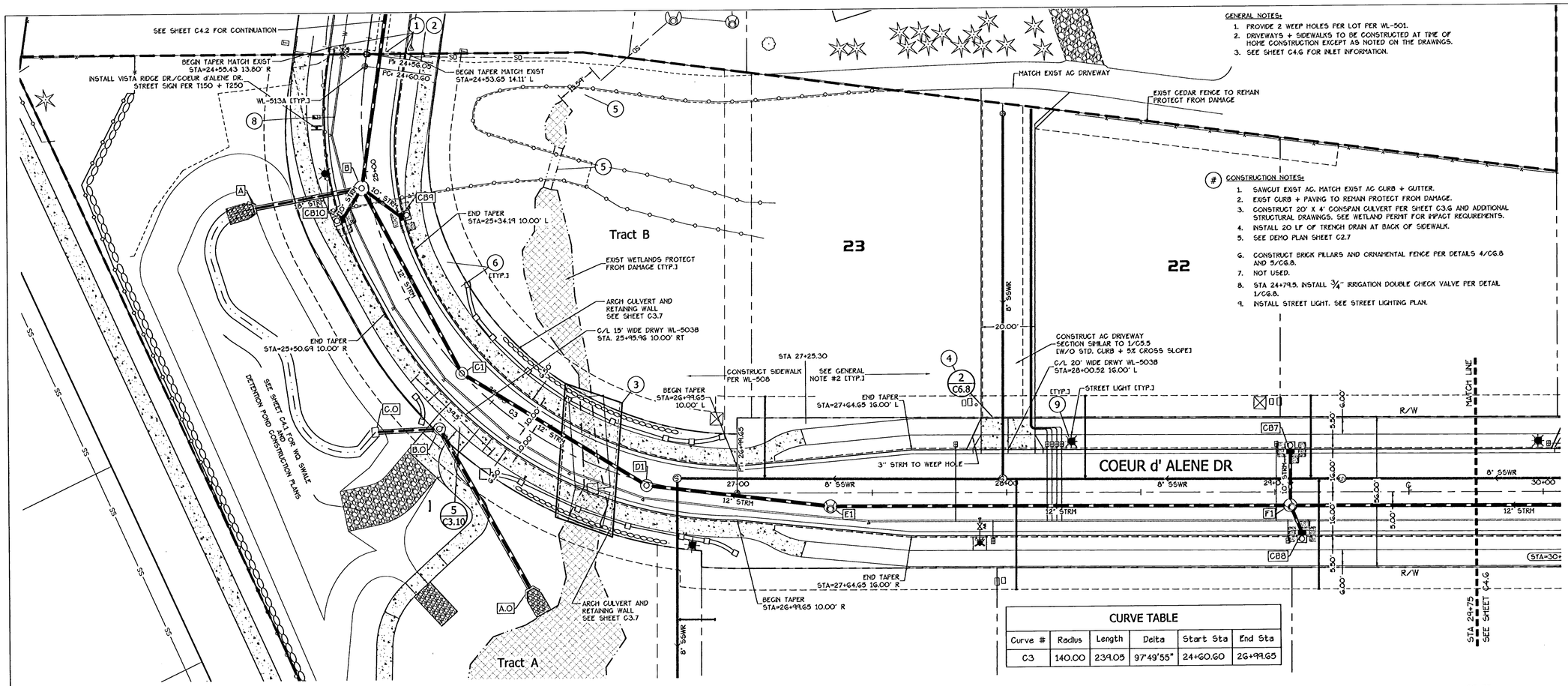

CURVE TABLE					
Curve #	Radius	Length	Delta	Start Sta	End Sta
C3	140.00	239.05	97°49'55"	24+60.60	26+99.65

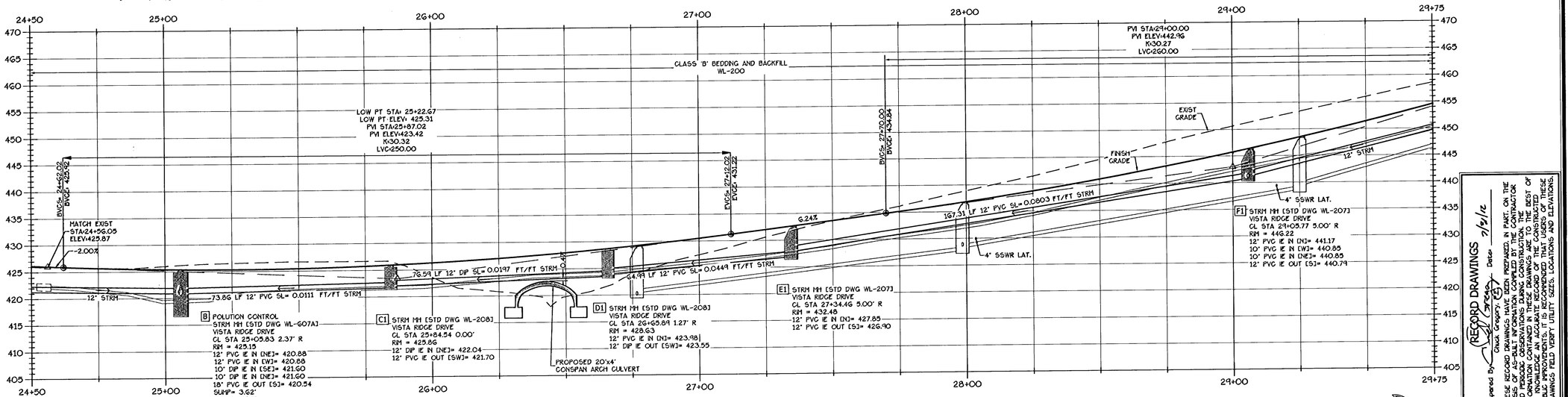

AS-BUILT NOTE:
PIPE LENGTH SHOWN IN PROFILE IS INSIDE EDGE OF MANHOLE TO INSIDE EDGE OF MANHOLE.

COEUR D' ALENE DRIVE PROFILE
STA 24+50 - 29+75
Horiz: 1"=20' Vert: 1"=10'

SEE SHEET C4.6 FOR INLET TABLE

RECORD DRAWINGS
Date 7/2/12
Prepared By: Chuck Gregory (CG)
THESE RECORD DRAWINGS WERE PREPARED IN PART, ON THE BASIS OF AS-BUILT INFORMATION COMPILED BY THE CONTRACTOR AND PERIODIC OBSERVATIONS DURING CONSTRUCTION. THE INFORMATION CONTAINED IN THESE DRAWINGS ARE, TO THE BEST OF MY KNOWLEDGE AND BELIEF, CORRECT AND COMPLETE. FOR PUBLIC IMPROVEMENTS, IT IS RECOMMENDED THAT USERS OF THESE DRAWINGS FIELD VERIFY UTILITY SIZES, LOCATIONS AND ELEVATIONS.

THE SAUNDERS COMPANY
DESIGN GROUP
901 N. Brutscher, Ste. 202
Newberg, Oregon 97132
Phone: 503-537-9347
www.thesaunderscompany.net

REGISTERED PROFESSIONAL ENGINEER 50944PE OREGON SEPT. 14, 1999 CHARLES EDWARD GREGORY
7/2/12
RENEWS: JUNE 30, 2013

J.T. SMITH companies

Teresa's Vineyard
Public Improvements
Sub-07-02/NDW-07-02/VAR-07-01
West Linn, Oregon

REV	DATE	SUMMARY
1	8/5/11	Agency/Client Comments
2	8/30/11	Agency Comments
4	10/10/11	Drwy revision per Client
	7/2/12	Add'l As Built
	1/27/12	As Built

Project #: 9130 Drawn: CL

COEUR d' ALENE DR STREET & STORM DRAINAGE PLAN & PROFILE

Date: April 15, 2011

C4.5

\\SERVER\Land Projects\9130\ENGINEERING\Construction Documents\Drawings\Permit Submittal\9130-STREET-STRM-PROFILE.dwg, 7/24/2012 9:49:13 AM, The Saunders Company

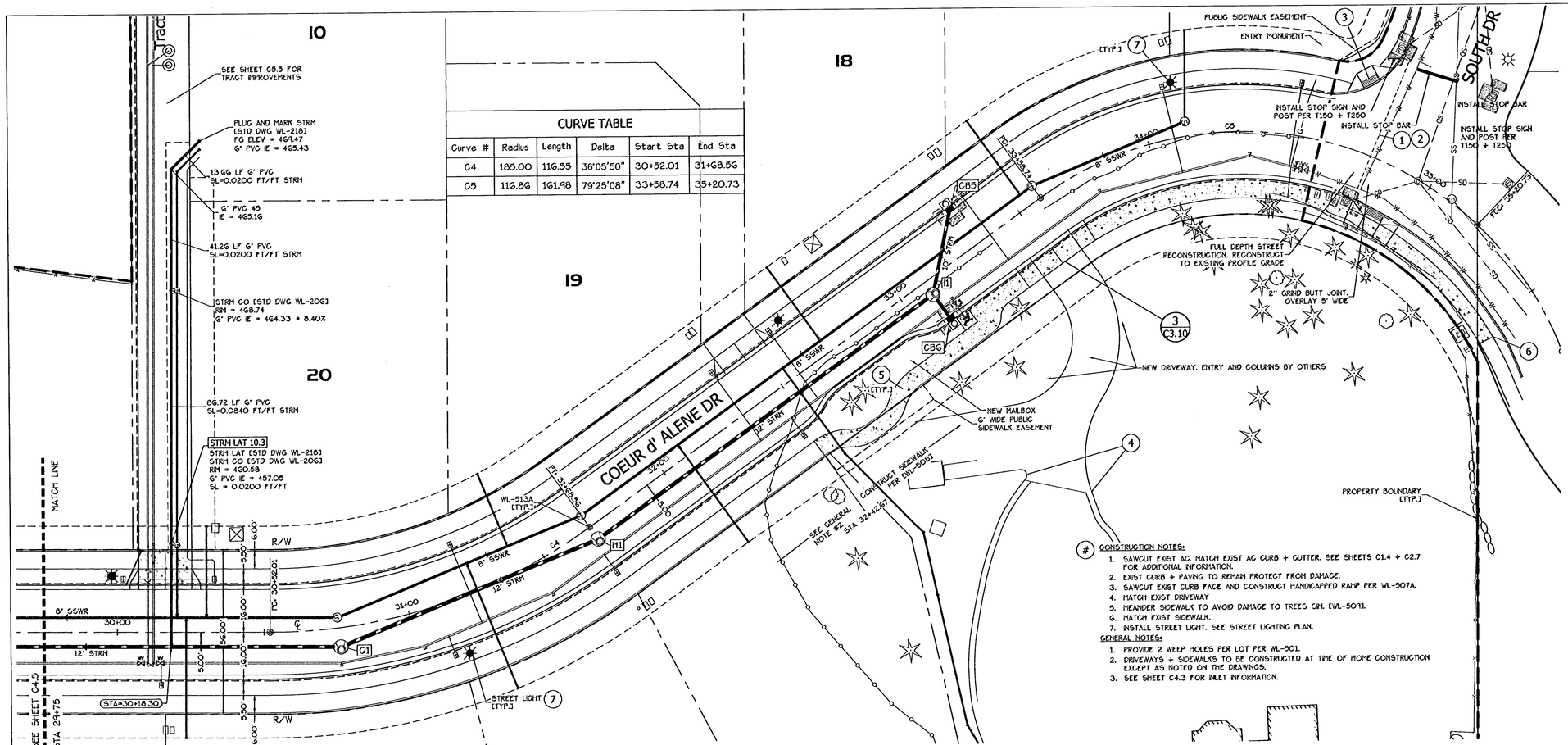

CURVE TABLE					
Curve #	Radius	Length	Delta	Start Sta	End Sta
C4	185.00	116.55	36°05'50"	30+52.01	31+68.56
C5	116.86	161.98	79°25'08"	33+58.74	35+20.73

(#) CONSTRUCTION NOTES:

1. SAWCUT EXIST AC. MATCH EXIST AC CURB + GUTTER. SEE SHEETS C1.4 + C2.7 FOR ADDITIONAL INFORMATION.
2. EXIST CURB + PAVING TO REMAIN PROTECT FROM DAMAGE.
3. SAWCUT EXIST CURB FACE AND CONSTRUCT HANDICAPPED RAMP PER WL-507A.
4. MATCH EXIST DRIVEWAY
5. MEANDER SIDEWALK TO AVOID DAMAGE TO TREES SIM. DWL-509.1.
6. MATCH EXIST SIDEWALK.
7. INSTALL STREET LIGHT. SEE STREET LIGHTING PLAN.

GENERAL NOTES:

1. PROVIDE 2 WEEP HOLES PER LOT PER WL-501.
2. DRIVEWAYS + SIDEWALKS TO BE CONSTRUCTED AT TIME OF HOME CONSTRUCTION EXCEPT AS NOTED ON THE DRAWINGS.
3. SEE SHEET C4.3 FOR INLET INFORMATION.

Inlet Table	
#	Structure Details
CB1	COMBO CURB INLET DWL-601.1 COEUR d'ALENE DRIVE STA 14+54.25 GRATE ELEV = 492.61 10" PVC IE = 488.66
CB2	COMBO CURB INLET DWL-601.1 COEUR d'ALENE DRIVE STA 14+54.98 GRATE ELEV = 492.76 10" PVC IE = 487.95
CB3	COMBO CURB INLET DWL-601.1 COEUR d'ALENE DRIVE STA 12+13.34 GRATE ELEV = 451.72 10" PVC IE = 447.63
CB4	COMBO CURB INLET DWL-601.1 COEUR d'ALENE DRIVE STA 12+01.59 GRATE ELEV = 451.46 10" PVC IE = 447.27
CB5	COMBO CURB INLET DWL-601.1 VISTA RIDGE DRIVE STA 33+31.46 GRATE ELEV = 506.46 10" PVC IE = 502.01
CB6	COMBO CURB INLET DWL-601.1 VISTA RIDGE DRIVE STA 33+01.81 GRATE ELEV = 503.24 10" PVC IE = 497.98
CB7	COMBO CURB INLET DWL-601.1 VISTA RIDGE DRIVE STA 29+05.78 GRATE ELEV = 445.86 10" PVC IE = 440.51
CB8	COMBO CURB INLET DWL-601.1 VISTA RIDGE DRIVE STA 29+10.14 GRATE ELEV = 446.33 10" PVC IE = 440.91
CB9	COMBO CURB INLET DWL-601.1 VISTA RIDGE DRIVE STA 25+19.98 GRATE ELEV = 424.84 10" DP IE = 422.14
CB10	COMBO CURB INLET DWL-601.1 VISTA RIDGE DRIVE STA 25+14.94 GRATE ELEV = 424.78 10" DP IE = 421.80

NOTE:
INLET GRATE ELEVATION IS NORMAL GUTTER FLOWLINE ELEVATION AT CENTER OF STRUCTURE.

Inlet Pipe Table		
#	Length	Slope FT/FT
CB1	19.75 LF	0.0440
CB2	10.44 LF	0.0172
CB3	18.96 LF	0.0269
CB4	7.40 LF	0.0176
CB5	29.53 LF	0.1263
CB6	10.09 LF	0.0297
CB7	20.09 LF	0.0199
CB8	11.00 LF	0.0055
CB9	18.05 LF	0.0299
CB10	13.38 LF	0.0149

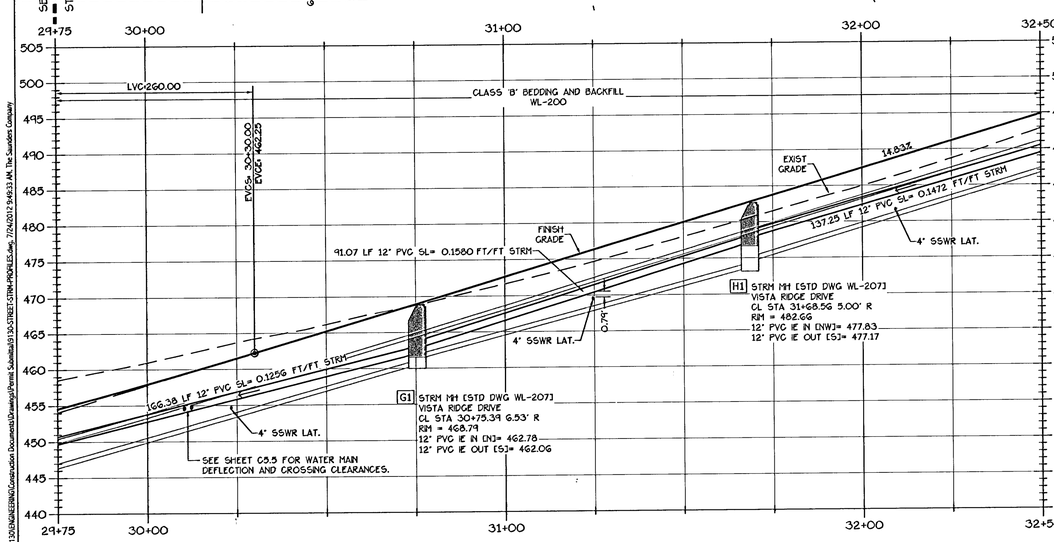

COEUR D' ALENE DRIVE PROFILE
STA 29+75 - 32+50
Horiz: 1"=20' Vert: 1"=10'

SEE SHEET C4.6 FOR INLET TABLE

AS-BUILT NOTE:
PIPE LENGTH SHOWN IN PROFILE IS INSIDE EDGE OF MANHOLE TO INSIDE EDGE OF MANHOLE.

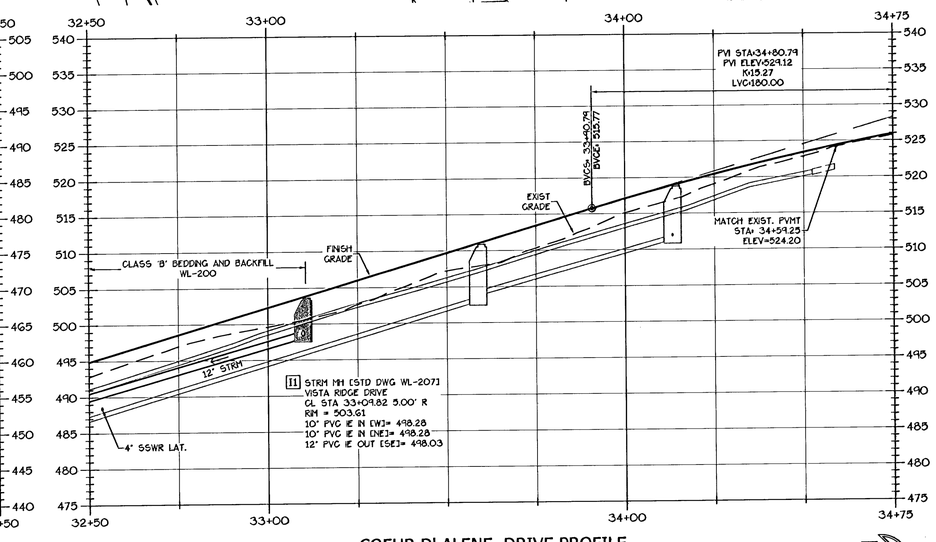

COEUR D' ALENE DRIVE PROFILE
STA 32+50 - 34+75
Horiz: 1"=20' Vert: 1"=10'

RECORD DRAWINGS
Prepared By: Chuck Gregory Date: 7/2/12
THESE RECORD DRAWINGS HAVE BEEN PREPARED IN PART, ON THE BASIS OF AS-BUILT INFORMATION COMPILED BY THE CONTRACTOR AND PERIODIC OBSERVATIONS DURING CONSTRUCTION. THE INFORMATION CONTAINED IN THESE DRAWINGS ARE NOT WARRANTED TO BE EXACT OR COMPLETE. IT IS RECOMMENDED THAT USERS OF THESE PUBLIC IMPROVEMENTS, AND ALL PARTIES CONSTRUCTING DRAWINGS FIELD VERIFY UTILITY SIZES, LOCATIONS AND ELEVATIONS.

DESIGN GROUP
THE SAUNDERS COMPANY
901 N. Brutscher, Ste. 202
Newberg, Oregon 97132
Phone: 503-537-9347
www.thesaunderscompany.net

7/2/12
REGISTERED PROFESSIONAL ENGINEER
50644PE
OREGON
SEPT. 14, 1993
CHARLES EDWARD GREGORY
RENEWS: JUNE 30, 2013

J.T. SMITH companies

Teresa's Vineyard
Public Improvements
Sub-07-02/NDW-07-02/VAR-07-01
West Linn, Oregon

REV	DATE	SUMMARY
1	8/5/11	CLIENT/AGENCY COMMENTS
2	8/30/11	Agency Comments
	7/2/12	Add'l As Built
	1/27/12	As Built

Project #: 9130 Drawn: CL

COEUR d' ALENE DR
STREET &
STORM DRAINAGE
PLAN & PROFILE

Date: April 15, 2011

C4.6

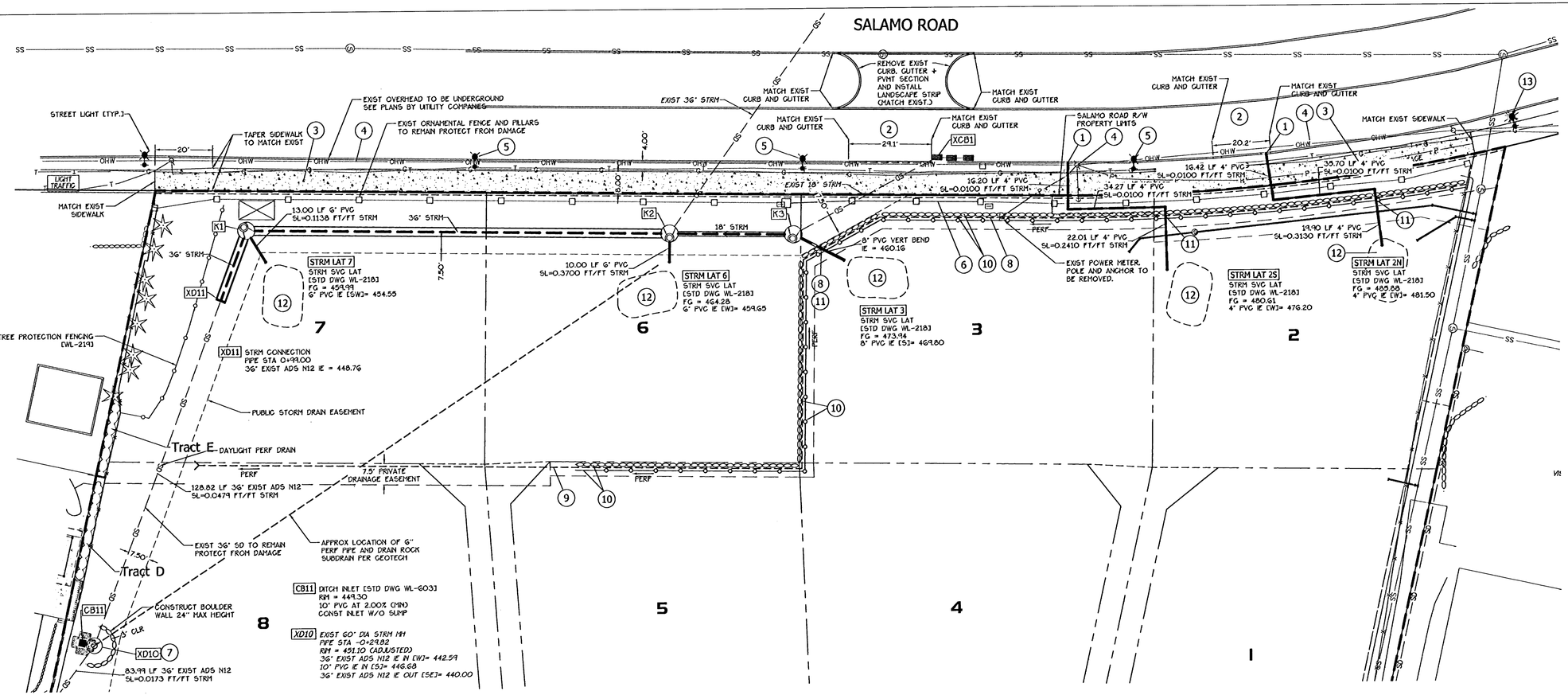

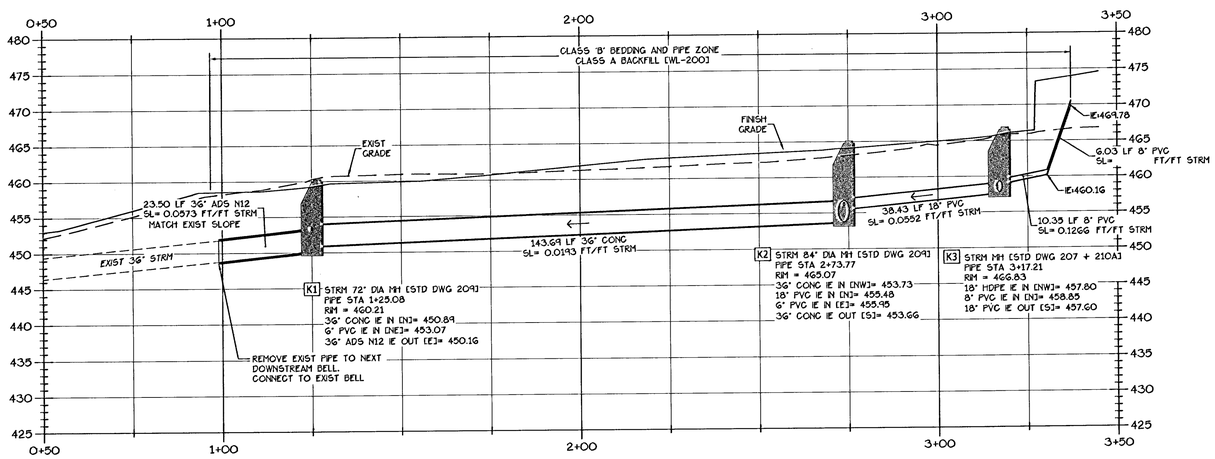

STORM DRAINAGE RE-ROUTE PROFILE

STA 0+50 - 3+50

Horiz: 1"=20' Vert: 1"=10'

AS-BUILT NOTE:

PIPE LENGTH SHOWN IN PROFILE IS INSIDE EDGE OF MANHOLE TO INSIDE EDGE OF MANHOLE.

(#) CONSTRUCTION NOTES:

1. SAWCUT EXIST CURB AT CURB FACE. CONSTRUCT NEW WEEP HOLE PER WL-501. INSTALL 4"x3" FERNCO ADAPTOR AT BACK OF CURB. NO STREET CUT SHALL BE ALLOW IN SALAMO ROAD. CONSTRUCT OF NEW CURB SHALL BE SET UP FROM BEHIND THE PAVEMENT. MIN. 3' CURB CUT WIDTH.
2. CONSTRUCT NEW CURB AND GUTTER PER WL-501 + WL-505.
3. CONSTRUCT 6' SIDEWALK PER WL-506.
4. EXIST OVERHEAD TO BE UNDERGROUNDED SEE FRANCHISE UTILITY PLANS.
5. INSTALL STREET LIGHT. SEE STREET LIGHTING PLAN.
6. CONSTRUCT NEW ORNAMENTAL FENCING AND BRICK PILLARS. SEE DETAILS 4 AND 5/C6.8.
7. ADJUST EXIST MANHOLE RIM TO GRADE. INSTALL TAMPER-PROOF LID PER WL-214.
8. CONNECT RETAINING WALL PERF PIPE TO STORM DRAIN.
9. DAYLIGHT RETAINING WALL PERF PIPE SEE SHEET C3.5.
10. CONSTRUCT RETAINING WALL AND FENCE. SEE SHEET C3.5.
11. INSTALL 5" MIN. DIP SLEEVE UNDER RETAINING WALL BLOCKS.
12. FUTURE RAIN GARDEN.
13. REMOVE EXISTING STREET LIGHT AND REPLACE WITH NEW LIGHT. SEE STREET LIGHTING PLAN.
14. REPLACE ANY DAMAGED CURB FACE AS DIRECTED BY CITY ENGINEER. MIN. 3' WIDE REMOVAL SECTIONS.

0 20' 40'

RECORD DRAWINGS

Prepared By Chuck Gregory Date: 7/31/12

Chuck Gregory, P.E.

THESE RECORD DRAWINGS HAVE BEEN PREPARED, IN PART, ON THE BASIS OF AS-BUILT INFORMATION COMPILED BY THE CONTRACTOR AND PERIODIC OBSERVATIONS DURING CONSTRUCTION. THE INFORMATION CONTAINED IN THESE DRAWINGS ARE TO THE BEST OF MY KNOWLEDGE AN ACCURATE RECORD OF THE CONSTRUCTED PUBLIC IMPROVEMENTS. IT IS RECOMMENDED THAT USERS OF THESE DRAWINGS FIELD VERIFY UTILITY SIZES, LOCATIONS AND ELEVATIONS.

THE SAUNDERS COMPANY
DESIGN GROUP
901 N. Brutscher, Ste. 202
Newberg, Oregon 97132
Phone: 503-537-9347
www.thesaunderscompany.net

7/31/12

REGISTERED PROFESSIONAL ENGINEER 50644PE OREGON SEPT. 14, 1989 CHARLES EDWARD GREGORY

RENEWS: JUNE 30, 2013

J.T. SMITH companies

Teresa's Vineyard
Public Improvements
Sub-07-02/NDW-07-02/VAR-07-01
West Linn, Oregon

REV	DATE	SUMMARY
1	8/5/11	Client/Agency Comments
2	8/30/11	Agency Comments
3	9/27/11	Per City Requirements
	7/2/12	Add'l As Built
	1/27/12	As Built

Project #: 9130 Drawn: CL

SALAMO ROAD & RE-ROUTED STORM DRAINAGE PLAN & PROFILE

Date: April 15, 2011

C4.7

\\SERVER\Local Projects\9130\DRAWINGS\Construction Documents\Drawings\Permit Submittal\9130-STREET-STRM-PROFILES.dwg, 7/24/2012 9:49:53 AM, The Saunders Company

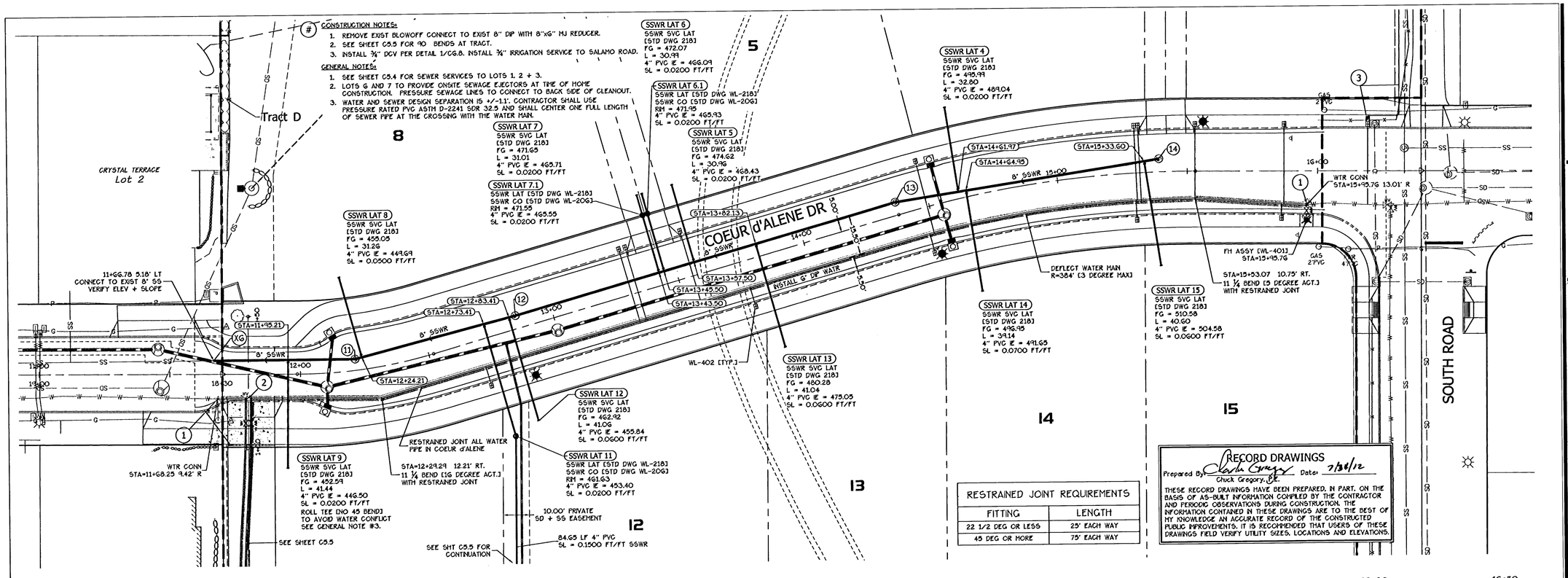

RESTRAINED JOINT REQUIREMENTS	
FITTING	LENGTH
22 1/2 DEG OR LESS	25' EACH WAY
45 DEG OR MORE	75' EACH WAY

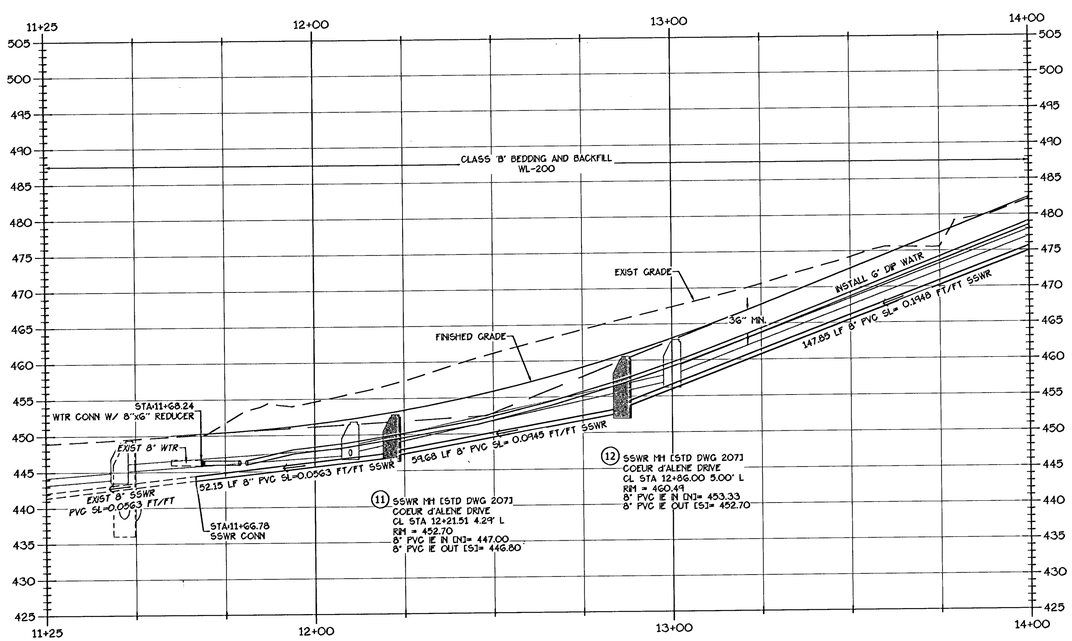

COEUR D'ALENE DRIVE (SOUTH) PROFILE
STA 11+25 - 14+00
Horiz: 1"=20' Vert: 1"=10'

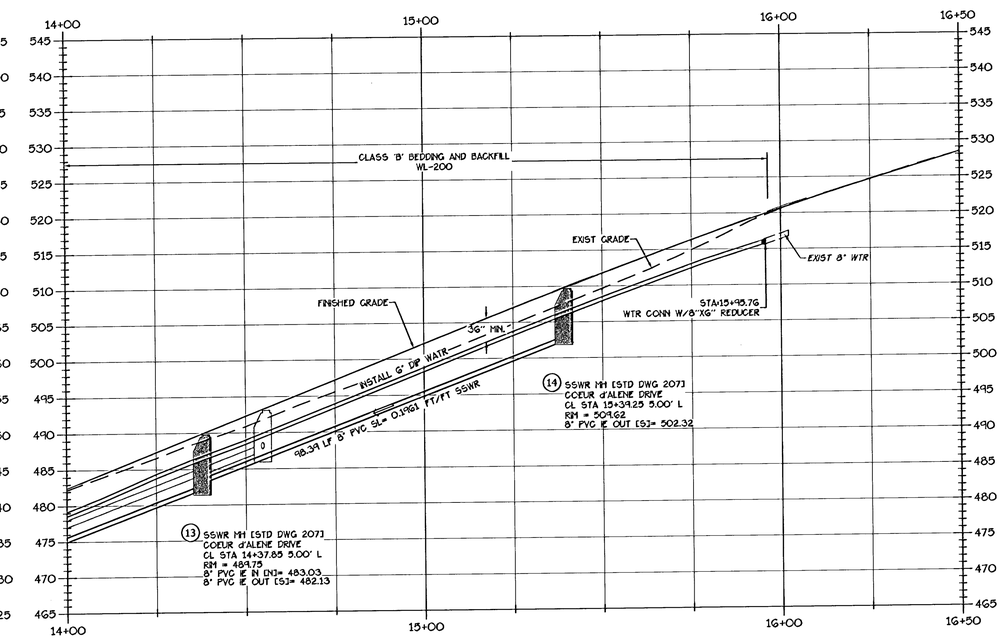

COEUR D'ALENE DRIVE (NORTH) PROFILE
STA 14+00 - 16+50
Horiz: 1"=20' Vert: 1"=10'

AS-BUILT NOTE:
PIPE LENGTH SHOWN IN PROFILE IS INSIDE EDGE OF MANHOLE TO INSIDE EDGE OF MANHOLE.

0 20' 40'

DESIGN GROUP
THE SAUNDERS COMPANY
901 N. Brutscher, Ste. 202
Newberg, Oregon 97132
Phone: 503-537-9347
www.thesaunderscompany.net

7/31/12
REGISTERED PROFESSIONAL ENGINEER
50644PE
OREGON
SEPT. 14, 1999
CHARLES EDWARD GREGORY
RENEWS: JUNE 30, 2013

J.T. SMITH companies

Teresa's Vineyard
Public Improvements
Sub-07-02/NDW-07-02/VAR-07-01
West Linn, Oregon

REV	DATE	SUMMARY
1	8/5/11	Client/Agency Comments
2	8/30/11	Agency Comments
	7/2/12	Add'l As Built
	1/27/12	As Built

Project #: 9130 Drawn: CL

COEUR d'ALENE DR
SANITARY SEWER
& WATER
PLAN & PROFILE

Date: April 15, 2011

C5.1

\\SERVER\Land Projects\9130\ENGINEERING\Construction Documents\Drawings\Permit Submittal\9130-SSWR-WATR-PROFILES.dwg, 7/24/2012 9:50:33 AM, The Saunders Company

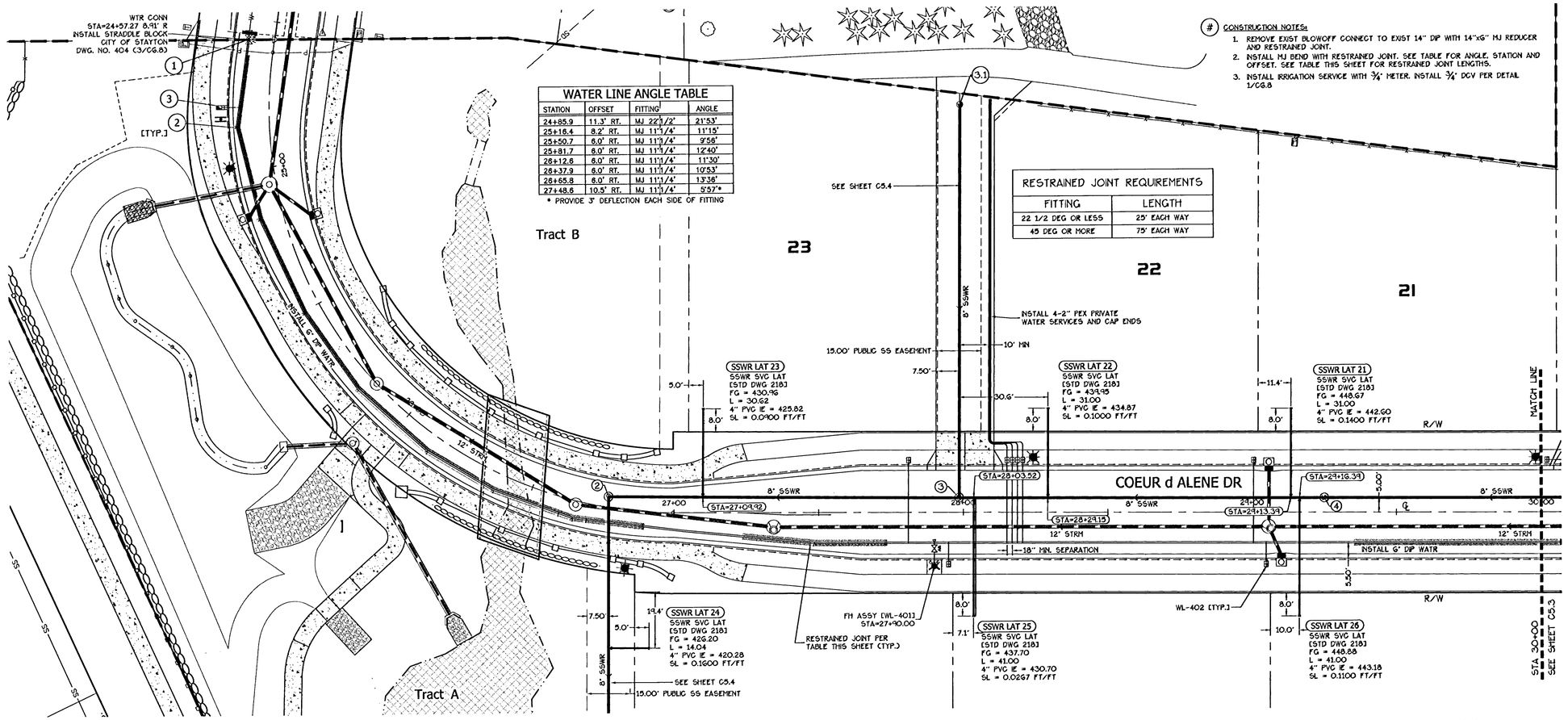

CONSTRUCTION NOTES:

1. REMOVE EXIST BLOWOFF CONNECT TO EXIST 14" DIP WITH 14"xG" MJ REDUCER AND RESTRAINED JOINT.
2. INSTALL MJ BEND WITH RESTRAINED JOINT. SEE TABLE FOR ANGLE, STATION AND OFFSET. SEE TABLE THIS SHEET FOR RESTRAINED JOINT LENGTHS.
3. INSTALL IRRIGATION SERVICE WITH 3/4" METER. INSTALL 3/4" DCV PER DETAIL 1/CG.8

WATER LINE ANGLE TABLE

STATION	OFFSET	FITTING	ANGLE
24+85.9	11.3' RT.	MJ 22 1/2°	21°53'
25+16.4	8.2' RT.	MJ 11 1/4°	11°15'
25+50.7	6.0' RT.	MJ 11 1/4°	9°58'
25+81.7	6.0' RT.	MJ 11 1/4°	12°40'
26+12.6	6.0' RT.	MJ 11 1/4°	11°30'
26+37.9	6.0' RT.	MJ 11 1/4°	10°53'
26+65.8	8.0' RT.	MJ 11 1/4°	13°38'
27+48.6	10.5' RT.	MJ 11 1/4°	5°57'*

* PROVIDE 3' DEFLECTION EACH SIDE OF FITTING

RESTRAINED JOINT REQUIREMENTS

FITTING	LENGTH
22 1/2 DEG OR LESS	25' EACH WAY
45 DEG OR MORE	75' EACH WAY

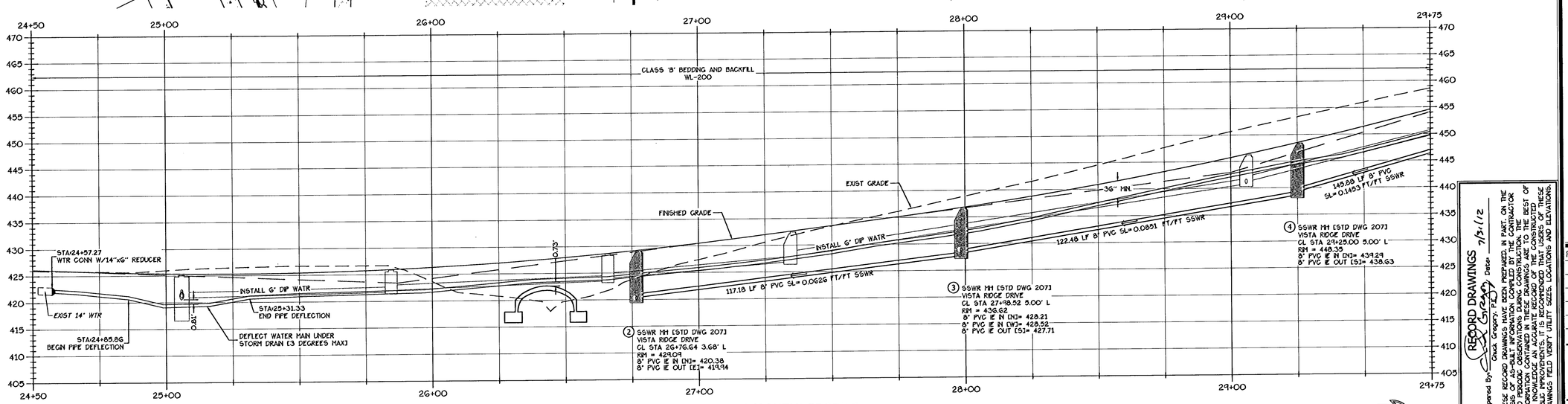

COEUR D' ALENE DRIVE (SOUTH) PROFILE

STA 24+50 - 29+75

Horiz: 1"=20' Vert: 1"=10'

AS-BUILT NOTE:

PIPE LENGTH SHOWN IN PROFILE IS INSIDE EDGE OF MANHOLE TO INSIDE EDGE OF MANHOLE.

RECORD DRAWINGS
Prepared By: Charles Gregory, P.E. Date: 7/31/12

THESE RECORD DRAWINGS WERE PREPARED IN PART, ON THE BASIS OF AS-BUILT INFORMATION COMPILED BY THE CONTRACTOR AND PERIODIC OBSERVATIONS DURING CONSTRUCTION. THE INFORMATION CONTAINED IN THESE DRAWINGS ARE CONSIDERED TO BE THE BEST OF MY KNOWLEDGE AND BELIEF AS CONSTRUCTED PUBLIC IMPROVEMENTS. IT IS RECOMMENDED THAT USERS OF THESE DRAWINGS FIELD VERIFY UTILITY SIZES, LOCATIONS AND ELEVATIONS.

0 20' 40'

THE SAUNDERS COMPANY
DESIGN GROUP
901 N. Brutscher, Ste. 202
Newberg, Oregon 97132
Phone: 503-537-9347
www.thesaunderscompany.net

7/31/12
REGISTERED PROFESSIONAL ENGINEER
50644PE
OREGON
SEPT. 14, 1995
CHARLES EDWARD GREGORY
RENEWS: JUNE 30, 2013

J.T. SMITH companies

Teresa's Vineyard
Public Improvements
Sub-07-02/NDW-07-02/VAR-07-01
West Linn, Oregon

REV	DATE	SUMMARY
1	8/5/11	Client/Agency Comments
2	8/30/11	Agency Comments
4	10/10/11	Drwy revision per Client
	7/2/12	Add'l As Built
	1/27/12	As Built

Project #: 9130 Drawn: CL

COEUR d' ALENE (S)
SANITARY SEWER
& WATER
PLAN & PROFILE

Date: April 15, 2011

C5.2

\\SERVER\Land Projects\9130\ENGINEERING\Construction Documents\Drawings\Permit Submittal\9130-SSWR-WATR-PROFILES.dwg, 7/24/2012 9:50:47 AM, The Saunders Company

(#) CONSTRUCTION NOTES:

1. REMOVE EXIST BLOWOFF CONNECT TO EXIST 8" DIP WITH 8"x6" MJ REDUCER.
2. INSTALL MJ BEND WITH RESTRAINED JOINT. SEE TABLE FOR ANGLE, STATION AND OFFSET. SEE TABLE THIS SHEET FOR RESTRAINED JOINT LENGTHS.
3. SEE SHEET C5.5 FOR 90 BENDS AT TRACT.

WATER LINE ANGLE TABLE			
STATION	OFFSET	FITTING	ANGLE
30+74.9	12.0' RT	MJ 22 1/2"	11°15'
31+01.8	12.0' RT	MJ 11 1/4"	11°15'
31+46.8	11.9' RT	MJ 11 1/4"	13°36'
33+78.0	9.0' RT	MJ 11 1/4"	22°30'
34+34.9	8.2' RT	MJ 11 1/4"	28°13'*

* PROVIDE 3' DEFLECTION EACH SIDE OF FITTING

RESTRAINED JOINT REQUIREMENTS	
FITTING	LENGTH
22 1/2 DEG OR LESS	25' EACH WAY
45 DEG OR MORE	75' EACH WAY

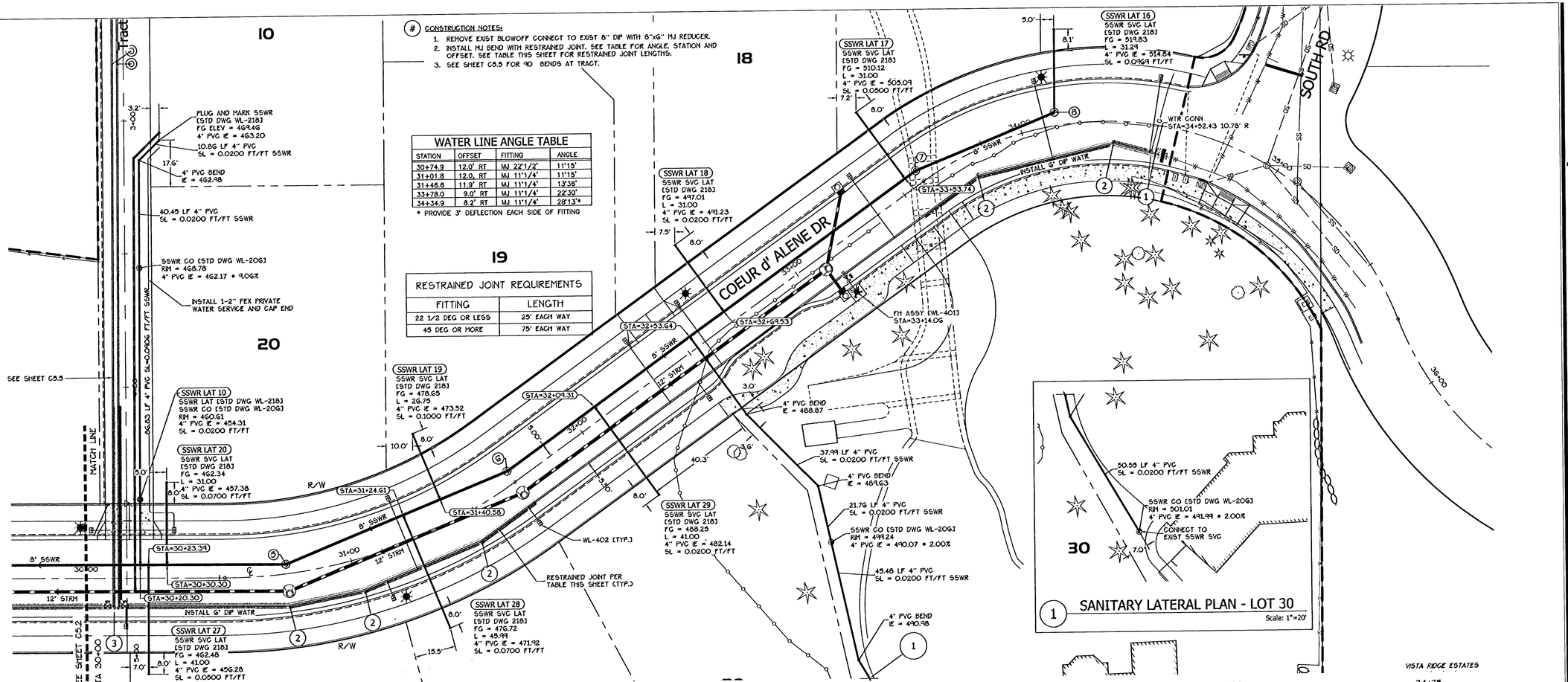

COEUR D' ALENE DRIVE (NORTH) PROFILE
STA 29+75 - 32+50
Horiz: 1"=20' Vert: 1"=10'

AS-BUILT NOTE:
PIPE LENGTH SHOWN IN PROFILE IS INSIDE EDGE OF MANHOLE TO INSIDE EDGE OF MANHOLE.

COEUR D' ALENE DRIVE (NORTH) PROFILE
STA 32+50 - 34+75
Horiz: 1"=20' Vert: 1"=10'

RECORD DRAWINGS
Prepared By: Charles Gregory, P.E. Date: 7/31/12
THESE RECORD DRAWINGS WERE PREPARED IN PART, ON THE BASIS OF AS-BUILT INFORMATION COMPILED BY THE CONTRACTOR AND PERIODIC OBSERVATIONS DURING CONSTRUCTION. THE INFORMATION CONTAINED IN THESE DRAWINGS ARE TO THE BEST OF MY KNOWLEDGE AS ACCURATE AS THE WORK WAS CONSTRUCTED. PUBLIC IMPROVEMENTS. IT IS RECOMMENDED THAT USERS OF THESE DRAWINGS FIELD VERIFY UTILITY SIZES, LOCATIONS AND ELEVATIONS.

DESIGN GROUP
THE SAUNDERS COMPANY
901 N. Brutscher, Ste. 202
Newberg, Oregon 97132
Phone: 503-537-9347
www.thesaunderscompany.net

7/31/12
REGISTERED PROFESSIONAL ENGINEER 59644PE Charles Gregory OREGON SEPT. 14, 1999 CHARLES EDWARD GREGORY
RENEWS: JUNE 30, 2013

J.T. SMITH companies

Teresa's Vineyard
Public Improvements
Sub-07-02/NDW-07-02/VAR-07-01
West Linn, Oregon

REV	DATE	SUMMARY
1	8/5/11	Client/Agency Comments
2	8/30/11	Agency Comments
	7/2/12	Add'l As Built
	1/27/12	As Built

Project #: 9130 Drawn: CL

COEUR d' ALENE (N)
SANITARY SEWER
& WATER
PLAN & PROFILE

Date: April 15, 2011

C5.3

\\SERVER\Land Projects\9130\ENGINEERING\Construction Documents\Drawings\Permit Submittal\9130-SSWR-WATR-PROFILES.dwg, 7/24/2012 9:51:52 AM, The Saunders Company

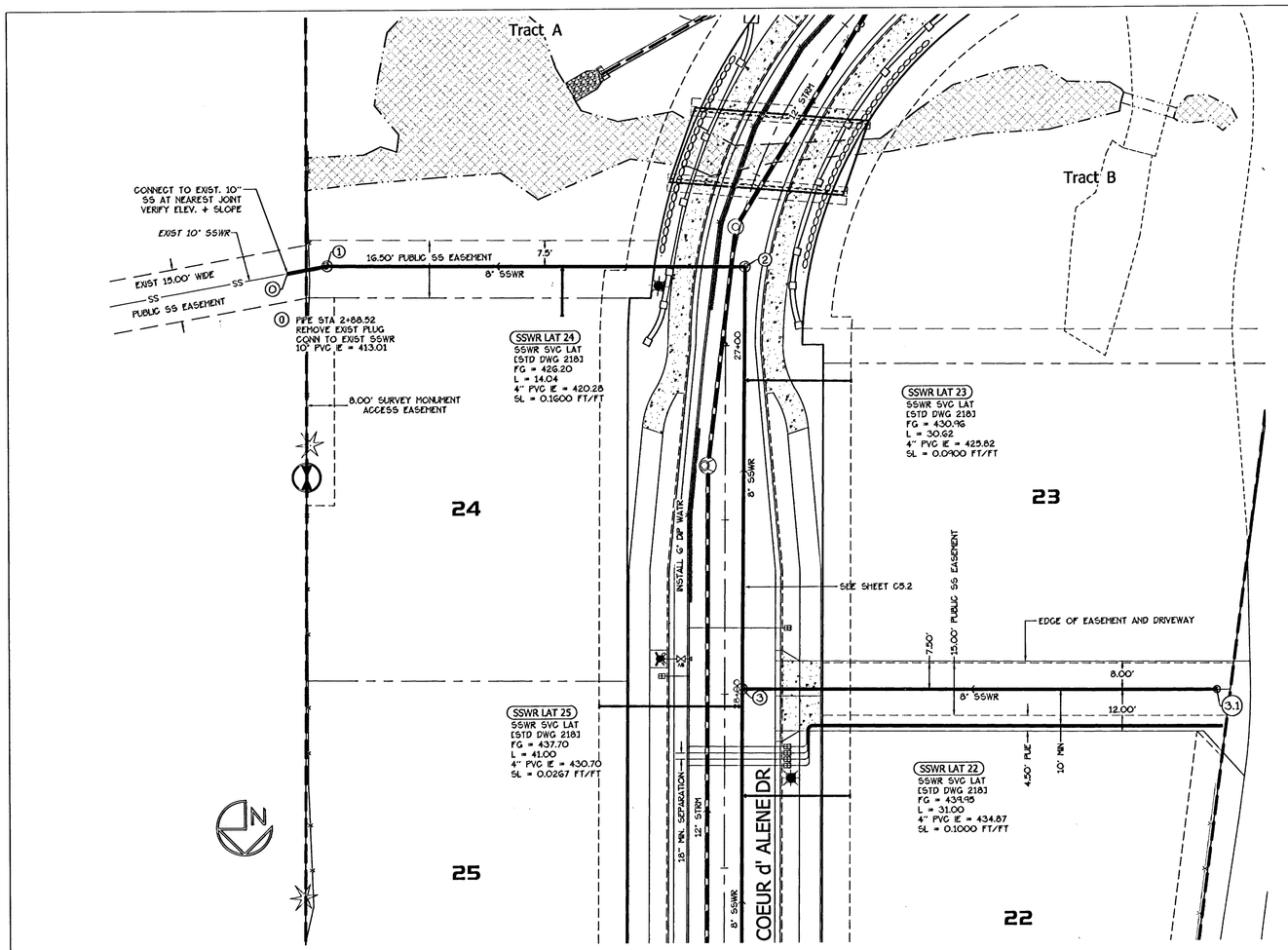

1 SANITARY CONNECTION & EXTENSION PLAN

Scale: 1"=20'

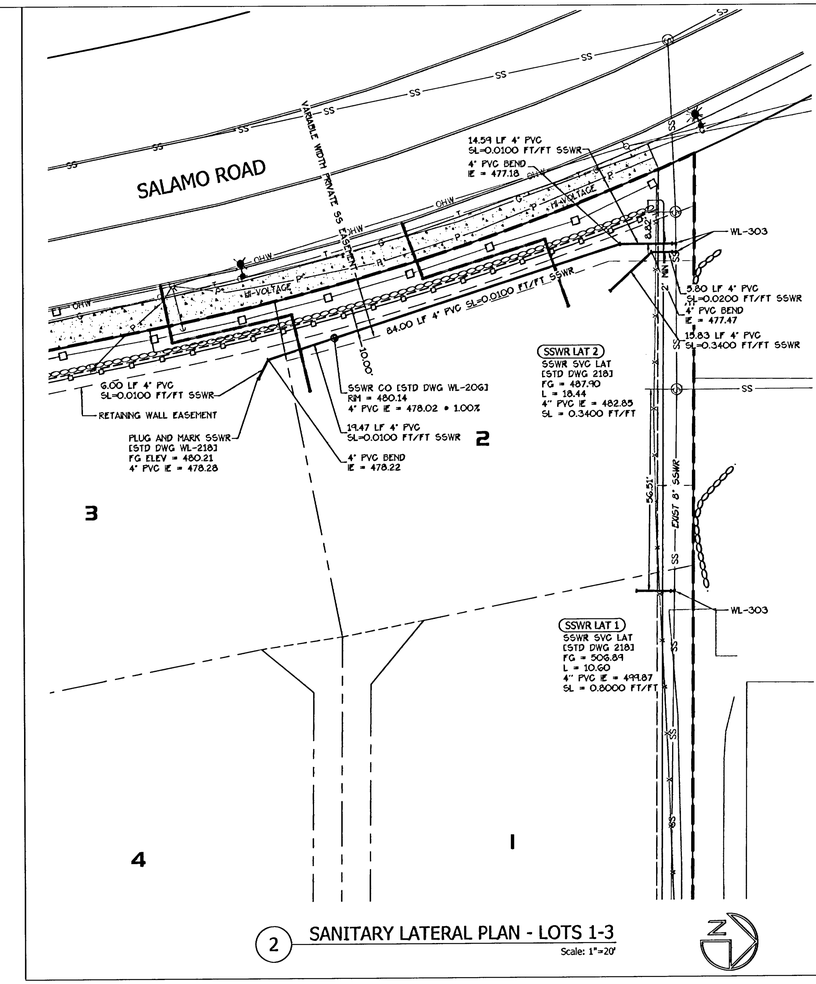

2 SANITARY LATERAL PLAN - LOTS 1-3

Scale: 1"=20'

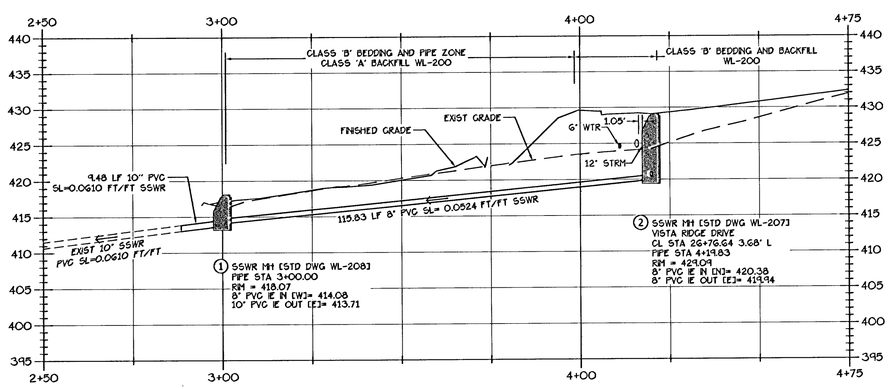

SANITARY SEWER CONNECTION PROFILE

STA 2+50 - 4+75

Horiz: 1"=20' Vert: 1"=10'

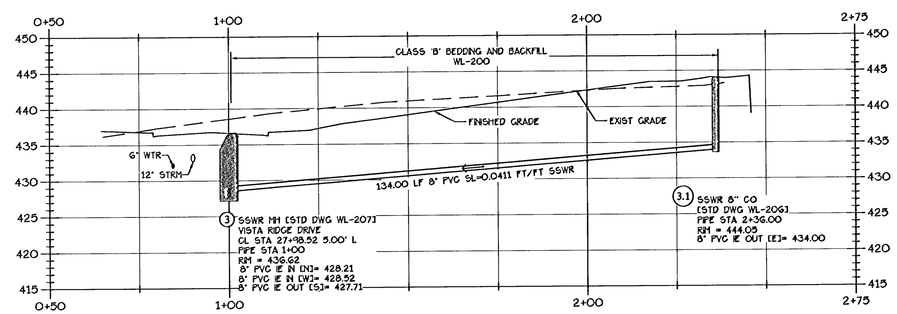

SANITARY SEWER EXTENSION PROFILE

STA 0+50 - 2+75

Horiz: 1"=20' Vert: 1"=10'

RECORD DRAWINGS

Prepared By: Chuck Gregory, P.E.U Date: 7/31/12

THESE RECORD DRAWINGS HAVE BEEN PREPARED, IN PART, ON THE BASIS OF AS-BUILT INFORMATION COMPILED BY THE CONTRACTOR AND PROVIDED TO THE ENGINEER. THE ENGINEER HAS RELIED ON THE INFORMATION CONTAINED IN SUCH REPORTS AND TO THE BEST OF MY KNOWLEDGE AN ACCURATE RECORD OF THE CONSTRUCTED PUBLIC IMPROVEMENTS. IT IS RECOMMENDED THAT USERS OF THESE DRAWINGS FIELD VERIFY UTILITY SIZES, LOCATIONS AND ELEVATIONS.

0 20' 40'

THE SAUNDERS COMPANY
DESIGN GROUP
901 N. Brutscher, Ste. 202
Newberg, Oregon 97132
Phone: 503-537-9347
www.thesaunderscompany.net

7/31/12

REGISTERED PROFESSIONAL ENGINEER
OREGON
SEPT. 14, 1993
CHARLES EDWARD GREGORY

RENEWS: JUNE 30, 2013

J.T. SMITH companies

Teresa's Vineyard
Public Improvements
Sub-07-02/NDW-07-02/VAR-07-01
West Linn, Oregon

REV	DATE	SUMMARY
1	8/5/11	Client/Agency Comments
2	8/30/11	Agency Comments
4	10/10/11	Drwy revision per Client
	7/2/12	Add'l As Built
	1/27/12	As Built

Project #: 9130 Drawn: CL

SANITARY SEWER EXTENSION & CONNECTION PLAN & PROFILE

Date: April 15, 2011

C5.4

U:\GDWEN\Land Projects\9130\DNE\DWG\Construction Documents\Drawings\Permit Submittal\9130-SSWR-WTR-PROFILES-C5-4.dwg, 7/24/2012 3:51:45 AM, The Saunders Company

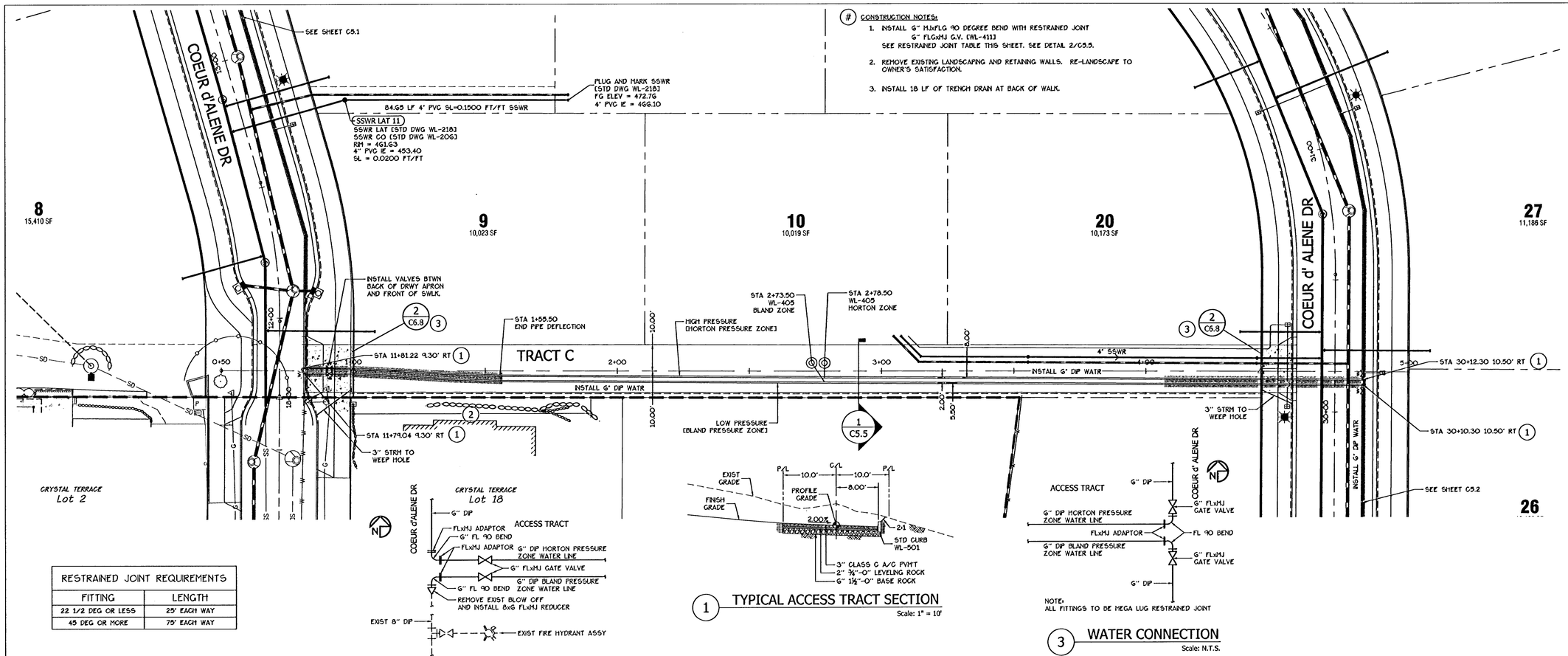

CONSTRUCTION NOTES:

1. INSTALL 6" MJxFLG 90 DEGREE BEND WITH RESTRAINED JOINT 6" FLGxMJ G.V. (WL-411) SEE RESTRAINED JOINT TABLE THIS SHEET. SEE DETAIL 2/C5.5.
2. REMOVE EXISTING LANDSCAPING AND RETAINING WALLS. RE-LANDSCAPE TO OWNER'S SATISFACTION.
3. INSTALL 18 LF OF TRENCH DRAIN AT BACK OF WALK.

RESTRAINED JOINT REQUIREMENTS	
FITTING	LENGTH
22 1/2 DEG OR LESS	25' EACH WAY
45 DEG OR MORE	75' EACH WAY

1 TYPICAL ACCESS TRACT SECTION
Scale: 1" = 10'

2 WATER CONNECTION
Scale: N.T.S.

3 WATER CONNECTION
Scale: N.T.S.

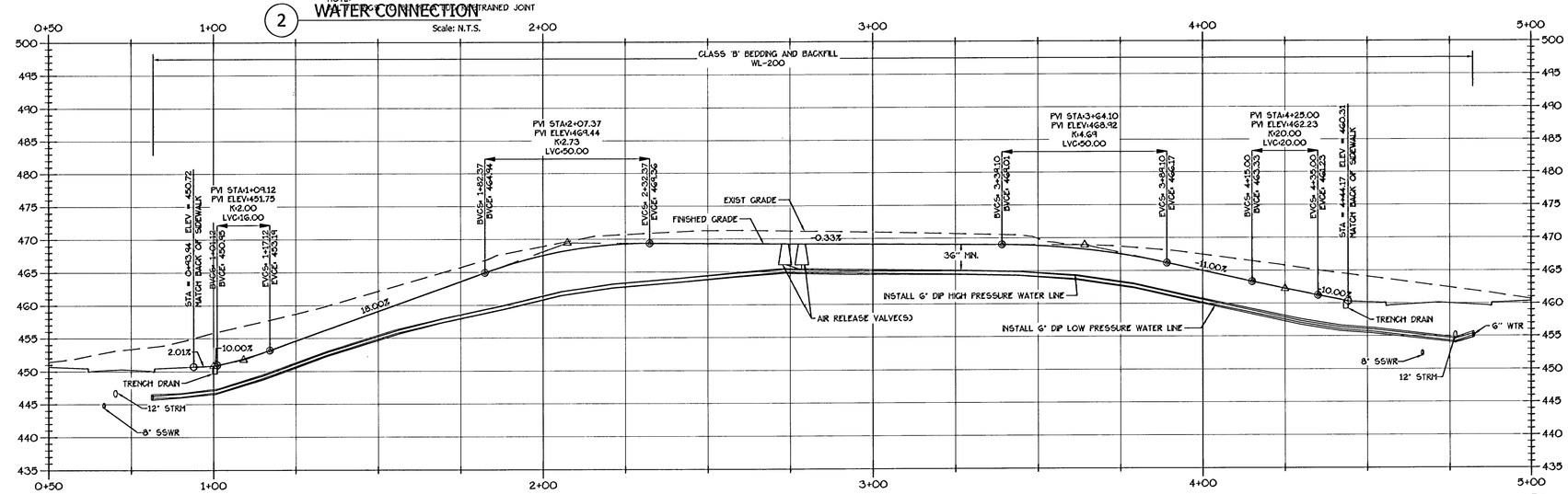

TRACT 4 ACCESS ROAD & WATER PROFILE
STA 0+50 - 5+00
Horiz: 1"=20' Vert: 1"=10'

RECORD DRAWINGS
Prepared by: Charles Gregory, P.E. Date: 7/31/12

THESE RECORD DRAWINGS HAVE BEEN PREPARED, IN PART, ON THE BASIS OF AS-BUILT INFORMATION PROVIDED BY THE CONTRACTOR AND OTHERS. ALTHOUGH THE DRAWINGS AND DATA IN THE BEST OF MY KNOWLEDGE AN ACCURATE RECORD OF THE CONSTRUCTED IMPROVEMENTS, THE CONTRACTOR IS RESPONSIBLE TO VERIFY THESE DRAWINGS FIELD VERIFY UTILITY SIZES, LOCATIONS AND ELEVATIONS.

DESIGN GROUP
THE SAUNDERS COMPANY
901 N. Brutscher, Ste. 202
Newberg, Oregon 97132
Phone: 503-537-9347
www.thesaunderscompany.net

7/31/12
REGISTERED PROFESSIONAL ENGINEER
50844PE
OREGON
SEPT. 14, 1993
CHARLES EDWARD GREGORY
RENEWS: JUNE 30, 2013

J.T. SMITH companies

Teresa's Vineyard
Public Improvements
Sub-07-02/NDW-07-02/VAR-07-01
West Linn, Oregon

REV	DATE	SUMMARY
1	8/5/11	Client/Agency Comments
2	8/30/11	Agency Comments
	7/2/12	Add'l As Built
	1/27/12	As Built

Project #: 9130 Drawn: CL

TRACT 4
WATER LINE & ACCESS ROAD PLAN & PROFILE

Date: April 15, 2011

C5.5

I:\SERVER\Land Projects\9130\ENGINEERING\Construction Documents\Drawings\Permit Submittals\9130-TRACT4-WATR-PROFILE-C5-5.dwg, 7/24/2012 9:53:22 AM, The Saunders Company

THIS DETAIL DRAWING SHALL NOT BE ALTERED OR CHANGED IN ANY MANNER EXCEPT BY THE CITY ENGINEER. IT IS THE RESPONSIBILITY OF THE USER TO ACQUIRE THE MOST CURRENT VERSION OF THE DETAIL.

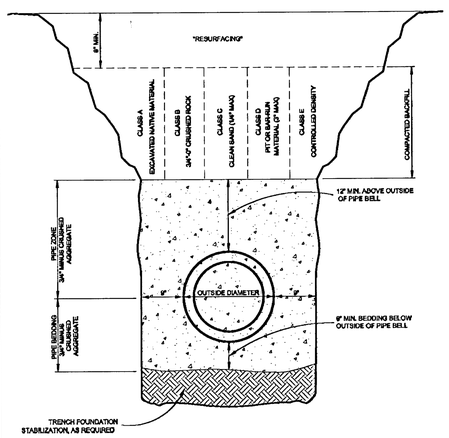

TRENCH BACKFILL BEDDING AND PIPE ZONE

City of West Linn | DATE: 2010 | DRAWING NO. WL-200 | FILE NO.

THIS DETAIL DRAWING SHALL NOT BE ALTERED OR CHANGED IN ANY MANNER EXCEPT BY THE CITY ENGINEER. IT IS THE RESPONSIBILITY OF THE USER TO ACQUIRE THE MOST CURRENT VERSION OF THE DETAIL.

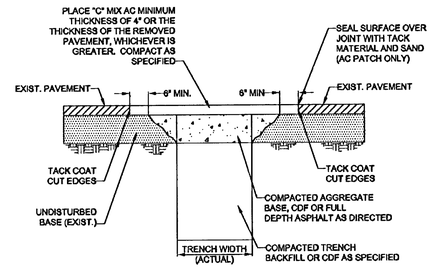

NOTE:

1. ALL EXISTING AC OR PCC PAVEMENT SHALL BE SAWCUT TO NEAT, STRAIGHT LINES PRIOR TO REPAVING.
2. CONCRETE PAVEMENT SHALL BE REPLACED WITH CONCRETE TO A MINIMUM THICKNESS OF REMOVED PAVEMENT, WHICHEVER IS GREATER.
3. IF EXISTING BASE MATERIAL IS CTB OR ATB, THEN REPLACEMENT BASE MATERIAL SHALL MATCH EXISTING.
4. ALL UTILITIES SHALL HAVE A MINIMUM COVER OF 36".
5. ALL TRENCH BACKFILL SHALL BE COMPACTED TO 95% OF MAXIMUM DENSITY PER AASHTO T-180 OR AS SPECIFIED IN THE CONTRACT DOCUMENTS.
6. ALL TRENCH BACKFILL AND PATCHING SHALL CONFORM TO THE STANDARDS AND SPECIFICATIONS OF THE CITY OF WEST LINN.
7. APPROVED CDF SHALL BE USED OR 3/4 - 0" GRAVEL BACKFILL SHALL BE PLACED AND COMPACTED IN 12" MAXIMUM LIFTS. IF 3/4-0" GRAVEL BACKFILL IS USED, COMPACTION TESTING BY A CERTIFIED TESTING COMPANY IS REQUIRED AT DEPTH INTERVALS AS SPECIFIED BY THE CITY ENGINEER.
8. T-CUT MAY BE ENLARGED AT THE DISCRETION OF THE CITY ENGINEER OR CITY INSPECTOR DUE TO SITE CONDITIONS OR PROJECT REQUIREMENTS.
9. ALL CUT EDGES SHALL BE SAND SEALED.
10. COMPACTED BACKFILL OR CDF MUST EXTEND 2 FEET OUTSIDE OF PAVEMENT SURFACE.

STREET T-CUT

City of West Linn | DATE: 2010 | DRAWING NO. WL-203 | FILE NO.

THIS DETAIL DRAWING SHALL NOT BE ALTERED OR CHANGED IN ANY MANNER EXCEPT BY THE CITY ENGINEER. IT IS THE RESPONSIBILITY OF THE USER TO ACQUIRE THE MOST CURRENT VERSION OF THE DETAIL.

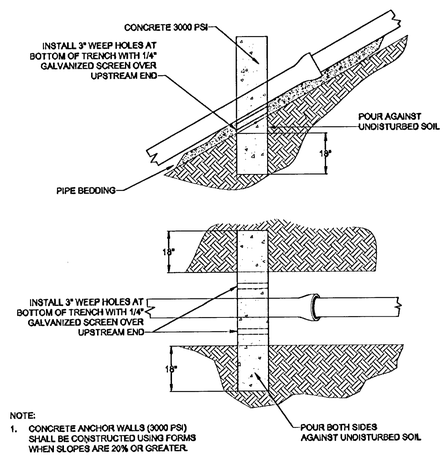

NOTE:

1. CONCRETE ANCHOR WALLS (3000 PSI) SHALL BE CONSTRUCTED USING FORMS WHEN SLOPES ARE 20% OR GREATER.
2. REMOVE FORMS PRIOR TO BACKFILLING TRENCH.

SLOPE	MIN. ANCHOR SPACING CENTER TO CENTER
0.20 - 0.34	35'
0.35 - 0.50	25'
0.51+	CONC. 15' OR ENCASEMENT

ANCHOR WALL

City of West Linn | DATE: 2010 | DRAWING NO. WL-205A | FILE NO.

THIS DETAIL DRAWING SHALL NOT BE ALTERED OR CHANGED IN ANY MANNER EXCEPT BY THE CITY ENGINEER. IT IS THE RESPONSIBILITY OF THE USER TO ACQUIRE THE MOST CURRENT VERSION OF THE DETAIL.

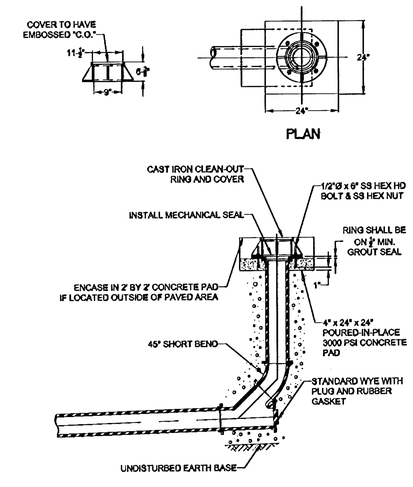

RECORD DRAWINGS

Prepared By: Chuck Gregory, P.E. Date:

THESE RECORD DRAWINGS HAVE BEEN PREPARED, IN PART, ON THE BASIS OF AS-BUILT INFORMATION SUPPLIED BY THE CONTRACTOR AND PERIODIC OBSERVATIONS DURING CONSTRUCTION. THE INFORMATION CONTAINED IN THESE DRAWINGS ARE TO THE BEST OF MY KNOWLEDGE AN ACCURATE RECORD OF THE CONSTRUCTED PUBLIC IMPROVEMENTS. IT IS RECOMMENDED THAT USERS OF THESE DRAWINGS FIELD VERIFY UTILITY SIZES, LOCATIONS AND ELEVATIONS.

STANDARD CLEAN OUT

City of West Linn | DATE: 2010 | DRAWING NO. WL-206 | FILE NO.

THIS DETAIL DRAWING SHALL NOT BE ALTERED OR CHANGED IN ANY MANNER EXCEPT BY THE CITY ENGINEER. IT IS THE RESPONSIBILITY OF THE USER TO ACQUIRE THE MOST CURRENT VERSION OF THE DETAIL.

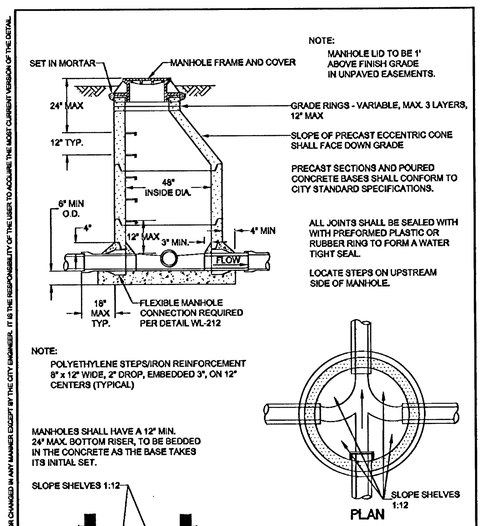

NOTE:
MANHOLE LID TO BE 1' ABOVE FINISH GRADE IN UNPAVED EASEMENTS.

PRECAST SECTIONS AND POURED CONCRETE BASES SHALL CONFORM TO CITY STANDARD SPECIFICATIONS.

ALL JOINTS SHALL BE SEALED WITH WITH PREFORMED PLASTIC OR RUBBER RING TO FORM A WATER TIGHT SEAL.

LOCATE STEPS ON UPSTREAM SIDE OF MANHOLE.

NOTE:
POLYETHYLENE STEPS/IRON REINFORCEMENT 8" x 12" WIDE, 2" DROP, EMBEDDED 3", ON 12" CENTERS (TYPICAL)

MANHOLES SHALL HAVE A 12" MIN. 24" MAX. BOTTOM RISER, TO BE BEDDED IN THE CONCRETE AS THE BASE TAKES ITS INITIAL SET.

NOTE:
CHANNELS MUST BE ABLE TO PASS A 7"X30" CYLINDER INTO PIPES. SHELF SHALL NOT BE BELOW THE TOP OF THE PIPE.

STANDARD MANHOLE FOR LESS THAN 36" PIPE

City of West Linn | DATE: 2010 | DRAWING NO. WL-207 | FILE NO.

THIS DETAIL DRAWING SHALL NOT BE ALTERED OR CHANGED IN ANY MANNER EXCEPT BY THE CITY ENGINEER. IT IS THE RESPONSIBILITY OF THE USER TO ACQUIRE THE MOST CURRENT VERSION OF THE DETAIL.

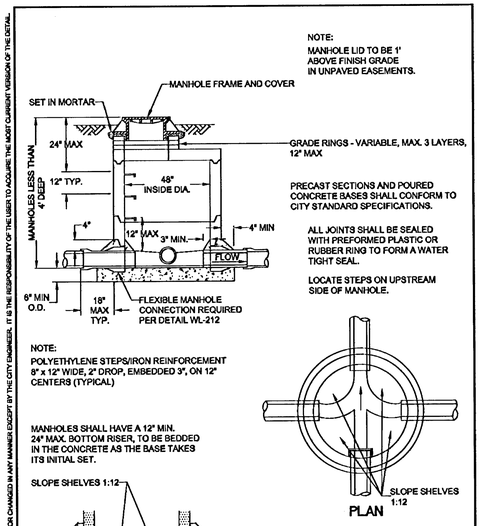

NOTE:
MANHOLE LID TO BE 1' ABOVE FINISH GRADE IN UNPAVED EASEMENTS.

PRECAST SECTIONS AND POURED CONCRETE BASES SHALL CONFORM TO CITY STANDARD SPECIFICATIONS.

ALL JOINTS SHALL BE SEALED WITH PREFORMED PLASTIC OR RUBBER RING TO FORM A WATER TIGHT SEAL.

LOCATE STEPS ON UPSTREAM SIDE OF MANHOLE.

NOTE:
POLYETHYLENE STEPS/IRON REINFORCEMENT 8" x 12" WIDE, 2" DROP, EMBEDDED 3", ON 12" CENTERS (TYPICAL)

MANHOLES SHALL HAVE A 12" MIN. 24" MAX. BOTTOM RISER, TO BE BEDDED IN THE CONCRETE AS THE BASE TAKES ITS INITIAL SET.

NOTE:
CHANNELS MUST BE ABLE TO PASS A 7"X30" CYLINDER INTO PIPES. SHELF SHALL NOT BE BELOW THE TOP OF THE PIPE.

SHALLOW MANHOLE FOR LESS THAN 36" PIPE

City of West Linn | DATE: 2010 | DRAWING NO. WL-208 | FILE NO.

THIS DETAIL DRAWING SHALL NOT BE ALTERED OR CHANGED IN ANY MANNER EXCEPT BY THE CITY ENGINEER. IT IS THE RESPONSIBILITY OF THE USER TO ACQUIRE THE MOST CURRENT VERSION OF THE DETAIL.

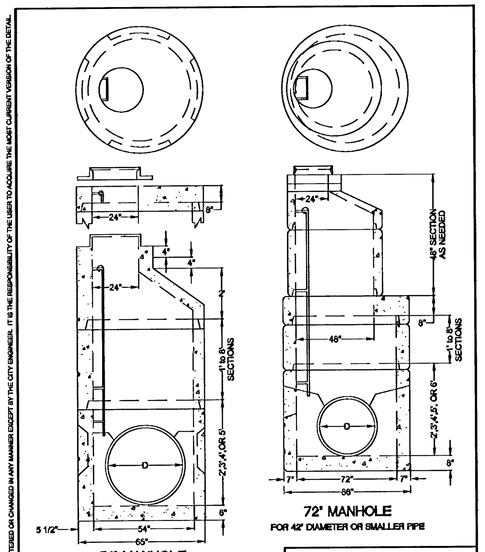

NOTE:
STANDARD MANHOLE STEPS OR LADDERS SHALL BE INSTALLED

OVERSIZE MANHOLE

City of West Linn | DATE: 2010 | DRAWING NO. WL-209 | FILE NO.

THIS DETAIL DRAWING SHALL NOT BE ALTERED OR CHANGED IN ANY MANNER EXCEPT BY THE CITY ENGINEER. IT IS THE RESPONSIBILITY OF THE USER TO ACQUIRE THE MOST CURRENT VERSION OF THE DETAIL.

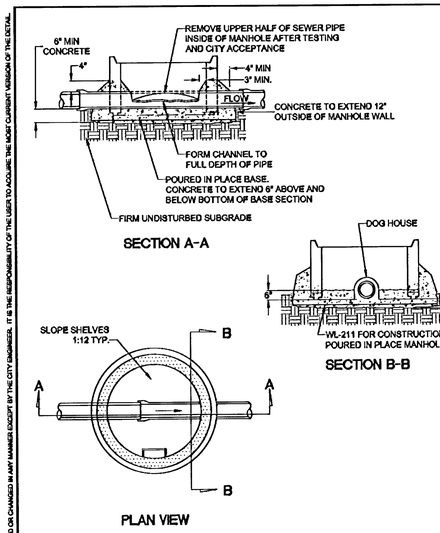

NOTE:

1. BOTTOM RISER TO BE BEDDED IN THE CAST-IN-PLACE AS THE BASE TAKES IT'S INITIAL SET. SET FOR 24 HOUR MIN. OR UNTIL CONCRETE HAS CURED SUFFICIENTLY BEFORE ADDING ADDITIONAL RISERS.
2. 3" TO 6" CLEARANCE BETWEEN BOTTOM RISER SECTION AND TOP OF PIPE. RISER SECTION MUST BE CAST TO ACCOMODATE PIPE (DOG HOUSE) NO SAWING OR OR BREAKING OF RISER WILL BE ALLOWED.
3. REMOVE TOP OF PIPE ONLY AFTER TESTING AND ACCEPTED BY CITY.

NEW MANHOLE TO EXISTING PVC SEWER LINE CONNECTION

City of West Linn | DATE: 2010 | DRAWING NO. WL-210A | FILE NO.

THIS DETAIL DRAWING SHALL NOT BE ALTERED OR CHANGED IN ANY MANNER EXCEPT BY THE CITY ENGINEER. IT IS THE RESPONSIBILITY OF THE USER TO ACQUIRE THE MOST CURRENT VERSION OF THE DETAIL.

DESIGN GROUP
THE SAUNDERS COMPANY
901 N. Brutscher, Ste. 202
Newberg, Oregon 97132
Phone: 503-537-9347
www.thesaunderscompany.net

7/11/12
REGISTERED PROFESSIONAL ENGINEER
56641PE
OREGON
SEPT. 14, 1993
CHARLES EDWARD GREGORY
RENEWS: JUNE 30, 2013

J.T. SMITH companies

Teresa's Vineyard
Public Improvements
Sub-07-02/NDW-07-02/VAR-07-01
West Linn, Oregon

REV	DATE	SUMMARY
1	8/5/11	Client/Agency Comments
	7/2/12	Add'l As Built
	1/27/12	As Built

Project #: 9130 Drawn: CL

CITY OF WEST LINN STANDARD PLANS AND DETAILS GENERAL

Date: April 15, 2011

C6.1

\\SERVER\Land Projects\9130\ENGINEERING\Construction Documents\Drawings\Permit Submittal\9130-DETAILS.dwg, 7/24/2012 9:52:46 AM, The Saunders Company

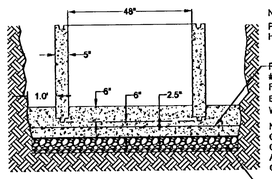

NOTE:
PIPE CONNECTIONS MUST HAVE FLEXIBLE CONNECTIONS

REINFORCING SHALL BE #5 BARS @ 12" O.C. E.W. REINFORCING TO EXTEND 1'-0" BEYOND VERTICAL MANHOLE WALLS

NOTE:
CONCRETE TO EXTEND 12" OUTSIDE OF MANHOLE WALL AND 6" ABOVE THE BOTTOM OF THE BASE SECTION

6" COMPACTED CRUSHED ROCK BASE

POURED IN PLACE MANHOLE BASE

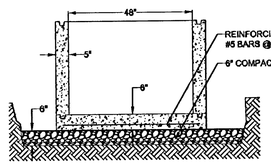

REINFORCING SHALL BE #5 BARS @ 12" O.C.E.W.

6" COMPACTED CRUSHED ROCK

PRECAST MANHOLE BASE

NOTE:
USE 3300 PSI CONCRETE FOR EITHER MANHOLE BASE.
CONCRETE SHALL CONFORM TO SECTION 205. PRECAST MANHOLES SHALL CONFORM TO ASTM C478.

THIS DETAIL DRAWING SHALL NOT BE ALTERED OR CHANGED IN ANY MANNER EXCEPT BY THE CITY ENGINEER. IT IS THE RESPONSIBILITY OF THE USER TO ACQUIRE THE MOST CURRENT VERSION OF THE DETAIL.

MANHOLE BASE

City of West Linn | DATE: 2010 | DRAWING NO. WL-211 | FILE NO.

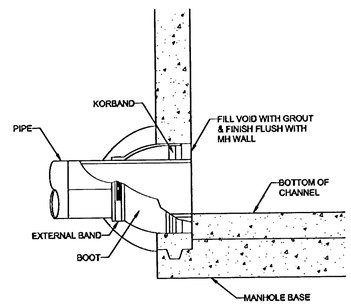

FLEXIBLE MANHOLE CONNECTION
(KOR-N-SEAL OR APPROVED EQUAL)

THIS DETAIL DRAWING SHALL NOT BE ALTERED OR CHANGED IN ANY MANNER EXCEPT BY THE CITY ENGINEER. IT IS THE RESPONSIBILITY OF THE USER TO ACQUIRE THE MOST CURRENT VERSION OF THE DETAIL.

FLEXIBLE MANHOLE CONNECTION

City of West Linn | DATE: 2010 | DRAWING NO. WL-212 | FILE NO.

RECORD DRAWINGS

Prepared By: Chuck Gregory, P.E. Date:

THESE RECORD DRAWINGS HAVE BEEN PREPARED, IN PART, ON THE BASIS OF AS-BUILT INFORMATION COMPILED BY THE CONTRACTOR AND PERIODIC OBSERVATIONS DURING CONSTRUCTION. THE INFORMATION CONTAINED IN THESE DRAWINGS ARE TO THE BEST OF MY KNOWLEDGE AN ACCURATE RECORD OF THE CONSTRUCTED PUBLIC IMPROVEMENTS. IT IS RECOMMENDED THAT USERS OF THESE DRAWINGS FIELD VERIFY UTILITY SIZES, LOCATIONS AND ELEVATIONS.

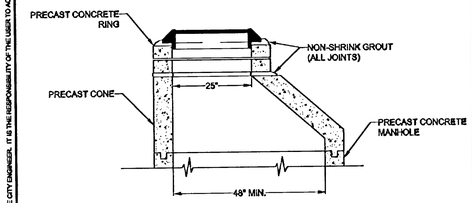

PRECAST RING EXTENSION
FOR TYPICAL MANHOLE

THIS DETAIL DRAWING SHALL NOT BE ALTERED OR CHANGED IN ANY MANNER EXCEPT BY THE CITY ENGINEER. IT IS THE RESPONSIBILITY OF THE USER TO ACQUIRE THE MOST CURRENT VERSION OF THE DETAIL.

PRECAST RING EXTENSION

City of West Linn | DATE: 2010 | DRAWING NO. WL-213 | FILE NO.

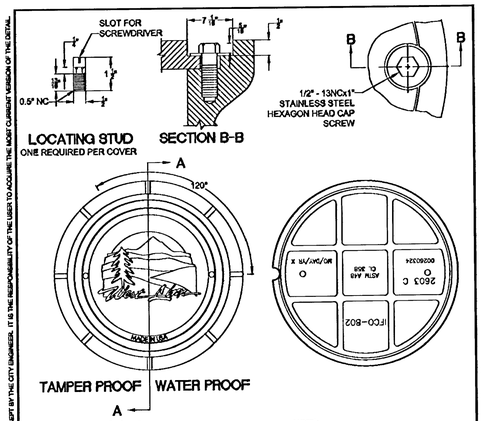

NOTE:
1. COVER AND FRAME TO BE MACHINED TO A TRUE BEARING ALL AROUND
2. MATERIAL SHALL BE OF GRAY CAST IRON A.S.T.M. A-48 CLASS 30
3. 2 HOLE LID FOR SANITARY SEWER
4. 16 HOLE LID FOR STORM SEWER

THIS DETAIL DRAWING SHALL NOT BE ALTERED OR CHANGED IN ANY MANNER EXCEPT BY THE CITY ENGINEER. IT IS THE RESPONSIBILITY OF THE USER TO ACQUIRE THE MOST CURRENT VERSION OF THE DETAIL.

WATERPROOF AND TAMPERPROOF MANHOLE FRAME AND COVER

City of West Linn | DATE: 2010 | DRAWING NO. WL-214 | FILE NO.

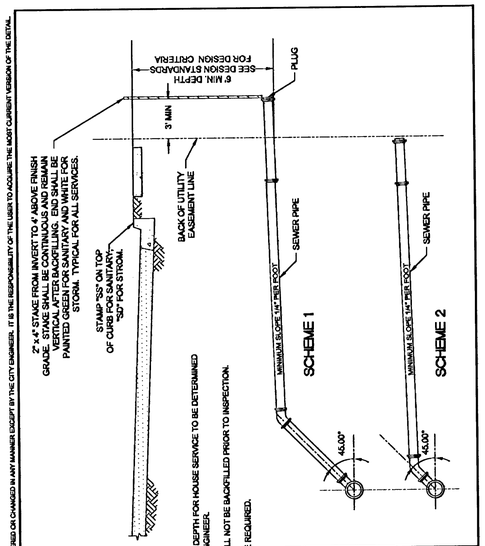

NOTE:
1. SCHEME AND DEPTH FOR HOUSE SERVICE TO BE DETERMINED BY DESIGN ENGINEER.
2. SERVICE SHALL NOT BE BACKFILLED PRIOR TO INSPECTION.
3. TRACER WIRE REQUIRED.

THIS DETAIL DRAWING SHALL NOT BE ALTERED OR CHANGED IN ANY MANNER EXCEPT BY THE CITY ENGINEER. IT IS THE RESPONSIBILITY OF THE USER TO ACQUIRE THE MOST CURRENT VERSION OF THE DETAIL.

SERVICE BRANCH

City of West Linn | DATE: 2010 | DRAWING NO. WL-218 | FILE NO.

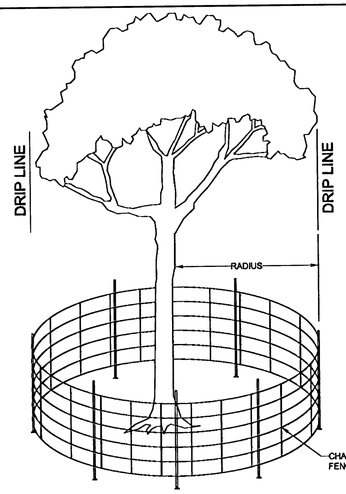

NOTE:
1. 6' CHAIN LINK ON 2" POST AT 10' SPACING, DRIVEN 2' INTO GROUND
2. RADIUS IS EITHER 1/2' PER CALIPER INCH OR 10' OUTSIDE OF DRIPLINE - SEE PLANS

THIS DETAIL DRAWING SHALL NOT BE ALTERED OR CHANGED IN ANY MANNER EXCEPT BY THE CITY ENGINEER. IT IS THE RESPONSIBILITY OF THE USER TO ACQUIRE THE MOST CURRENT VERSION OF THE DETAIL.

TREE PROTECTION FENCE

City of West Linn | DATE: 2010 | DRAWING NO. WL-219 | FILE NO.

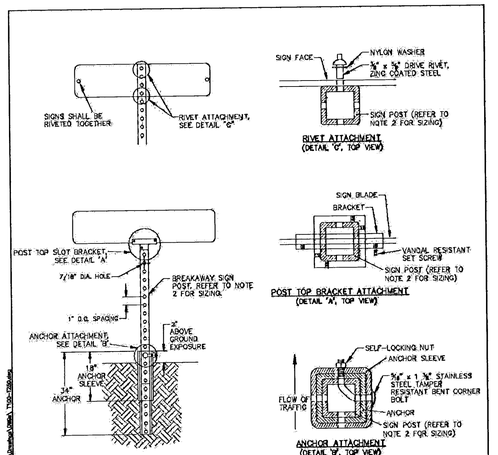

NOTES:
1. SIGN COMBINATION AND MINIMUM SIGN MOUNTING HEIGHT SHALL DETERMINE POST LENGTH. A 10' (MIN.) POST SHALL BE USED. A COMBINATION OF SIGNS GREATER THAN 36" IN HEIGHT SHALL REQUIRE A 12' (MIN.) POST.
2. SIGN POST SIZING SHALL BE BASED ON OREGON STANDARD DRAWING TM682 (85 MPH SQUARE TUBE SIGN SUPPORT SIZING CHART). THE MINIMUM POST SIZE SHALL BE 2" X 2" 12 GA. SQUARE TUBE. IF THE SIGN PANEL AREA IS GREATER THAN THAT ALLOWED BY A 2" X 2" POST, THEN A 2 1/2" X 2 1/2" 12 GA. POST SHALL BE USED. IF A LARGER SUPPORT IS REQUIRED, THEN WOOD SIGN SUPPORTS SHALL BE USED AS PER OREGON STANDARD DRAWING TM870.
3. NYLON SPACERS SHALL BE USED TO PREVENT CONTACT BETWEEN GALVANIZED STEEL AND ALUMINUM MATERIAL SURFACES.

REVISION	DATE	BY

DEPARTMENT OF TRANSPORTATION AND DEVELOPMENT, 150 BEAVERCREEK ROAD, OREGON CITY, OR 97045 | CLACKAMAS COUNTY | APPROVAL DATE: 1/1/10 | SCALE: N.T.S. | SIGN MOUNTING AND ATTACHMENTS | STANDARD DRAWING T150

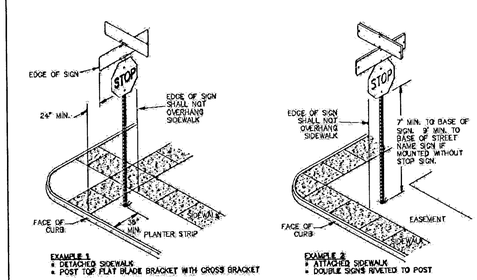

TYPICAL SIGN INSTALLATIONS

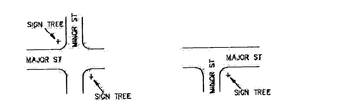

TYPICAL STREET NAME SIGN LOCATIONS

REVISION	DATE	BY

DEPARTMENT OF TRANSPORTATION AND DEVELOPMENT, 150 BEAVERCREEK ROAD, OREGON CITY, OR 97045 | CLACKAMAS COUNTY | APPROVAL DATE: 1/1/10 | SCALE: N.T.S. | SIGN INSTALLATIONS | STANDARD DRAWING T260

DESIGN GROUP
THE SAUNDERS COMPANY
901 N. Brutscher, Ste. 202
Newberg, Oregon 97132
Phone: 503-537-9347
www.thesaunderscompany.net

7/31/12
REGISTERED PROFESSIONAL ENGINEER
50644PE
OREGON
SEPT. 14, 1993
CHARLES EDWARD GREGORY
RENEWS: JUNE 30, 2013

J.T. SMITH companies

Teresa's Vineyard
Public Improvements
Sub-07-02/NDW-07-02/VAR-07-01
West Linn, Oregon

REV	DATE	SUMMARY
1	8/5/11	Client/Agency Comments
	7/2/12	Add'l As Built
	1/27/12	As Built

Project #: 9130 Drawn: CL

CITY OF WEST LINN STANDARD PLANS AND DETAILS GENERAL

Date: April 15, 2011

C6.2

\\SERVER\Local Projects\9130\ENGINEERING\Construction Documents\Drawings\Permit Submittal\9130-DETAILS.dwg, 7/24/2012 9:53:04 AM, The Saunders Company

THIS DETAIL DRAWING SHALL NOT BE ALTERED OR CHANGED IN ANY MANNER EXCEPT BY THE CITY ENGINEER. IT IS THE RESPONSIBILITY OF THE USER TO ACQUIRE THE MOST CURRENT VERSION OF THE DETAIL.

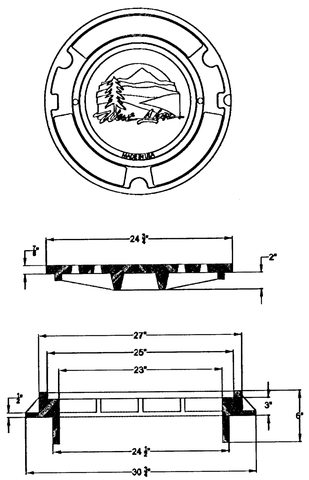

NOTE:

1. COVER AND FRAME TO BE MACHINED FOR TRUE BEARING
2. MATERIAL SHALL BE GRAY CAST IRON A.S.T.M. A-48 CLASS 30
3. 2 HOLE LID FOR SANITARY SEWER
4. 16 HOLE LID FOR STORM SEWER

SUBURBAN MANHOLE FRAME AND COVER 3' DEPTH

City of West Linn | DATE: 2010 | DRAWING NO. WL-300 | FILE NO.

THIS DETAIL DRAWING SHALL NOT BE ALTERED OR CHANGED IN ANY MANNER EXCEPT BY THE CITY ENGINEER. IT IS THE RESPONSIBILITY OF THE USER TO ACQUIRE THE MOST CURRENT VERSION OF THE DETAIL.

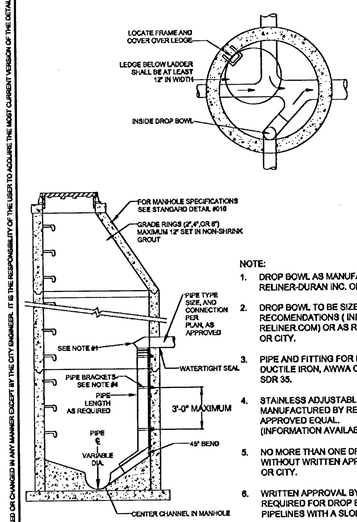

NOTE:

1. DROP BOWL AS MANUFACTURED BY RELINER-DURAN INC. OR APPROVED EQUAL.
2. DROP BOWL TO BE SIZED PER MANUFACTURER'S RECOMENDATIONS (INFORMATION AVAILABLE @ RELINER.COM) OR AS REQUIRED BY DISTRICT OR CITY.
3. PIPE AND FITTING FOR DROP ASSEMBLY SHALL BE: DUCTILE IRON, AWWA C-900 OR PVC ASTM 3034 SDR 35.
4. STAINLESS ADJUSTABLE PIPE BRACKETS AS MANUFACTURED BY RELINER-DURAN INC. OR APPROVED EQUAL. (INFORMATION AVAILABLE @ RELINER.COM).
5. NO MORE THAN ONE DROP BOWL PER MANHOLE WITHOUT WRITTEN APPROVAL BY DISTRICT OR CITY.
6. WRITTEN APPROVAL BY DISTRICT OR CITY IS REQUIRED FOR DROP BOWL INSTALATION ON PIPELINES WITH A SLOPE OF 5% OR GREATER.

INSIDE DROP MANHOLE CONNECTION FOR SANITARY SEWER PRIVATE SERVICE

City of West Linn | DATE: 2010 | DRAWING NO. WL-302 | FILE NO.

THIS DETAIL DRAWING SHALL NOT BE ALTERED OR CHANGED IN ANY MANNER EXCEPT BY THE CITY ENGINEER. IT IS THE RESPONSIBILITY OF THE USER TO ACQUIRE THE MOST CURRENT VERSION OF THE DETAIL.

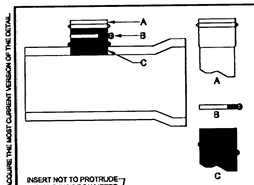

A. PVC HUB SHALL CONFORM TO ASTM 3034, SDR 35 DRIVE INTO CENTER OF RUBBER SLEEVE AFTER SLEEVE IS PLACED IN HOLE.

B. STAINLESS STEEL BAND SECURES UPPER HALF OF RUBBER SLEEVE TO THE PVC HUB. STAINLESS STEEL BAND SHALL BE 300 SERIES, 9/16" BAND WIDTH, CADMIUM PLATED CARBON STEEL, AND ATTACHED WITH HEX HEAD SLOTTED SCREW.

C. COMPLETE RUBBER SLEEVE INCLUDES A MOLDED SEGMENT THAT HOLDS IT IN PLACE.

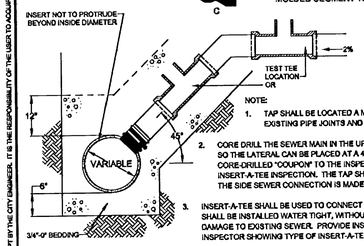

NOTE:

1. TAP SHALL BE LOCATED A MINIMUM OF 12" FROM EXISTING PIPE JOINTS AND 12" FROM OTHER TAPS.
2. CORE DRILL THE SEWER MAIN IN THE UPPER QUARANT OF THE PIPE SO THE LATERAL CAN BE PLACED AT A 45° ANGLE AND PRESENT THE CORE-DRILLED "COUPON" TO THE INSPECTOR AT TIME OF THE INSERT-A-TEE INSPECTION. THE TAP SHALL BE INSPECTED BEFORE THE SIDE SEWER CONNECTION IS MADE.
3. INSERT-A-TEE SHALL BE USED TO CONNECT LATERAL TO MAIN. TAP SHALL BE INSTALLED WATER TIGHT, WITHOUT PROTRUSION INTO OR DAMAGE TO EXISTING SEWER. PROVIDE INSERT-A-TEE PACKAGING TO INSPECTOR SHOWING TYPE OF INSERT-A-TEE INSTALLED.
4. LATERAL SHALL BE 4" (FOR STANDARD SINGLE FAMILY HOMES) GREEN ASTM3034 AND PLACE AT 2% SLOPE TO THE PROPERTY LINE. PLACE A TEST TEE WITHIN 3 FEET OF THE TAP.
5. PLACE GREEN TRACER WIRE OVER CENTERLINE OF SERVICE LATERAL.
6. COMPACT 6" OF 3/4-0" ROCK UNDER THE PIPE. HAUNCH WELL UNDER LATERAL.
7. ONCE APPROVED BY CITY INSPECTOR, PLACE 12" OF 3/4"-ROCK ABOVE THE TOP OF THE PIPE.
8. BACKFILL ABOVE THE PIPE ZONE (ABOVE 12" OF ROCK) SHALL BE COF (DELIVER COF RECEIPT TO THE ENGINEERING DEPT). ALTERNATELY, 3/4-0" GRAVEL BACKFILL MAY BE USED. COMPACTION TESTING BY A CERTIFIED TESTING AGENCY MUST OCCUR IN LIFTS AS SPECIFIED BY THE CITY INSPECTOR (DELIVER TEST RESULTS TO THE ENGINEERING DEPT). CITY RESERVES THE RIGHT TO FURTHER SPECIFY BACKFILL BASED ON SITE CONDITIONS.
9. T.V. INSPECTION OF THE LATERAL AND/OR MAIN MAY BE REQUIRED FOLLOWING BACKFILL, PRIOR TO FINAL APPROVAL.
10. 4" MAXIMUM TAP FOR 8" MAIN (CUT IN TEE TO BE USED FOR 8" LATERAL ON 8" MAIN).
11. ALL CONNECTIONS SHALL BE MADE WITH HARD FITTINGS, INCLUDING TRANSITIONS BETWEEN DISSIMILAR MATERIALS.

SEWER SERVICE TAP TO EXISTING SEWER FOR HOUSE LATERALS

City of West Linn | DATE: 2010 | DRAWING NO. WL-303 | FILE NO.

RECORD DRAWINGS
Prepared By: Chuck Gregory, P.E. Date: 7/31/12

THESE RECORD DRAWINGS HAVE BEEN PREPARED, IN PART, ON THE BASIS OF AS-BUILT INFORMATION COMPILED BY THE CONTRACTOR AND PERIODIC OBSERVATIONS DURING CONSTRUCTION. THE INFORMATION CONTAINED IN THESE DRAWINGS ARE TO THE BEST OF MY KNOWLEDGE AN ACCURATE RECORD OF THE CONSTRUCTED PUBLIC IMPROVEMENTS. IT IS RECOMMENDED THAT USERS OF THESE DRAWINGS FIELD VERIFY UTILITY SIZES, LOCATIONS AND ELEVATIONS.

THE SAUNDERS COMPANY
DESIGN GROUP
901 N. Brutscher, Ste. 202
Newberg, Oregon 97132
Phone: 503-537-9347
www.thesaunderscompany.net

7/31/12
REGISTERED PROFESSIONAL ENGINEER
50644PE
OREGON
SEPT. 14, 1999
CHARLES EDWARD GREGORY
RENEWS: JUNE 30, 2013

J.T. SMITH companies

Teresa's Vineyard
Public Improvements
Sub-07-02/NDW-07-02/VAR-07-01
West Linn, Oregon

REV	DATE	SUMMARY
1	8/5/11	Client/Agency Comments
	7/2/12	Add'l As Built
	1/27/12	As Built

Project #: 9130 Drawn: CL

CITY OF WEST LINN STANDARD PLANS AND DETAILS SANITARY SEWER

Date: April 15, 2011

C6.3

\\SERVER\Last Projects\9130\DAGNEERING\Construction Documents\Drawings\Permit Submittal\9130-DETAILS.dwg, 7/24/2012 9:53:19 AM, The Saunders Company

THIS DETAIL DRAWING SHALL NOT BE ALTERED OR CHANGED IN ANY MANNER EXCEPT BY THE CITY ENGINEER. IT IS THE RESPONSIBILITY OF THE USER TO ACQUIRE THE MOST CURRENT VERSION OF THE DETAIL.

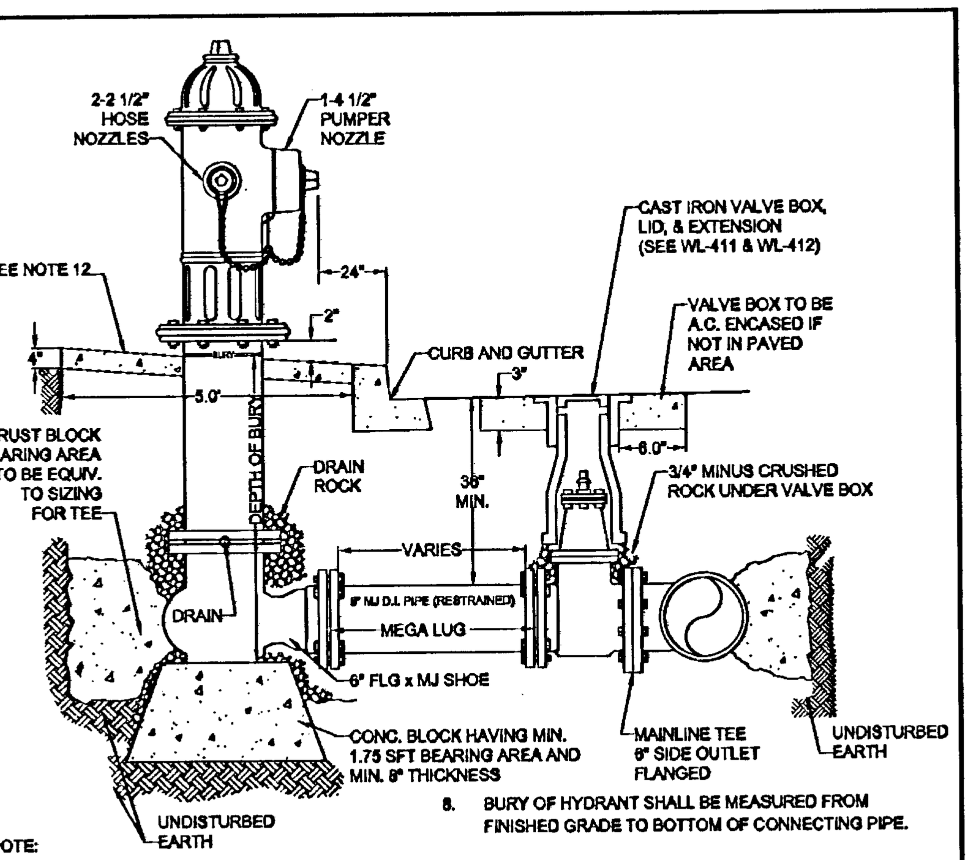

NOTE:

1. HYDRANT TO BE MUELLER CENTURION MDL A-423 ONLY WITH 1 1/2" OPER. NUTS OR CLOW MEDALLION F-2545.
2. HYDRANT COLOR TO BE MILLER EQUIP. ENAMEL 0 E 40 (SAFETY YELLOW).
3. JOINTS TO BE RESTRAINED BY 3/4" DIA. GALVANIZED STEEL RODS AND THRUST BLOCKS OR MEGALUGS AND THRUST BLOCKS.
4. ALL FITTINGS IN CONTACT W/CONCRETE SHALL BE WRAPPED IN PLASTIC, HYDRANT DRAIN HOLES TO REMAIN OPEN TO DRAIN ROCK AND OPERATIONAL.
5. MIN. 4 CFT OF 1 1/2" - 3/4" CLEAN DRAIN ROCK SHALL BE PLACED AROUND SHOE UP TO A MIN. OF 6" ABOVE DRAIN OUTLETS.
6. WHERE PLANTER STRIP EXISTS, HYDRANT SHALL BE PLACED SO THE FRONT PORT IS A MINIMUM OF 24" BEHIND THE FACE OF THE CURB.
7. WHERE INTEGRAL S/W & CURB EXISTS, HYDRANT SHALL BE PLACED AT BACK OF THE SIDEWALK, OR AS DIRECTED BY ENGINEER.
8. BURY OF HYDRANT SHALL BE MEASURED FROM FINISHED GRADE TO BOTTOM OF CONNECTING PIPE.
9. THRUST BLOCK AT FIRE HYDRANT TEE SHALL BE EQUIVALENT TO TEE PIPE SIZING (SEE WL-406).
10. HYDRANT VALVE SHALL BE MUELLER RESILIENT WEDGE GATE VALVE #A-2360-16 ONLY.
11. NO EXTENSIONS ALLOWED
12. HYDRANT SHALL HAVE A 5' x5' x 4" THICK CONCRETE APRON. THERE SHALL BE 2" OF CLEARANCE BETWEEN THE TOP OF THE APRON AND THE BOTTOM OF THE FLANGED BOLT PATTERN OF THE HYDRANT.
13. CONCRETE SHALL BE COMMERCIALLY MIXED WITH A BREAKING STRENGTH OF NOT LESS THAN 3000 PSI.

STANDARD FIRE HYDRANT ASSEMBLY

CITY OF West Linn | DATE: 2010 | DRAWING NO. WL-401 | FILE NO.

THIS DETAIL DRAWING SHALL NOT BE ALTERED OR CHANGED IN ANY MANNER EXCEPT BY THE CITY ENGINEER. IT IS THE RESPONSIBILITY OF THE USER TO ACQUIRE THE MOST CURRENT VERSION OF THE DETAIL.

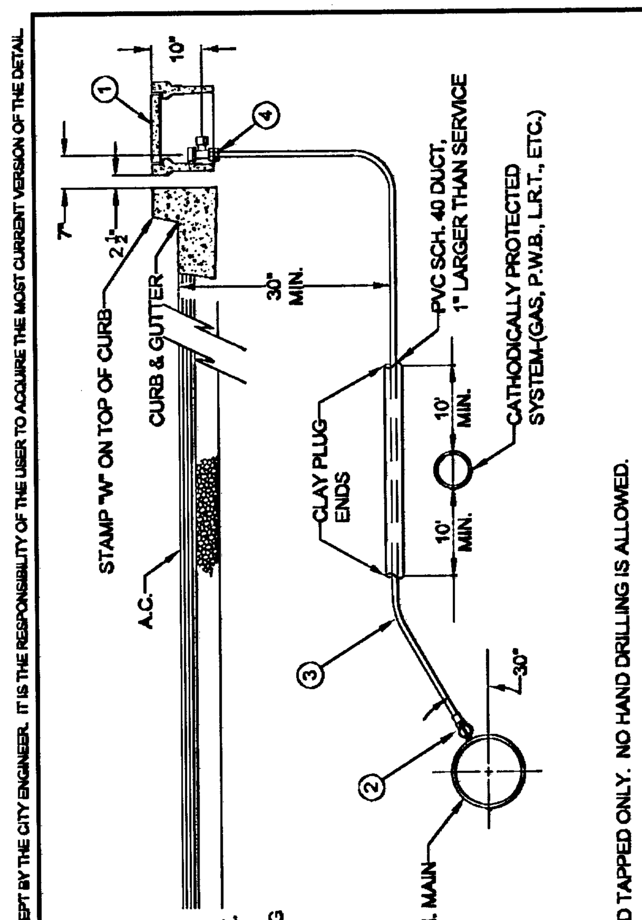

MATERIAL:

1. BROOKS METER BOX, BODY NO. 37, LID AND COVER NO.37-S.
2. MUELLER CORP. STOP NO. H-15008 OR FORD F1000-4Q CORP. STOP WITH OPERATING NUT AT 3 OR 9 O'CLOCK.
3. 1" SOFT TEMPER, TYPE "K" COPPER TUBING COMPLYING WITH ASTM B-88.
4. MUELLER ANGLE METER STOP NO. H-14258 (FORD NO. KV43-444W-Q).

NOTE:

1. MACHINE DRILLED AND TAPPED ONLY. NO HAND DRILLING IS ALLOWED.
2. SUBSTITUTES FOR ANY MATERIALS SHOWN SHALL BE APPROVED BY THE CITY ENGINEER.
3. ALL PIPE AND STRUCTURE ZONE SHALL BE BACKFILLED USING 3/4" MINUS CRUSHED AGG. AND COMPACTED TO 95% MAX DENSITY AS DETERMINED BY AASHTO T-180.
4. WHEN AN ACTIVE CATHODIC PROTECTED SYSTEM IS ENCOUNTERED, SCH. 40 PVC SHALL BE INSTALLED AS SHOWN ABOVE WITH CLAY PLUG.
5. METER BOX SHALL BE CENTERED OVER THE COMPLETED METER ASSEMBLY.
6. TAPS INTO MAIN TO HAVE 18" SEPARATION ON CENTER MINIMUM.
7. ANGLE METER STOPS TO BE 18" FROM PROPERTY LINE AND NOT IN DRIVEWAY APPROACH.
8. METER BOXES IN CURB TIGHT SIDEWALK AND THOSE SUBJECT TO INCIDENTAL AUTO TRAFFIC MUST HAVE METAL LIDS AND BE TRAFFIC RATED.

STANDARD 1" WATER SERVICE

CITY OF West Linn | DATE: 2010 | DRAWING NO. WL-402 | FILE NO.

THIS DETAIL DRAWING SHALL NOT BE ALTERED OR CHANGED IN ANY MANNER EXCEPT BY THE CITY ENGINEER. IT IS THE RESPONSIBILITY OF THE USER TO ACQUIRE THE MOST CURRENT VERSION OF THE DETAIL.

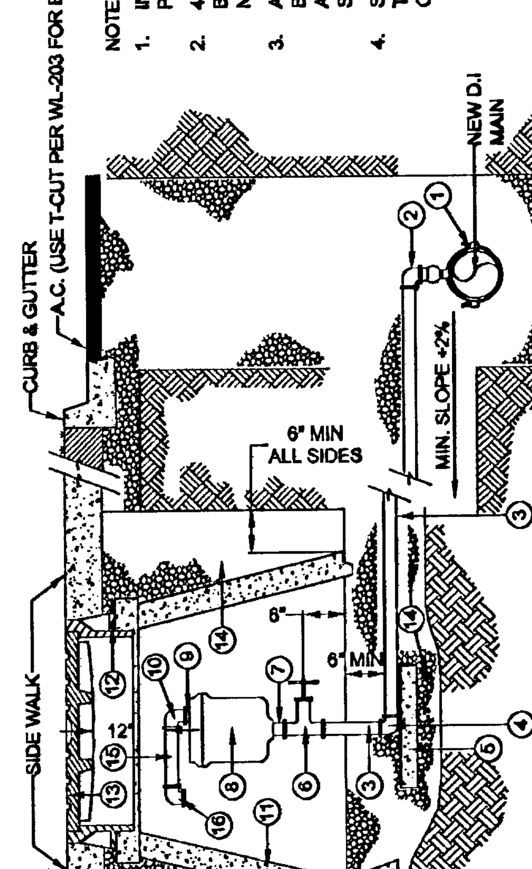

MATERIAL:

1. ROCKWELL NO. 317 SERVICE SADDLE WITH STAINLESS STRAPS
2. MUELLER NO. H15045 2" CORPORATION STOP WITH 1/4 BEND ADAPT (I.P.T. MUELLER 110 CTS)
3. 2" X VARIABLE LENGTH BRASS I.P.T. NIPPLE
4. 2" BRASS 90 DEGREE ELL (MUELLER 110 CTS)
5. 12" X 12" X 4" CONCRETE BLOCK
6. NIBCO NO. 113 2" BRASS GATE VALVE
7. 2" X 3" BRASS I.P.T. NIPPLE
8. 2" AIR RELEASE VALVE (VAL-MATIC #38 OR APCO #205 FOR TYPICAL INSTALLATIONS. IN SOME INSTANCES THE CITY MAY REQUIRE COMBINATION AIR RELEASE & VACUUM UNIT.) INSTALL WALL BRACKETS TO SUPPORT VALVE AS NECESSARY
9. 1/2" X 1 1/2" OR 2" X 1 1/2" BRASS I.P.T. NIPPLE
10. 1/2" OR 2" BRASS 90 DEGREE ELL (F.M. I.P.T. X F.M. I.P.T.)
11. STD. 48" CONCRETE MANHOLE CONE
12. FRAME PER STD. DWG. WL-214.
13. TAMPERPROOF MANHOLE COVER PER STD. DWG. WL-214.
14. 3/4" MINUS CRUSHED AGG.
15. 1/2" X 6" OR 2" X 6" BRASS NIPPLE, I.P.T.
16. 1/2" OR 2" BRASS 90 DEGREE ELL WITH SCREEN ON OUTLET
17. 3 EA. 12" CONCRETE PIER BLOCKS

NOTE:

1. INSTALLATION LOCATED AT HIGH POINT OF MAIN
2. 48" MANHOLE BARREL SECTIONS SHALL BE USED TO INCREASE DEPTH IF NECESSARY
3. ALL PIPE AND STRUCTURE ZONES SHALL BE COMPACTED TO 95% OF MAX. DENSITY AS DETERMINED BY AASHTO T-180 OR AS SPECIFIED IN THE CONTRACT DOCUMENTS
4. STD. DETAIL IS NOT FOR SHALLOWER THAN TYPICAL INSTALLATIONS. CONTACT CITY WATER DEPT. FOR OPTIONS

STANDARD AIR RELEASE VALVE UNIT

CITY OF West Linn | DATE: 2010 | DRAWING NO. WL-405 | FILE NO.

THIS DETAIL DRAWING SHALL NOT BE ALTERED OR CHANGED IN ANY MANNER EXCEPT BY THE CITY ENGINEER. IT IS THE RESPONSIBILITY OF THE USER TO ACQUIRE THE MOST CURRENT VERSION OF THE DETAIL.

FITTING SIZE (Inches)	TEE, WYE, & ① HYDRANTS	STRADDLE BLOCK ②	90° BEND ③ PLUGGED CROSS TEE PLUGGED-RUNS	45° BEND ④	22 1/2° BEND ④	11 1/2° BEND ④
2	*	*	*	*	*	*
4	1.7	2.1	2.4	1.3	*	*
6	3.7	4.9	5.3	2.9	1.5	*
8	6.7	8.7	9.5	5.1	2.7	1.3
10	10.5	13.6	14.8	8	4.1	2
12	15.1	19.6	21.3	11.6	5.9	2.9
14						
16	26.8	34.8	37.9	20.5	10.4	5.2
18	33.9	44	47.9	25.9	12.8	6.7
LARGER	**	**	**	**	**	**

BEARING AREA OF THRUST BLOCKS (sq. ft.)

1. ALL VALUES ARE BASED ON THE FOLLOWING ASSUMPTIONS: AVG. PRESSURE = 100 PSI X 2 (safety factor); 1500 PSF SOIL BEARING CAPACITY; NORMAL DISTRIBUTION DESIGN VELOCITY NOT TO EXCEED 5 F/S.
2. ALL FITTINGS SHALL BE WRAPPED IN 8 MM PLASTIC PRIOR TO PLACEMENT OF CONCRETE.
3. BEARING SURFACE OF THRUST BLOCKING SHALL BE AGAINST UNDISTURBED SOIL
4. ALL CONCRETE MIX SHALL HAVE A MIN. 28 DAY STRENGTH OF 3000 PSI.
5. ALL PIPE ZONES SHALL BE GRAVEL FILLED AND COMPACTED.
6. THRUST BLOCKS FOR PLUGGED CROSS AND PLUGGED TEE SHALL HAVE #4 REBAR LIFTING LOOPS INSTALLED AS SHOWN.
7. VERTICAL THRUST DETAILS-SEE DWG. WL-407.
8. STRADDLE BLOCK DETAILS-SEE DWG. WL-408.

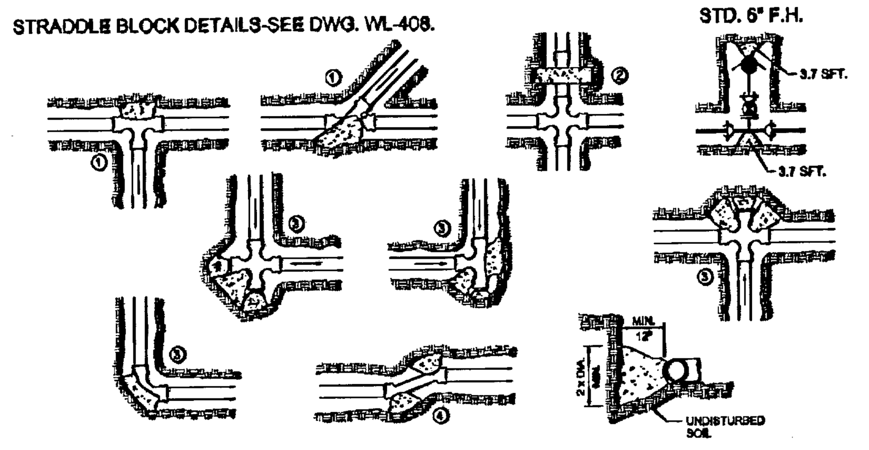

* BLOCK TO UNDISTURBED TRENCH WALLS.

** THRUST BLOCKS FOR PIPES LARGER THAN 18" WILL BE INDIVIDUALLY DESIGNED BY THE ENGINEER.

HORIZONTAL THRUST BLOCKING

CITY OF West Linn | DATE: 2010 | DRAWING NO. WL-406 | FILE NO.

THIS DETAIL DRAWING SHALL NOT BE ALTERED OR CHANGED IN ANY MANNER EXCEPT BY THE CITY ENGINEER. IT IS THE RESPONSIBILITY OF THE USER TO ACQUIRE THE MOST CURRENT VERSION OF THE DETAIL.

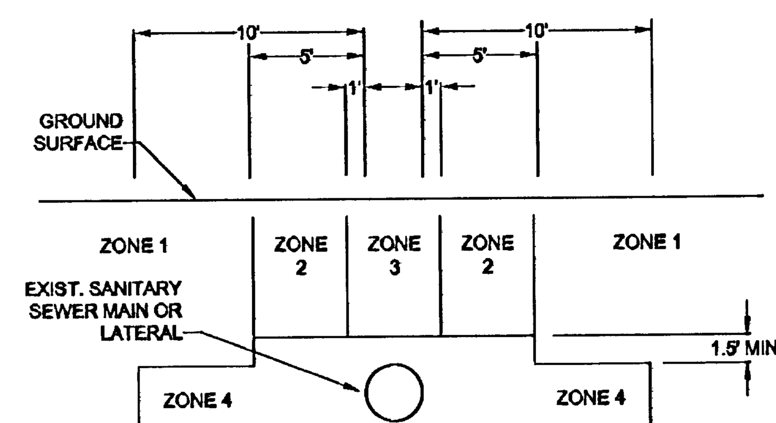

ZONE 1: ONLY CROSSING RESTRICTIONS APPLY
ZONE 2: CASE-BY-CASE DETERMINATION
ZONE 3: PARALLEL WATERLINE PROHIBITED
ZONE 4: PARALLEL WATERLINE PROHIBITED

NOTE:

1. WHERE THE PROPOSED WATERLINE WILL BE INSTALLED PARALLEL TO AN EXISTING GRAVITY SANITARY SEWER MAIN OR LATERAL LINE, THE SEPARATION BETWEEN THE TWO SHALL BE AS INDICATED ABOVE.
2. CROSSINGS:

   A. WHEREVER POSSIBLE, THE BOTTOM OF THE WATERLINE SHALL BE 1.5 FEET ABOVE THE TOP OF THE SEWER LINE, AND ONE FULL LENGTH OF WATERLINE SHALL BE CENTERED AT THE CROSSING.

   B. WHERE IT IS NOT POSSIBLE FOR THE WATER LINE TO BE 1.5 FEET ABOVE THE SEWER LINE, OR THE WATERLINE PASSES UNDER THE SEWER LINE, THE EXISTING SEWER LINE SHALL BE EXPOSED FOR A DISTANCE OF 10 FEET ON EACH SIDE OF THE CROSSING, AND SHALL BE REPLACED WITH C-900 PVC WITH STRUCTURAL REQUIREMENT OF DR18 OR DR 25 OR CLASS 50 DUCTILE IRON PIPE AS APPROVED BY THE CITY ENGINEER, AND A LENGTH OF WATER PIPE SHALL BE CENTERED AT THE CROSSING, OR AS APPROVED BY THE CITY ENGINEER.

STANDARD SANITARY SEWER CROSSING

CITY OF West Linn | DATE: 2010 | DRAWING NO. WL-409 | FILE NO.

THIS DETAIL DRAWING SHALL NOT BE ALTERED OR CHANGED IN ANY MANNER EXCEPT BY THE CITY ENGINEER. IT IS THE RESPONSIBILITY OF THE USER TO ACQUIRE THE MOST CURRENT VERSION OF THE DETAIL.

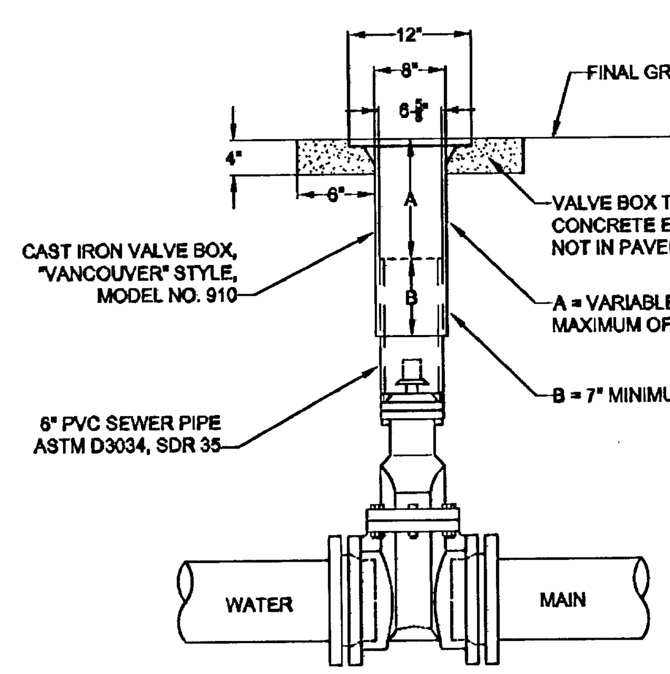

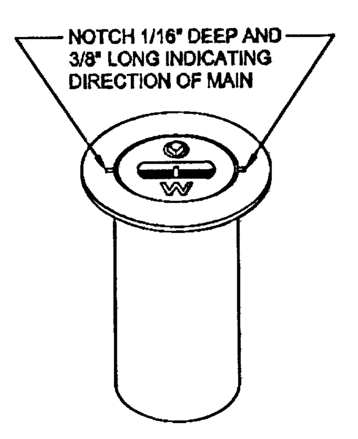

"VANCOUVER" 18" TALL VALVE BOX

NOTE:

1. VALVE BOXES SHALL BE CENTERED DIRECTLY OVER THE VALVE NUT IN A VERTICAL POSITION.
2. VALVE BOX TOP SHALL BE ADJUSTED TO MEET FINISHED GRADE.
3. PVC SHALL BE ONE CONTINUOUS PIECE-NO BELLS OR COUPLERS.
4. ON VALVES 8" AND LARGER, PVC SHALL BE NOTCHED OVER VALVE PACKING BOLTS SO PVC SITS ON BONNET.

STANDARD VALVE BOX DETAIL

CITY OF West Linn | DATE: 2010 | DRAWING NO. WL-411 | FILE NO.

THIS DETAIL DRAWING SHALL NOT BE ALTERED OR CHANGED IN ANY MANNER EXCEPT BY THE CITY ENGINEER. IT IS THE RESPONSIBILITY OF THE USER TO ACQUIRE THE MOST CURRENT VERSION OF THE DETAIL.

CITY OF WEST LINN
REQUIREMENTS FOR BACKFLOW PREVENTION DEVICE ASSEMBLY INSTALLATIONS ON 1 1/2" AND LARGER DOMESTIC SERVICES, IRRIGATION SERVICES AND FIRELINE SERVICES

An approved backflow prevention device assembly is required on all 1 1/2" and larger domestic meter size services, all irrigation and most fireline systems. A device assembly will be approved by the City of West Linn only if the State of Oregon Health Division has approved its use as a backflow device assembly. The device shall be installed at the property line. When it is not possible to locate the device at the property line, the proposed location must be approved by the Water Division Engineer. A water service shall not be turned on until all required backflow prevention devices are installed, inspected, tested and registered with the City of West Linn. Costs of all installations, including all costs of initial inspection and testing fees, shall be the responsibility of the customer. The customer will be responsible for all maintenance and testing of the device and vault when used.

CONSTRUCTION AND DESIGN STANDARDS FOR WATER FACILITIES

1. All pipe shall be installed to the City of West Linn's Public Works Standards.
2. The City of West Linn will be furnished with three sets of plans and specifications. The plans shall be drawn at a scale of 1"=20' for plan check. One set of revised plans shall be returned to the engineer for revisions.
3. The contractor shall keep one set of approved plans at the construction site
4. The engineer shall furnish the City of West Linn 48-hours notice prior to construction.
5. Water facilities shall be installed in the presence of the City of West Linn's inspector. The inspector shall have access to the construction site at all times.
6. New mains shall be pressure tested and disinfected by the contractor and proven to be bacteriologically safe prior to placing new mains in service and prior to connection to City facilities.
7. Upon completion of the water facility, the engineer shall notify the City of West Linn 48 hours in advance of desired, final inspection.

BACKFLOW PREVENTION DEVICES

CITY OF West Linn | DATE: 2010 | DRAWING NO. WL-414B | FILE NO.

THIS DETAIL DRAWING SHALL NOT BE ALTERED OR CHANGED IN ANY MANNER EXCEPT BY THE CITY ENGINEER. IT IS THE RESPONSIBILITY OF THE USER TO ACQUIRE THE MOST CURRENT VERSION OF THE DETAIL.

To ensure proper operation and accessibility of all backflow prevention device assemblies, the following requirements shall apply to installation of these devices, unless specifically approved by the Water Division Engineer.

1. No part of the backflow prevention device shall be submerged in water or installed in a location subject to flooding. If installed in a vault or chamber, adequate drainage shall be provided by either drainage to daylight or by sump pump with high water alarm system. Test cocks shall be plugged. The plugs shall not be of dissimilar metals.
2. The device assembly must be protected from freezing and other severe weather conditions.
3. Only devices approved for vertical installation may be installed vertically.
4. The device assembly shall be readily accessibly with adequate room for maintenance and testing. Devices 2 inches and smaller shall have at least a 12-inch clearance below and on both sides of the device assembly; and if located in a vault, the top of the device assembly shall be between 12 and 24 inches below grade.
5. All device assemblies larger than 2 inches shall have a 12-inch clearance on the backside, a 24-inch clearance on the test-cock side, and 12 inches below the device assemblies. Adequate clearance (3 inches minimum) must be maintained above O.S. & Y. gate-valve stem. Headroom of 6' 0" is required in vaults. Access to the device and to any vault or chamber shall remain clear at all times. An OR/OSHA approved chamber ladder that extends 3 ft. above surface of vault shall be installed.
6. No indicating valves are allowed on Double Check Device assemblies.
7. Only approved Double Check Detector Check Valve Assemblies are to be used for system containment on fire line services in the City of West Linn. The meter on bypass assembly shall read in cubic feet.
8. If a Fire Line Flow, or Tamper Switch is installed, it must be connected to a monitored Fire Detection System approved by the Fire Marshal. No installation will modify the backflow device assembly or interfere with its operation or maintenance.
9. All backflow devices shall be installed at the service connection to the premises per Oregon Administrative Rules 333-061-070, Cross Connection Control Requirements, unless specifically approved by the Water Division Engineer. (service connection - a location where the public water facilities end at or near the property line)
10. All pipe between main and device shall be restrained. Use Mega-Lug retainer glands on mj fittings and Field-Lok gaskets on bell joints. Uni-Flange adapters may be used in vaults.

RECORD DRAWINGS

Prepared By: ______ Date: ______
Chuck Gregory, P.E.

THESE RECORD DRAWINGS HAVE BEEN PREPARED, IN PART, ON THE BASIS OF AS-BUILT INFORMATION COMPILED BY THE CONTRACTOR AND PERIODIC OBSERVATIONS DURING CONSTRUCTION. THE INFORMATION CONTAINED IN THESE DRAWINGS ARE TO THE BEST OF MY KNOWLEDGE AN ACCURATE RECORD OF THE CONSTRUCTED PUBLIC IMPROVEMENTS. IT IS RECOMMENDED THAT USERS OF THESE DRAWINGS FIELD VERIFY UTILITY SIZES, LOCATIONS AND ELEVATIONS.

BACKFLOW PREVENTION DEVICES

CITY OF West Linn | DATE: 2010 | DRAWING NO. WL-414C | FILE NO.

DESIGN GROUP
901 N. Brutscher, Ste. 202
Newberg, Oregon 97132
Phone: 503-537-9347
www.thesaunderscompany.net
THE SAUNDERS COMPANY

7/31/12

REGISTERED PROFESSIONAL ENGINEER 50644PE OREGON SEPT. 14, 1999 CHARLES EDWARD GREGORY

RENEWS: JUNE 30, 2013

J.T. SMITH companies

Teresa's Vineyard
Public Improvements
Sub-07-02/NDW-07-02/VAR-07-01
West Linn, Oregon

REV	DATE	SUMMARY
1	8/5/11	Client/Agency Comments
	7/2/12	Add'l As Built
	1/27/12	As Built

Project #: 9130 Drawn: CL

CITY OF WEST LINN STANDARD PLANS AND DETAILS WATER

Date: April 15, 2011

C6.4

\\SERVER\Land Projects\9130\ENGINEERING\Construction Documents\Drawings\Permit Submittal\9130-DETAILS.dwg, 7/24/2012 9:53:29 AM, The Saunders Company

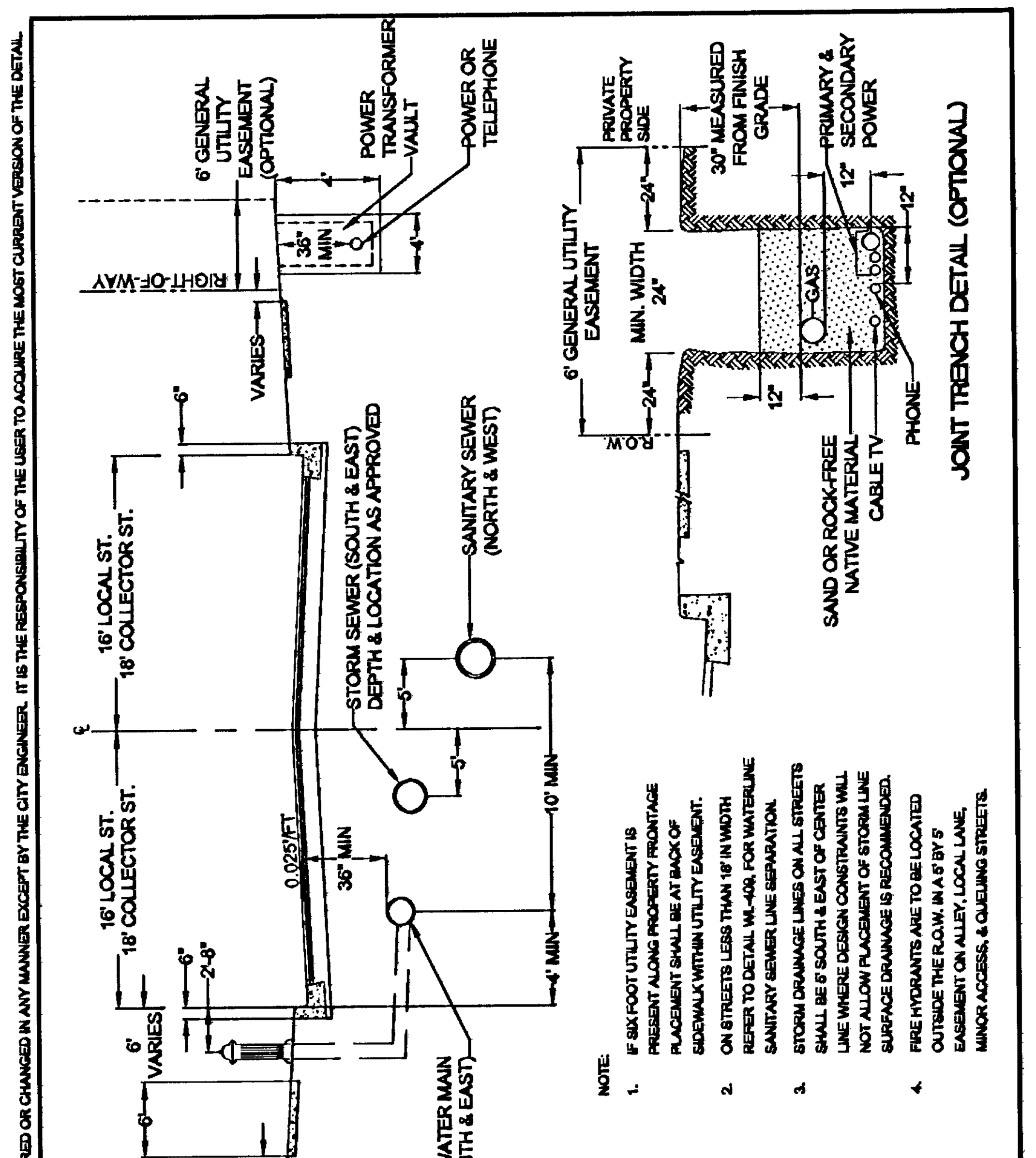

NOTE:
1. IF SIX FOOT UTILITY EASEMENT IS PRESENT ALONG PROPERTY FRONTAGE PLACEMENT SHALL BE AT BACK OF SIDEWALK WITHIN UTILITY EASEMENT.
2. ON STREETS LESS THAN 18' IN WIDTH REFER TO DETAIL WL-400, FOR WATERLINE SANITARY SEWER LINE SEPARATION.
3. STORM DRAINAGE LINES ON ALL STREETS SHALL BE 5' SOUTH & EAST OF CENTER LINE WHERE DESIGN CONSTRAINTS WILL NOT ALLOW PLACEMENT OF STORM LINE SURFACE DRAINAGE IS RECOMMENDED.
4. FIRE HYDRANTS ARE TO BE LOCATED OUTSIDE THE R.O.W. IN A 5' BY 5' EASEMENT ON ALLEY, LOCAL LANE, MINOR ACCESS, & QUEUING STREETS.

TYPICAL UTILITY PLACEMENT DETAIL

City of West Linn | DATE: 2010 | DRAWING NO. WL-500 | FILE NO.

THIS DETAIL DRAWING SHALL NOT BE ALTERED OR CHANGED IN ANY MANNER EXCEPT BY THE CITY ENGINEER. IT IS THE RESPONSIBILITY OF THE USER TO ACQUIRE THE MOST CURRENT VERSION OF THE DETAIL.

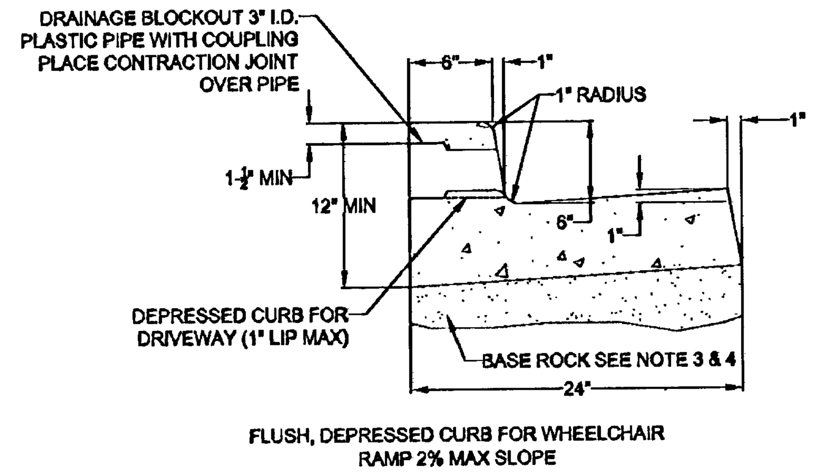

FLUSH, DEPRESSED CURB FOR WHEELCHAIR RAMP 2% MAX SLOPE

TYPICAL CURB AND GUTTER

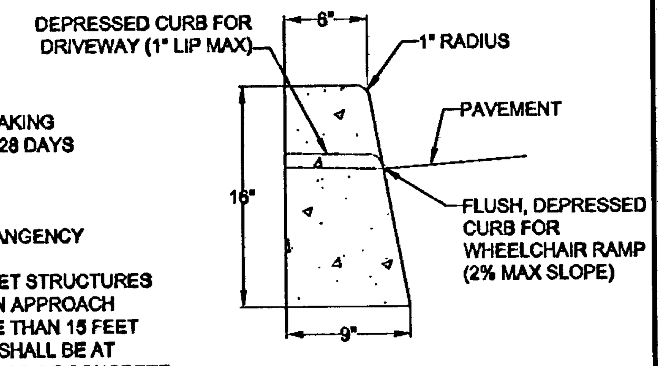

TYPICAL STRAIGHT CURB

NOTE:
1. CONCRETE SHALL HAVE A BREAKING STRENGTH OF 3300 PSI AFTER 28 DAYS
2. CONTRACTION JOINTS:
   A) TO BE PROVIDED:
      -AT EACH POINT OF TANGENCY
      -AT EACH COLD JOINT
      -AT EACH SIDE OF INLET STRUCTURES
      -AT BOTH SIDES OF AN APPROACH
   B) SPACING TO BE NOT MORE THAN 15 FEET
   C) THE DEPTH OF THE JOINT SHALL BE AT LEAST 1/3 OF THE THICKNESS OF CONCRETE
   D) EXPANSION JOINTS SHALL NOT BE USED
3. BASE ROCK - 1-1/2"-0", 95% COMPACTION PER AASHTO T-180 ROCK SHALL BE TO SUBGRADE OF THE STREET SECTION OR 4" IN DEPTH, WHICHEVER IS GREATER
4. FULL DEPTH PREPARED ROCK SECTION SHALL EXTEND 1' HORIZONTALLY BEYOND BOTH SIDES OF CURB AND GUTTER
5. DRAINAGE BLOCK - 3" DIA. PLASTIC PIPE
   A) DRAINAGE ACCESS THROUGH EXISTING CURBS SHALL BE DONE BY:
      -CORE DRILLING
      -VERTICAL SAWCUT OF CURB 24" EACH SIDE OF DRAIN AND RE-POURED TO FULL DEPTH OF CURB
6. STAMP TOP OF CURB WITH "W" AT WATER SERVICE CROSSING AND "S" AT SANITARY LATERAL CROSSING

TYPICAL CURBS

City of West Linn | DATE: 2010 | DRAWING NO. WL-501 | FILE NO.

THIS DETAIL DRAWING SHALL NOT BE ALTERED OR CHANGED IN ANY MANNER EXCEPT BY THE CITY ENGINEER. IT IS THE RESPONSIBILITY OF THE USER TO ACQUIRE THE MOST CURRENT VERSION OF THE DETAIL.

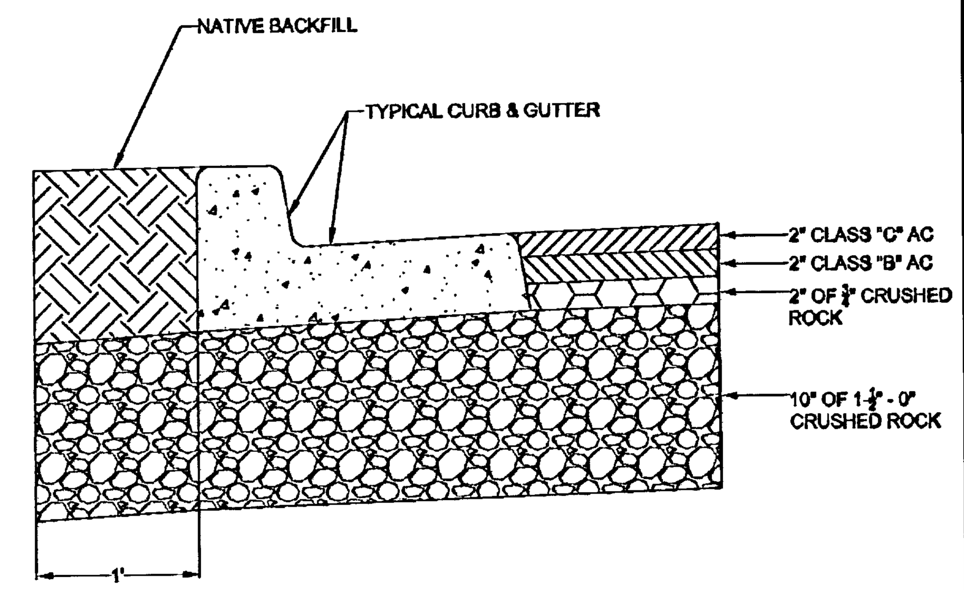

NOTE:
1. UNLESS OTHERWISE APPROVED BY THE CITY ENGINEER, STREETS SHALL BE PAVED TO FINAL GRADE USING 2 OR MORE LIFTS. FINAL LIFT SHALL BE PLACED ONLY AFTER ACCEPTANCE OF THE FIRST LIFT AT A TIME AS DIRECTED OR APPROVED BY THE CITY ENGINEER
2. BASE SHALL BE PREPARED I FOOT BEHIND CURB
3. SEE SECTION 5.0030 PAVEMENT DESIGN FOR ALL ROADWAYS CLASSIFIED COLLECTOR OR HIGHER

RECORD DRAWINGS

Prepared By: Chuck Gregory, P.E. Date:

THESE RECORD DRAWINGS HAVE BEEN PREPARED, IN PART, ON THE BASIS OF AS-BUILT INFORMATION COMPILED BY THE CONTRACTOR AND PERIODIC OBSERVATIONS DURING CONSTRUCTION. THE INFORMATION CONTAINED IN THESE DRAWINGS ARE TO THE BEST OF MY KNOWLEDGE AN ACCURATE RECORD OF THE CONSTRUCTED PUBLIC IMPROVEMENTS. IT IS RECOMMENDED THAT USERS OF THESE DRAWINGS FIELD VERIFY UTILITY SIZES, LOCATIONS AND ELEVATIONS.

ALLEY, LOCAL AND NEIGHBORHOOD ROAD STRUCTURAL SECTIONS

City of West Linn | DATE: 2010 | DRAWING NO. WL-502 | FILE NO.

THIS DETAIL DRAWING SHALL NOT BE ALTERED OR CHANGED IN ANY MANNER EXCEPT BY THE CITY ENGINEER. IT IS THE RESPONSIBILITY OF THE USER TO ACQUIRE THE MOST CURRENT VERSION OF THE DETAIL.

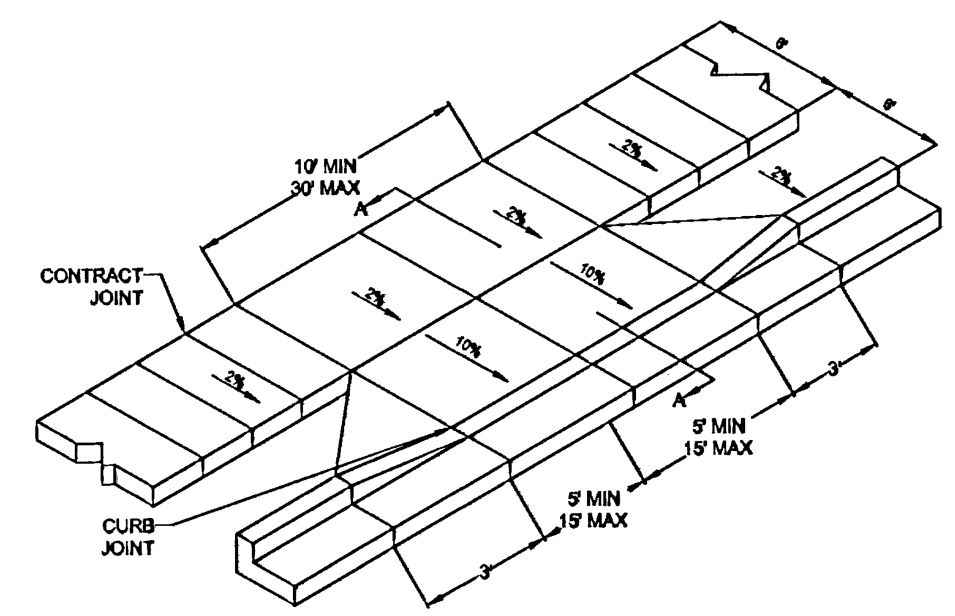

SIDEWALK AWAY FROM CURB

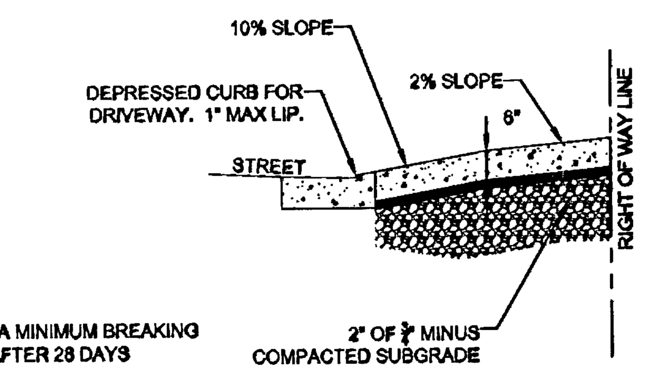

SECTION A-A

NOTE:
1. CONCRETE SHALL HAVE A MINIMUM BREAKING STRENGTH OF 3300 PSI AFTER 28 DAYS 6 SACK MIX
2. CURB SHALL BE TROWELED JOINT WITH MIN. 1/2" RADIUS ALONG BACK OF CURB
3. DRIVEWAY SHALL BE A MINIMUM 6" THICK
4. DRIVEWAY CURB CUT SHALL COMPLY WITH THE CONDITIONS OF 5.0070, "WIDTH AND LOCATION OF CURB CUTS"
5. FOR REPLACEMENT OF EXISITNG APPROACH:
   A. MUST MEET CURRENT ADA REQUIREMENTS TO GREATEST DEGREE POSSIBLE.
   B. DAMAGED ROADWAY MUST BE SAWCUT AND REPAVED WITH CLASS C HOT MIX ASPHALT

RESIDENTIAL DRIVEWAY WITH SIDEWALK AWAY FROM CURB

City of West Linn | DATE: 2010 | DRAWING NO. WL-503A | FILE NO.

THIS DETAIL DRAWING SHALL NOT BE ALTERED OR CHANGED IN ANY MANNER EXCEPT BY THE CITY ENGINEER. IT IS THE RESPONSIBILITY OF THE USER TO ACQUIRE THE MOST CURRENT VERSION OF THE DETAIL.

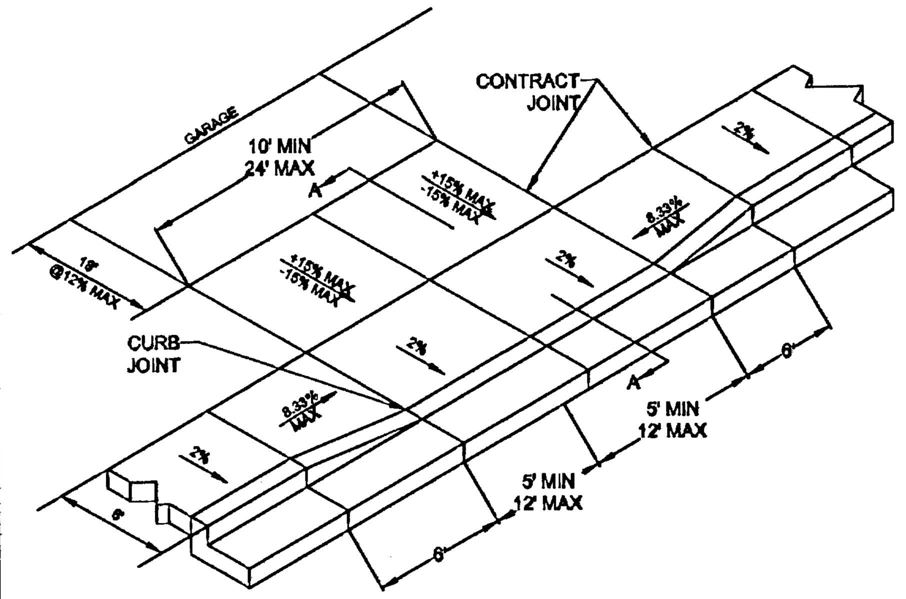

SIDEWALK ADJACENT TO CURB

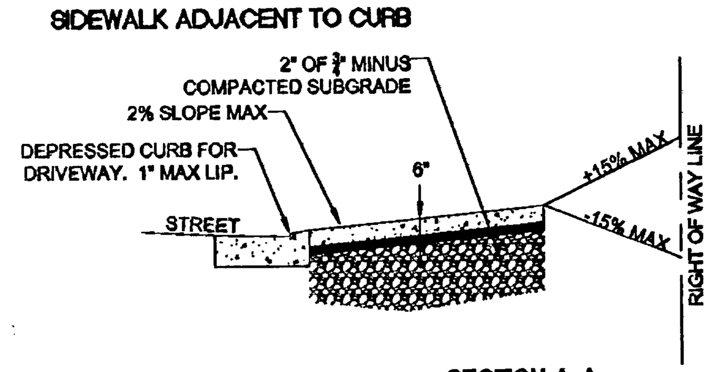

SECTION A-A

NOTE:
1. CONCRETE SHALL HAVE A MINIMUM BREAKING STRENGTH OF 3300 PSI AFTER 28 DAYS 6 SACK MIX
2. CURB SHALL BE TROWELED JOINT WITH MIN. 1/2" RADIUS ALONG BACK OF CURB
3. DRIVEWAY SHALL BE A MINIMUM 6" THICK
4. DRIVEWAY CURB CUT SHALL COMPLY WITH THE CONDITIONS OF 5.0070, "WIDTH AND LOCATION OF CURB CUTS"
5. FOR REPLACEMENT OF EXISITNG APPROACH:
   A. MUST MEET CURRENT ADA REQUIREMENTS TO GREATEST DEGREE POSSIBLE
   B. DAMAGED ROADWAY MUST BE SAWCUT AND REPAVED WITH CLASS C HOT MIX ASPHALT

RESIDENTIAL DRIVEWAY WITH SIDEWALK ADJACENT TO CURB

City of West Linn | DATE: 2010 | DRAWING NO. WL-503B | FILE NO.

THIS DETAIL DRAWING SHALL NOT BE ALTERED OR CHANGED IN ANY MANNER EXCEPT BY THE CITY ENGINEER. IT IS THE RESPONSIBILITY OF THE USER TO ACQUIRE THE MOST CURRENT VERSION OF THE DETAIL.

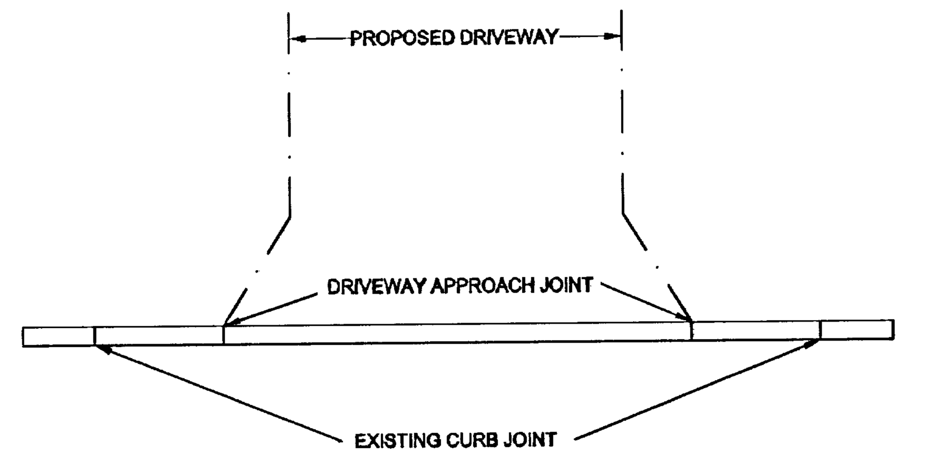

NOTE:
1. FOR THE INSTALLATION OF A DRIVEWAY APPROACH, THE REMOVAL OF CURB SHALL ADHERE TO THE FOLLOWING:
   A. FOR STANDARD CURB, IF THE EXISTING CURB JOINT IS 8 FEET OR LESS FROM THE DRIVEWAY APPROACH JOINT, REMOVAL SHALL BE TO THE EXISTING CURB JOINT.
   B. IF THE EXISTING CURB JOINT IS MORE THAN 8 FEET FROM THE DRIVEWAY APPROACH JOINT, OR IF THE AREA IS CURB & GUTTER, THEN THE TOP AND FACE OF THE CURB SHALL BE SAW-CUT TO A MINIMUM DEPTH OF 2" PRIOR TO REMOVAL.
   C. THE REMOVAL OF CURB TO THE EXISTING CURB JOINT MAY BE ADJUSTED UPON THE CITY'S APPROVAL.
2. THE CONTRACTOR SHALL BE RESPONSIBLE FOR REPLACEMENT OF CURB DAMAGED DUE TO CONSTRUCTION. AN INSPECTION OF THE CURBS SHALL BE PERFORMED PRIOR TO FINAL APPROVAL FOR OCCUPANCY. REMOVED SECTIONS CANNOT BE SMALLER THAN 4'.
3. IF CONTRACTOR ELECTS TO REMOVE ONLY THE CURB FACE OF CURB AND GUTTER INSTALLATIONS, REBAR DOWELING WILL BE REQUIRED. DOWELS SHALL BE PLACED AT 18"-24" ON CENTER PERPENDICULAR TO THE THE CURB (AND BENT UP VERTICALLY INTO THE FUTURE FACE OF CURB) WITH AT LEAST ONE REBAR RUNNING PARALLEL TO THE CURB.

CURB REMOVAL AND DAMAGE INSPECTION

City of West Linn | DATE: 2010 | DRAWING NO. WL-505 | FILE NO.

THIS DETAIL DRAWING SHALL NOT BE ALTERED OR CHANGED IN ANY MANNER EXCEPT BY THE CITY ENGINEER. IT IS THE RESPONSIBILITY OF THE USER TO ACQUIRE THE MOST CURRENT VERSION OF THE DETAIL.

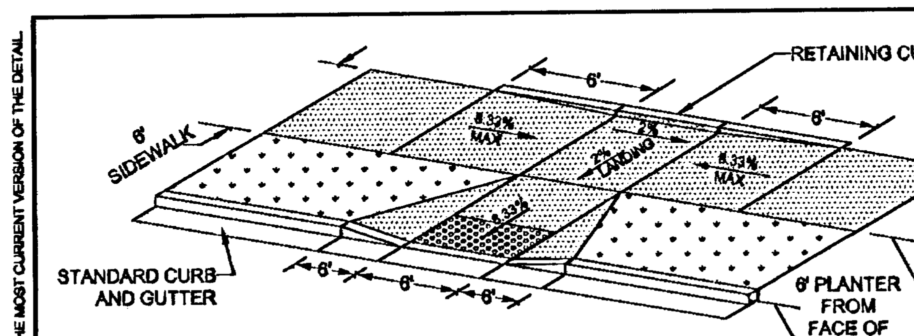

PARALLEL CURB RAMP

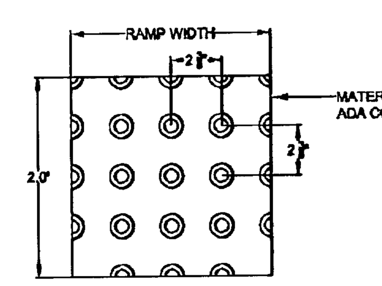

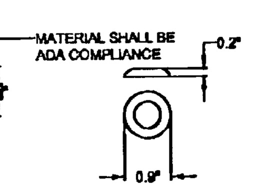

RAMP TEXTURE PATTERN DETAIL

TRUNCATED DOME DETAIL

NOTE:
1. LANDING AT TOP OF RAMP SHALL NOT EXCEED 2% IN ANY DIRECTION AND SHALL BE A MINIMUM OF 60" x 60".
2. RAMP CROSS SLOPE SHALL NOT EXCEED 2% (AS MEASURED PERPENDICULAR TO PEDESTRIAN TRAFFIC FLOW).
3. TRUNCATED DOME MUST EXTEND THE FULL WIDTH OF THE RAMP AND COVER THE FIRST 2 FEET OF THE RAMP CLOSEST TO THE STREET.
4. TRANSITIONS FROM THE RAMP TO THE WALKWAY, GUTTER, AND STREET MUST BE FLUSH (LEVEL) AND FREE OF ABRUPT LEVEL CHANGES.
5. THE GUTTER OR ADJACENT ROADWAY MUST HAVE A SLOPE OF NO MORE THAN 5 PERCENT (1:20) TOWARD THE RAMP.
6. FLARED SIDES ("WING") OF THE CURB RAMP SHALL NOT EXCEED 10% IN SLOPE (8.33% IF PEDESTRIAN TRAVEL IS REQUIRED OVER THEM PER ADA STANDARDS - I.E. IF MINIMUM 48" x 48" (FOR EXISTING SITES ONLY) LANDING IS NOT PROVIDED AT TOP OF RAMP).
7. CONCRETE STRENGTH SHALL BE 3300 PSI.
8. PLACE CONTRACTION JOINTS AS SHOWN ABOVE.
9. NO ABOVE GROUND UTILITIES ARE PERMITTED WITHIN RAMP AREA.

PARALLEL CURB RAMP WITH RETAINING CURB

City of West Linn | DATE: 2010 | DRAWING NO. WL-506B | FILE NO.

THIS DETAIL DRAWING SHALL NOT BE ALTERED OR CHANGED IN ANY MANNER EXCEPT BY THE CITY ENGINEER. IT IS THE RESPONSIBILITY OF THE USER TO ACQUIRE THE MOST CURRENT VERSION OF THE DETAIL.

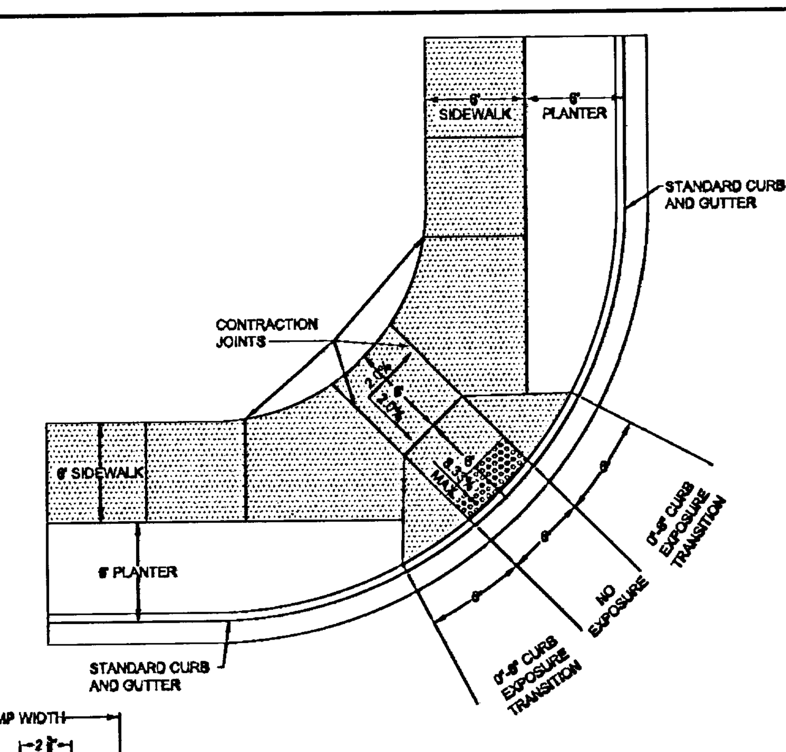

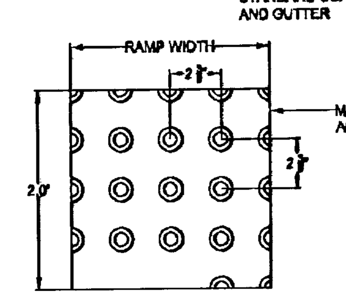

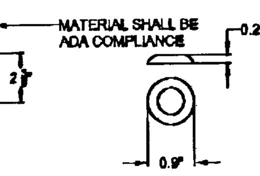

RAMP TEXTURE PATTERN DETAIL

TRUNCATED DOME DETAIL

NOTE:
1. LANDING AT TOP OF RAMP SHALL NOT EXCEED 2% IN ANY DIRECTION AND SHALL BE A MINIMUM OF 60" x 60".
2. RAMP CROSS SLOPE SHALL NOT EXCEED 2% (AS MEASURED PERPENDICULAR TO PEDESTRIAN TRAFFIC FLOW).
3. TRUNCATED DOME MUST EXTEND THE FULL WIDTH OF THE RAMP AND COVER THE FIRST 2 FEET OF THE RAMP CLOSEST TO THE STREET.
4. TRANSITIONS FROM THE RAMP TO THE WALKWAY, GUTTER, AND STREET MUST BE FLUSH (LEVEL) AND FREE OF ABRUPT LEVEL CHANGES.
5. THE GUTTER OR ADJACENT ROADWAY MUST HAVE A SLOPE OF NO MORE THAN 5 PERCENT (1:20) TOWARD THE RAMP.
6. FLARED SIDES ("WING") OF THE CURB RAMP SHALL NOT EXCEED 10% IN SLOPE (8.33% IF PEDESTRIAN TRAVEL IS REQUIRED OVER THEM PER ADA STANDARDS - I.E. IF MINIMUM 48" x 48" (FOR EXISTING SITES ONLY) LANDING IS NOT PROVIDED AT TOP OF RAMP).
7. CONCRETE STRENGTH SHALL BE 3300 PSI.
8. PLACE CONTRACTION JOINTS AS SHOWN ABOVE.
9. NO ABOVE GROUND UTILITIES ARE PERMITTED WITHIN RAMP AREA.
10. WHEN EITHER OPPOSING CURB RAMP HAS AN EXISTING TWIN RAMP, USE DETAIL WL-507B.

SINGLE CURB RAMP (ALLOWED WITH CITY ENGINEER APPROVAL ONLY)

City of West Linn | DATE: 2010 | DRAWING NO. WL-507A | FILE NO.

DESIGN GROUP
THE SAUNDERS COMPANY
901 N. Brutscher, Ste. 202
Newberg, Oregon 97132
Phone: 503-537-9347
www.thesaunderscompany.net

7/31/12

REGISTERED PROFESSIONAL ENGINEER
50644PE
OREGON
SEPT. 14, 1999
CHARLES EDWARD GREGORY

RENEWS: JUNE 30, 20 13

J.T. SMITH companies

Teresa's Vineyard
Public Improvements
Sub-07-02/NDW-07-02/VAR-07-01
West Linn, Oregon

REV	DATE	SUMMARY
1	8/5/11	Client/Agency Comments
2	8/30/11	Agency Comments
	7/2/12	Add'l As Built
	1/27/12	As Built

Project #: 9130 Drawn: CL

CITY OF WEST LINN STANDARD PLANS AND DETAILS STREETS

Date: April 15, 2011

C6.5

\\SERVER\Land Projects\9130\ENGINEERING\Construction Documents\Drawings\Permit Submittal\9130-DETAILS.dwg, 7/24/2012 9:53:44 AM, The Saunders Company

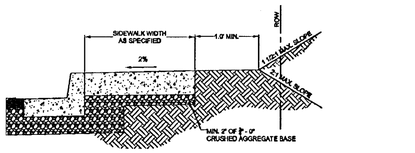

TYPICAL CURB TIGHT SIDEWALK

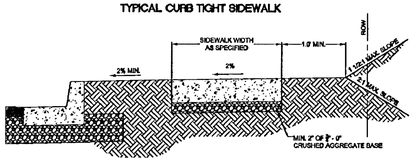

SIDEWALK AWAY FROM CURB

NOTE:

1. CONCRETE SHALL BE 3300 PSI AT 28 DAYS.
2. PANEL LENGTHS SHALL BE EQUAL TO THE SIDEWALK WIDTH, BUT MAY BE ADJUSTED WITH THE CITY ENGINEER'S APPROVAL.
3. CONTRACTION JOINTS (1/3RD OF THE THICKNESS OF CONCRETE) SHALL BE PLACED EVERY THIRD PANEL, WITH A MAX. SPACING OF 15 FEET. JOINTS SHALL ALSO BE PLACED AT THE SIDES OF DRIVEWAY APPROACHES, UTILITY VAULTS, AND WHEELCHAIR RAMPS.
4. A CURING COMPOUND SHALL BE USED. WHITE REFLECTIVE SHEETING SHALL BE USED IN CASE OF RAIN.
5. FOR SIDEWALKS ADJACENT TO THE CURB AND POURED AT THE SAME TIME AS THE CURB, THE JOINT BETWEEN THEM SHALL BE A TROWELED JOINT WITH A MIN. 1/2" RADIUS.
6. THE SIDEWALK SHALL HAVE A MIN. THICKNESS OF 6" IF THE SIDEWALK IS INTENDED AS A PORTION OF THE THE DRIVEWAY. OTHERWISE, THE SIDEWALK SHALL HAVE A MIN. THICKNESS OF 4".
7. DRAIN BLOCKOUTS IN THE CURB SHALL BE EXTENDED TO THE BACK OF THE SIDEWALK WITH A 3" DIAMETER PLASTIC PIPE AT A 2% SLOPE. A CONTRACTION JOINT SHALL BE PLACED OVER THE PIPE.

CONCRETE SIDEWALK CROSS SECTION

City of West Linn | DATE: 2010 | DRAWING NO. WL-508 | FILE NO.

THIS DETAIL DRAWING SHALL NOT BE ALTERED OR CHANGED IN ANY MANNER EXCEPT BY THE CITY ENGINEER. IT IS THE RESPONSIBILITY OF THE USER TO ACQUIRE THE MOST CURRENT VERSION OF THE DETAIL.

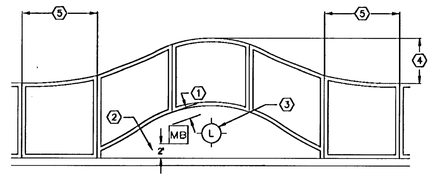

SPECIFICATIONS:

1. MIN. 3' CLEARANCE BETWEEN FACE OF SIDEWALK & CLOSEST POINT ON BACK OF MAILBOX.
2. CENTER OF MAILBOX SHALL BE 2' FROM FACE OF CURB.
3. LIGHT POLES & FIRE HYDRANTS ARE TO BE CENTERED IN ISLAND.
4. 2' FOR FIRE HYDRANTS & LIGHTPOLES
   3' FOR MAILBOXES
5. THE REVERSE CURVE SHALL EXTEND 5' BEYOND THE RE-ROUTED AREA.

NOTE:

1. SIDEWALKS TO BE RE-ROUTED AROUND ALL LIGHT POLES, MAILBOXES, & FIRE HYDRANTS THAT EXIST IN THE SIDEWALK AREA.
2. MAILBOXES SHALL NOT BE INSTALLED ADJACENT TO FIRE HYDRANTS.
3. SIDEWALKS SHALL NOT BE RE-ROUTED IF EXISTING METER BOXES, UTILITY POLES, ETC., WILL BE IN RE-ROUTED SIDEWALK. A MINIMUM UNOBSTRUCTED SIDEWALK WIDTH MUST BE MAINTAINED PER ADA STANDARDS.
4. IF THE SIDEWALK IS IN PLACE PRIOR TO THE INSTALLATION OF THE LIGHT POLE, MAILBOX, OR FIRE HYDRANT, THEN THE SIDEWALK SHALL BE REMOVED AND RE-ROUTED.

CONCRETE SIDEWALK CLEARANCES FOR CURB TIGHT SIDEWALKS

City of West Linn | DATE: 2010 | DRAWING NO. WL-509 | FILE NO.

THIS DETAIL DRAWING SHALL NOT BE ALTERED OR CHANGED IN ANY MANNER EXCEPT BY THE CITY ENGINEER. IT IS THE RESPONSIBILITY OF THE USER TO ACQUIRE THE MOST CURRENT VERSION OF THE DETAIL.

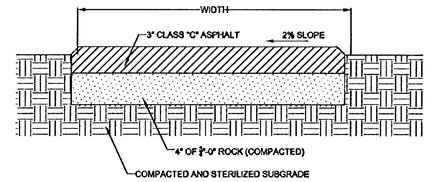

-OR-

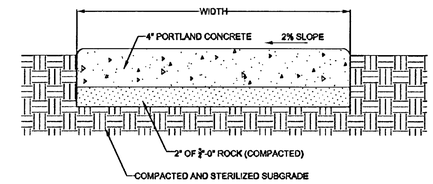

NOTE:

1. CONCRETE SHALL BE 3300 PSI AT 28 DAYS.
2. SIDEWALK PANELS SHALL BE SQUARE, 3/4" DEEP SCRIBES AT JOINTS, EDGED (I.E SHINE) ON 4 SIDES AND HAVE A LIGHT BROOM FINISH.
3. PEDESTRIAN PATH OR BIKEWAY SHALL HAVE A MINIMUM WIDTH OF 6 FEET.

PEDESTRIAN PATH OR BIKEWAY

City of West Linn | DATE: 2010 | DRAWING NO. WL-510 | FILE NO.

THIS DETAIL DRAWING SHALL NOT BE ALTERED OR CHANGED IN ANY MANNER EXCEPT BY THE CITY ENGINEER. IT IS THE RESPONSIBILITY OF THE USER TO ACQUIRE THE MOST CURRENT VERSION OF THE DETAIL.

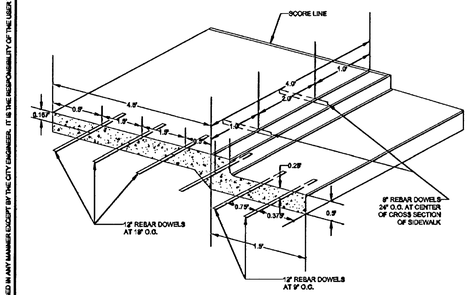

CURB, GUTTER AND SIDEWALK DOWELING DETAIL

City of West Linn | DATE: 2010 | DRAWING NO. WL-511 | FILE NO.

THIS DETAIL DRAWING SHALL NOT BE ALTERED OR CHANGED IN ANY MANNER EXCEPT BY THE CITY ENGINEER. IT IS THE RESPONSIBILITY OF THE USER TO ACQUIRE THE MOST CURRENT VERSION OF THE DETAIL.

RECORD DRAWINGS

Prepared By: Chuck Gregory, P.E. Date: 7/31/12

THESE RECORD DRAWINGS HAVE BEEN PREPARED, IN PART, ON THE BASIS OF AS-BUILT INFORMATION COMPILED BY THE CONTRACTOR AND PERIODIC OBSERVATIONS DURING CONSTRUCTION. THE INFORMATION CONTAINED IN THESE DRAWINGS ARE TO THE BEST OF MY KNOWLEDGE AN ACCURATE RECORD OF THE CONSTRUCTED PUBLIC IMPROVEMENTS. IT IS RECOMMENDED THAT USERS OF THESE DRAWINGS FIELD VERIFY UTILITY SIZES, LOCATIONS AND ELEVATIONS.

THE SAUNDERS COMPANY
DESIGN GROUP
901 N. Brutscher, Ste. 202
Newberg, Oregon 97132
Phone: 503-537-9347
www.thesaunderscompany.net

REGISTERED PROFESSIONAL ENGINEER — CHARLES EDWARD GREGORY — OREGON — SEPT. 14, 1999

RENEWS: JUNE 30, 2013

J.T. SMITH companies

Teresa's Vineyard
Public Improvements
Sub-07-02/NDW-07-02/VAR-07-01
West Linn, Oregon

REV	DATE	SUMMARY
1	8/5/11	Client/Agency Comments
2	8/30/11	Agency Comments
	7/2/12	Add'l As Built
	1/27/12	As Built

Project #: 9130 Drawn: CL

CITY OF WEST LINN STANDARD PLANS AND DETAILS STREETS

Date: April 15, 2011

C6.6

\\SERVER\Land Projects\9130\ENGINEERING\Construction Documents\Drawings\Permit Submittal\9130-XETAILS.dwg, 7/24/2012 9:53:59 AM, The Saunders Company

THIS DETAIL DRAWING SHALL NOT BE ALTERED OR CHANGED IN ANY MANNER EXCEPT BY THE CITY ENGINEER. IT IS THE RESPONSIBILITY OF THE USER TO ACQUIRE THE MOST CURRENT VERSION OF THE DETAIL.

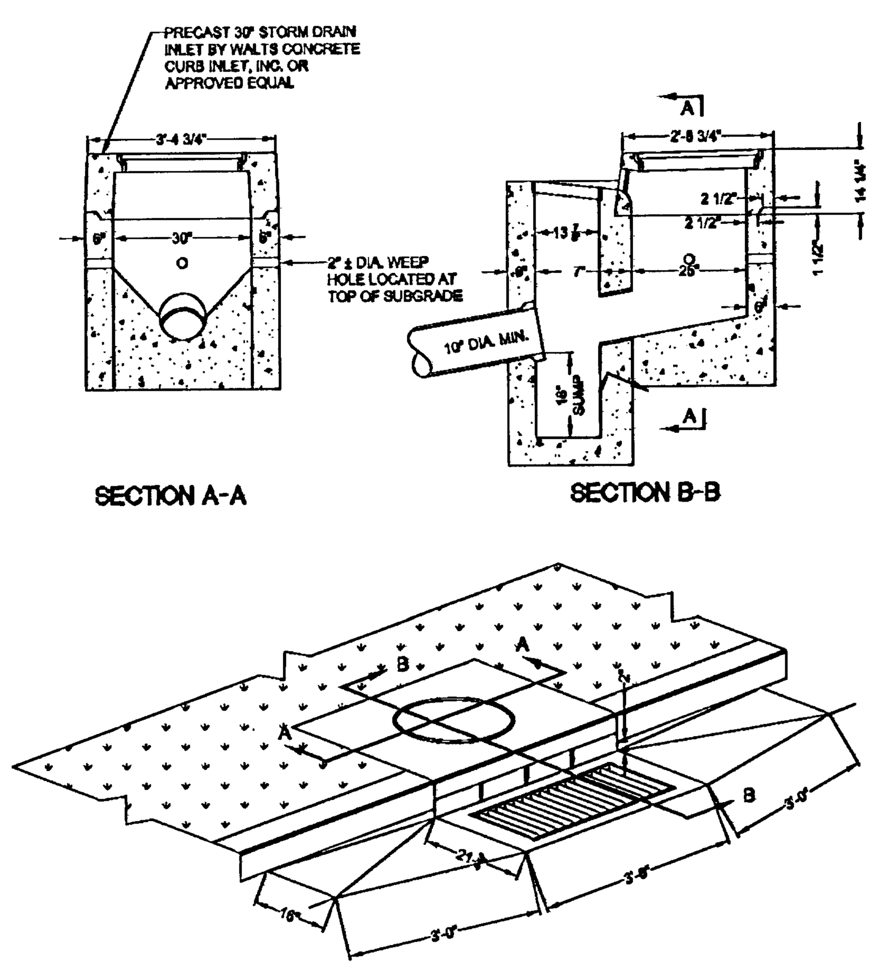

NOTE:

1. CAST IN PLACE CONCRETE TO BE 3300 PSI AND WEEP HOLE WITH GALVINIZED MESH. SCREEN ON MIN. 3 SIDES OF INLET.
2. MANHOLE RIMS AND COVERS AS MANUFACTURED BY HERN IRON WORKS, COEUR D' ALENE, IDAHO. COVER PATTERN NO. 2312, RIM PATTERN NO. 2311 OR APPROVED EQUAL.

COMBINATION CURB INLET

City of West Linn | DATE: 2010 | DRAWING NO. WL-601 | FILE NO.

THIS DETAIL DRAWING SHALL NOT BE ALTERED OR CHANGED IN ANY MANNER EXCEPT BY THE CITY ENGINEER. IT IS THE RESPONSIBILITY OF THE USER TO ACQUIRE THE MOST CURRENT VERSION OF THE DETAIL.

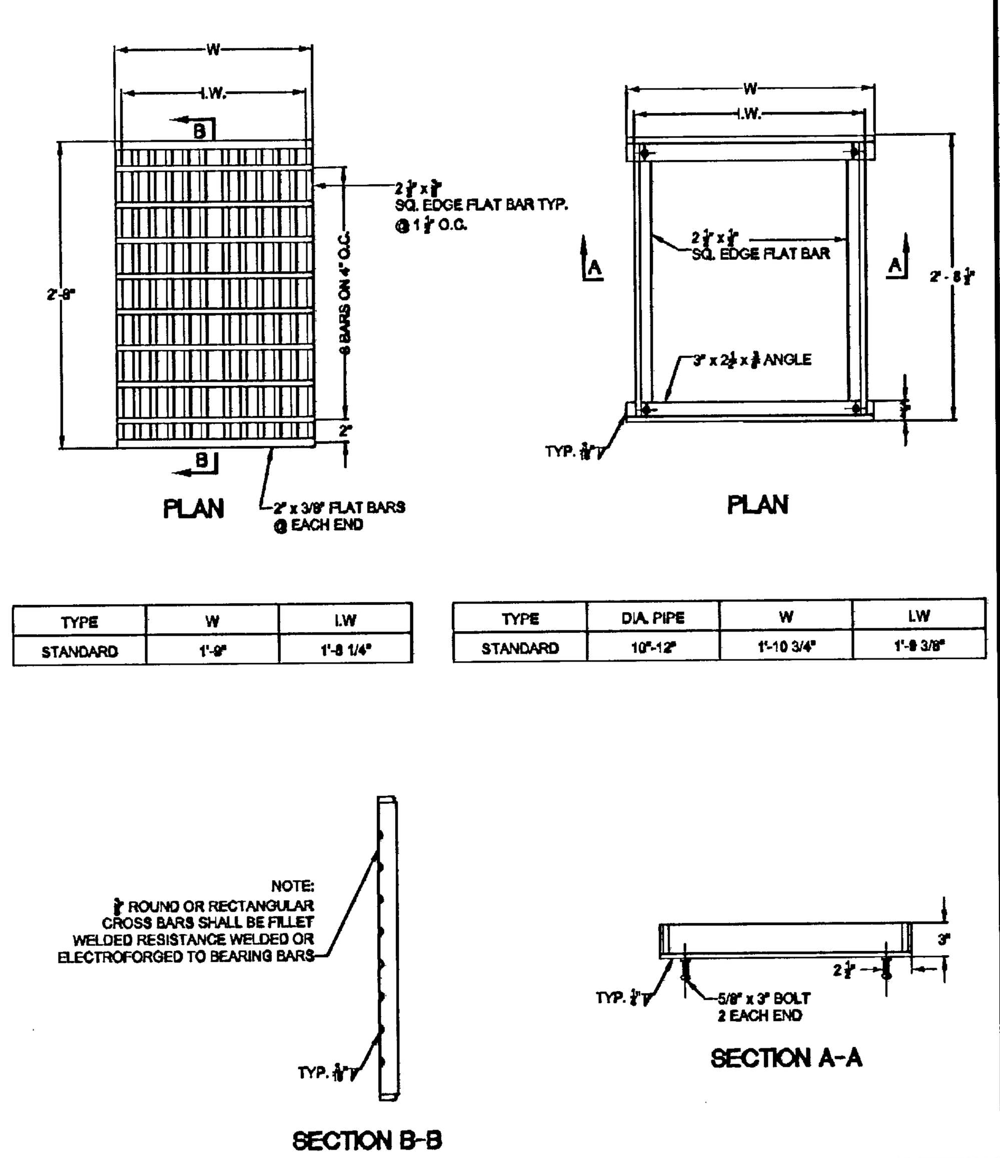

TYPE	W	I.W.
STANDARD	1'-9"	1'-8 1/4"

TYPE	DIA. PIPE	W	I.W.
STANDARD	10"-12"	1'-10 3/4"	1'-9 3/8"

NOTE:

USE VERTICAL BEADS IN CORNERS, FILLET WELD JOINT ON BOTTOM OF FRAME. GRATE MUST REST FLAT ON FRAME SURFACE.

FRAME AND GRATE FOR GUTTER AND CURB INLET

City of West Linn | DATE: 2010 | DRAWING NO. WL-602B | FILE NO.

THIS DETAIL DRAWING SHALL NOT BE ALTERED OR CHANGED IN ANY MANNER EXCEPT BY THE CITY ENGINEER. IT IS THE RESPONSIBILITY OF THE USER TO ACQUIRE THE MOST CURRENT VERSION OF THE DETAIL.

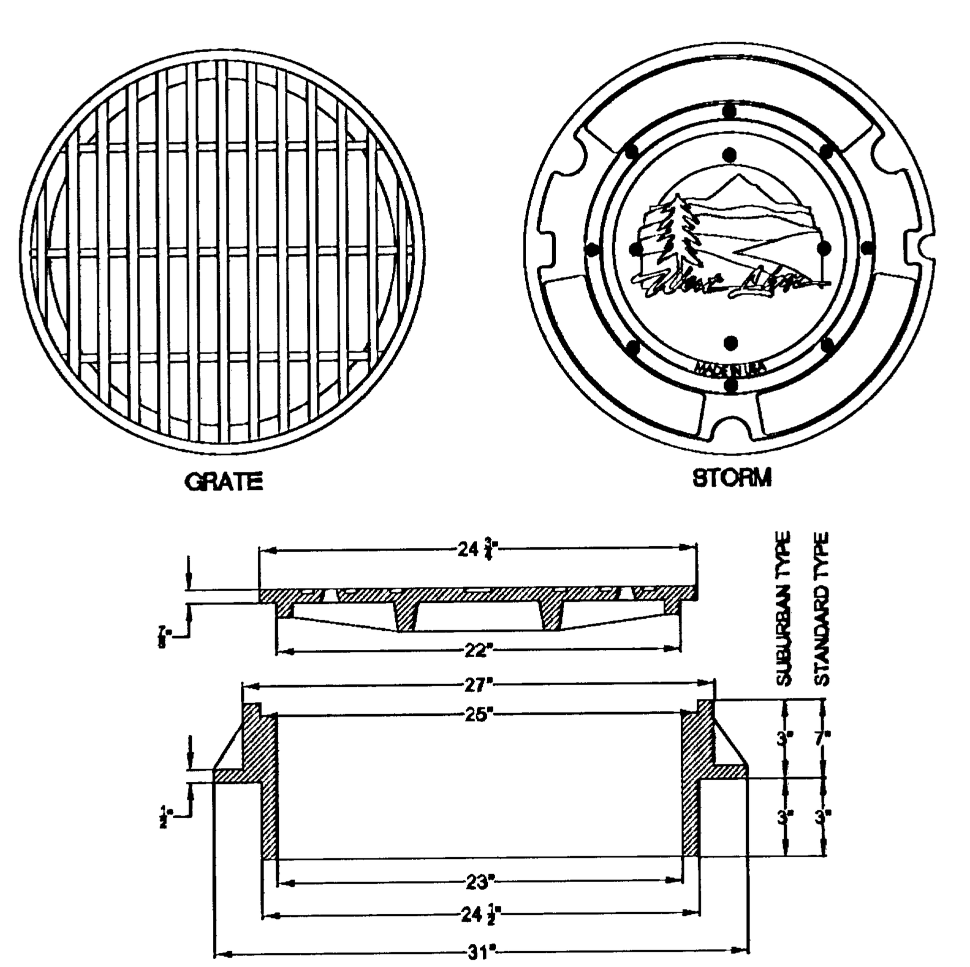

NOTE:

1. USE SUBURBAN TYPE ONLY IN NON-TRAFFIC AREAS, AND ONLY WITH APPROVAL BY THE CITY.
2. COVER AND FRAME SHALL BE GRAY CAST IRON ASTM A-48 CLASS 30.
3. COVER AND FRAME TO BE MACHINED TO A TRUE BEARING ALL AROUND.
4. NOTCH LID FOR LIFTING HOOK.
5. OPEN GRATES REQUIRE APPROVAL BY CITY, AND MUST BE BICYCLE SAFE IF USED IN TRAFFIC AREAS.

MANHOLE FRAME AND COVER

City of West Linn | DATE: 2010 | DRAWING NO. WL-605 | FILE NO.

THIS DETAIL DRAWING SHALL NOT BE ALTERED OR CHANGED IN ANY MANNER EXCEPT BY THE CITY ENGINEER. IT IS THE RESPONSIBILITY OF THE USER TO ACQUIRE THE MOST CURRENT VERSION OF THE DETAIL.

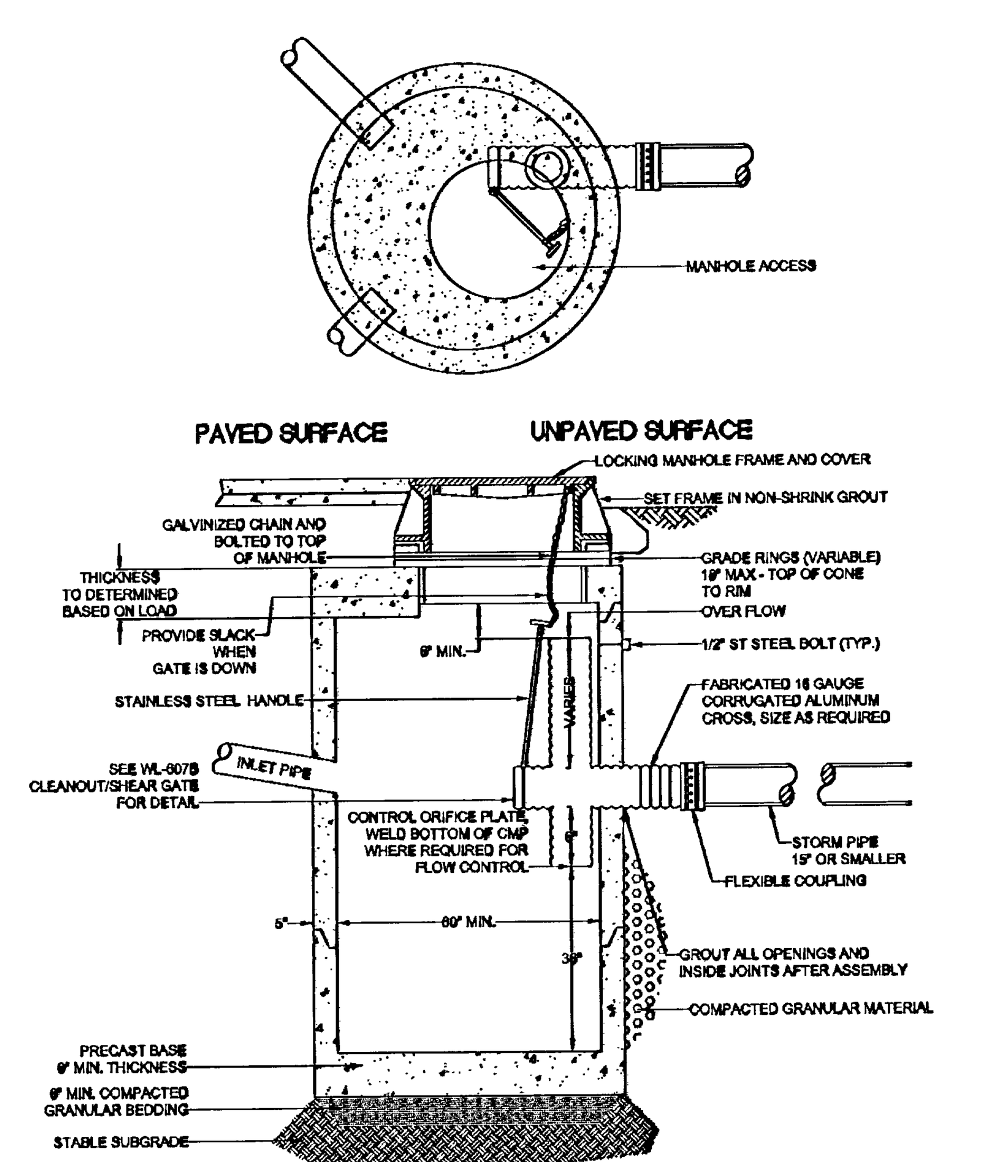

NOTE:

1. ALL PRECAST SECTIONS SHALL CONFORM TO THE REQUIREMENTS OF ASTM C-478.
2. DISTANCE FROM TOP OF OVERFLOW TO MH RIM SHALL BE BASED ON OVERFLOW CAPACITY CALC'S BY DESIGN ENGINEER. ASSUME ORIFICE CONTROL.
3. 72" MINIMUM DIA. MANHOLE REQUIRED FOR OUTLET OR INLET > 21".
4. NO STEPS REQUIRED.

POLLUTION/FLOW CONTROL MANHOLE

City of West Linn | 2010 | DRAWING NO. WL-607A | FILE NO.

THIS DETAIL DRAWING SHALL NOT BE ALTERED OR CHANGED IN ANY MANNER EXCEPT BY THE CITY ENGINEER. IT IS THE RESPONSIBILITY OF THE USER TO ACQUIRE THE MOST CURRENT VERSION OF THE DETAIL.

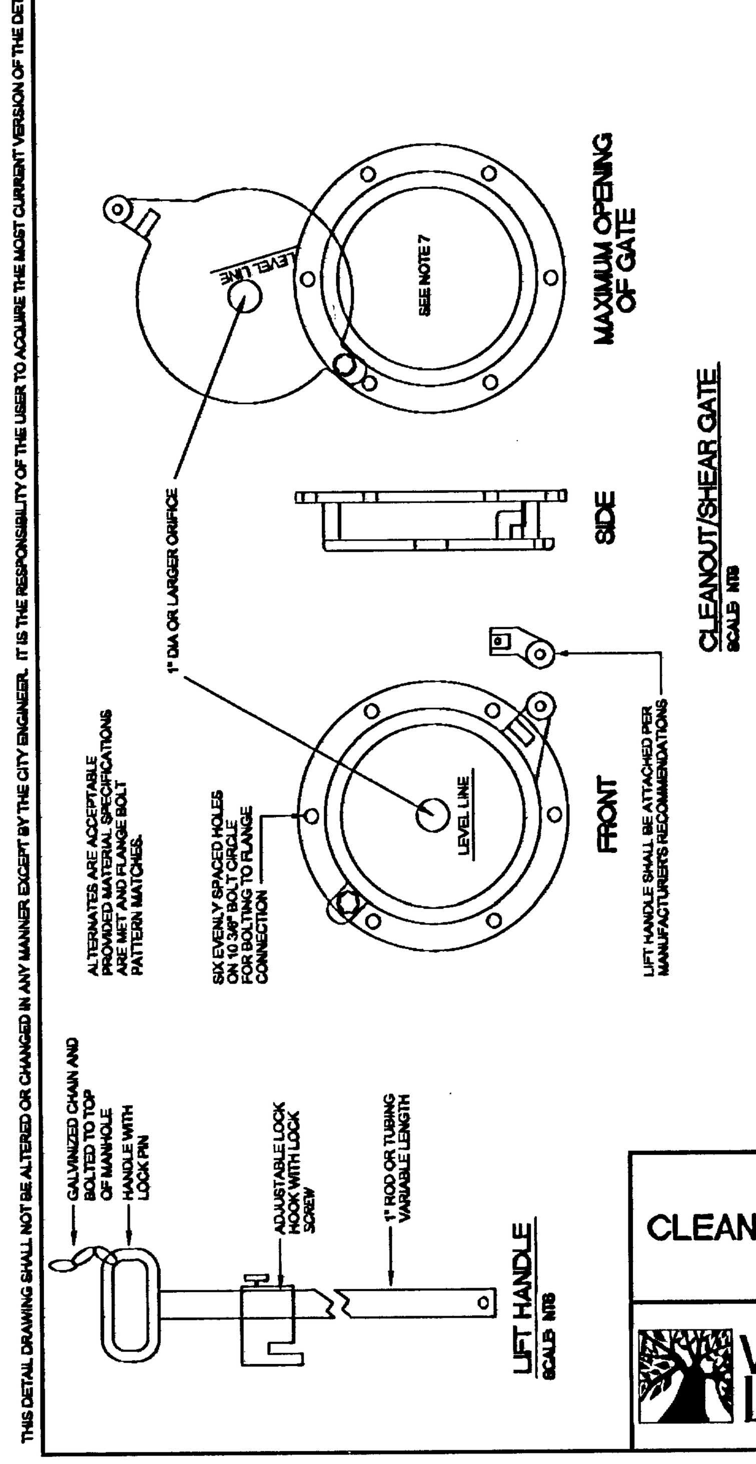

CLEANOUT/SHEAR GATE
SCALE: NTS

NOTE:

1. CLEANOUT/SHEAR GATE AND LIFT HANDLE SHALL BE ALUMINUM ALLOY PER ASTM B-26-ZG-32a.
2. LIFT HANDLE EITHER SOLID OR TUBING WITH ADJUSTABLE HOOK AS REQUIRED.
3. NEOPRENE RUBBER GASKET REQUIRED BETWEEN RISER MOUNTING FLANGE AND GATE FLANGE.
4. MATING SURFACES OF LID AND BODY TO BE MACHINED FOR PROPER FIT.
5. FLANGE MOUNTING BOLTS SHALL BE 3/8" DIAMETER STAINLESS STEEL.
6. ALTERNATE CLEANOUT/SHEAR GATES TO THE DESIGN SHOWN ARE ACCEPTABLE, PROVIDED THEY MEET THE MATERIAL SPECIFICATIONS ABOVE AND HAVE A SIX BOLT, 10 3/8" BOLT CIRCLE FOR BOLTING THE FLANGE CONNECTION.
7. GATE SHALL NOT OPEN BEYOND THE CLEAR OPENING BY LIMITED HINGE MOVEMENT, STOP TAB, OR SOME OTHER DEVICE.

CLEANOUT/SHEAR GATE

City of West Linn | DATE: 2010 | DRAWING NO. WL-607B | FILE NO.

THIS DETAIL DRAWING SHALL NOT BE ALTERED OR CHANGED IN ANY MANNER EXCEPT BY THE CITY ENGINEER. IT IS THE RESPONSIBILITY OF THE USER TO ACQUIRE THE MOST CURRENT VERSION OF THE DETAIL.

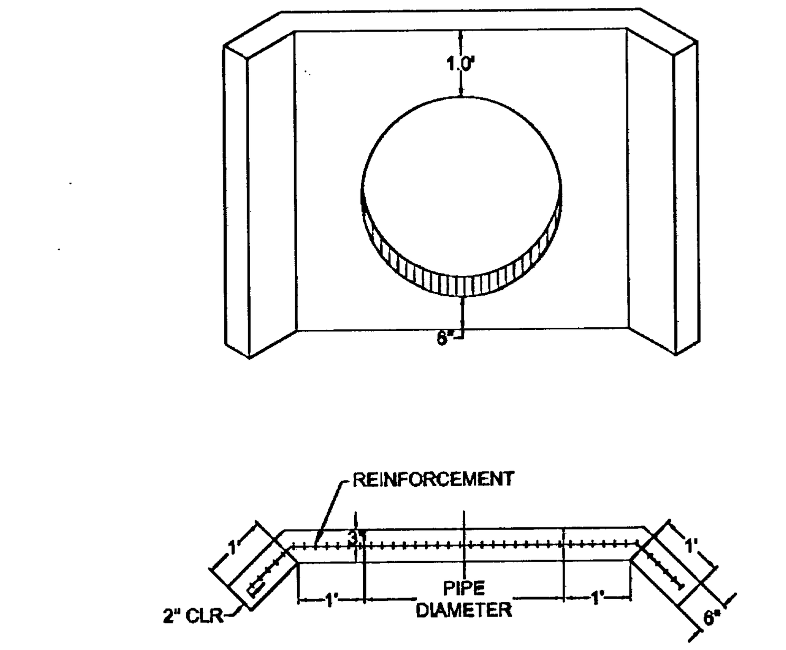

NOTE:

1. USE CONCRETE HAVING A 28 DAY DESIGN STRENGTH OF 3300 PSI.
2. OUTLET WING WALL SHALL BE USED FOR ALL OUTFALL PIPES FROM 10" TO 36".
3. THIS DETAIL REPRESENTS THE MINIMUM REQUIREMENT. THE NEED FOR ADDITIONAL STEEL, A FOOTING AND DRAINAGE BEHIND THE WALL SHALL BE INVESTIGATED BY THE DESIGN ENGINEER.
4. FOR PIPES LARGER THAN 33" OR MULTIPLE PIPE OUTLETS, USE DETAIL WL-612.
5. CONCRETE REINFORCEMENT SHALL CONSIST OF:

   A) ADDING A POLY-FIBER MESH TO THE CONCRETE MIX OR
   B) USE (2) #4 BARS ABOVE AND BELOW PIPE AND #4 BARS AT 6" O.C. VERTICALLY.

OUTLET HEADWALL (FOR OUTLET PIPES OF 10' TO 33')

City of West Linn | DATE: 2010 | DRAWING NO. WL-613 | FILE NO.

THIS DETAIL DRAWING SHALL NOT BE ALTERED OR CHANGED IN ANY MANNER EXCEPT BY THE CITY ENGINEER. IT IS THE RESPONSIBILITY OF THE USER TO ACQUIRE THE MOST CURRENT VERSION OF THE DETAIL.

D = PIPE DIAMETER
W = BOTTOM WIDTH OF CHANNEL
P = WETTED PERIMETER OF CHANNEL

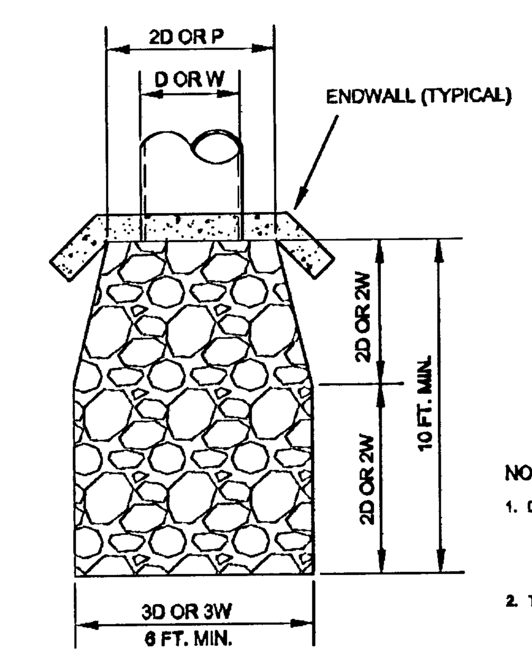

DESIGN VELOCITY FT./SEC	ROCK CLASSIFICATION BY WEIGHT
6 - 10	200 LBS.
10 - 12	1/4 TON
12 - 14	1/2 TON
14 - 16	1 TON
16 - 18	2 TON

SELECTION OF RIP RAP (SEE NOTE 1)

NOTE:

1. DIMENSIONS FOR RIP RAP APPLY TO FLOWS
   < 2 CFS RIP RAP FOR FLOWS
   > 2 CFS MUST BE DESIGNED BY AN ENGINEER
   FLOWS > 20 FPS SHALL USE ENERGY DISSIPATOR
2. TYPE OF RIP RAP
   A. REGULAR QUARRY STONE CLASS 50-200
   B. COBBLESTONE
   C. CONCRETE (ONLY ALLOWED UPON APPROVAL OF THE CITY)
3. PLACEMENT
   A. MINIMUM DEPTH = 1 1/2 TIMES AVERAGE STONE SIZE.
   B. ROCKS SHALL BE PLACED TO PROVIDE A MINIMUM OF VOIDS.
   C. SURFACE ROCKS OR CONCRETE SHALL PROTRUDE AT LEAST 1/2 THEIR VERTICAL DIMENSION.
   D. RIP RAP IS TO BE PLACED OVER A NATURAL BEDDING, OR IT MAY BE GROUTED OR PLACED OVER A GRAVEL BEDDING AS REQUIRED BY THE CITY.

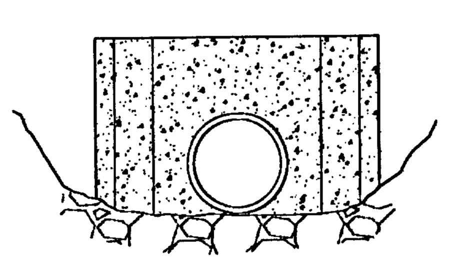

STORM SEWER OUTFALL

City of West Linn | DATE: 2010 | DRAWING NO. WL-614 | FILE NO.

THIS DETAIL DRAWING SHALL NOT BE ALTERED OR CHANGED IN ANY MANNER EXCEPT BY THE CITY ENGINEER. IT IS THE RESPONSIBILITY OF THE USER TO ACQUIRE THE MOST CURRENT VERSION OF THE DETAIL.

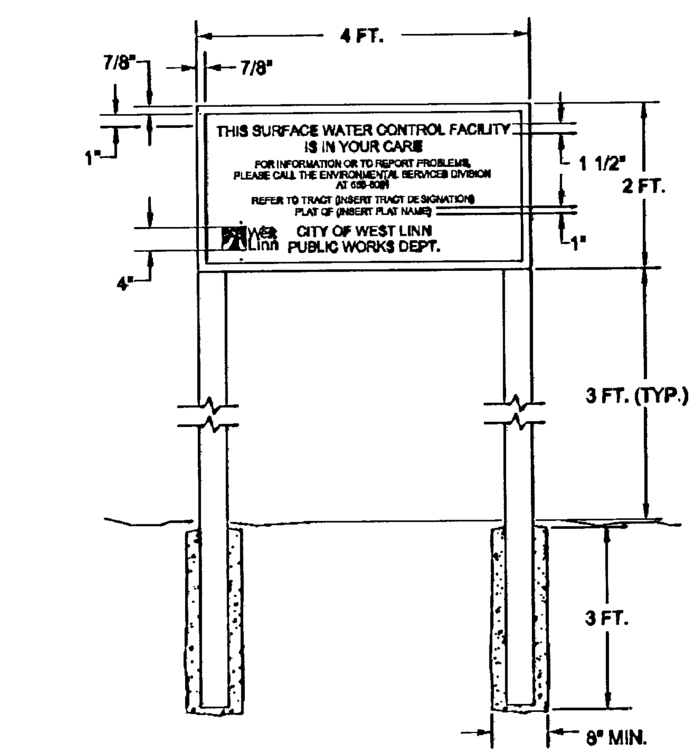

SPECIFICATIONS:

SIZE:	48" x 24"
MATERIAL:	ALUMINUM (.080" THICKNESS)
PAINT:	FACE - 3 COATS OUTDOOR ENAMEL (SPRAYED) BACK - 1 COAT OUTDOOR ENAMEL (SPRAYED)
LETTERING:	SILK SCREEN ENAMEL WHERE POSSIBLE, OR HAND PAINTED ENAMELS
COLOR:	BLACK AND WHITE. WHITE BACKGROUND, LETTERING AND BORDER IN BLACK
TYPE FACE:	HELVETICA. SEE DIMENSIONS SHOWN ABOVE. OUTER BORDER 1/2" WIDTH BLACK
INSTALLATION:	INSTALL ON TWO 8 FT. LONG 4" x 4" POSTS, PRESSURE TREATED, INSTALLED IN 3 FT. DEEP CONCRETE FILLED POST HOLES (8" MIN. DIA.)

SURFACE WATER FACILITY SIGN

City of West Linn | DATE: 2010 | DRAWING NO. WL-615 | FILE NO.

RECORD DRAWINGS

Prepared By: Chuck Gregory, P.E. Date:

THESE RECORD DRAWINGS HAVE BEEN PREPARED, IN PART, ON THE BASIS OF AS-BUILT INFORMATION COMPILED BY THE CONTRACTOR AND PERIODIC OBSERVATIONS DURING CONSTRUCTION. THE INFORMATION CONTAINED IN THESE DRAWINGS ARE TO THE BEST OF MY KNOWLEDGE AN ACCURATE RECORD OF THE CONSTRUCTED PUBLIC IMPROVEMENTS. IT IS RECOMMENDED THAT USERS OF THESE DRAWINGS FIELD VERIFY UTILITY SIZES, LOCATIONS AND ELEVATIONS.

THE SAUNDERS COMPANY
DESIGN GROUP
901 N. Brutscher, Ste. 202
Newberg, Oregon 97132
Phone: 503-537-9347
www.thesaunderscompany.net

7/31/12

REGISTERED PROFESSIONAL ENGINEER 50644PE OREGON SEPT. 14, 1999 CHARLES EDWARD GREGORY

RENEWS: JUNE 30, 2013

J.T. SMITH companies

Teresa's Vineyard
Public Improvements
Sub-07-02/NDW-07-02/VAR-07-01
West Linn, Oregon

REV	DATE	SUMMARY
1	8/5/11	Client/Agency Comments
2	8/30/11	Agency Comments
	7/2/12	Add'l As Built
	1/27/12	As Built

Project #: 9130 Drawn: CL

CITY OF WEST LINN STANDARD PLANS AND DETAILS STORM DRAINAGE

Date: April 15, 2011

C6.7

\\SERVER\Land Projects\9130\ENGINEERING\Construction Documents\Drawings\Permit Submittal\9130-DETAILS.dwg, 7/24/2012 9:54:14 AM, The Saunders Company

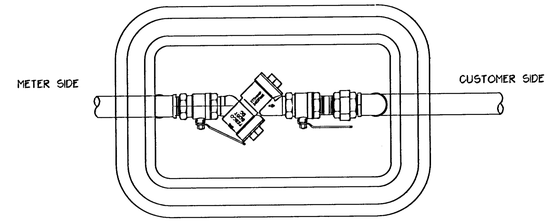

PLAN

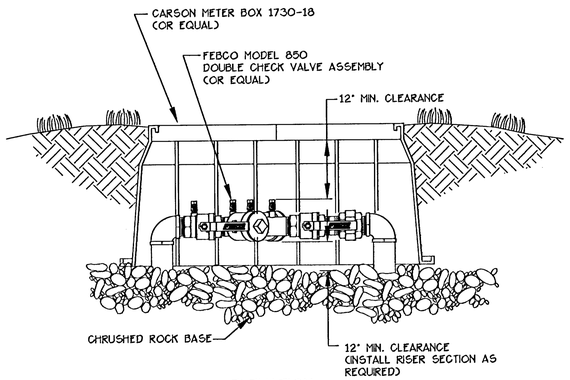

ELEVATION

3/4" - 2" DOMESTIC & IRRIGATION DOUBLE CHECK VALVE ASSEMBLY

SCALE: N.T.S.

1 / C6.8

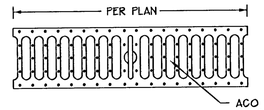

PLAN VIEW

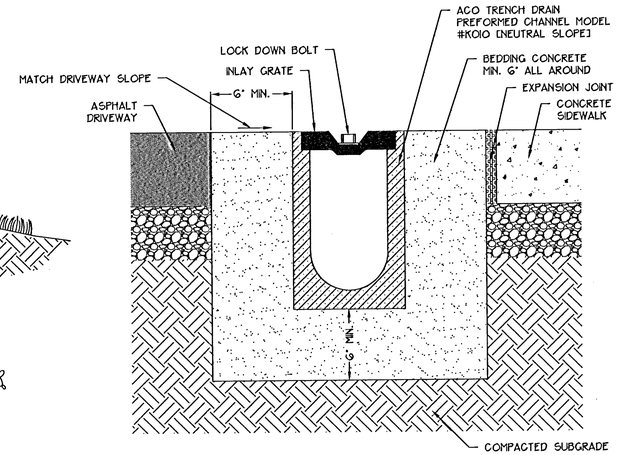

CROSS SECTION VIEW

PREFORMED TRENCH DRAIN

SCALE: N.T.S.

2 / C6.8

The selection and use of this Standard Drawing, while designed in accordance with standard engineering principles and practices, is the sole responsibility of the user.

MINIMUM BEARING AREA OF STRADDLE BLOCK RESTRAINT

NOMINAL PIPE SIZE (IN)	MIN BEARING AREA (SF)	BLOCK SIZE "W"	"D"	"T"
4"	2.0	12"	9"	12"
6"	4.5	12"	9"	12"
8"	8.0	16"	12"	18"
10"	12.5	20"	16"	18"
12"	18.0	24"	20"	18"
> 12"	BY DESIGN ENGINEER			

ABOVE BEARING AREAS ARE BASED ON A TEST PRESSURE OF 150 PSI, A 1.5 FACTOR OF SAFETY, AND AN ALLOWABLE SOIL BEARING STRESS OF 2,000 PSF. TO COMPUTE BEARING AREAS FOR DIFFERENT TEST PRESSURES AND SOIL BEARING STRESSES, USE THE FOLLOWING EQUATION:

Bearing Area = (Test Pressure/150) x (2,000/Soil Bearing Stress) x (Table Value)

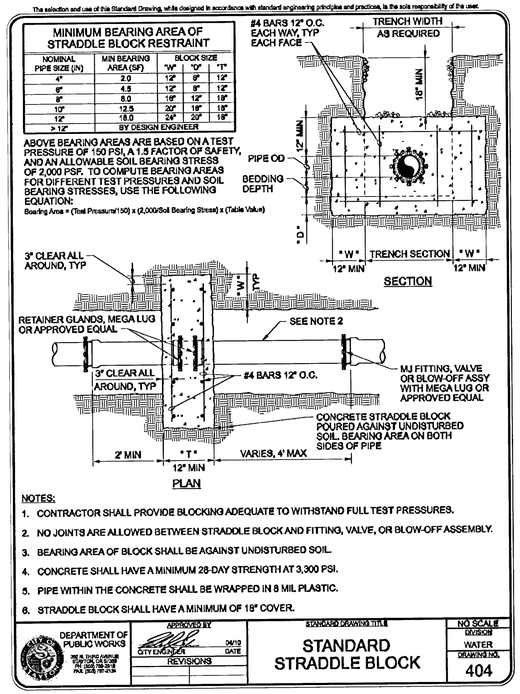

NOTES:

1. CONTRACTOR SHALL PROVIDE BLOCKING ADEQUATE TO WITHSTAND FULL TEST PRESSURES.
2. NO JOINTS ARE ALLOWED BETWEEN STRADDLE BLOCK AND FITTING, VALVE, OR BLOW-OFF ASSEMBLY.
3. BEARING AREA OF BLOCK SHALL BE AGAINST UNDISTURBED SOIL.
4. CONCRETE SHALL HAVE A MINIMUM 28-DAY STRENGTH AT 3,300 PSI.
5. PIPE WITHIN THE CONCRETE SHALL BE WRAPPED IN 8 MIL PLASTIC.
6. STRADDLE BLOCK SHALL HAVE A MINIMUM OF 18" COVER.

DEPARTMENT OF PUBLIC WORKS	APPROVED BY / CITY ENGINEER / DATE	STANDARD DRAWING TITLE	NO SCALE / DIVISION
	REVISIONS	STANDARD STRADDLE BLOCK	WATER / DRAWING NO. 404

STRADDLE BLOCK

SCALE: N.T.S.

3 / C6.8

NOT USED

UTILITY TRENCH RELIEF SUB-DRAIN INSTALLED AT PAVEMENT LOW POINTS

SCALE: N.T.S.

6 / C6.8

MATCH MATERIALS OF EXIST SOLAMO FENCE

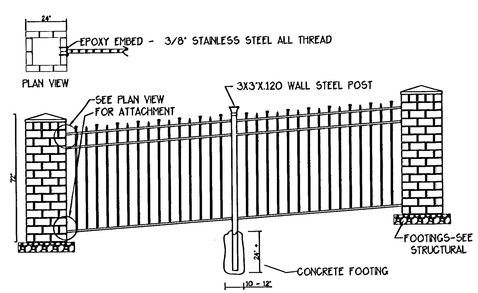

BRICK COLUMNS AND FENCE ELEVATION

SCALE: N.T.S.

4 / C6.8

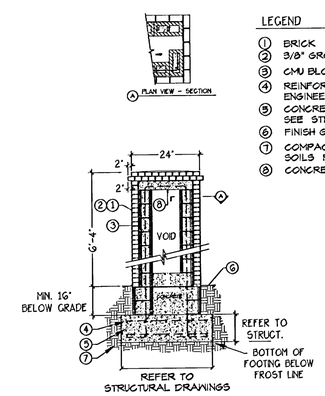

LEGEND

1. BRICK
2. 3/8" GROUT JOINT.
3. CMU BLOCK. GROUT ALL CELLS SOLID.
4. REINFORCING STEEL. SEE STRUCTURAL ENGINEER'S DRAWINGS.
5. CONCRETE FOOTING. 16" BELOW GRADE MINIMUM. SEE STRUCTURAL ENGINEER'S DRAWINGS.
6. FINISH GRADE. SEE GRADING PLANS.
7. COMPACTED SUB-GRADE PER GEOTECHNICAL SOILS REPORT.
8. CONCRETE SUB-SLAB.

BRICK COLUMN SECTION & DETAIL

SCALE: N.T.S.

5 / C6.8

(RECORD DRAWINGS

Prepared By: Chuck Gregory Date: 7/31/12

Chuck Gregory, P.E.

THESE RECORD DRAWINGS HAVE BEEN PREPARED, IN PART, ON THE BASIS OF AS-BUILT INFORMATION COMPILED BY THE CONTRACTOR AND PERIODIC OBSERVATIONS DURING CONSTRUCTION. THE INFORMATION CONTAINED IN THESE DRAWINGS ARE TO THE BEST OF MY KNOWLEDGE AN ACCURATE RECORD OF THE CONSTRUCTED PUBLIC IMPROVEMENTS. IT IS RECOMMENDED THAT USERS OF THESE DRAWINGS FIELD VERIFY UTILITY SIZES, LOCATIONS AND ELEVATIONS.

THE SAUNDERS COMPANY
DESIGN GROUP
901 N. Brutscher, Ste. 202
Newberg, Oregon 97132
Phone: 503-537-9347
www.thesaunderscompany.net

REGISTERED PROFESSIONAL ENGINEER 5064PE OREGON SEPT. 14, 1999 CHARLES EDWARD GREGORY

7/31/12

RENEWS: JUNE 30, 2013

J.T. SMITH companies

Teresa's Vineyard
Public Improvements
Sub-07-02/NDW-07-02/VAR-07-01
West Linn, Oregon

REV	DATE	SUMMARY
1	8/5/11	Client/Agency Comments
2	8/30/11	Agency Comments
	7/2/12	Add'l As Built
	1/27/12	As Built

Project #: 9130 Drawn: TGL

MISCELLANEOUS DETAILS

Date: April 15, 2011

C6.8

\\SERVER\Land Projects\9130\ENGINEERING\Construction Documents\Drawings\Permit Submittal\9130-DETAILS.dwg, 7/24/2012 5:54:50 AM, The Saunders Company

LIGHT LEVEL REQUIREMENTS

ROADWAY	CLASSIFICATION		LIGHT LEVEL	UNIFORMITY
SALAMO ROAD	MINOR ARTERIAL	TARGET	0.9 FC AVG	3:1 AVG/MIN
		ACHIEVED	1.13 FC	2.83:1
VISTA RIDGE	LOCAL/RESIDENTIAL	TARGET	0.4 FC AVG	6:1 AVG/MIN
		ACHIEVED	0.41 FC	4.10:1
COEUR D'ALENE	LOCAL/RESIDENTIAL	TARGET	0.4 FC AVG	6:1 AVG/MIN
		ACHIEVED	0.40 FC	4.00:1

LEGEND
- LP1-SHOEBOX LUMINAIRE
- LP2-COBRA LUMINAIRE
- LP3-ACORN LUMINAIRE
- LP4-ACORN LUMINAIRE

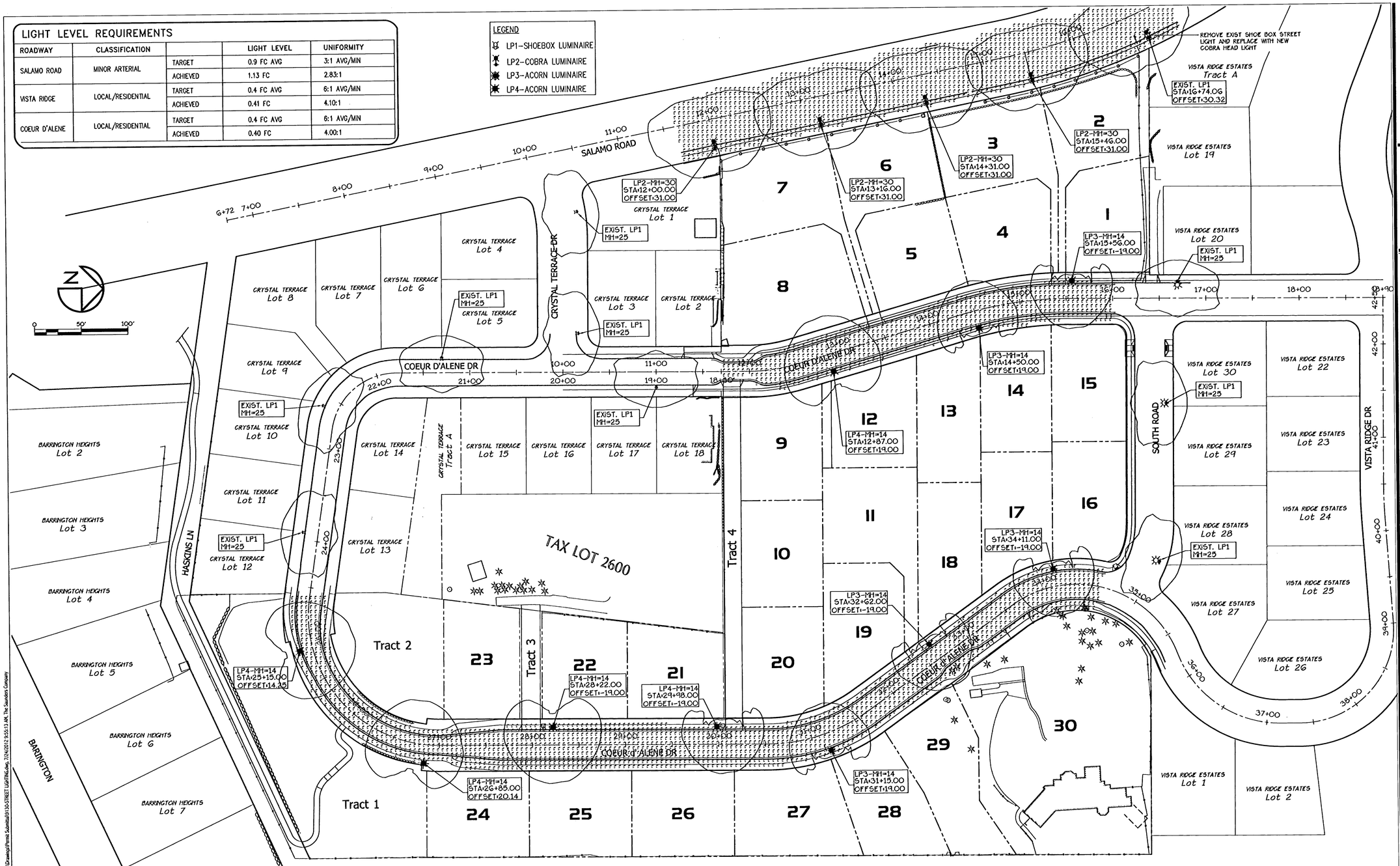

NUMERIC SUMMARY						
PROJECT: TERESA'S VINEYARD						
LABEL	CALC TYPE	UNITS	AVG	MAX	MIN	AVG/MIN
SALAMO ROAD	ILLUMINANCE	FC	1.13	2.5	0.40	2.83
VISTA RIDGE DRIVE	ILLUMINANCE	FC	0.41	1.2	0.10	4.10
COEUR D'ALENE DRIVE	ILLUMINANCE	FC	0.40	1.2	0.10	4.00

LUMINAIRE SCHEDULE							
PROJECT: TERESA'S VINEYARD							
QTY	LABEL	DESCRIPTION	WATTS	LUMENS	ARM	ARRANGEMENT	LLF
9	LP1-EXISTING STREETLIGHT	HPS, 'SHOEBOX' STYLE, FLAT LENS LUMINAIRE MOUNTED ON A 25' FIBERGLASS POLE	100	9500	0.687	SINGLE	0.690
5	LP2-PROPOSED STREETLIGHT	HPS, 'COBRA' STYLE, FLAT LENS LUMINAIRE MOUNTED ON A 30' BRONZE FIBERGLASS POLE	200	22000	6	SINGLE	0.690
5	LP3-PROPOSED STREETLIGHT	HPS, 'ACORN' STYLE, LUMINAIRE MOUNTED ON A 14' BLACK ALUMINUM POLE	100	9500	0	SINGLE	0.690
5	LP4-PROPOSED STREETLIGHT	HPS, 'ACORN' STYLE, LUMINAIRE MOUNTED ON A 14' BLACK ALUMINUM POLE	150	16000	0	SINGLE	0.690

NorthStar ENGINEERING & CONSULTING, INC.

RECORD DRAWINGS
Prepared By: Chuck Gregory Date: 7/31/12
Chuck Gregory, P.E.
THESE RECORD DRAWINGS HAVE BEEN PREPARED, IN PART, ON THE BASIS OF AS-BUILT INFORMATION COMPILED BY THE CONTRACTOR AND PERIODIC OBSERVATIONS DURING CONSTRUCTION. THE INFORMATION CONTAINED IN THESE DRAWINGS ARE TO THE BEST OF MY KNOWLEDGE AN ACCURATE RECORD OF THE CONSTRUCTED PUBLIC IMPROVEMENTS. IT IS RECOMMENDED THAT USERS OF THESE DRAWINGS FIELD VERIFY UTILITY SIZES, LOCATIONS AND ELEVATIONS.

THE SAUNDERS COMPANY
DESIGN GROUP
901 N. Brutscher, Ste. 202
Newberg, Oregon 97132
Phone: 503-537-9347
www.thesaunderscompany.net

J.T. SMITH companies

Teresa's Vineyard
Public Improvements
Sub-07-02/NDW-07-02/VAR-07-01
West linn, Oregon

REV	DATE	SUMMARY
1	8/5/11	Client/Agency Comments
2	8/30/11	Agency Comments
	1/6/12	As Built

Project #: 9130 Drawn:

STREET LIGHTING PLAN

Date: April 15, 2011

EL1.1

\\SERVER\Land Projects\9130\ENGINEERING\Construction Documents\Drawings\Permit Submittal\9130-STREET LIGHTING.dwg, 7/24/2012 9:55:13 AM, The Saunders Company

© 2010 Portland General Electric. All rights reserved.

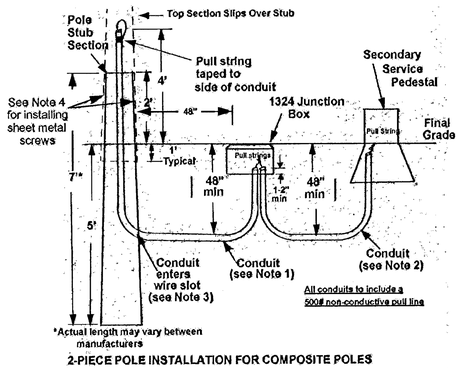

2-PIECE POLE INSTALLATION FOR COMPOSITE POLES

Notes:

1. 1-inch Sch 40 PVC elbows with 24-inch radius if the junction box is less than or equal to 8-feet or less to the pole and 36-inch radius if junction box is greater than 8-feet to the pole.
2. 1-inch Sch 40 PVC with 36-inch radius elbows, if less than 100-feet, 2- or 3-inch Sch 40 PVC with 36-inch radius elbows if 100-feet or more.
3. 1-inch elbow enters the pole stub through the "wire slot" (not through the bottom of the pole stub). 1-inch conduit is to extend 4-feet above final grade with pull string taped to side of conduit.
4. Install 2- #10 x 3/4" sheet metal screws (PGE P/N 02522) 180° apart through pole top and stub to prevent rotation of pole top.
5. Tamped 3/4-minus crushed rock backfill is required around all poles and footing for all soil types.

PGE PROPRIETARY MATERIAL - THIS INFO IS BASED ON ASSUMPTIONS & CRITERIA WHICH MAY NOT BE VALID OUTSIDE THE PGE ELECTRIC SYSTEM - FOR INTERNAL USE ONLY

STREETLIGHT INSTALLATION FOR UG AREAS RESIDENTIAL INSTALLATIONS STREET & AREA LIGHTING	DESIGN	X	CONSTRUCTION
	T & D		STANDARDS
	DATE	10-29-10	
P.G.E. CO. STANDARD	LC-115-80-05		

© 2004 Portland General Electric. All Rights Reserved.

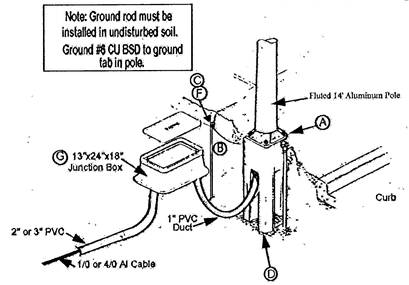

Item	PGE P/N	DESCRIPTON	QUANTITY
A	00148	Streetlight Shims	As needed
B	03451	5/8"x 8' Galvanized Ground Rod	1
C	03008	5/8" Ground Rod Clamp	1
D	39083	Precast Concrete Footing (11" B.C.)	1
E	00038	#10 Cu TC 3-Conductor Streetlight Cable	As needed
F	01868	#6 Solid SD CU Wire	6-8 feet
G	01419	13"x24"x18" Deep Junction Box	1

NOTES:

1. Locate pole 24" from face of curb to face of pole to avoid damage to pole by vehicles.
2. Set footing with flat side parallel to curb and backfill with tamped dirt or crushed rock if poor soil conditions exist.
3. Metal pole shall be grounded by using a galvanized 8' ground rod per NESC 215C.
4. Customer to provide a minimum of 18" tails of #10 Cu TC 3-conductor cable into junction box.

PGE PROPRIETARY MATERIAL - THIS INFO IS BASED ON ASSUMPTIONS & CRITERIA WHICH MAY NOT BE VALID OUTSIDE THE PGE ELECTRIC SYSTEM - FOR INTERNAL USE ONLY

STREETLIGHT INSTALLATIONS FOR UG AREAS ALUMINUM POLES & CONDUIT SYSTEM STREET & AREA LIGHTING	DESIGN	X	CONSTRUCTION
	T & D		STANDARDS
	DATE	10-07-04	
P.G.E. CO. STANDARD	LC-115-75-10		

© 2004 Portland General Electric. All rights reserved.

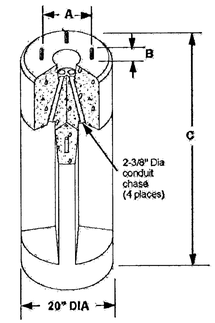

Maximum working moment for this footing is 4,255 lb-ft.

Utility Vault 20R-LB-4-PGE

PGE P/N	BOLT CIRCLE (A)	BOLT PROJECTION (B)	BOLT TYPE	C DIMENSION	WEIGHT
39083	11" Dia	3-1/2"	1"-8 NC Galv Steel	48"	870 lb

PGE PROPRIETARY MATERIAL - THIS INFO IS BASED ON ASSUMPTIONS & CRITERIA WHICH MAY NOT BE VALID OUTSIDE THE PGE ELECTRIC SYSTEM - FOR INTERNAL USE ONLY

PRECAST CONCETE FOOTING STREET & AREA LIGHTING	DESIGN	X	CONSTRUCTION
	T & D		STANDARDS
	DATE	10-08-04	
P.G.E. CO. STANDARD	LC-115-40-04		

NorthStar ENGINEERING & SURVEYING, LLC

RECORD DRAWINGS
Prepared By: Chuck Gregory, P.E. Date: 7/4/12
THESE RECORD DRAWINGS HAVE BEEN PREPARED, IN PART, ON THE BASIS OF AS-BUILT INFORMATION COMPILED BY THE CONTRACTOR AND PERIODIC OBSERVATIONS DURING CONSTRUCTION. THE INFORMATION CONTAINED IN THESE DRAWINGS ARE TO THE BEST OF MY KNOWLEDGE AN ACCURATE RECORD OF THE CONSTRUCTED PUBLIC IMPROVEMENTS. IT IS RECOMMENDED THAT USERS OF THESE DRAWINGS FIELD VERIFY UTILITY SIZES, LOCATIONS AND ELEVATIONS.

THE SAUNDERS COMPANY
DESIGN GROUP
901 N. Brutscher, Ste. 202
Newberg, Oregon 97132
Phone: 503-537-9347
www.thesaunderscompany.net

J.T. SMITH companies

Teresa's Vineyard
Public Improvements
Sub-07-02/NDW-07-02/VAR-07-01
West linn, Oregon

REV	DATE	SUMMARY

Project #: 9130 Drawn:

STREET LIGHTING INSTALLATION DETAILS

Date: April 15, 2011

EL1.2

\\SERVER\Land Projects\9130\ENGINEERING\Construction Documents\Drawings\Permit Submittal\9130-STREET LIGHTING.dwg, 7/24/2012 9:55:24 AM, The Saunders Company