SITE INDEX

SHEET NO.	DESCRIPTION
1.	OFF SITE IMPROVEMENTS
2.	STREET AND UTILITY PLAN
3.	STREET PROFILES
4.	STORM AND SANITARY SEWER PROFILES
5.	TYPICAL DETAILS
6.	TYPICAL DETAILS

SCALE: 1"=50'

VICINITY MAP

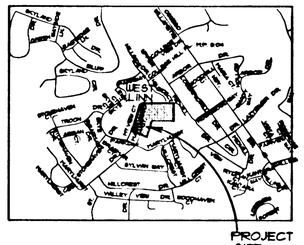

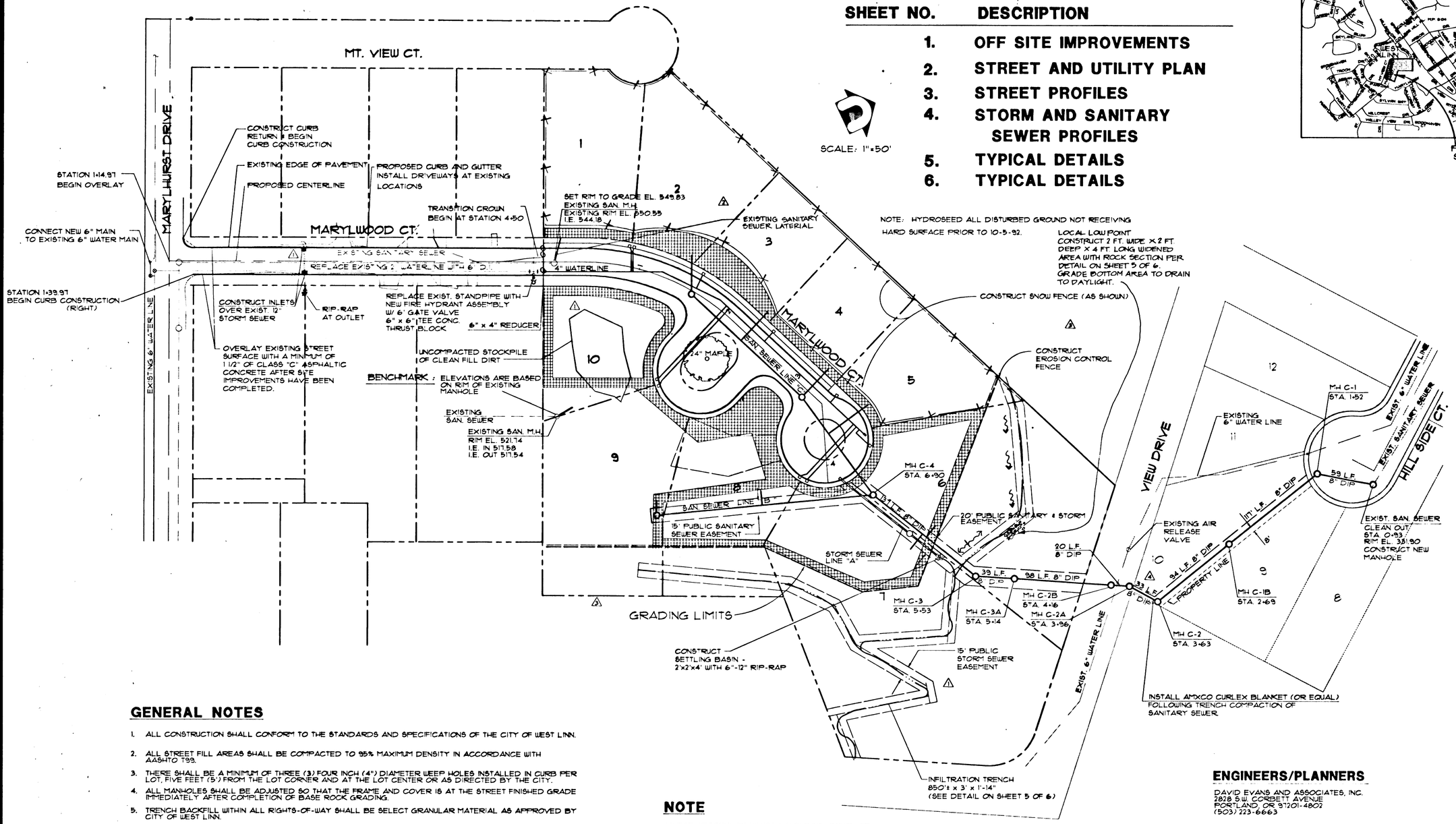

GENERAL NOTES

1. ALL CONSTRUCTION SHALL CONFORM TO THE STANDARDS AND SPECIFICATIONS OF THE CITY OF WEST LINN.
2. ALL STREET FILL AREAS SHALL BE COMPACTED TO 95% MAXIMUM DENSITY IN ACCORDANCE WITH AASHTO T99.
3. THERE SHALL BE A MINIMUM OF THREE (3) FOUR INCH (4") DIAMETER WEEP HOLES INSTALLED IN CURB PER LOT, FIVE FEET (5') FROM THE LOT CORNER AND AT THE LOT CENTER OR AS DIRECTED BY THE CITY.
4. ALL MANHOLES SHALL BE ADJUSTED SO THAT THE FRAME AND COVER IS AT THE STREET FINISHED GRADE IMMEDIATELY AFTER COMPLETION OF BASE ROCK GRADING.
5. TRENCH BACKFILL WITHIN ALL RIGHTS-OF-WAY SHALL BE SELECT GRANULAR MATERIAL AS APPROVED BY CITY OF WEST LINN.
6. THE CONTRACTOR, SUBCONTRACTORS, AND EXCAVATORS MUST COMPLY WITH ALL PROVISIONS OF O.R.S. 757.541 TO 757.571, INCLUDING NOTIFICATION OF ALL OWNERS OF UNDERGROUND FACILITIES AT LEAST FORTY-EIGHT (48) BUSINESS DAY HOURS BUT NOT MORE THAN TEN (10) BUSINESS DAYS BEFORE BEGINNING WORK.
7. THE LOCATION OF THE UNDERGROUND FACILITIES SHOWN HEREIN ARE APPROXIMATE. LOCATIONS ARE BASED SOLELY ON THE SURFACE EVIDENCE INDICATED. THE ENGINEER ACCEPTS NO RESPONSIBILITY FOR THE ACCURACY OF THE LOCATIONS SHOWN. IT SHALL BE THE CONTRACTOR'S RESPONSIBILITY TO VERIFY THE LOCATIONS OF ALL UTILITIES THAT MAY CONFLICT WITH HIS WORK, PRIOR TO ANY CONSTRUCTION WORK.

NOTE

"THESE RECORD DRAWINGS HAVE BEEN COMPILED FROM DATA OBTAINED FROM THE CONSTRUCTION DESIGN DRAWINGS, SUBSEQUENT ADDENDA AND CHANGE ORDERS, SURVEY RECORDS, CONTRACTOR RECORD DRAWINGS SUBMITTALS, AND OTHER RECORD DRAWINGS. TO THE BEST OF OUR KNOWLEDGE AND BELIEF, THESE DRAWINGS ARE REPRESENTATIVE OF THE PROJECT AS CONSTRUCTED."

ENGINEERS/PLANNERS

DAVID EVANS AND ASSOCIATES, INC.
2828 S.W. CORBETT AVENUE
PORTLAND, OR 97201-4802
(503) 223-6663

TOTAL AREA

6.007 ACRES

LEGAL DESCRIPTION

IN THE SOUTHWEST ONE - QUARTER OF SECTION 14 N, TOWNSHIP 2 SOUTH, AND RANGE 1 EAST, OF THE WILLAMETTE MERIDIAN.

AS - BUILT 3-17-93

CENTURION HOMES, INC.
SKYLINE TERRACE
WEST LINN, OREGON
OFF SITE UTILITIES

REGISTERED PROFESSIONAL ENGINEER 14596 OREGON SEPT. 20, 1983 AL A. BARNHOUL 10-14-92

DAVID EVANS AND ASSOCIATES, INC.
ENGINEERS, SURVEYORS, PLANNERS, LANDSCAPE ARCHITECTS
2828 S.W. CORBETT AVENUE PORTLAND, OR 97201 (503)223-6663

△1 REVISED PER CITY OF WEST LINN 8-11-92
△2 REVISED 8-24-92
△3 FINAL CITY REVISIONS 8-28-92
△4 REVISED 10-14-92
△5 RECORD DRAWING 12-22-92
REVISIONS
△6 REVISED RECORD DRAWING 3-17-93

1 OF 6 SHEETS

SCALE: 1" = 50' DESIGN: RCP
DATE: 7-1-92 DRAWN: LMB
FILE: CHKCOORD CHECKED:

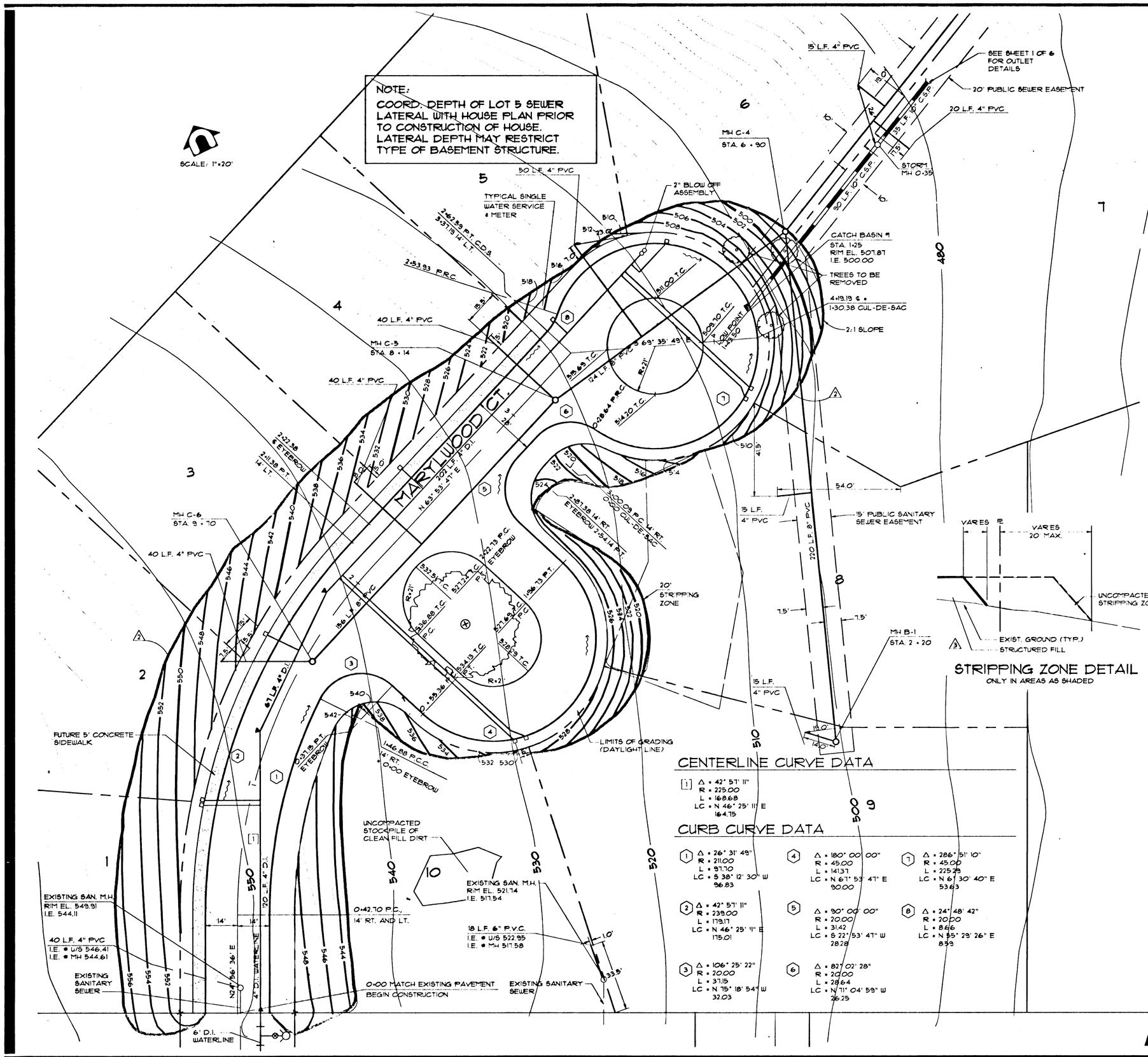

STRIPPING ZONE DETAIL

ONLY IN AREAS AS SHADED

CENTERLINE CURVE DATA

[1] Δ = 42° 57' 11"
R = 225.00
L = 168.68
LC = N 46° 25' 11" E
164.75

CURB CURVE DATA

(1) Δ = 26° 31' 49"
R = 211.00
L = 97.70
LC = S 38° 12' 30" W
96.83

(2) Δ = 42° 57' 11"
R = 239.00
L = 179.17
LC = N 46° 25' 11" E
175.01

(3) Δ = 106° 25' 22"
R = 20.00
L = 37.15
LC = N 75° 18' 54" W
32.03

(4) Δ = 180° 00' 00"
R = 45.00
L = 141.37
LC = N 67° 53' 47" E
90.00

(5) Δ = 90° 00' 00"
R = 20.00
L = 31.42
LC = S 22° 53' 47" W
28.28

(6) Δ = 82° 02' 28"
R = 20.00
L = 28.64
LC = N 71° 04' 59" W
26.25

(7) Δ = 286° 51' 10"
R = 45.00
L = 225.29
LC = N 61° 30' 40" E
53.83

(8) Δ = 24° 48' 42"
R = 20.00
L = 8.66
LC = N 85° 29' 26" E
8.59

AS-BUILT

SANITARY SEWER LATERALS

LOT No.	STATION	LENGTH	I.E. @ MAIN	LATERAL UPSTREAM I.E.	DEPTH TO I.E. IN FT.
SANITARY SEWER LINE "C"					
7	6 + 23	21	477.61	477.13	4'
6	6 + 18	16	476.55	479.89	3'
5	7 + 68	50	501.72	506.77	6.5'
4	8 + 14	40	509.56	514.29	6'
3	9 + 00	40	523.41	526.89	6'
2	9 + 70	40	534.70	539.73	6'
SANITARY SEWER LINE "B"						
9	2 + 20	14	497.35	501.75	2.5'
8	1 + 15	13	493.45	498.37	4.5'

SANITARY SEWER AND WATER NOTES

SANITARY SEWER NOTES

1. ALL MATERIALS, INSTALLATION, TESTS AND INSPECTIONS SHALL BE IN ACCORDANCE WITH CITY OF WEST LINN STANDARDS AND SPECIFICATIONS.
2. GRANULAR BACKFILL WITHIN TWO FEET OF FINISHED GRADE SHALL BE COMPACTED TO NOT LESS THAN 95% RELATIVE COMPACTION AS DETERMINED BY METHOD "A" OF AASHTO T99. BACKFILL MORE THAN TWO FEET FROM FINISHED GRADE SHALL BE COMPACTED TO NOT LESS THAN 90% RELATIVE COMPACTION.
3. SANITARY SEWER PIPE SHALL BE SUBJECTED TO AIR TESTING AND DEFLECTION TESTING ACCORDING TO CITY OF WEST LINN SPECIFICATIONS.
4. MINIMUM SLOPE FOR SERVICE LATERALS SHALL BE 2%.
5. ALL SANITARY SEWER BURIED GREATER THAN 12 FEET SHALL BE CONCRETE. CONCRETE SANITARY SEWER PIPE SHALL BE NON-REINFORCED CONCRETE PIPE ASTM C14, CLASS 3 OR POLYVINYL CHLORIDE PIPE (PVC) TYPE ASTM 3034 SDR 35.
6. CONCRETE SANITARY SEWER PIPE SHALL BE NON-REINFORCED CONCRETE PIPE ASTM C14, CLASS 2 OR POLYVINYL CHLORIDE PIPE (PVC) TYPE:
   a. ASTM 3034 SDR 35 DIA. 4-15"
   b. ASTM F-679 SDR 35 DIA. 18-24"
   c. ASTM C-900: O-1784 DR 18 DIA. 4-12"

WATER LINE NOTES

1. ALL MATERIALS, INSTALLATION, TESTS AND INSPECTIONS SHALL BE IN ACCORDANCE WITH CITY OF WEST LINN STANDARDS AND SPECIFICATIONS.
2. CITY FORCES WILL TEST AND MAKE CONNECTIONS TO EXISTING WATER LINES. DEVELOPER WILL FURNISH AND INSERT CHLORINE TO DISINFECT LINES.
3. ALL PIPE SHALL BE TYTON JOINT DUCTILE IRON PIPE, CLASS 52. ALL FITTINGS SHALL BE MECHANICAL JOINT UNLESS OTHERWISE NOTED.
4. ALL TRENCH BACKFILL IN ROADWAYS SHALL BE GRANULAR PLACED IN 8-INCH LIFTS AND COMPACTED TO 95% RELATIVE RELATIVE MAXIMUM DENSITY AS DETERMINED BY ASTM D2049, METHOD D.
5. MINIMUM DISTANCE BETWEEN WATERLINES AND SANITARY SEWER LINES CROSSINGS SHALL BE 18 INCHES VERTICAL. THIRTY-SIX INCH (36") MINIMUM COVER OVER WATER LINES.
6. HYDRANTS SHALL CONFORM TO AWWA C502 AND THE SPECIFICATIONS OF CITY OF WEST LINN.
7. WATER SERVICE LATERALS SHALL BE 1 INCH FOR SINGLE AND 1 1/2" FOR DOUBLE SERVICE, COPPER PIPE, AND SHALL CONFORM TO ASTM B88.

AS - BUILT 3-17-93

CENTURION HOMES, INC.
SKYLINE TERRACE
WEST LINN, OREGON
STREET AND UTILITY PLAN

REGISTERED PROFESSIONAL ENGINEER — OREGON — SEPT. 20, 1982 — ALAN A. BARKER — 10-14-92

DAVID EVANS AND ASSOCIATES, INC.
ENGINEERS, SURVEYORS, PLANNERS, LANDSCAPE ARCHITECTS
2828 S.W. CORBETT AVENUE PORTLAND, OR 97201 (503)223-6663

REVISIONS
1 REVISED 8-24-92
2 FINAL CITY REVISIONS 8-28-92
3 RECORD DWG. 12-22-92
4 REVISED RECORD DRAWING 3-17-93

SHEET 2 OF 6 SHEETS
SCALE: 1" = 20'
DESIGN: RDP
DATE: 7-7-92
DRAWN: LPB, WDR, GCB
FILE: CHXDOOR
CHECKED:

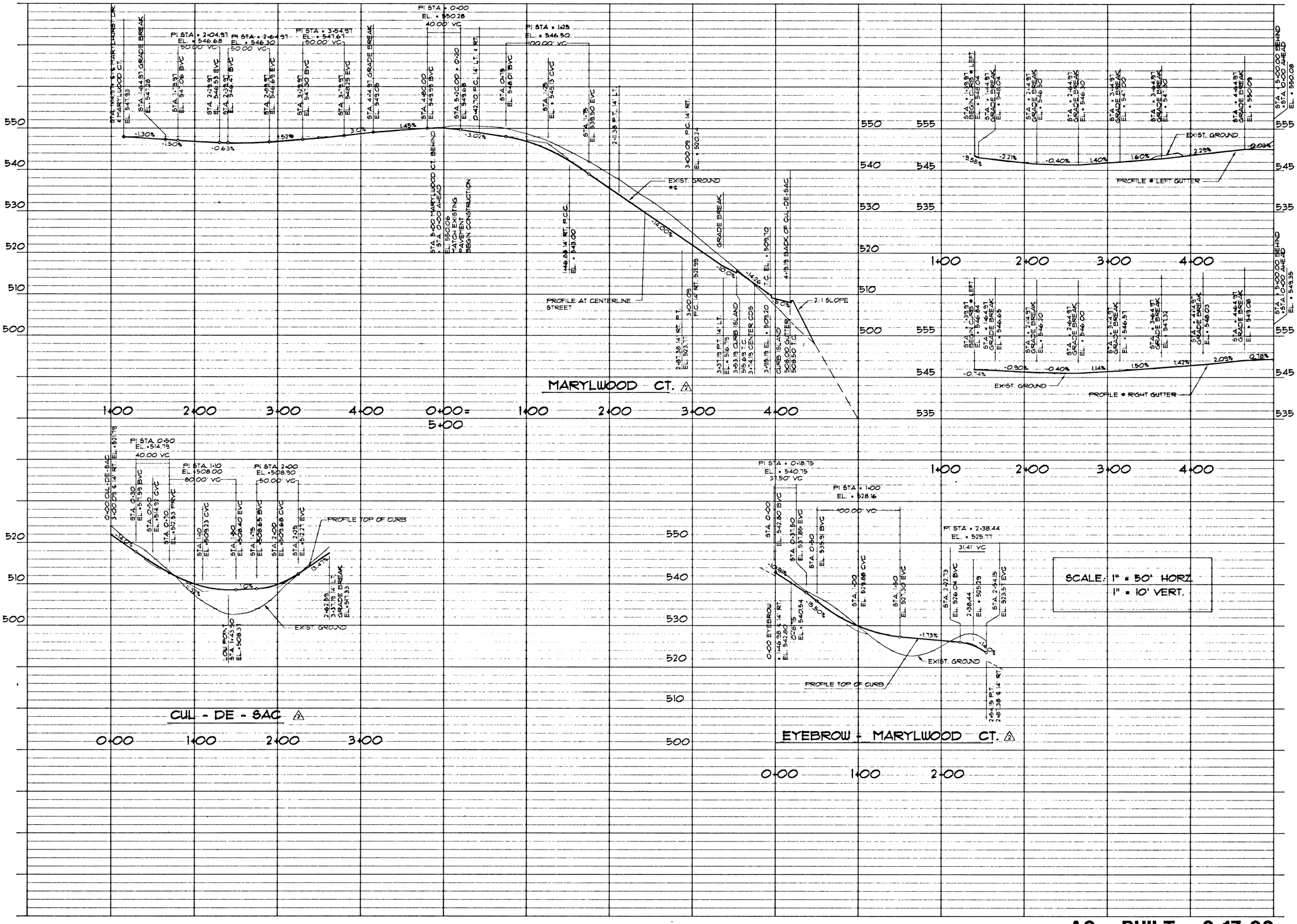

AS - BUILT 3-17-93

CENTURION HOMES, INC.
SKYLINE TERRACE
WEST LINN, OREGON
STREET PROFILES

REGISTERED PROFESSIONAL ENGINEER 14596 OREGON SEPT. 20, 1989 AL A. BARKOULI 10-14-92 7/21/93

DAVID EVANS AND ASSOCIATES, INC.
ENGINEERS, SURVEYORS, PLANNERS, LANDSCAPE ARCHITECTS
2828 S.W. CORBETT AVENUE PORTLAND, OR 97201 (503)223-6663

2	REVISED 8-24-92
3	RECORD DWG. 3-17-93

REVISIONS

SCALE: 1" = 50' 1" = 10' VERT. DESIGN: RDP
DATE: 7-7-92 DRAWN: LMB
FILE: CHIX0008 CHECKED:

3 OF 6 SHEETS

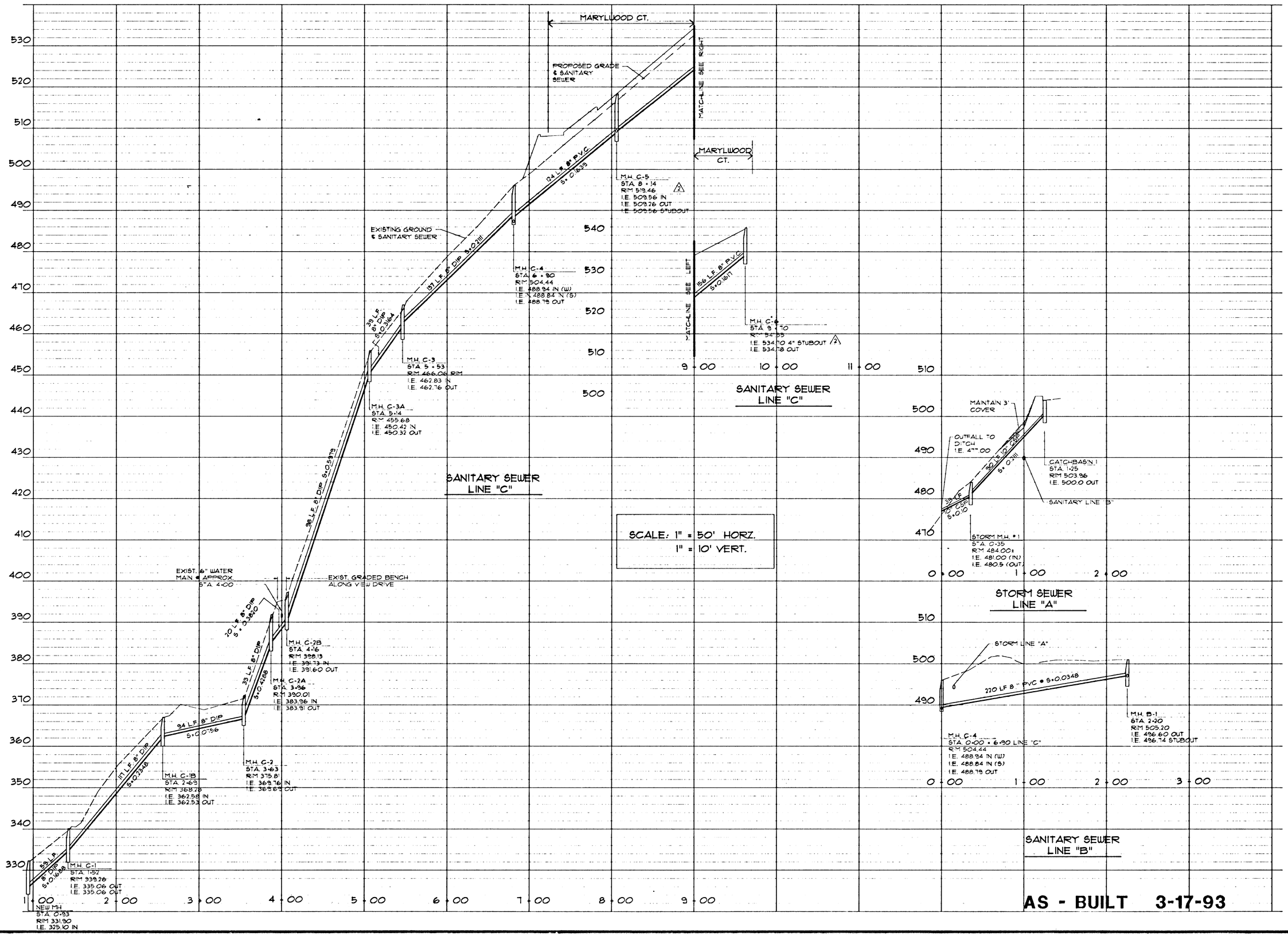

AS - BUILT 3-17-93

CENTURION HOMES, INC.
SKYLINE TERRACE
WEST LINN OREGON

STORM AND SANITARY PROFILES

REGISTERED PROFESSIONAL ENGINEER 14596 OREGON SEPT. 20, 1989 AL A. BARKOULI 10-14-92

DAVID EVANS AND ASSOCIATES, INC.
ENGINEERS, SURVEYORS, PLANNERS, LANDSCAPE ARCHITECTS
2828 S.W. CORBETT AVENUE PORTLAND, OR 97201 (503)223-6663

2	REVISED 8-24-92
4	REVISED 10-14-92
5	RECORD DWG. 12-22-92
6	REVISED RECORD DRAWING 3-17-93

REVISIONS

4 OF 6 SHEETS

SCALE: 1"=50' HORIZ. 1"=10' VERT.
DESIGN: BOB
DATE: 7-7-92
DRAWN: LMB
FILE: CHIXOOOB
CHECKED:

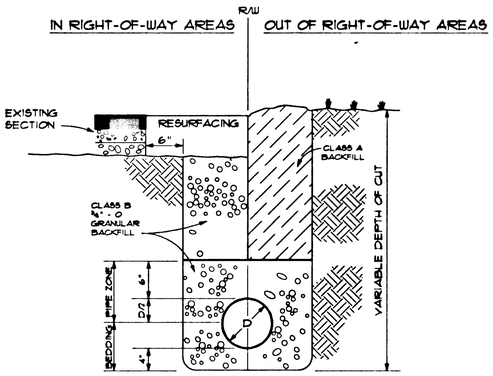

PIPE BEDDING AND BACKFILL DETAILS

CITY OF WEST LINN DWG No. PB-280
NOT TO SCALE

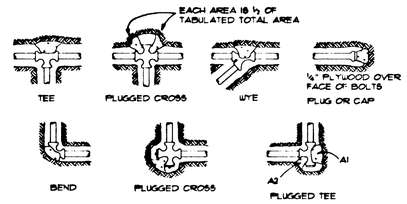

NOTES:

1. CONCRETE THRUST BLOCKING TO BE POURED AGAINST UNDISTURBED EARTH.
2. KEEP CONCRETE CLEAR OF JOINT AND ACCESSORIES.
3. THE REQUIRED THRUST BEARING AREAS FOR SPECIAL CONNECTIONS ARE SHOWN ENCIRCLED ON THE PLANS, e.g. (15) INDICATES 15 SQUARE FEET BEARING AREA REQUIRED.
4. IF NOT SHOWN ON PLANS REQUIRED BEARING AREAS AT FITTING SHALL BE AS INDICATED BELOW, ADJUSTED IF NECESSARY, TO CONFORM TO THE TEST PRESSURE(S) AND ALLOWABLE SOIL BEARING STRESS(ES) STATED IN THE SPECIAL SPECIFICATIONS.
5. BEARING AREAS AND SPECIAL BLOCKING DETAILS SHOWN ON PLANS TAKE PRECEDENCE OVER BEARING AREAS AND BLOCKING DETAILS SHOWN ON THIS STANDARD DETAIL.

BEARING AREA OF THRUST BLOCKS IN SQ. FT.

FITTING SIZE	TEE, WYE, PLUG, OR CAP	90° BEND PLUGGED CROSS	TEE PLUGGED ON RUN		45° BEND	22½° BEND	11¼° BEND
			A1	A1			
4	1.0	1.4	1.9	1.4	1.0	--	--
6	2.1	3.0	4.3	3.0	1.6	1.0	--
8	3.8	5.3	7.6	5.4	2.9	1.5	1.0
10	5.9	8.4	11.8	8.4	4.6	2.4	1.2
12	8.5	12.0	17.0	12.0	6.6	3.4	1.7
14	11.5	16.3	23.0	16.3	8.9	4.6	2.3
16	15.0	21.3	30.0	21.3	11.6	6.0	3.0
18	19.0	27.0	38.0	27.0	14.6	7.6	3.8
20	23.5	33.3	47.0	33.3	18.1	9.4	4.7
24	34.0	48.0	68.0	48.0	26.2	13.6	6.8

NOTE:
ABOVE BEARING AREAS BASED ON TEST PRESSURE OF 150 P.S.I. AND AN ALLOWABLE SOIL BEARING STRESS OF 2,000 POUNDS PER SQUARE FOOT. TO COMPUTE BEARING AREAS FOR DIFFERENT TEST PRESSURES AND SOIL BEARING STRESSES, USE THE FOLLOWING EQUATION: BEARING AREA = (TEST PRESSURE/150) X (2000/SOIL BEARING STRESS) X (TABLE VALUE).

THRUST BLOCKING DETAILS

NOT TO SCALE

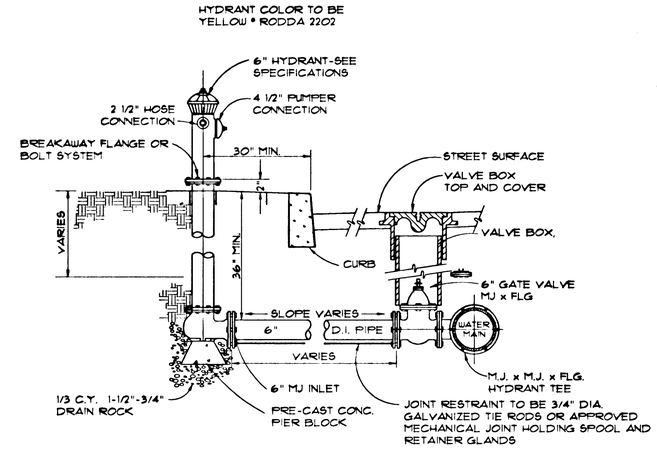

FIRE HYDRANT INSTALLATION

CITY OF WEST LINN DWG No. FH-300
NOT TO SCALE

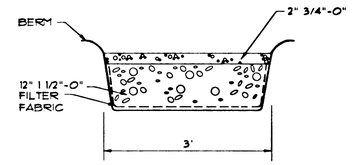

INFILTRATION TRENCH

NOT TO SCALE

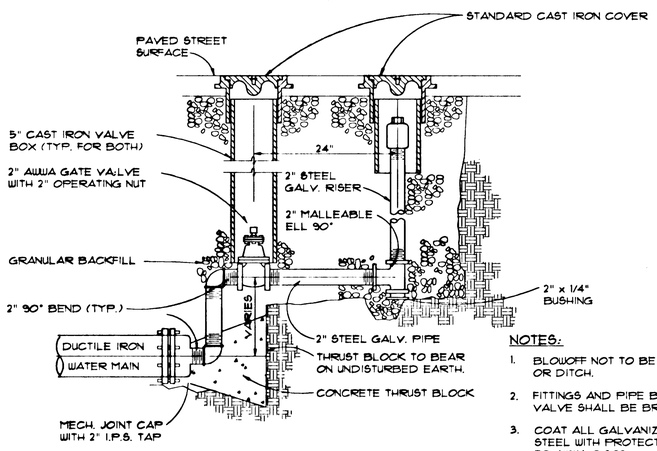

NOTES:

1. BLOWOFF NOT TO BE LOCATED IN GUTTER OR DITCH.
2. FITTINGS AND PIPE BETWEEN MAIN & 2" GATE VALVE SHALL BE BRASS.
3. COAT ALL GALVANIZED PIPE EXPOSED STEEL WITH PROTECTIVE COATING CONFORMING TO AWWA C 203.
4. RESTRAIN MECHANICAL JOINT PLUG TO PIPE.
5. THIS STANDARD APPLICABLE FOR PIPE SIZES THRU 8".

2" BLOWOFF ASSEMBLY IN PAVED STREET

CITY OF WEST LINN STD. PLAN No. 5-102
NOT TO SCALE

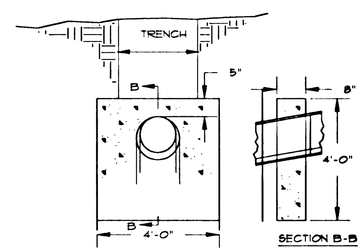

FOR 12" AND 15" SEWER PIPE
0.37 CU. YD. CONCRETE EACH

NOTES:

1. ALL CONCRETE TO BE 3,000 LBS., 2" TO 4" SLUMP.
2. ANCHOR WALLS TO BE EQUALLY SPACED WITH MAXIMUM DISTANCE BETWEEN WALLS TO BE 21 FT. ON SLOPE MEASURE.
3. PLACE WALL IMMEDIATELY BELOW BELL OF PIPE WHERE POSSIBLE.
4. BACKFILL BEHIND HEADWALL WITH SELECT IMPERVIOUS MATERIALS.

ANCHOR WALL DETAIL

NOT TO SCALE

CATCH BASIN

AS - BUILT 3-17-93

CENTURION HOMES, INC.
SKYLINE TERRACE
WEST LINN, OREGON
TYPICAL DETAILS

REGISTERED PROFESSIONAL ENGINEER 14608 OREGON SEPT. 20 ALAN BARNHOULT 3/16/93

DAVID EVANS AND ASSOCIATES, INC.
ENGINEERS, SURVEYORS, PLANNERS, LANDSCAPE ARCHITECTS
2828 S.W. CORBETT AVENUE PORTLAND, OR 97201 (503)223-6663

△1 RECORD DWG. 3-17-93

REVISIONS

SHEET 5 OF 6 SHEETS

SCALE: 1" = 20'
DESIGN: RDP
DATE: 7-1-92
DRAWN: JKL
FILE: C4D0CD09
CHECKED:

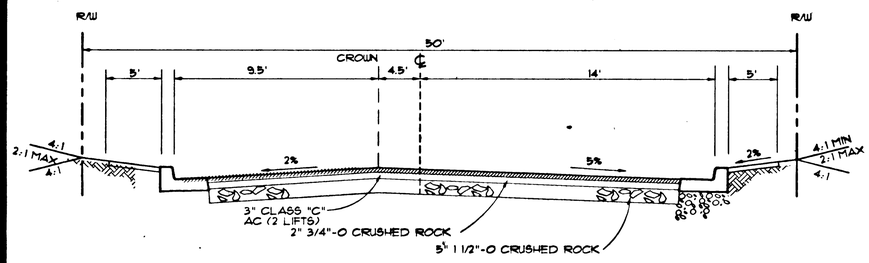

MARYLWOOD CT.
ON-SITE

TYPICAL STREET SECTION

NOT TO SCALE

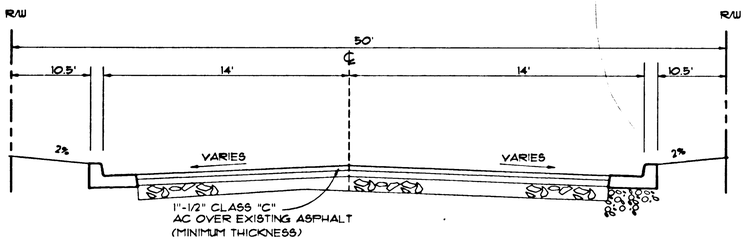

MARYLWOOD CT.
OFF-SITE

TYPICAL STREET SECTION

NOT TO SCALE

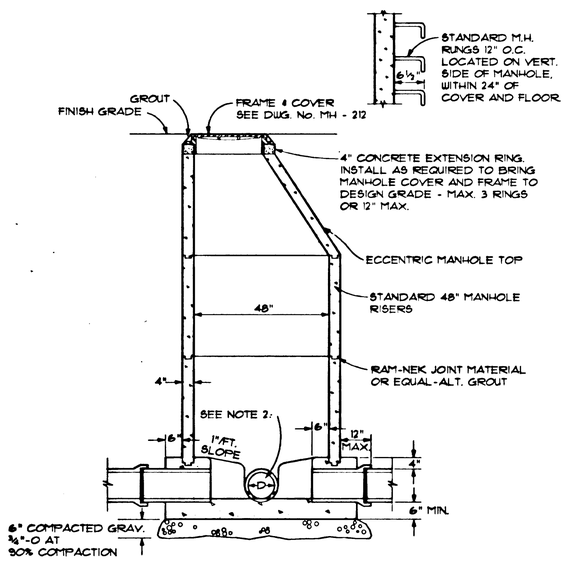

NOTES:

1. POURED CONCRETE BASE - 5 SACK MIX, 2500 P.S.I. AT 28 DAYS.
2. SANITARY - 8" TO 24" STORM - 12" TO 24"

STANDARD MANHOLE

CITY OF WEST LINN M.H. - 203

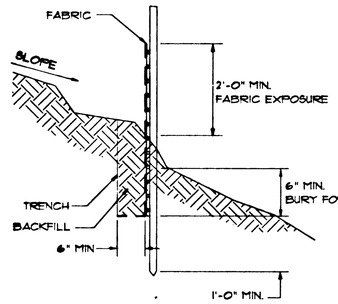

SECTION B-B

NOTES:

1. INSTALLATION SHALL FOLLOW THE MANUFACTURERS RECOMMENDATIONS.
2. POSTS SHALL BE INSTALLED SO THAT A MIN. OF 3'-0" EXTENDS ABOVE THE GROUND WITH A MIN. OF 2'-0" EMBEDMENT.
3. FILTER FABRIC SHALL BE PURCHASED IN A CONTINUOUS ROLL TO AVOID JOINTS.
4. SPLICE JOINTS AT SUPPORT POSTS ONLY, WITH A MIN. 6" OVERLAP.

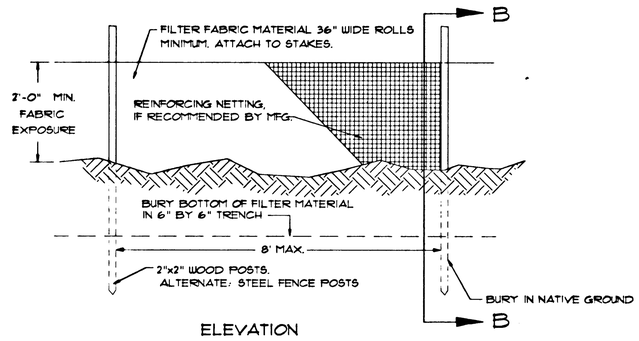

ELEVATION

SEDIMENT FENCE DETAIL

NOT TO SCALE

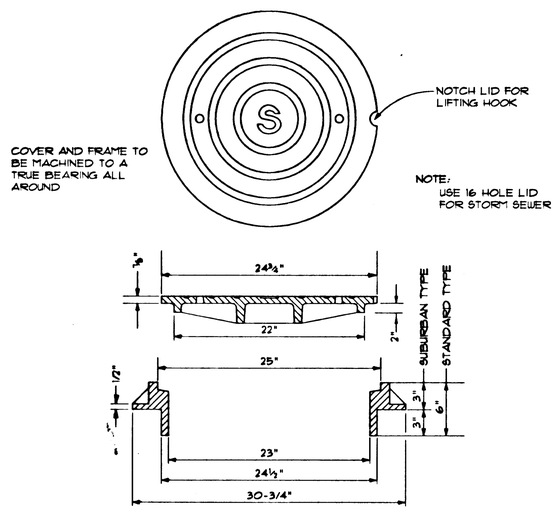

NOTES:

1. HEAVY DUTY MANHOLE FRAMES AND COVERS ARE TO BE USED ON ALL MANHOLES UNLESS OTHERWISE APPROVED BUY THE CITY ENGINEER.
2. SOLID LIDS MAY BE REQUIRED IN CERTAIN CASES.

STANDARD MANHOLE FRAME & COVER

CITY OF WEST LINN DRAWING No. MH-212
NOT TO SCALE

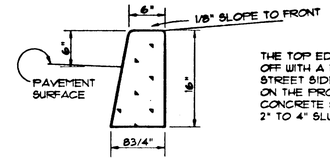

THE TOP EDGE TO BE ROUNDED OFF WITH A 1" RADIUS ON THE STREET SIDE AND A 1/4" RADIUS ON THE PROPERTY SIDE. CONCRETE SHALL BE 3000 P.S.I. 2" TO 4" SLUMP.

CONCRETE CURB FOR CUL-DE-SAC AND EYEBROW ISLANDS

NOT TO SCALE

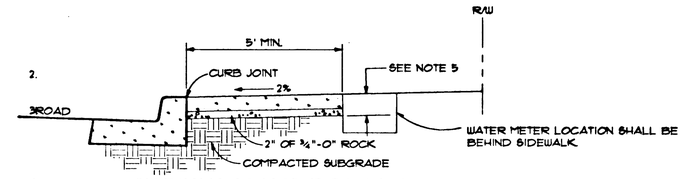

4.

SIDEWALK ADJACENT TO CURB

5.

NOTES:

1. CONCRETE SHALL BE 3000 P.S.I. AT 28 DAYS, 6 SACK MIX, SLUMP RANGE
6. OF 1 1/2" TO 3".

PANEL LENGTHS SHALL BE EQUAL TO THE SIDEWALK WIDTH, BUT MAY BE ADJUSTED WITH THE CITY ENGINEERS APPROVAL.

7. CONTRACTION JOINTS (1 1/2" DEEP) SHALL BE PLACED EVERY THIRD PANEL, WITH A MAX. SPACING OF 15 FEET.

JOINTS SHALL ALSO BE PLACED AT THE SIDES OF DRIVEWAY APPROACHES, UTILITY VAULTS, AND WHEELCHAIR RAMPS.

A CURING COMPOUND SHALL BE USED. WHITE REFLECTIVE SHEETING SHALL BE USED IN CASE OF RAIN.

FOR SIDEWALKS ADJACENT TO THE CURB & POURED AT THE SAME TIME AS THE CURB, THE JOINT BETWEEN THEN SHALL BE A TROWELED JOINT WITH A MIN. 1/2" RADIUS.

THE SIDEWALK SHALL HAVE A MIN. THICKNESS OF 6" IF MOUNTABLE CURB IS USED OR IF THE SIDEWALK IS INTENDED AS A PORTION OF THE DRIVEWAY OTHERWISE, THE SIDEWALK SHALL HAVE A MIN. THICKNESS OF 4".

DRAIN BLOCKOUTS IN THE CURB SHALL BE EXTENDED TO THE BACK OF THE SIDEWALK WITH A 3" DIA. PLASTIC PIPE AT A 2% SLOPE.
A CONTRACTION JOINT SHALL BE PLACED OVER THE PIPE.

CONCRETE SIDEWALK

CITY OF WEST LINN STANDARD DGW No. CS-270
NOT TO SCALE

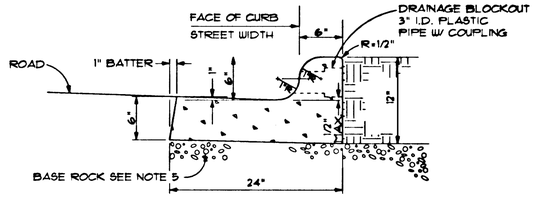

NOTES:

1. WHEN USED ALONG MEDIANS, GUTTERS MAY BE REDUCED WITH PRIOR APPROVAL FROM THE CITY ENGINEER.
2. CONCRETE TO HAVE BREAKING STRENGTH OF 3000 P.S.I. AFTER 28 DAYS.
3. CONTRACTION JOINTS
   A. TO BE PROVIDED:
      1.) AT EACH POINT OF TANGENCY OF THE CURB.
      2.) AT EACH COLD JOINT.
      3.) AT EACH SIDE OF INLET STRUCTURES.
      4.) AT BOTH SIDES OF AN APPROACH.
   B. SPACING TO BE NO MORE THAN 15 FEET.
   C. THE DEPTH OF THE JOINT SHALL BE AT LEAST 1 1/2".
4. BASE ROCK - 1 1/2" MINUS, 95% COMPACTION ROCK SHALL BE TO SUBGRADE OF STREET STRUCTURE OF 4" IN DEPTH, WHICHEVER IS GREATER.
5. DRAINAGE BLOCK - 3" DIA. PLASTIC PIPE
   A. DRAINAGE ACCESS THROUGH EXISTING CURBS SHALL
      1.) CORE DRILLING
      2.) VERTICAL SAW-CUT OF CURB 18" EACH SIDE OF DRAIN & REPOURED TO FULL DEPTH OF CURB.
6. DRAINAGE BLOCKOUT - 3" DIAMETER PLASTIC PIPE
   A. I.D. PLASTIC PIPE WITH COUPLING
   B. DRAINAGE ACCESS THROUGH EXISTING CURBS SHALL BE CORE DRILLED OR CURB SAW CUT VERTICALLY 18" EACH SIDE OF DRAIN AND REPOURED TO FULL DEDPTH OF CURB.

CURB AND GUTTER

CITY OF WEST LINN DWG. NO. CG-265
NOT TO SCALE

AS - BUILT 3-17-93

CENTURION HOMES, INC.
SKYLINE TERRACE
WEST LINN, OREGON
TYPICAL DETAILS

REGISTERED PROFESSIONAL ENGINEER
OREGON
AL A. BARNHOUSE
9/21/92

DAVID EVANS AND ASSOCIATES, INC.
ENGINEERS, SURVEYORS, PLANNERS, LANDSCAPE ARCHITECTS
2828 S.W. CORBETT AVENUE, PORTLAND, OR 97201 (503)223-6663

△ RECORD DWG. 3-17-93

REVISIONS

SHEETS 6 OF 6

SCALE: NTS
DESIGN: RDP
DATE: 7-1-92
DRAWN: JBJ
FILE: CH0C0009
CHECKED: