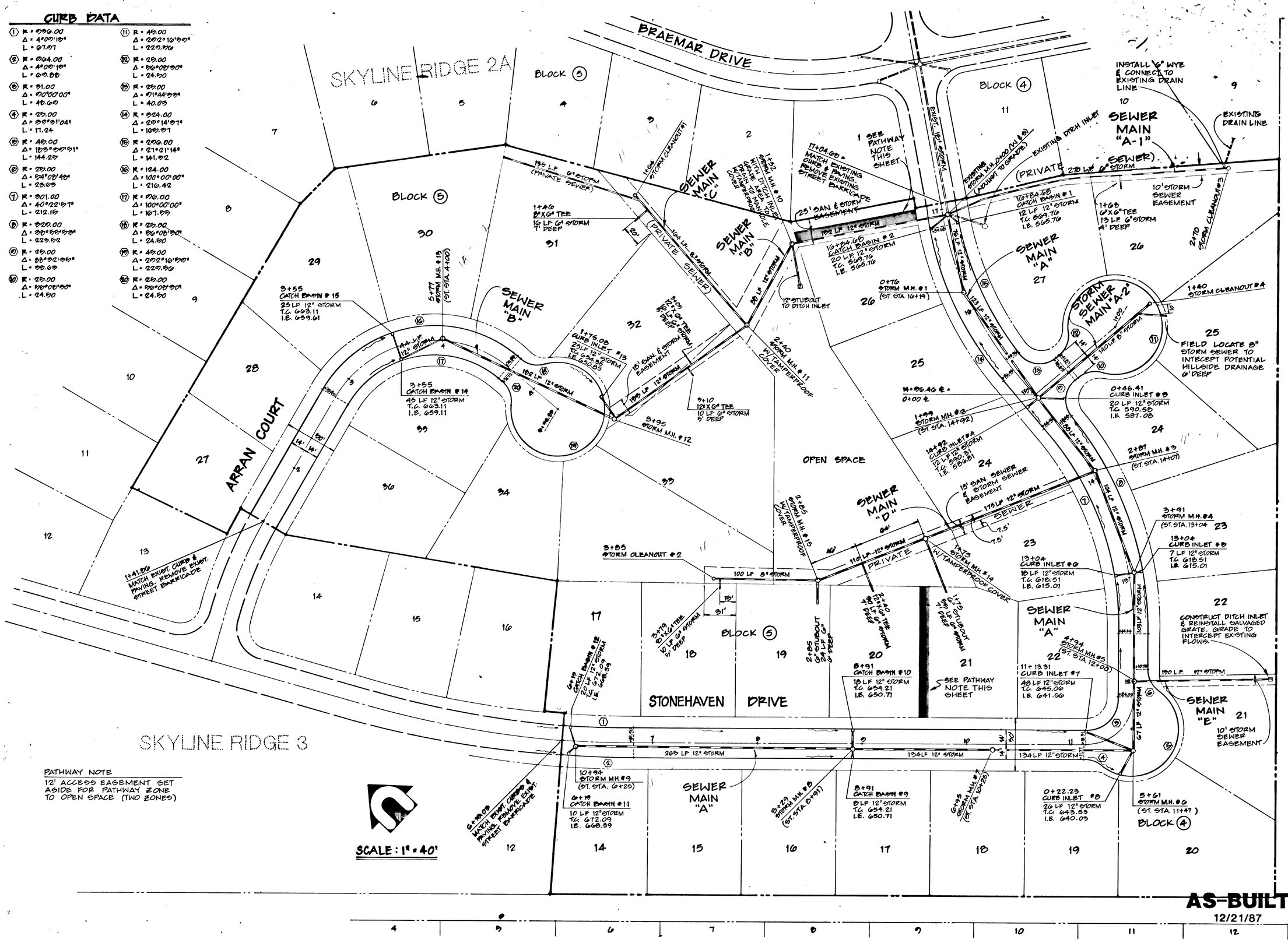

SKYLINE RIDGE IV

CENTURION HOMES, INC.
WEST LINN, OREGON

STREET AND STORM SEWER PLAN

DAVID EVANS AND ASSOCIATES, INC.

1. CITY APPROVED, ISSUED FOR CONSTRUCTION 7-8-87

REVISIONS

SCALE 1" = 40'
DATE JUNE 24, 1987
DESIGN BLM
DRAWN JSE
CHECKED
SHEET 1 OF 9

Skyline Ridge IV

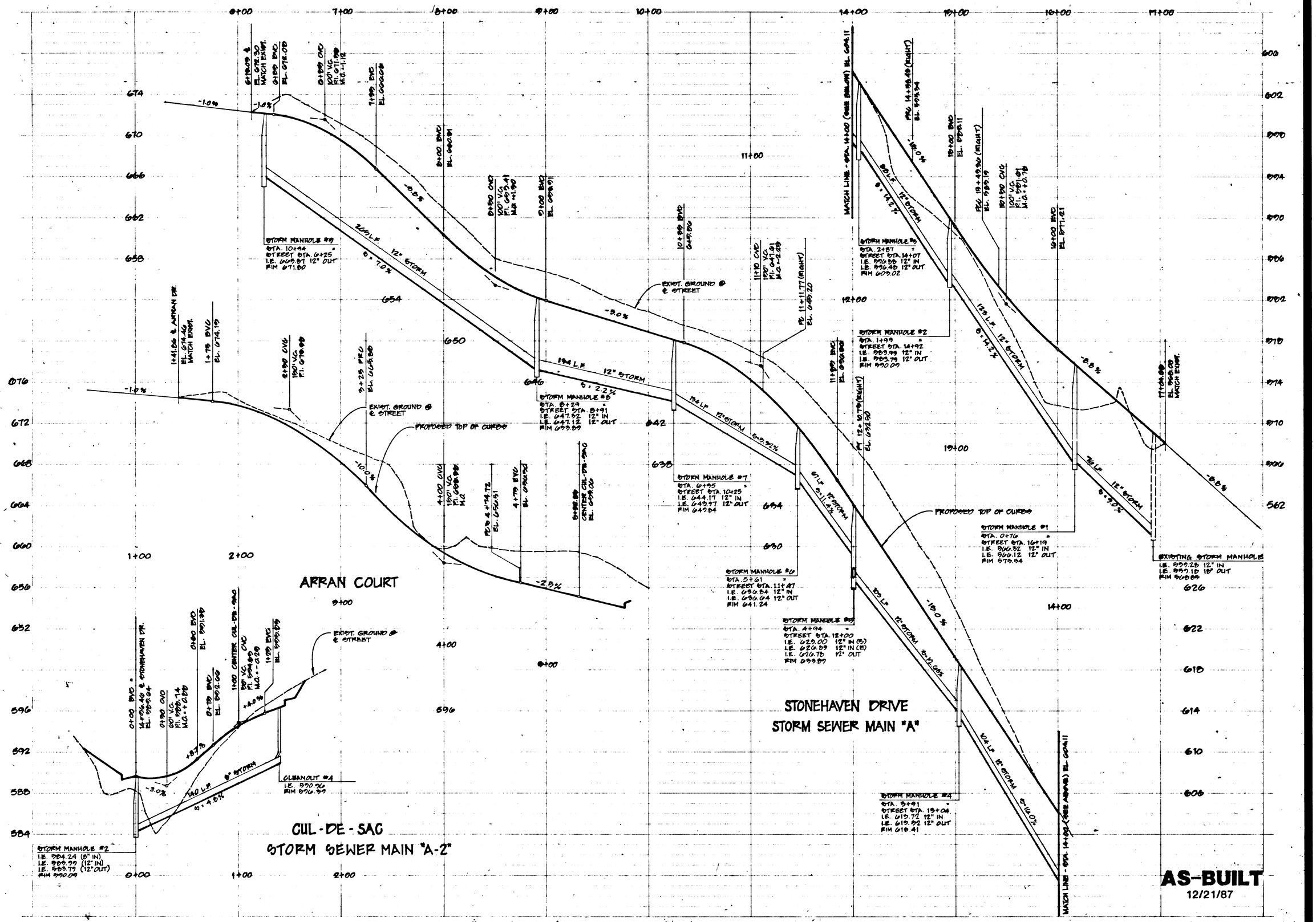

SKYLINE RIDGE IV

CENTURION HOMES, INC.
WEST LINN, OREGON

STREET AND STORM SEWER PROFILES

REGISTERED PROFESSIONAL ENGINEER
OREGON
OCT. 19, 1987
A.O. RIGHELLIS

DEN
DAVID EVANS AND ASSOCIATES, INC.
2626 SW CORBETT AVE. PORTLAND, OR 97201 503/223-6663

1. CITY APPROVED, ISSUED FOR CONSTRUCTION 7-8-87

SCALE 1"=40' HORIZ. 1"=4' VERT.
DATE
FILE CH1008
DESIGN BLM
DRAWN JSE
CHECKED
REVISIONS

2 OF 9 SHEETS

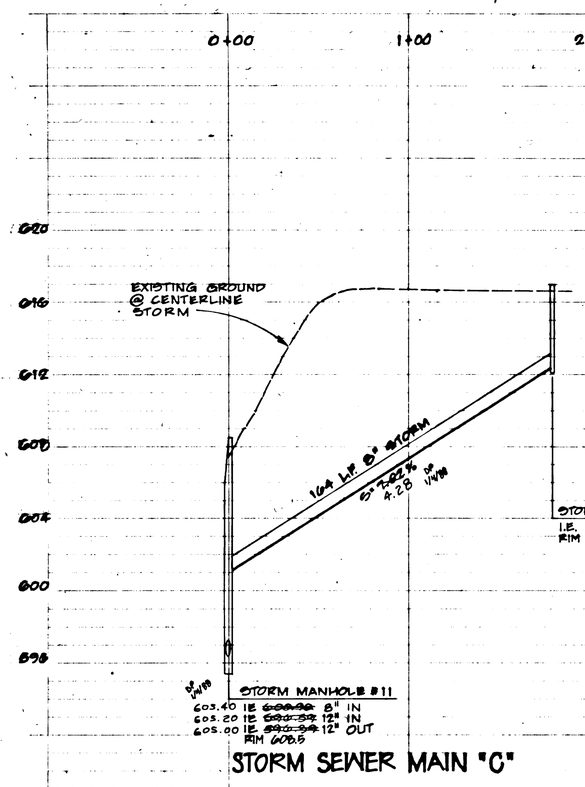

STORM SEWER MAIN "C"

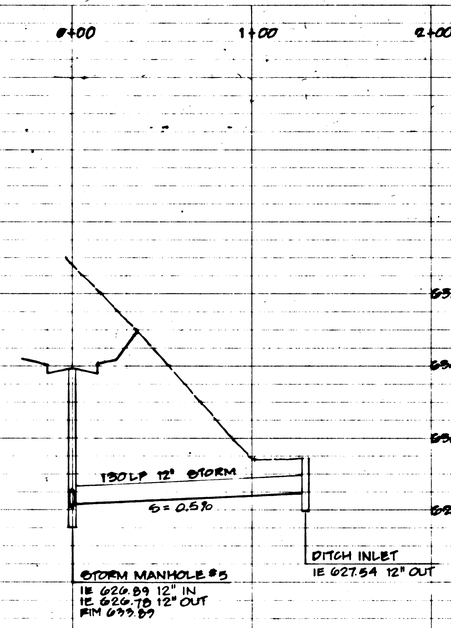

STORM SEWER MAIN "E"

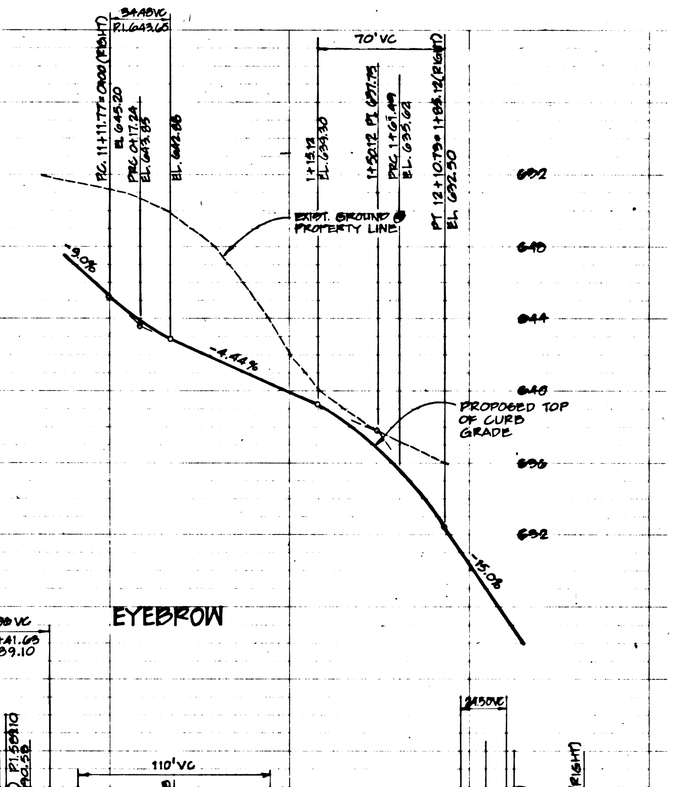

EYEBROW

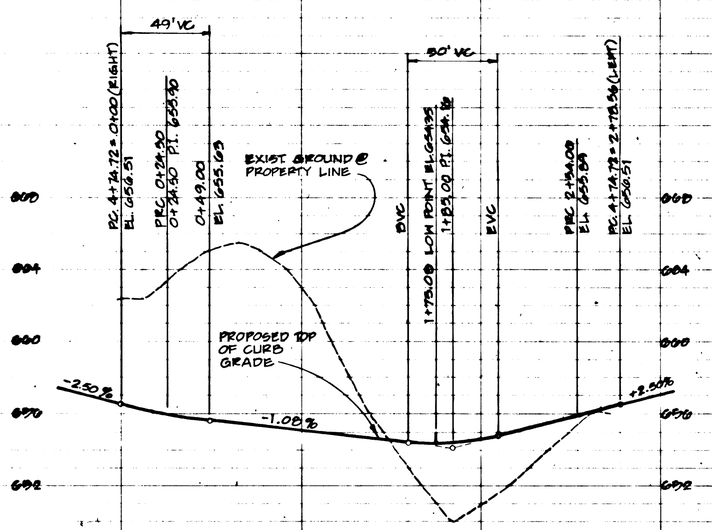

ARRAN COURT CUL-DE-SAC

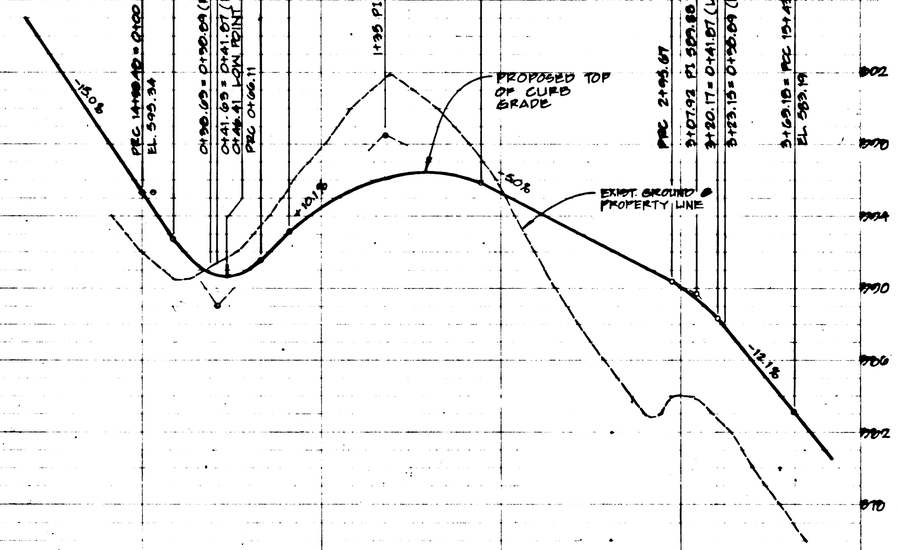

CUL-DE-SAC

AS-BUILT
12/21/87

SKYLINE RIDGE IV

CENTURION HOMES, INC.
WEST LINN, OREGON

STREET AND STORM SEWER PROFILES

REGISTERED PROFESSIONAL ENGINEER
OREGON
A.D. RIGHETTI
OCT. 15, 1987

1. CITY APPROVED, ISSUED FOR CONSTRUCTION 7-8-87

DAVID EVANS AND ASSOCIATES, INC.
2828 SW CORBETT AVE., PORTLAND, OR 97201-503/228-4844

3 OF 9

SCALE 1"=20' HORIZ. 1"=4' VERT.
DESIGN BLM
DATE
DRAWN JRE
DATE CHK'D
CHECKED
REVISIONS

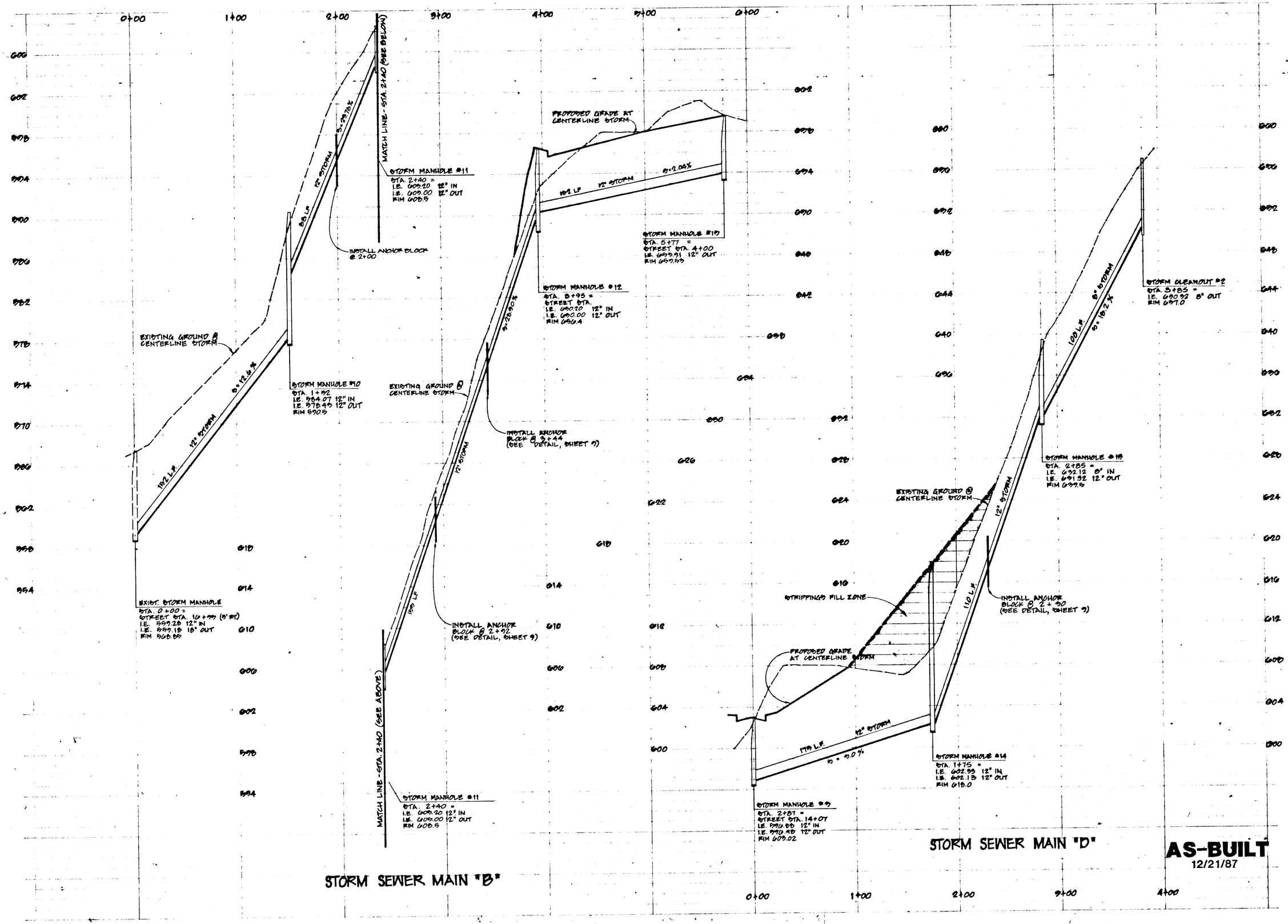

SKYLINE RIDGE IV

CENTURION HOMES, INC.
WEST LINN, OREGON

STORM SEWER PROFILES

REGISTERED PROFESSIONAL ENGINEER
OREGON
OCT. 10, 1967
A. O. RIGHETTI

DAVID EVANS and ASSOCIATES, INC.
2828 SW CORBETT AVE., PORTLAND, OR 97201 (503) 223-6663

1. CITY APPROVED, ISSUED FOR CONSTRUCTION 7-8-87

SCALE	1"=40' HORIZ. 1"=4' VERT.
DATE	
FILE	CH1 029
DRAWN	JGR
DESIGN	
REVISIONS	

4 OF 9 SHEETS

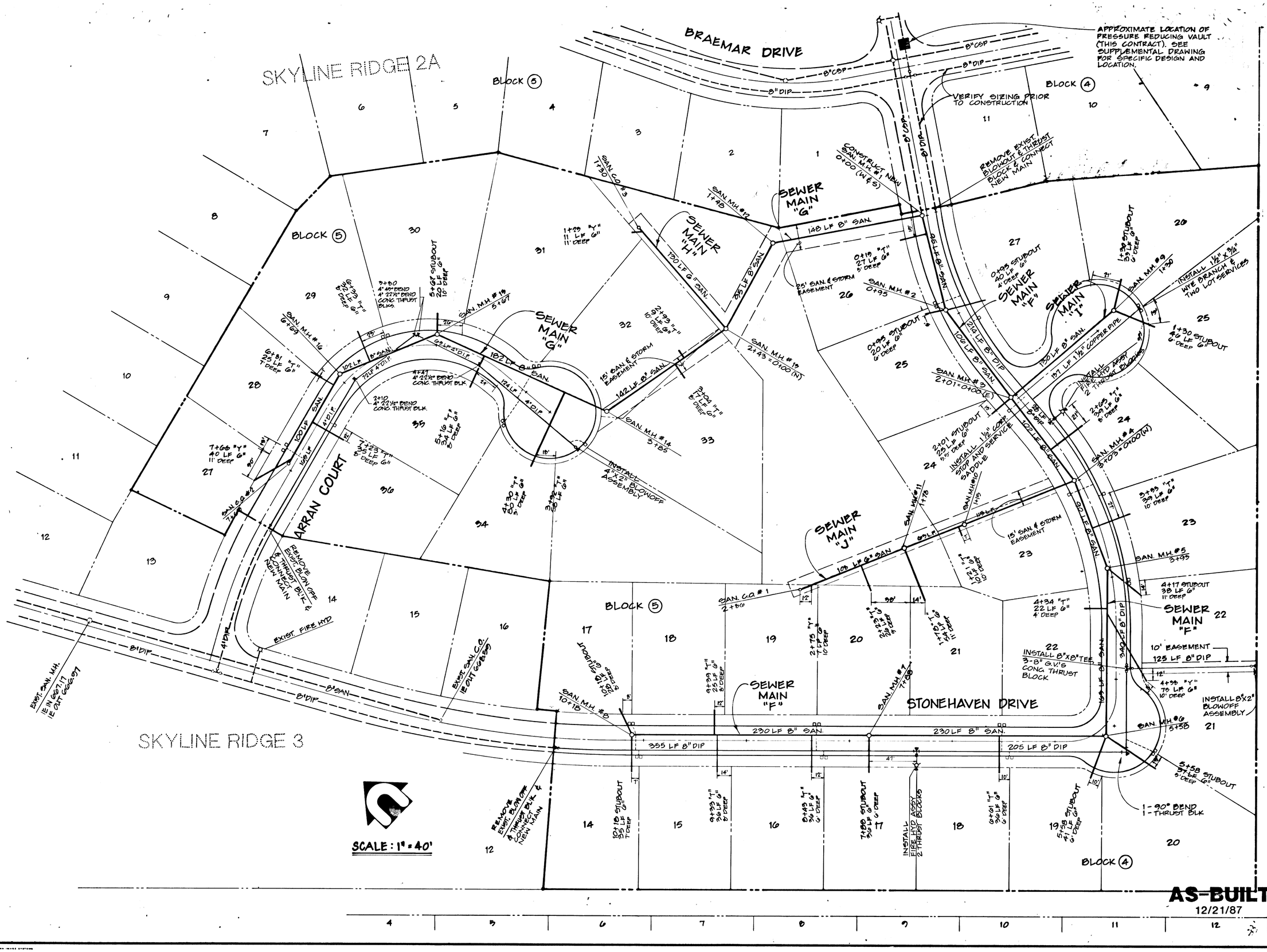

SKYLINE RIDGE IV

CENTURION HOMES, INC.

WEST LINN, OREGON

SANITARY SEWER AND WATER PLAN

DAVID EVANS and ASSOCIATES, INC.

1. CITY APPROVED, ISSUED FOR CONSTRUCTION 7-8-87

5 of 9

SCALE 1" = 40'

DATE JUNE 24, 1987

DESIGN DLM

DRAWN

CHECKED

REVISIONS

CH1D02

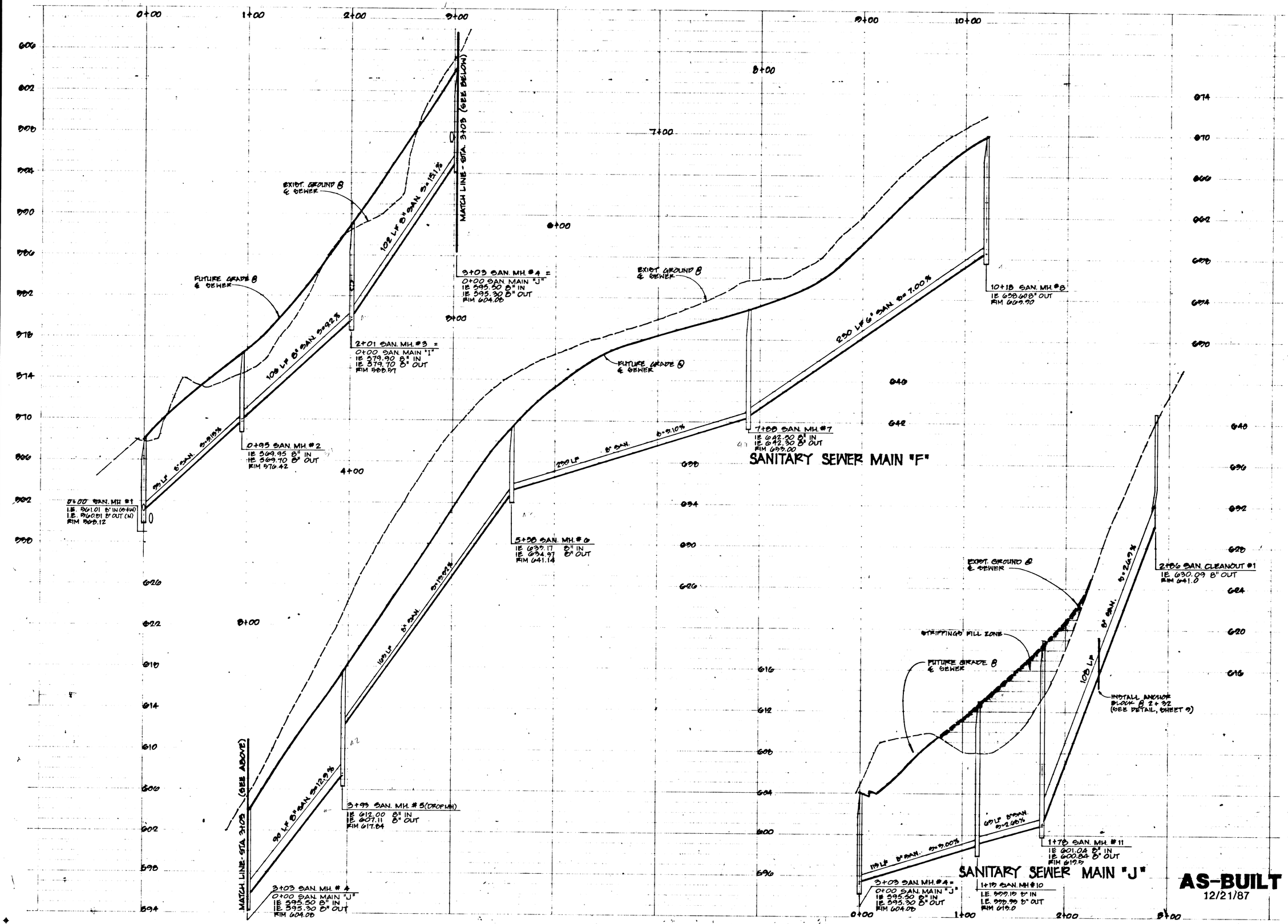

SKYLINE RIDGE IV

CENTURION HOMES, INC.
WEST LINN, OREGON

SANITARY SEWER PROFILES

REGISTERED PROFESSIONAL ENGINEER
OREGON
A.O. RIGHELLIS

DAVID EVANS AND ASSOCIATES, INC.
2828 SW CORBETT AVE. PORTLAND, OR 97201-503/223-6663

1. CITY APPROVED, ISSUED FOR CONSTRUCTION 7-8-87

REVISIONS

6 OF 9 SHEETS

SCALE 1"=40' HORIZ. 1"=4' VERT.
DRAWN BLM
DATE
DESIGNED JSE
FILE CH1008
CHECKED

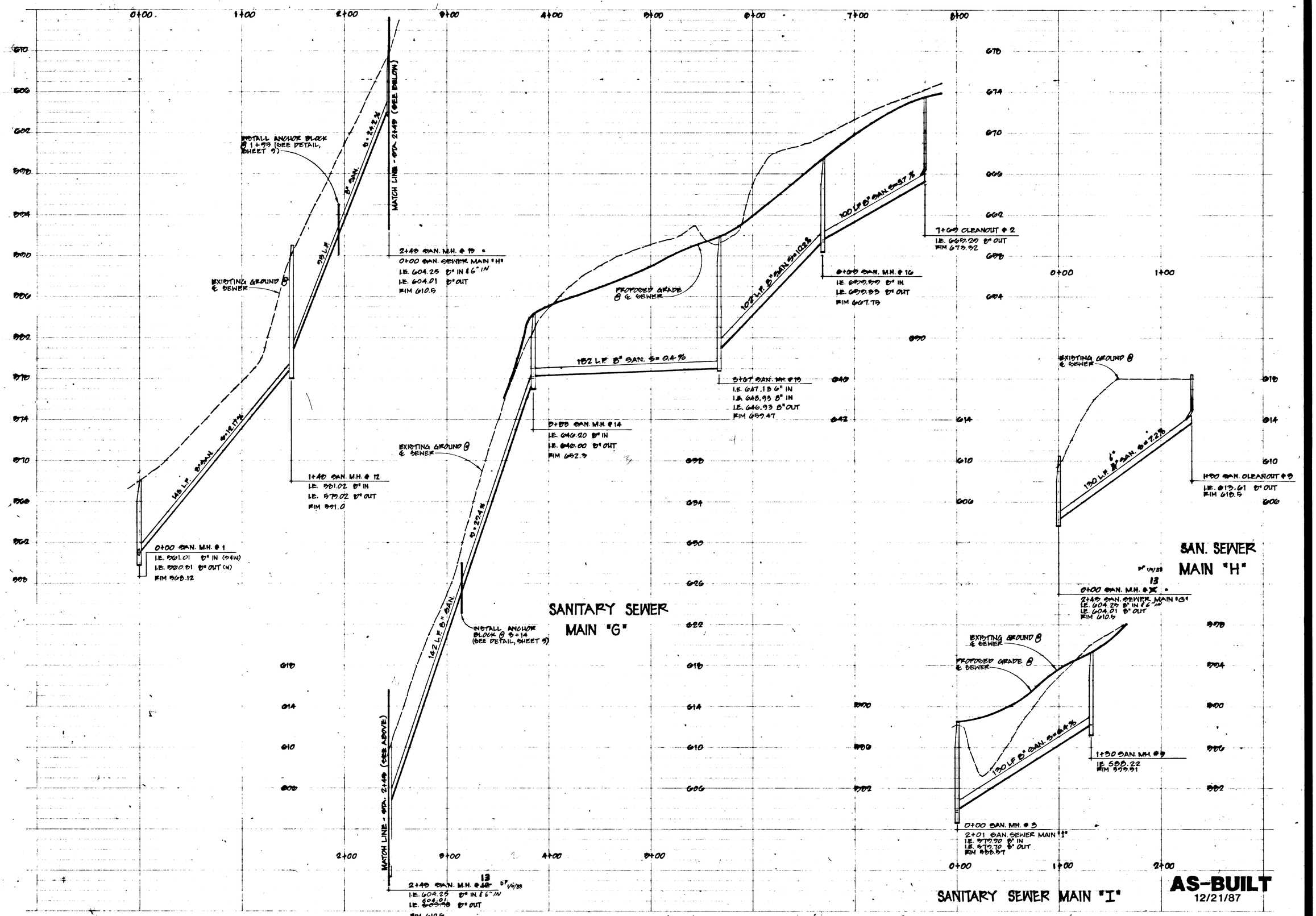

SKYLINE RIDGE IV

CENTURION HOMES, INC.
WEST LINN, OREGON

SANITARY SEWER PROFILES

REGISTERED PROFESSIONAL ENGINEER
JOHN A. SCHMITZ
OREGON
JULY 6, 1988
EXPIRES 12-31-88

1. CITY APPROVED, ISSUED FOR CONSTRUCTION 7-8-87

REVISIONS

DAVID EVANS and ASSOCIATES, INC.
2828 SW CORBETT AVE., PORTLAND, OR 97201 (503) 223-6663

SHEET 7 OF 9 SHEETS

SCALE: 1" = 40' HORIZ. 1" = 4' VERT.
DESIGN: BLM
DRAWN: JAS
DATE: CHI 07/89
CHECKED:
FILE:

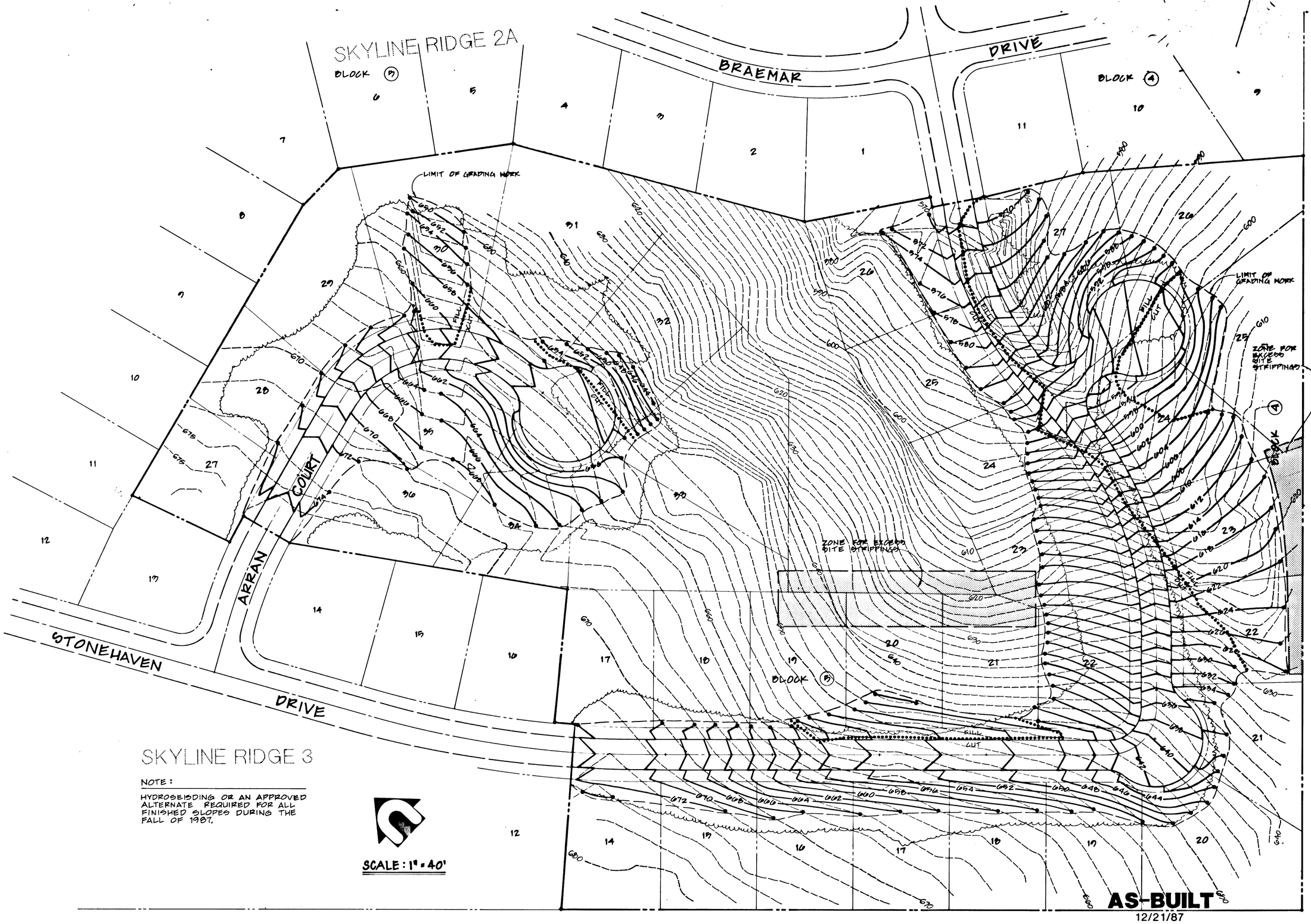

SKYLINE RIDGE IV

CENTURION HOMES, INC.
WEST LINN, OREGON
GRADING PLAN

REGISTERED PROFESSIONAL ENGINEER 10902 OREGON A.O. RIGHELLIS

DEN
DAVID EVANS AND ASSOCIATES, INC.

1. CITY APPROVED, ISSUED FOR CONSTRUCTION 7-8-87

18 9

SCALE 1" = 40'
DATE JUNE 24, 1987
FILE CM1008
DESIGN BLM
DRAWN JSE
CHECKED
REVISIONS

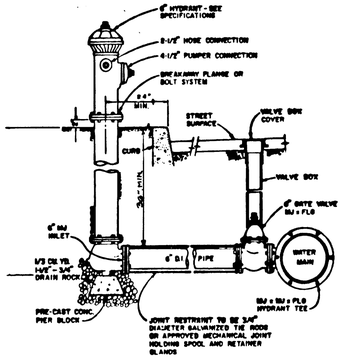

STANDARD FIRE HYDRANT

N.T.S.

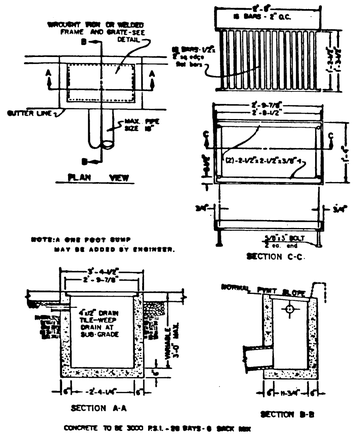

CATCH BASIN

N.T.S.

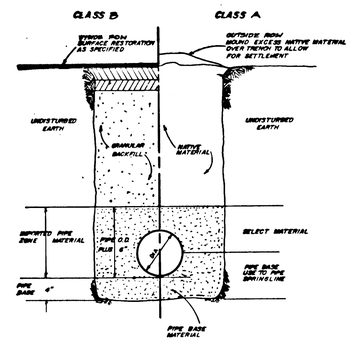

TRENCH BACKFILL DETAILS

N.T.S.

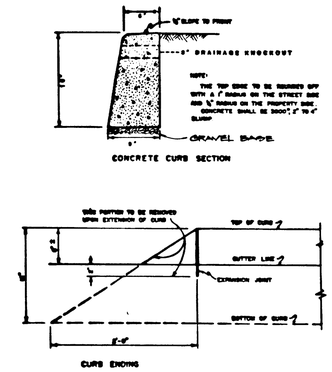

CONTRACTION JOINTS: 15' MAX. SPACE
EXPANSION JOINTS: 45' MAX. SPACE ALSO PROVIDE EXPANSION JOINTS AT CURB CUTS AND RETURNS

STANDARD CURB

N.T.S.

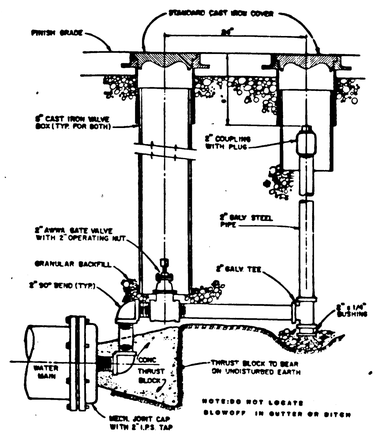

BLOW OFF

N.T.S.

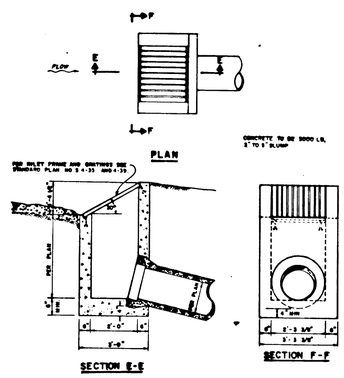

CONCRETE FIELD INLET

N.T.S.

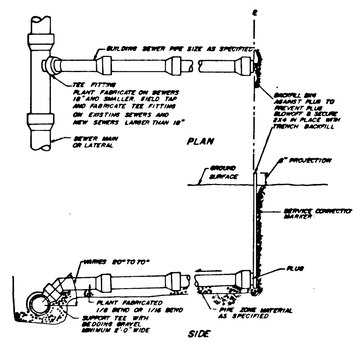

BUILDING SEWER

N.T.S.

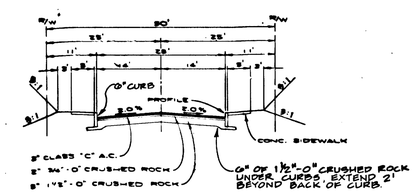

28' STREET SECTION

N.T.S.

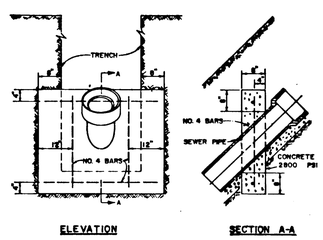

ANCHOR BLOCK

N.T.S.

NOTES
PER CURB
1. Concrete 3300 psi or 28 days (2-6" slump)
2. Weakened planes are required at all new intersections.
3. Expansion joints (1") max spacing. Expansion joints 45 max spacing. Also provide expansion joints at ends of driveways and returns.
4. Dowel bars required at all expansion joints with monolithic curb and gutter.
5. Base base 1-1/2" 0 crushed rock, 95 % compaction.
6. Replacement curbs must be poured against a vertical edge of remaining curb with expansion joint.
7. Concrete in replacement curb shall not extrude past the face of the curb in the section replacement area.
8. Weakened plane shall not exceed depth as shown 1/4" to 1/3.
9. Mitre joints shall be 1/3 the curb dimension in depth.

DETAIL AT CURB
No Scale

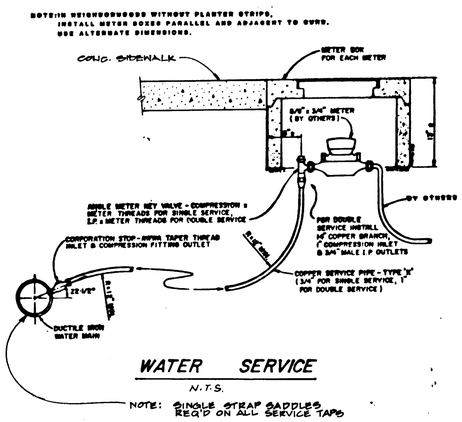

WATER SERVICE

N.T.S.

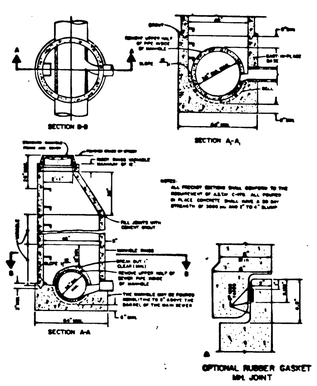

STANDARD PRECAST MANHOLE

N.T.S.

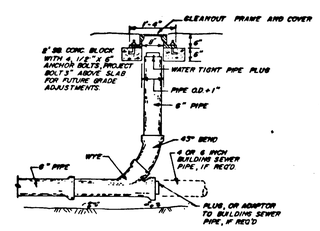

CLEANOUT

N.T.S.

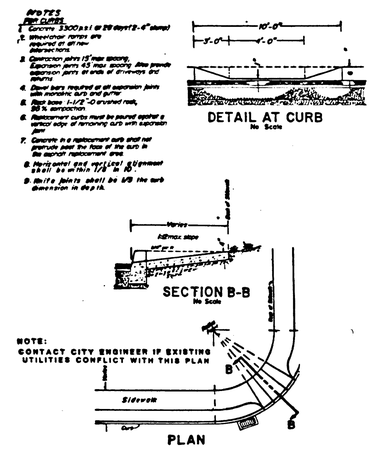

WHEELCHAIR RAMP

N.T.S.

AS-BUILT
12/21/87

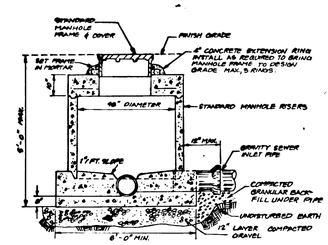

STANDARD SHALLOW MANHOLE

N.T.S.

SKYLINE RIDGE IV

CENTURION HOMES, INC.
WEST LINN, OREGON
DETAILS

REGISTERED PROFESSIONAL ENGINEER
R. O. RIGHELLO
OREGON
Oct. 10, 1987

DAVID EVANS and ASSOCIATES, INC.
3895 SW CORBETT AVE., PORTLAND, OR 97239-5023-8663

1. CITY APPROVED, ISSUED FOR CONSTRUCTION 7-8-87

SCALE	No SCALE	DRAWN	B.L.M.
DATE	6-24-87	DRAWN	J.S.E.
FILE	CH1008	CHECKED	

9 OF 9