ROSEMONT POINTE

MAY 2005

DEVELOPER:

RENAISSANCE DEVELOPMENT

16771 BOONES FERRY ROAD
LAKE OSWEGO, OR 97035

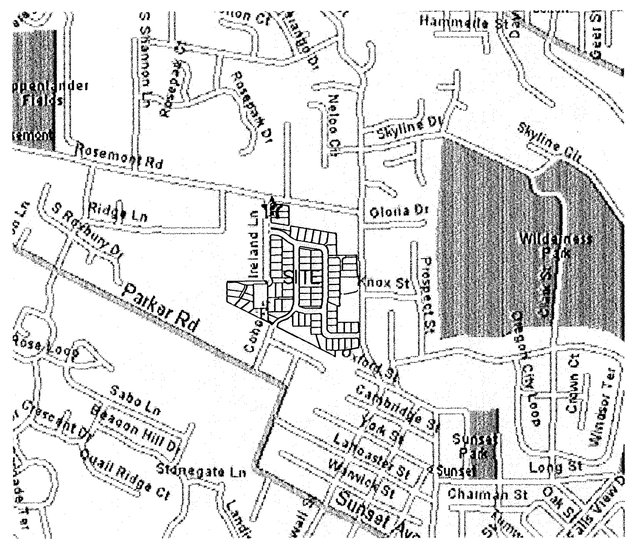

VICINITY MAP
N.T.S.

UTILITY LOCATE NUMBER:
"ONE CALL" NUMBER (503) 246-6699

SISUL ENGINEERING

375 PORTLAND AVE.
GLADSTONE, OR. 97027
(503) 657-0188

INDEX

SHEET	DESCRIPTION
1	SITE MAP AND NOTES
2	WATERLINE PLAN
3	SANITARY SEWER PLAN
4	SANITARY SEWER PROFILES
5	SANITARY SEWER PROFILES
6	STREET AND STORM DRAIN PLAN
6A	SUMMIT STREET IMPROVEMENTS
7	STREET AND STORM DRAIN PROFILES
8	STREET AND STORM DRAIN PROFILES
9	STREET AND STORM DRAIN PROFILES & DETAILS
10	TYPICAL SECTIONS
11	GRADING AND EROSION CONTROL PLAN
~~12~~	~~RETAINING WALLS~~
~~13~~	~~RETAINING WALL DETAILS~~
~~14~~	~~RETAINING WALL DETAILS~~
~~14A~~	~~RETAINING WALL DETAILS~~
15	TREE PROTECTION PLAN
16	DETAILS
17	DETAILS
L1	PLANTING PLAN
L2	PLANTING PLAN
L3	PLANTING PLAN
L4	IRRIGATION PLAN

AS BUILT

MOST RECENT REVISION TO THIS SET OF PLANS:
12/14/06

REGISTERED PROFESSIONAL ENGINEER
OREGON
JULY 9, 2001
MARK P. MORRISON
12/14/06

SITE MAP

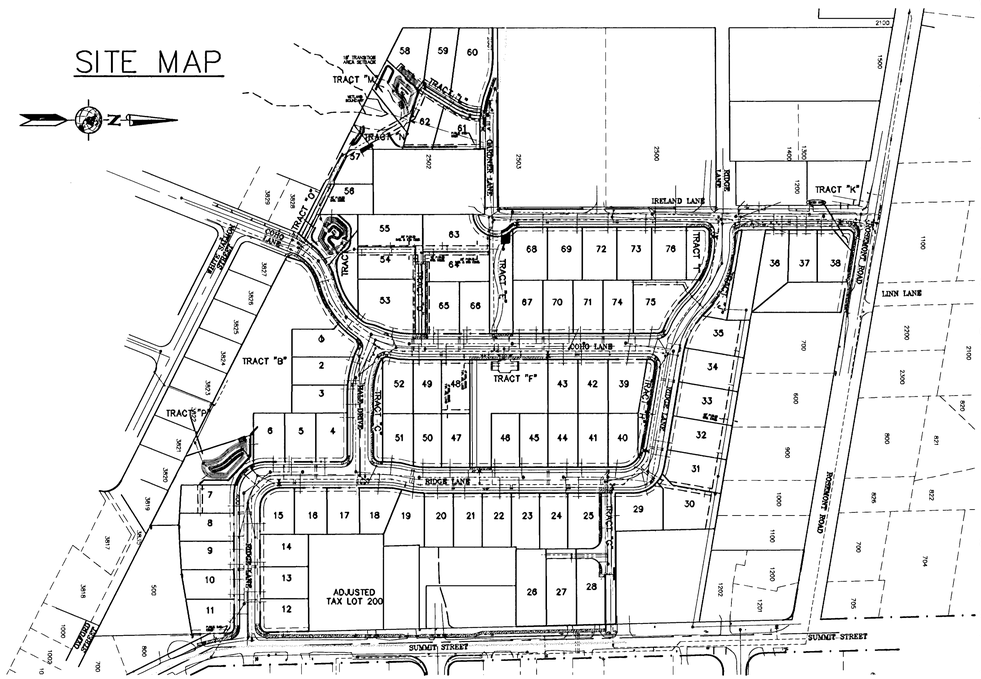

Seeding/Mulching:
1. All areas disturbed during construction to be graded to drain and compacted to a minimum of 90% of AASHTO T-99 immediately after installation of utilities or grading.
2. Recommended Seed Mixture: 80% PR 8820 Dwarf Perennial Ryegrass and 20% Creeping Red Fescue, by weight. Application Rate shall be 100 pounds minimum per acre.
3. Fertilizer shall be 12-16-8 with 50% of the nitrogen derived from UREA FORMALDEHYDE, and applied at a rate of 400 pounds per acre.
4. Seed and mulch at a rate of 2000 lbs/Ac with heavy bonding agent or netting and anchors. Mulch shall be a wood cellulose fiber or other material suitable for hydromulching.
5. Temporary or Permanent Hydroseeding or acceptable seeding and mulching must be provided whenever perennial cover cannot be established on sites which will be exposed for 60 days or more.

Streets:
1. New street sections are to be cleared of all surface vegetation and other miscellaneous structures or materials. Grub improvement areas to remove all buried vegetative matter and debris to a depth of 8" below subgrade. Properly dispose of all waste material.
2. Street subgrade shall conform to Division 501 of the City of West Linn Standard Construction Specifications. Areas to receive fill are to be inspected by City of West Linn personnel prior to placement of the fill. The Contractor shall have fill areas tested for compaction by a certified testing lab in accordance with W.L.S.C.S. Division 501.03.08. Such testing will be at the contractor's expense
3. Aggregate base rock shall conform to the requirements of W.L.S.C.S. Division 205. Base course shall be 1½"-0 crushed rock and leveling course shall be 3/4"-0. City of West Linn requires a proof roll with a loaded 10 yard dump truck of the subgrade prior placement of the rock and again after placement of the base rock and prior to paving. All underground utilities including laterals, services and power or gas conduits will be in place before subgrade proof roll will take place.
4. Asphalt concrete shall conform to the requirements of W.L.S.C.S. Division 205. 2" base lift shall be Class 'B' A.C. and 2" final lift shall be Class 'C' A.C. meeting the specifications of W.L.S.C.S. Division 505. The top lift of asphalt concrete shall not be placed prior to receiving permission from the City of West Linn Engineering Department
5. Construct curb and gutter using 3300 psi concrete meeting the specifications of W.L.S.C.S. Division 205 (after 28 days) with maximum 1½" aggregate size. Contraction joints at 15' maximum on centers. Three inch weepholes are to be installed on all lots uphill or even with the street. Generally weepholes shall be located at the center and lowest edge of curb for each lot. Handicap ramps shall be constructed at each curb return at intersections by contractor unless otherwise noted on the plans. Contractor shall stamp location of sewer and water crossings with an (S) or a (W). A proof roll of the curblines is required prior to pouring curbs.
6. All materials, installation, tests, and inspections to be in strict accordance with City of West Linn Public Works Standard Construction Specifications.
7. A street construction encroachment permit or similar permit may be required from the City of West Linn. Construction permit fees or other similar fees or bonding required of the contractor will be the contractor's responsibility to obtain
8. Monument boxes will be required at all street centerline intersections, points of curvature and points of tangency. Boxes shall conform to Clackamas County Surveyor requirements.

Structural Fill Notes:
1. Besides the structural fill that will be required for construction of street improvements a structural fill is also to be built on lots where noted on the plans to the specifications noted below, unless modified by the Geotechnical Engineer.
2. All miscellaneous materials and the organic layer under the fill area shall be stripped or removed. All stumps in the fill area must be removed in their entirety.
3. The contractor shall coordinate with the project Geotechnical Engineer to inspect and provide testing services and to certify that the structural fill meets the compaction requirements appropriate for home construction and the requirements of the City of West Linn Grading Permit for this project. The contractor must obtain the grading permit and attend a grading pre-construction meeting with the City of West Linn prior to beginning work on the project
4. Fill material should be placed in horizontal lifts approximately 8 inches thick (loose) and compacted to at least 95% of the maximum dry density, as determined per 501.03.04 Construction Standards, unless modified by the Geotechnical Engineer. Moisture content of the structural fill shall be controlled to within 2% of the optimum moisture content at the time of compaction, unless modified by the Geotechnical Engineer.
5. Inspections by the Geotechnical Engineer will be required after stripping of topsoil and prior to fill placement, after each lift completed and after all fill is completed. Contractor is responsible for coordinating inspections by the Geotechnical engineer.
6. At the completion of fill activities a final report to the City of West Linn by the Geotechnical Engineer is required

Water Supply
1. Water mains shall be ductile iron pipe conforming to AWWA C151 Class 52. Pipe is to have cement mortar lining and bituminous seal coat conforming to AWWA C104. Joints are to be push-on rubber gasketed joints unless noted otherwise on the plan. Pipe fittings are to be of the same material and class as pipe and of domestic origin
2. Water mains to have a minimum cover of 36"
3. Thrust blocks are to be provided at all changes in direction and branches. Thrust blocking concrete strength is to be 3000 psi. See details for thrust block sizing. Pour thrust blocks against undisturbed earth.
4. Gate valves shall be resilient seat, non rising stem with "O" ring packing, complying with AWWA Class "C" Specifications. The valves shall be designed to withstand a working pressure of 150 psi. Gate valves shall be furnished with a two-inch square operating nut and shall open counter clockwise when viewing from above. Butterfly valves shall be rubber seat type and bubble-tight at 150 psi, and shall conform to AWWA C504. Butterfly valves shall be Mueller or approved equal. Operating nut shall be located on the side of the main shown on the plans. Valve boxes shall be "Vancouver" pattern.
5. Fire hydrants shall conform with AWWA Specification C-502. Pumper outlet is to face the direction of access. Acceptable models are Mueller Centurion A-423 or Clow Medallion F-2545. Hydrant color shall be yellow
6. Granular backfill (3/4"-0) is to be compacted to 95% maximum dry density per AASHTO T 180 test method and native material shall be compacted to 95% of in-place dry density of surrounding soil. Excavation, bedding and backfill shall be in accordance with Division 204 of the City of West Linn Standard Construction Specifications. Backfill under new streets shall be Class "B" and backfill in existing streets shall be Class "E".
7. Service laterals shall be Type K copper. Lateral sizes shall be 1". For double services two 1" water services shall be laid side by side. Corporation stops shall be Mueller H 15008 or Ford F1000 4Q. Angle meter stop shall be Mueller H 14258 or Ford 1"-KV43-444W-Q. Meter boxes shall be equal to Brooks #37 with a 37-S lid and cover. Meter boxes are to be installed 3/4" above finish grade and 2½" from the curb in planter strips or flush with sidewalk surface in a sidewalk.
8. All waterlines will be pressure tested and purification tested before connection to the city water system. Pressure test shall be conducted at 180 psi or 1.5 times the normal working pressure, whichever is higher and shall meet the requirements of Division 403.14 of the West Linn Public Works Standard Construction Specifications
9. Chlorination shall conform with Division 403.14 of the W.L.S.C.S.
10. Do not connect new pipe to existing pipe prior to testing. The City of West Linn requires acceptance of new waterline prior to connection to existing water system
11. A plumbing permit from the City of West Linn Building Department is required for service lateral installations beyond the water meter.
12. All materials, installation, tests, and chlorination to be in strict accordance with the City of West Linn Public Works Standard Construction Specifications, and the Oregon State Health Division Administrative Rules, Chapter 333

Sanitary Sewer:
1. Pipe shall be PVC sewer pipe conforming to ASTM D-3034 SDR 35. Minimum stiffness shall be 46 psi and joint type shall be elastomeric gasket conforming to ASTM D-3212.
2. Manhole base shall be poured in place concrete base with a minimum compressive strength of 3300 psi or precast. Manhole risers and tops shall be precast sections with minimum compressive strength of 4000 psi. Tops shall be eccentric cones except where insufficient headroom requires flat tops. Inverts shall be constructed so as to provide smooth flow-through characteristics and channels must be able to pass a 7" x 30" cylinder into pipes. PVC pipe shall be connected to manhole by means of a flexible connection and shall have a shear joint located 18" outside of manhole. Cement grout for connecting PVC sewer pipe to manhole will not be permitted.
3. All manholes located in easement areas require tamper proof lids and the lid shall be set 12 inches above proposed grade
4. Cleanout pipe, fittings, and joints shall be the same specifications as for pipe. Castings are as shown on detail and shall conform to ASTM A48 (Grade 30). Cleanout riser shall match downstream pipe diameter. Frame shall set on 18" x 24" concrete pad.
5. Granular backfill (3/4"-0) is to be compacted to 95% maximum dry density per AASHTO T-180 test method and native material shall be compacted to 95% of in-place dry density of surrounding soil. Excavation, bedding and backfill shall be in accordance with Division 204 of the City of West Linn Standard Construction Specifications. Backfill under new streets shall be Class "B" and backfill in existing streets shall be Class "E".
6. PVC service laterals shall be 4" pipe conforming to the same specifications as the sewer mains. Service laterals shall be installed to a point beyond the line of the sewer or utility easement as shown on the plan. The service lateral shall be plugged with a 4" rubber ring plug, and the location of the lateral's end marked with a 2" x 4" stake painted green
7. Sanitary sewer pipe and appurtenances shall be tested for leakage in accordance with W.L.S.C.S. Division 301.03.09 and manholes shall be vacuum tested in accordance with W.L.S.C.S. Division 302.03.07. All tests shall be witnessed by the Engineer and the City of West Linn. Contractor is responsible for coordinating testing so that all tests shall be passed and new line shall be accepted prior to connection to existing system.
8. A plumbing permit from the City of West Linn Building Department is required for sanitary sewer laterals beyond the first cleanout.
9. All materials, installation, tests, and inspections to be made in strict accordance with City of West Linn Public Works Standard Construction Specifications.

Storm Drains:
1. Eight inch to 24-inch storm drain pipe is preferred to be seamless ribbed PVC pipe conforming to ASTM F 794. Where larger pipe is required or lack of cover prevents use of ribbed PVC pipe, pipe shall be Class 3 non-reinforced, concrete pipe conforming to ASTM C14, reinforced concrete pipe conforming to ASTM C-76, Class IV, or ductile iron pipe conforming to AWWA C151 Class 52. Rubber joints are required for all concrete pipe. Six inch and smaller storm drain pipe shall conform to ASTM D 3034 PVC pipe.
2. Gutter inlets shall be poured in-place concrete with a minimum compressive strength of 3300 psi. Frame shall be fabricated of structural steel, ASTM A-7, A-36, A 373.
3. Manhole base may be poured in place concrete with a minimum compressive strength of 3300 psi or precast. Manhole risers and tops shall be precast sections with a minimum compressive strength of 4000 psi. Tops shall be eccentric cones except where insufficient headroom requires flat tops. Interior dimensions noted on the plans are minimums. Some or all of the storm drain manholes required will be oversized manholes, contractor shall check with manhole manufacturer for actual size of manhole needed for type and size of pipe to be used. Inverts shall be constructed so as to provide smooth flow through characteristics. Pipe shall be connected to manhole by means of a flexible connection and shall have a shear joint located 18" outside of the manhole
4. All manholes located in easement areas require tamper proof lids and lid shall be set 12 inches above proposed grade.
5. Cleanout pipe, fittings, and joints shall be the same specifications as for pipe. Castings are shown on detail and shall conform to ASTM A48 (Grade 30). Cleanout riser shall match downstream pipe diameter
6. Granular backfill (3/4"-0) is to be compacted to 95% maximum dry density per AASHTO T-180 test method and native material shall be compacted to 95% of in-place dry density of surrounding soil.
7. Storm drain service laterals shall be 4" pipe conforming to the same specifications as the storm drain main lines. Service laterals shall be installed to a point beyond the line or utility easement as shown on the plan. The service lateral shall be plugged with a 4" rubber ring plug, and the location of the laterals end marked with a 2"x4" stake painted white.
8. Riprap where noted on the plans is to be Class 50 in accordance with Oregon State Highway Division specification 714.
9. Private catchbasin shall be trapped and sumped Gibson Steel pre-fabricated catchbasin or approved equal.
10. Storm drains shall be tested for deflection in accordance with Division 601.03.11 and video inspected in accordance with Division 601.03.12 of the West Linn Standard Construction Specifications. All tests shall be witnessed by the Engineer and a representative of the City
11. A plumbing permit from the City of West Linn Building Department is required for storm drains beyond the first cleanout.
12. All materials, installation, tests, and inspections to be in strict accordance with the City of West Linn Standard Construction Specifications.
13. Detention pond plantings to conform to planting plans, Sheets L1 – L3.

General Notes:
1. All references to City design standards refer to the current standards.
2. The Design Engineer will be responsible for inspection of the proposed improvements with oversight from the City's Public Works and Engineering staff.
3. A work schedule will be required from the contractor so that the Engineer can have an inspector onsite at the appropriate times. If the work schedule is revised the contractor is to notify the Engineer of the changes. Additionally, the contractor is to give the Engineer at least 24 hours notice of any testing requiring the presence of the Engineer and/or City staff
4. The contractor is to receive the approval of the Engineer and the City of any proposed changes to the plans or standard requirements
5. A Building Department Plumbing Permit is required for utilities beyond the first cleanout or meter on private property.
6. A Public Improvement Guarantee Agreement or a Public Works Permit, a pre-construction meeting with the City of West Linn, and installation of erosion control measures are required prior to beginning construction
7. Prior to site clearing, 6' tall chain-link fencing shall be placed at tree easement boundaries prior to site grading. The City Arborist shall inspect & approve all onsite tree protection measures prior to the start of site work. It is the contractors responsibility to contact the City Arborist and arrange for this approval to take place. No permits will be issued from Engineering, Planning, or Building Departments without tree protection approval from the City Arborist. All tree protection measures shall remain in place and fully functional for the entire time that site work and construction is taking place.
8. A City representative and a representative of the engineer must be present at all testing and the City shall be furnished a copy of all test results. If engineer or City do not witness testing, contractor will be required to re-test.
9. All fees for street trees shall be paid to the City of West Linn Parks and Recreation Department
10. No building permits will be given until the improvements have been accepted by the City as substantially complete.
11. Contractor shall verify depth and location of existing utilities and points of connection prior to ordering manholes. If discrepancies are found, contractor shall notify the Engineer.

Construction Staking Notes:
The Developer has contracted with Griffin Land Surveying (503-579-8503) to provide construction staking as outlined below. The contractor is to give the Surveyor at least a week notice of when the first construction staking will be needed. After the initial staking on the project, requests for staking should be given at least 3 working days (72 hours) in advance of when staking is desired. When called to the site for staking the Surveyor will stake each phase of the project in a manner that is most efficient for the Surveyor. Additional staking requested by the contractor or restaking required due to the contractor's carelessness will be charged to the contractor. In addition, if survey control monuments (which will be plainly identified) are destroyed by the contractor, the contractor will be charged for the re-establishment of the monuments. Staking to be provided is as follows:
1. Sanitary sewer cut stakes at the following stations, 10', 25', 50', 100', and every 100' thereafter, following each manhole.
2. Storm drain cut stakes at the following stations, 10', 25', 50', 100', and every 100' thereafter, following each manhole or catch basin.
3. Rough grade stakes for street coring set on centerline at 50 foot stations. Extra stakes will be provided in cul-de-sacs and street knuckles.
4. Set temporary front corners at water service locations and stake waterline angle points and fire hydrant locations (after street coring).
5. Set curb stakes at 50 foot stations on the tangent and 25 foot stations in the curves.
6. Mark property line locations on curbs for private utilities.

Erosion and Sediment Control Requirements:
1. The intent of the requirement is to prevent siltation from reaching storm drain systems and drainage ways. The erosion and sediment control (ESC) facilities shown on this plan are the minimum requirements for anticipated site conditions. During the construction period, these ESC facilities shall be upgraded as needed for unexpected storm events and to ensure that sediment laden water does not leave the site.
2. The following controls and practices are required:
   a) Each site shall have graveled or paved entrances, exits and parking areas, prior to beginning any other work, to reduce the tracking of sediment onto public or private roads.
   b) All unpaved roads located on-site shall be graveled. Other effective erosion and sediment control measures either on the road or down gradient may be used in place of graveling.
   c) When trucking saturated soils from the site, either water-tight trucks shall be used or loads shall be drained on-site until dripping has been reduced to minimize spillage on roads.
   d) Concrete trucks being washed out onsite shall be parked in a location that will prevent all wash water from entering the storm drain system without proper filtration. Concrete remnants and residue shall be properly disposed of.
3. Additional controls and practices shall be developed that are appropriate for the site. At a minimum the following shall be considered:
   a) Whenever practicable, clearing and grading shall be done in a phased manner to prevent exposed inactive areas from becoming a source of erosion
   b) In developing vegetative erosion control practices, at a minimum the following shall be considered; temporary seeding, permanent seeding, mulching, sod stabilization, vegetative buffer strips, and protection of trees with protective construction fences.
   c) The following shall be considered for the protection of exposed areas and the prevention of soil from being eroded by storm water; mulching with straw or other vegetation, use of erosion control blankets, and application of soil tackifiers.
   d) The following shall be considered for the diversion of flows from exposed soil, store flows to allow for sedimentation, filter flows, or otherwise reduce soil laden runoff; use of silt fences, earth dikes, brush barriers, drainage swales, check dams, subsurface drains, pipe slope drains, rock outlet protection, sediment traps, and temporary or permanent sedimentation basins. All temporary sediment control practices shall not be removed until permanent vegetation or other cover of exposed areas is established.
   e) The following shall be considered to prevent the stockpiles from becoming a source of erosion; diversion of uncontaminated flows around stockpiles, use of cover over stockpiles, and installation of silt fences around stockpiles.
4. The following maintenance activities shall be implemented:
   a) Significant amounts of sediment that leave the site shall be cleaned up within 24 hours and placed back on the site or properly disposed. Any in-stream clean up of sediment shall be performed according to Oregon Division of State Lands' required timeframe.
   b) Under no conditions shall sediment intentionally be washed into storm sewer or drainage way.
   c) For a filter fence, the trapped sediment shall be removed when it reaches one third of the above ground fence height.
   d) For catch basin protection, cleaning must occur when design capacity has been reduced by fifty percent.
   e) For a sediment basin, removal of trapped sediments shall occur when design capacity has been reduced by fifty percent.
   f) All erosion and sediment controls not in the direct path of work shall be installed before any land disturbance.
   g) If fertilizers are used to establish vegetation, the application rates shall follow manufacturer's guidelines and the application shall be done in such a way to minimize nutrient-laden runoff to receiving waters.
   h) If construction activities cease for thirty (30) days or more, the entire site must be stabilized, using vegetation of a heavy mulch layer, temporary seeding, or another method that does not require germination to control erosion.
   i) Any use of toxic or other hazardous materials shall include proper storage, application, and disposal.
   j) The permittee shall manage abandoned hazardous wastes, used oils, contaminated soils or other toxic substances discovered during construction activities in a manner approved by the Department of Environmental Quality.

Erosion and Sediment Control Inspection Requirements:
1. All sites 1 acre and greater shall have a person with knowledge and experience in construction storm water controls and management practices conduct all inspections. The inspector shall keep a written record of each inspection.
2. Active Sites: Frequency of inspections shall be daily during storm water runoff or snowmelt runoff and at least once every seven (7) calendar days and within 24 hours after any storm event of greater than 0.5 inches of rain per 24-hour period.
3. Inactive Sites: During inactive periods of greater than seven (7) consecutive calendar days, inspections shall only be required once every two (2) weeks. Prior to discontinuing activities at the site, any exposed area shall be stabilized to prevent erosion. Stabilization may occur by applying appropriate cover (mulch, erosion control blanket, soil tackifier, etc.) or establishing adequate vegetative cover.

Utilities:
1. If not noted on the plans utility information and crossing locations will have to be obtained from the utilities
2. Utility contacts are as follows: PGE – Service Coordinator, 503-736-5450; Comcast Cable – Jamie Stencil, 503-605-6000, QWest 503-242-6064, Northwest Natural Gas – Lance Cheeley 503-220-2357

Sediment Fence:
1. The filter fabric shall be purchased in a continuous roll cut to the length of the barrier to avoid use of joints. When joints are necessary, filter cloth shall be spliced together only at a support post, with a minimum 8 inch overlap, and both ends securely fastened to the post.
2. The filter fabric fence shall be installed to follow the contours, where feasible. Then fence posts shall be spaced a maximum of six feet apart and driven securely into the ground a minimum of 18 inches.
3. A trench shall be excavated, roughly 6 inches wide by 6 inches deep, downslope and adjacent to the wood post to allow the filter fabric to be buried. Bury the bottom of the fabric 6" vertically below finished grade. All areas of filter fabric trench shall be compacted.
4. The filter fabric shall be installed with stitched loops over fence posts. The fence post shall be constructed of 2" x 2" fir, pine, or steel. The fence post must be a minimum of 48" long. The filter fabric shall not be stapled or attached to existing trees.
5. Sediment fences shall be removed when they have served their useful purpose, but not before the upslope area has been permanently stabilized.
6. Sediment fences shall be inspected by applicant/contractor immediately after each rainfall, and at least daily during prolonged rainfall. Any required repairs shall be made immediately.

AS BUILT

REGISTERED PROFESSIONAL ENGINEER
OREGON
July 9, 2001
MARK P. MORRISON
12/14/06

REVISIONS	BY
REVISED PER CITY COMMENTS (9/07/05)	MM
AS-BUILT 12-14-2006	LD

ROSEMONT POINTE
RENAISSANCE DEVELOPMENT

Site Map and Notes

SISUL ENGINEERING
375 PORTLAND AVENUE
GLADSTONE, OREGON 97027
(503) 657-0188
DRAWING: 99-20NOTES.dwg

DATE	MAY 2005
SCALE	NOTED
DRAWN	MM
JOB	SGL 99-20A
SHEET	1 OF 17 SHEETS

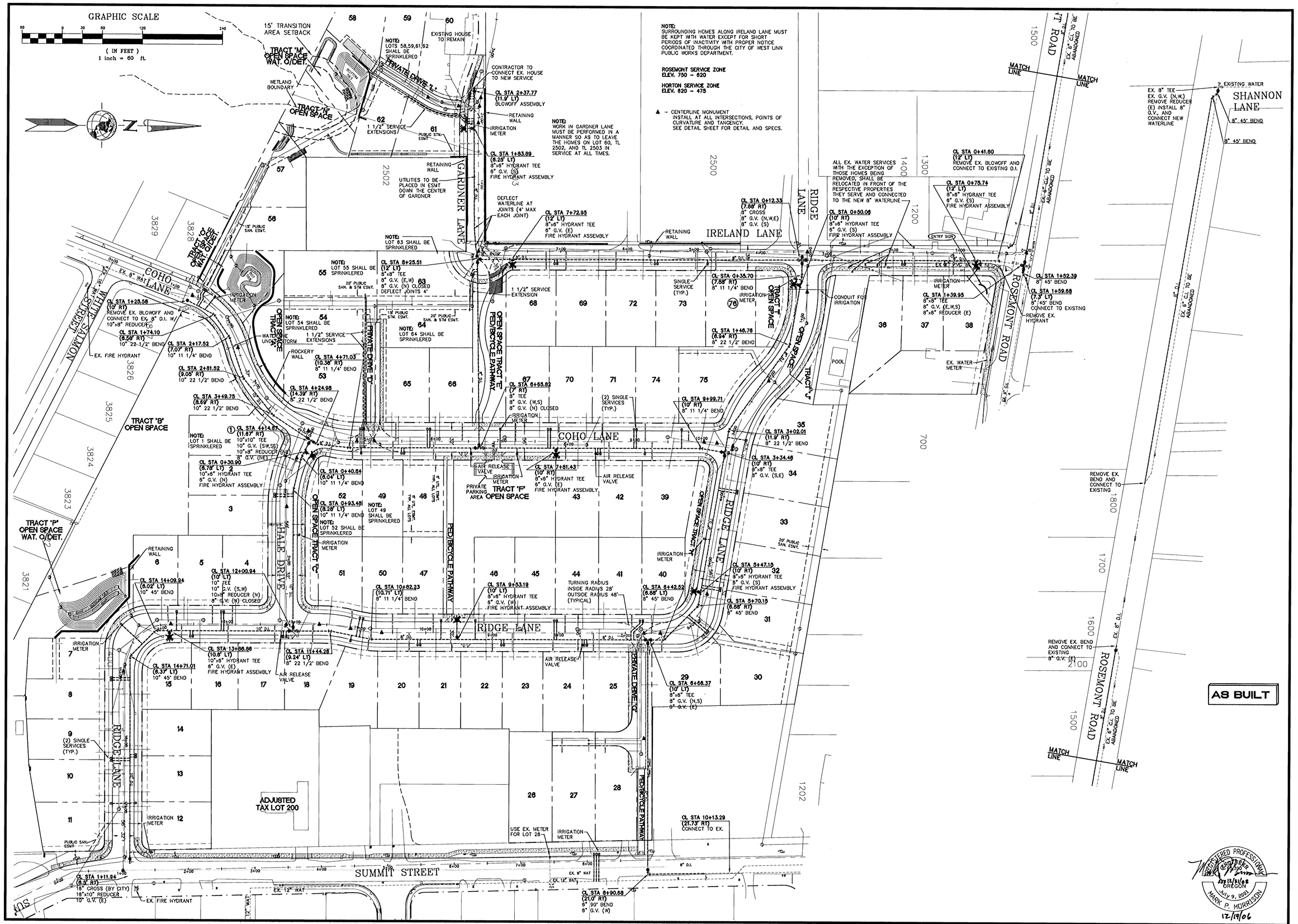

REVISIONS	BY
REVISED PER CITY COMMENTS (9/07/05)	NM
REVISED PER CITY COMMENTS 10/26/05	NM
UPDATED COMPLETE PLAN SET 4/06/06	NM
REVISED GARDNER V.L. 5/10/06	NM
AS-BUILT 12-14-2006	LD

ROSEMONT POINTE
RENAISSANCE DEVELOPMENT

Waterline Plan

SISUL ENGINEERING
375 PORTLAND AVENUE
GLADSTONE, OREGON 97027
(503) 657-0188
DRAWING: 99-20wat.dwg

REGISTERED PROFESSIONAL ENGINEER
OREGON JULY 9, 2001
MARK P. MORRISON
12/19/06

DATE	MAY 2005
SCALE	1"=60'
DRAWN	MM
JOB	SGL 99-20A
SHEET	2 OF 17 SHEETS

GRAPHIC SCALE

(IN FEET)
1 inch = 60 ft.

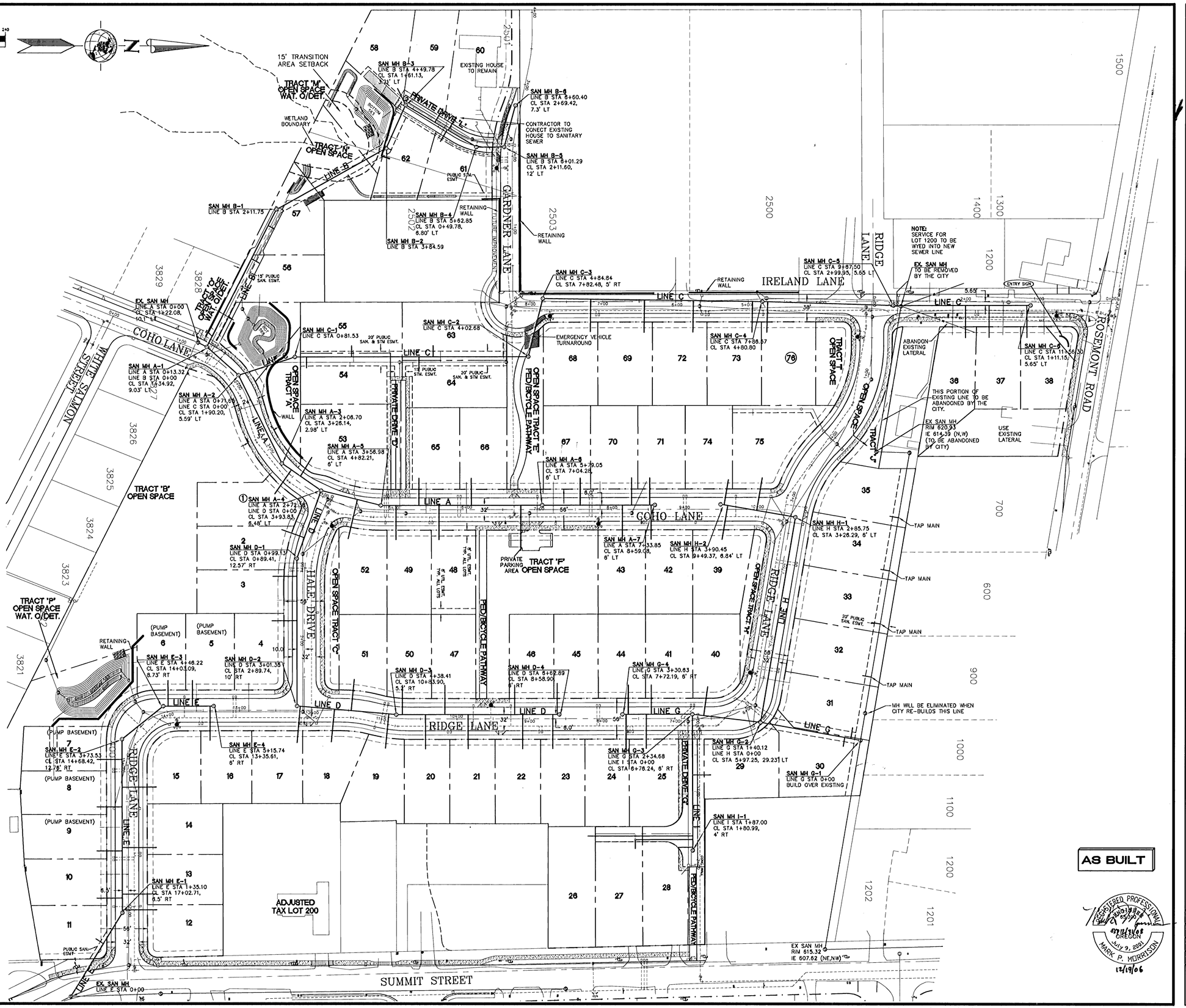

SANITARY SERVICE TABLE (4" PVC)

LOT #	LINE	LINE STA	LENGTH	SLOPE	IE @ END
1	A	2+22	40.0'	0.0200	580.82
2	D	0+69	33.0'	0.0200	583.42
3	D	1+23	33.0'	0.0200	583.95
4	D	1+84	35.0'	0.0200	584.27
5	E	5+00	35.0'	0.0200	589.84
6	E	4+53	35.0'	0.0200	589.55
7	E	3+48	35.0'	0.0200	588.62
8	E	2+81	39.0'	0.0200	588.28
9	E	2+20	35.0'	0.0200	587.98
10	E	1+55	35.0'	0.0200	587.61
11	E	0+85	12.0'	0.0200	586.58
12	E	1+39	47.0'	0.0200	587.77
13	E	1+61	47.0'	0.0200	587.88
14	E	2+25	47.0'	0.0200	588.22
15	E	3+08	47.0'	0.0200	588.66
16	E	5+24	47.0'	0.0200	590.21
17	D	3+08	51.5'	0.0800	590.38
18	D	3+53	45.0'	0.0800	598.64
19	D	4+28	45.0'	0.0200	611.29
20	D	4+79	45.0'	0.0200	612.54
21	D	5+37	45.0'	0.0500	614.18
22	D	6+12	45.0'	0.0500	614.56
23	D	6+68	45.0'	0.0500	614.83
24	G	3+28	45.0'	0.0500	624.22
25	G	2+98	45.0'	0.0200	620.58
26	I	1+87	145.0'	0.0800	627.01
27	I	1+72	91.0'	0.0800	622.71
28	I	1+82	30.0'	0.0400	616.68
29	I	0+83	25.0'	0.0200	615.46
30	G	0+22	12.0'	0.1000	613.48
31	G	0+14	15.0'	0.1000	613.87
32	EX.	10' OFF PL	12.0'	0.1000	609.27
33	EX.	10' OFF PL	12.0'	0.1000	609.94
34	EX.	10' OFF PL	12.0'	0.1000	610.62
35	EX.	10' OFF PL	12.0'	0.1000	611.29
36	C	10+87	44.0'	0.0200	621.31
37	C	10+99	44.0'	0.0200	622.93
38	C	11+51	44.0'	0.0200	625.74
39	H	3+81	47.0'	0.0200	616.98
40	G	2+19	40.0'	0.0800	617.44
41	G	2+91	40.0'	0.0200	619.91
42	A	7+29	47.0'	0.0200	624.86
43	A	6+90	47.0'	0.1000	619.39
44	G	3+23	35.0'	0.1000	625.22
45	D	6+60	40.0'	0.1000	616.56
46	D	6+02	40.0'	0.1000	616.26
47	D	5+05	40.0'	0.1000	615.77
48	A	4+37	47.0'	0.0500	608.91
49	A	3+78	47.0'	0.0200	604.44
50	D	4+47	40.0'	0.0200	612.28
51	D	3+76	43.0'	0.0800	602.77
52	A	3+24	55.0'	0.0800	598.83
53	A	2+38	30.0'	0.0200	581.31
54	C	0+98	15.0'	0.0200	582.37
55	C	1+59	15.0'	0.0200	585.90
56	B	1+38	12.0'	0.0200	558.33
57	B	1+88	12.0'	0.0200	560.68
58	B	4+49.78	25.0'	0.0200	568.74
59	B	4+96	20.0'	0.0200	574.30
60	B	5+18	22.0'	0.0200	577.04
61	B	5+16	20.0'	0.0200	576.75
62	B	3+84.59	10.0'	0.3000	567.40
63	C	2+72	15.0'	0.0200	592.38
64	C	2+52	20.0'	0.0200	591.38
65	A	4+09	37.0'	0.0200	605.84
66	A	4+81	37.0'	0.1000	613.18
67	A	6+31	37.0'	0.1000	609.44
68	C	5+51	47.0'	0.0200	599.58
69	C	6+25	47.0'	0.0200	601.97
70	A	7+02	37.0'	0.0200	615.47
71	A	7+27	37.0'	0.0200	624.66
72	C	6+92	47.0'	0.0200	604.14
73	C	7+73	47.0'	0.0200	606.78
74	H	3+88	37.0'	0.0200	615.67
75	H	3+47	45.0'	0.0200	616.76
76	C	7+94	42.0'	0.0200	607.76
TRACT F	A	5+50	62.0'	0.0200	621.34

REVISIONS	BY
REVISED PER CITY COMMENTS 10/26/05	MM
REVISED PER CITY COMMENTS 11/18/05	MM
REVISED LINE E, D, X, & A 12/23/05	MM
REVISED LINE E, D, G, H & I 02/02/06	MM
REVISED LINE E 3/20/06	MM
UPDATED COMPLETE PLAN SET 4/06/06	MM
REVISED LINE B 5/10/06	MM
AS-BUILT 12-14-2006	LD

ROSEMONT POINTE
RENAISSANCE DEVELOPMENT

Sanitary Sewer Plan

AS BUILT

REGISTERED PROFESSIONAL ENGINEER OREGON JULY 9, 2001 MARK P. MORRISON 12/19/06

SISUL ENGINEERING
375 PORTLAND AVENUE
GLADSTONE, OREGON 97027
(503) 657-0188

DRAWING 99-20asb.dwg

DATE	MAY 2005
SCALE	1"=60'
DRAWN	MM
JOB	SGL 99-20A
SHEET	3 OF 17 SHEETS

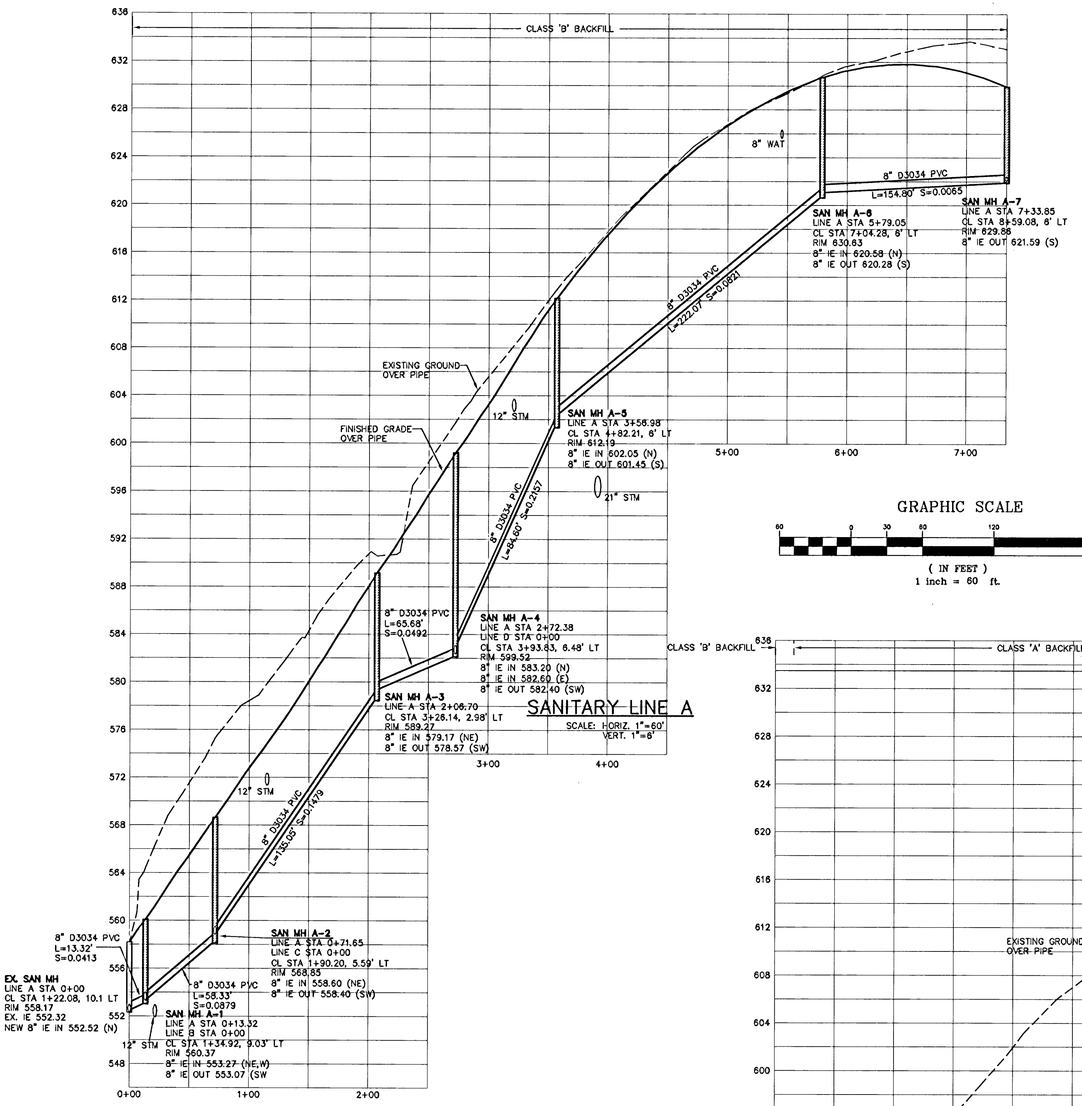

SANITARY LINE A

SCALE: HORIZ. 1"=60'
VERT. 1"=6'

GRAPHIC SCALE

60 0 30 60 120 240

(IN FEET)
1 inch = 60 ft.

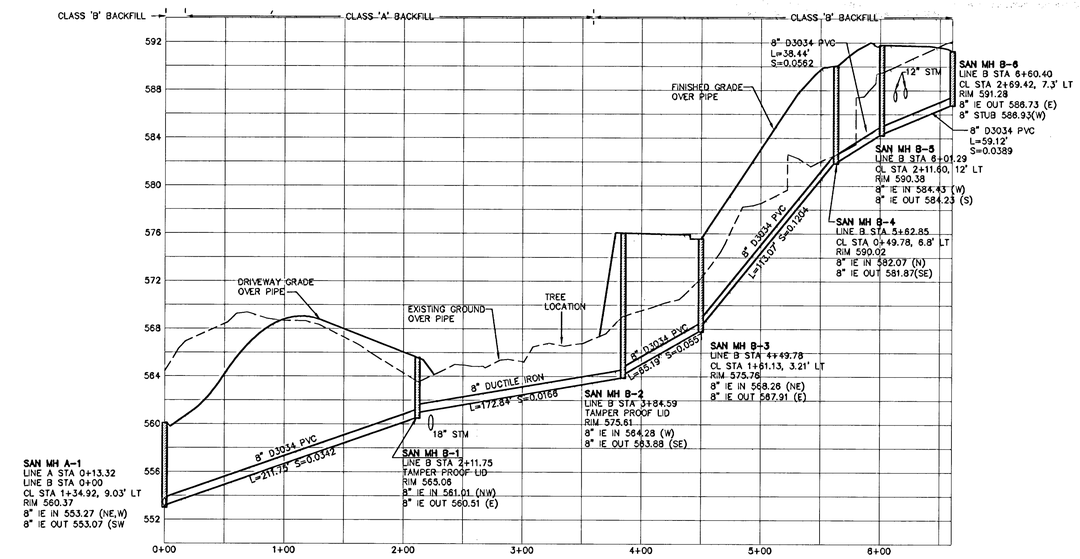

SANITARY LINE B

SCALE: HORIZ. 1"=60'
VERT. 1"=6'

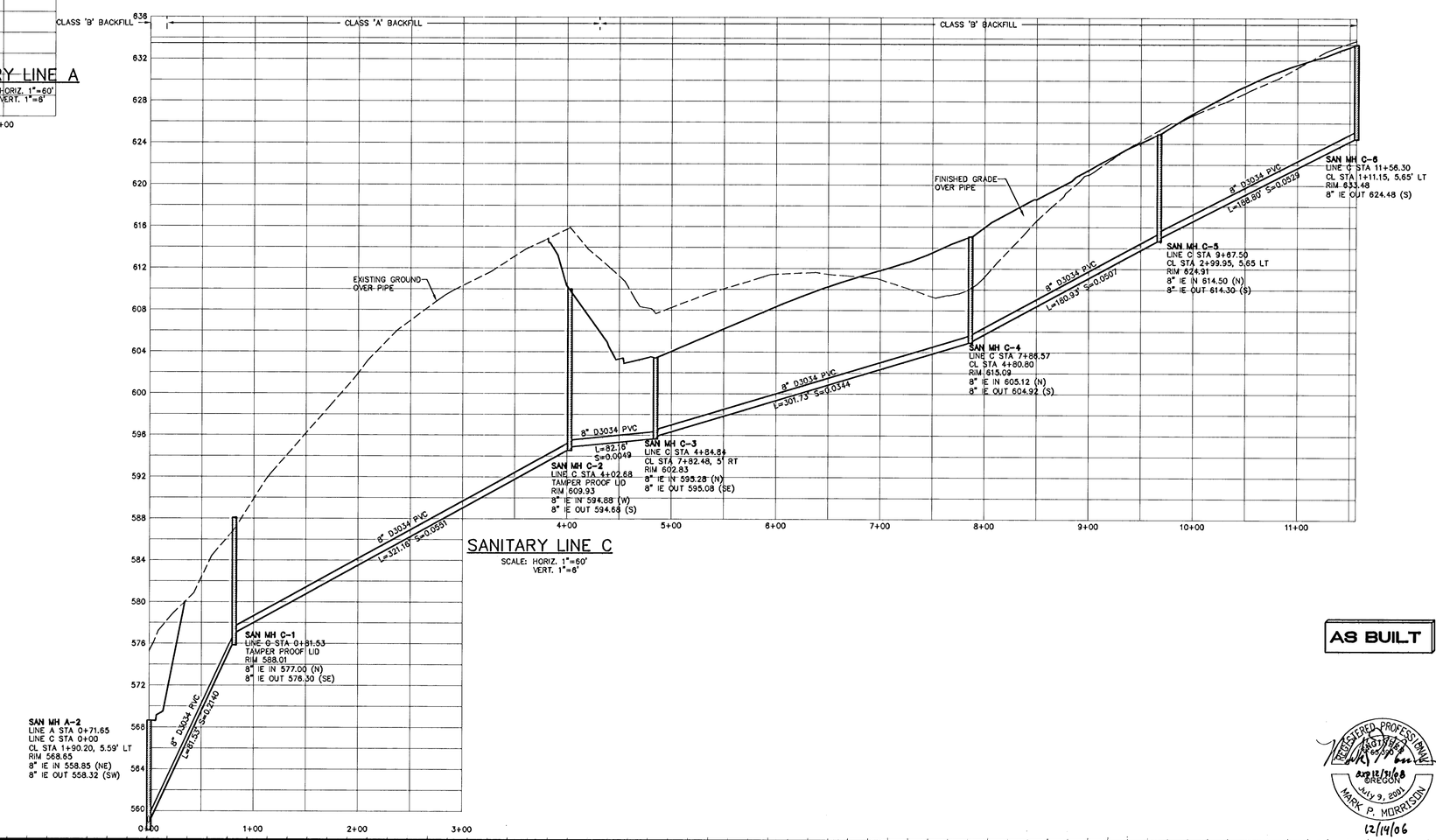

SANITARY LINE C

SCALE: HORIZ. 1"=60'
VERT. 1"=6'

AS BUILT

REGISTERED PROFESSIONAL ENGINEER
OREGON
JULY 9, 2001
MARK P. MORRISON
12/14/06

REVISIONS	BY
REVISED PER CITY COMMENTS 10/26/05	MM
REVISED PER CITY COMMENTS 11/18/05	MM
REVISED LINE E, D, X, & A 12/23/05	MM
UPDATED COMPLETE PLAN SET 4/06/06	MM
REVISED LINE B 5/10/06	MM
AS-BUILT 12-14-2006	LB

ROSEMONT POINTE
RENAISSANCE DEVELOPMENT

Sanitary Sewer Profiles

SISUL ENGINEERING
375 PORTLAND AVENUE
GLADSTONE, OREGON 97027
(503) 657-0188

DRAWING: 99-20san.dwg

DATE	MAY 2005
SCALE	1"=60'
DRAWN	MM
JOB	SGL 99-20A
SHEET	4
OF 17	SHEETS

GRAPHIC SCALE

60 0 30 60 120 240

(IN FEET)
1 inch = 60 ft.

AS BUILT

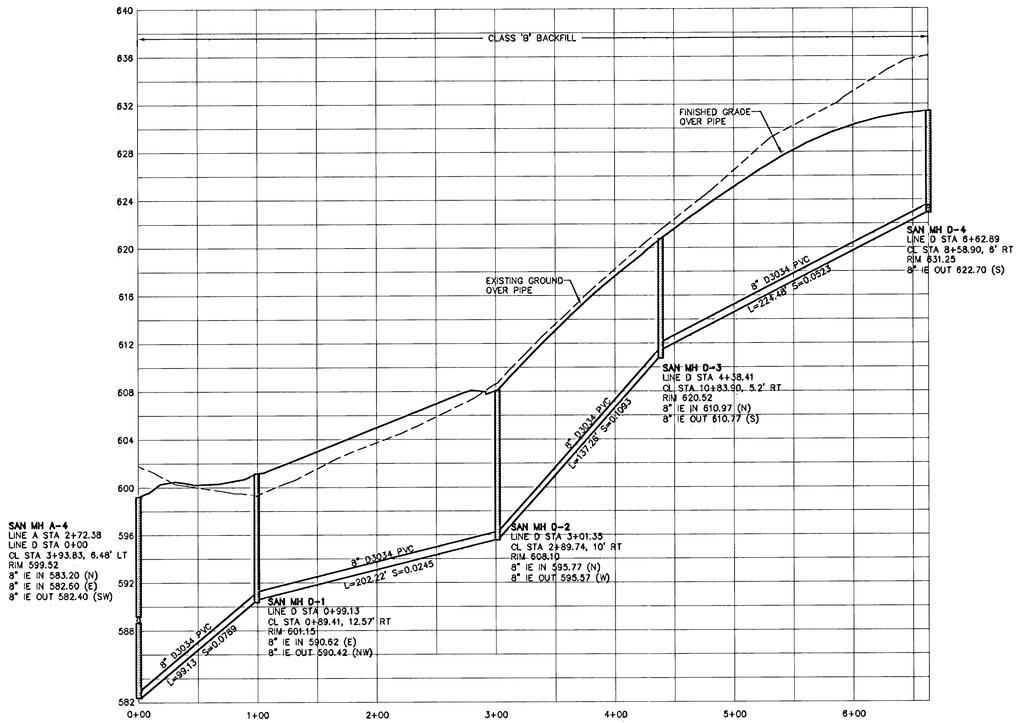

SANITARY LINE D

SCALE: HORIZ. 1"=60'

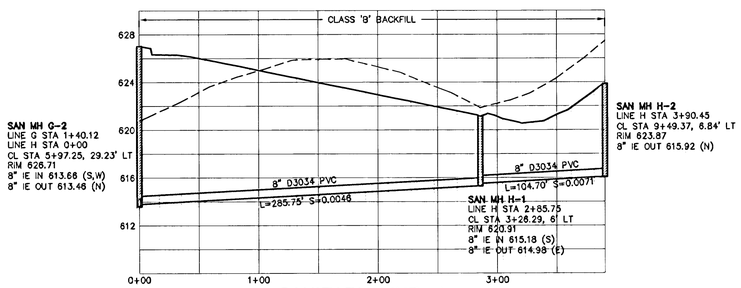

SANITARY LINE H

SCALE: HORIZ. 1"=60'
VERT. 1"=6'

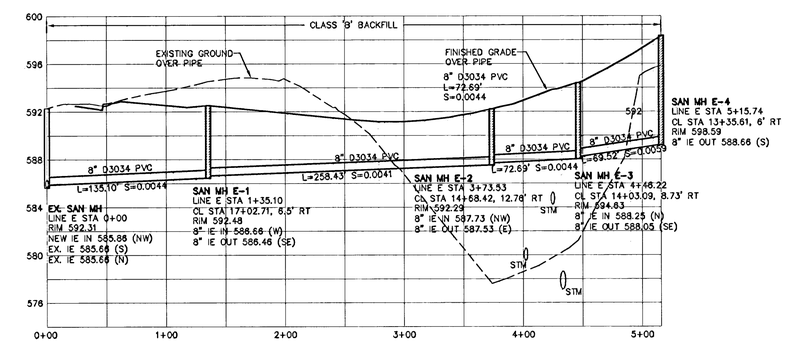

SANITARY LINE E

SCALE: HORIZ. 1"=60'
VERT. 1"=6'

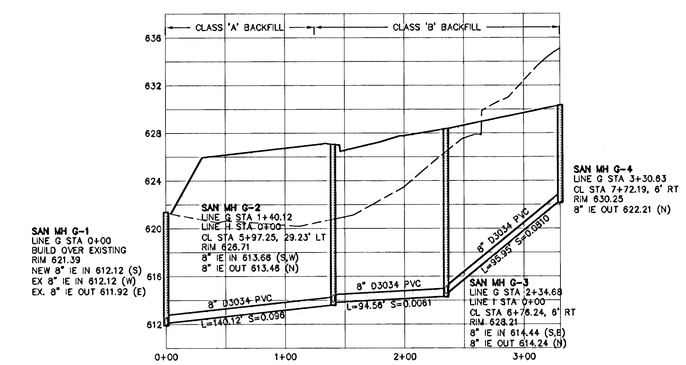

SANITARY LINE G

SCALE: HORIZ. 1"=60'
VERT. 1"=6'

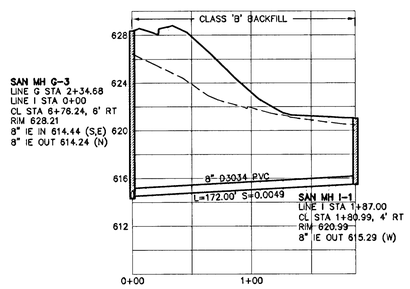

SANITARY LINE I

SCALE: HORIZ. 1"=60'
VERT. 1"=6'

REVISIONS	BY
REVISED PER CITY COMMENTS 10/26/05	MM
REVISED PER CITY COMMENTS 11/18/05	MM
REVISED LINE E, D, X, & A 12/23/05	MM
REVISED LINE E, D, G, H, & I 02/02/06	MM
REVISED LINE E 3/22/06	MM
UPDATED COMPLETE PLAN SET 4/06/06	MM
AS-BUILT 12-14-2006	LD

ROSEMONT POINTE
RENAISSANCE DEVELOPMENT

Sanitary Sewer Profiles

SISUL ENGINEERING
375 PORTLAND AVENUE
GLADSTONE, OREGON 97027
(503) 657-0188

DRAWING: 99-20scn.dwg

REGISTERED PROFESSIONAL ENGINEER
MARK P. MORRISON
OREGON
JULY 9, 1991
12/14/06

DATE	MAY 2005
SCALE	1"=60'
DRAWN	MM
JOB	SGL 99-20A
SHEET	5 OF 17 SHEETS

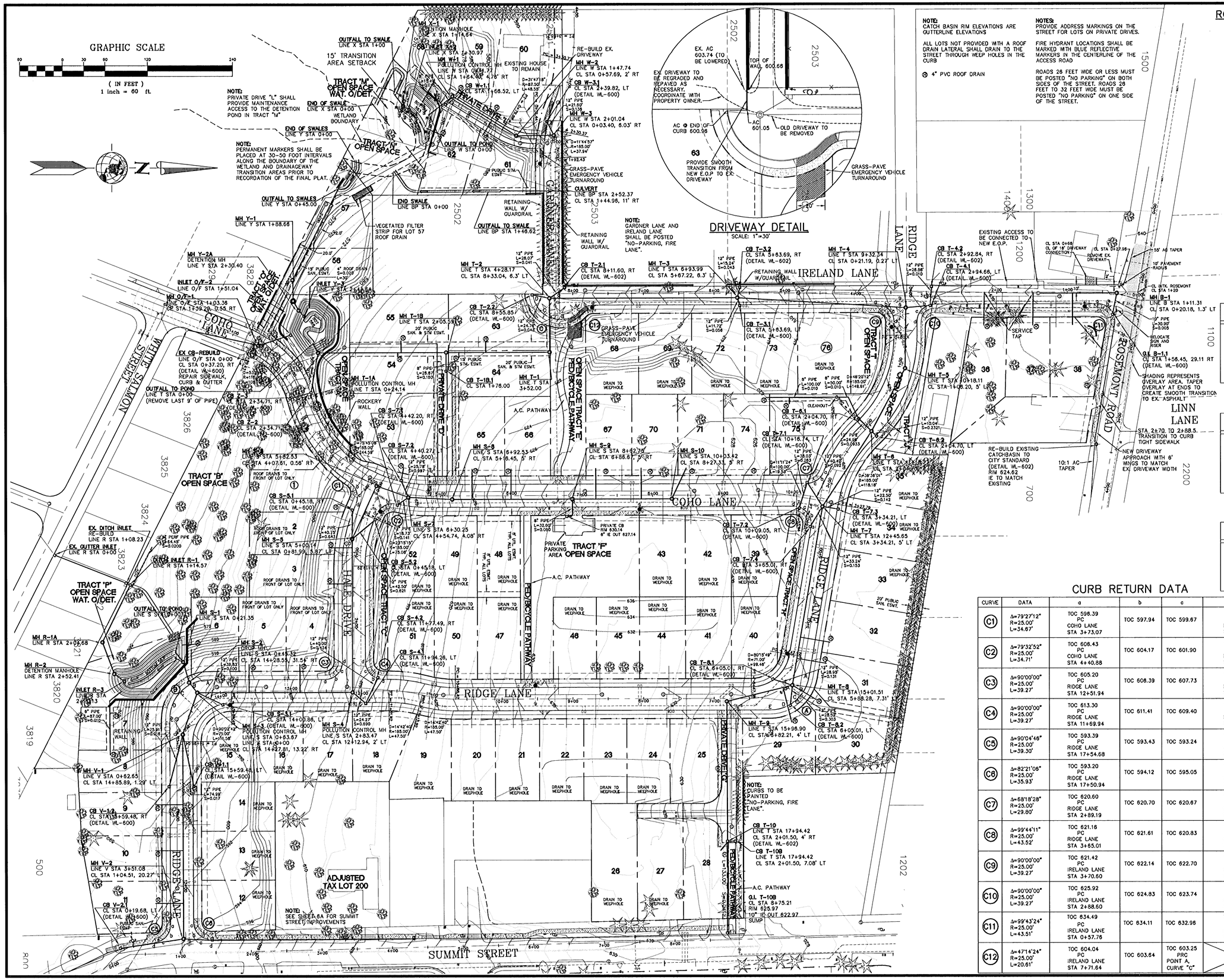

ROOF DRAIN LATERAL TABLE

LOT #	LENGTH	SLOPE
1	23.0'	0.020
2	34.0'	0.020
3	34.0'	0.020
4	40.0'	0.020
5	40.0'	0.020
6	24.0'	0.250
7	10.0'	0.050
8	SEE PLAN	
9	40.0'	0.020
10	40.0'	0.020
11	40.0'	0.020
25	25.0'	0.020
28	22.0'	0.020
29	51.0'	0.020
30	35.0'	0.020
31	35.0'	0.020
32	35.0'	0.020
36	40.0'	0.020
37	40.0'	0.020
38	27.0'	0.020
LLA	27.0'	0.020
53	20.0'	0.020
54	10.0'	0.020
55	15.0'	0.020
56	33.0'	0.020
58	35.0'	0.020
59	15.0'	0.020
60	15.0'	0.020
61	28.0'	0.020
62	21.0'	0.020
63	15.0'	0.050
64	10.0'	0.100
65	43.0'	0.100
66	43.0'	0.020
67	43.0'	0.020
70	43.0'	0.020
71	48.0'	0.020
74	SEE PLAN	
75	SEE PLAN	

Ⓐ CURVE DATA

Δ=80°15'49" R=55.00' L=77.05'

POINT	RADIUS	DELTA ANGLE FROM PRC	TC ELEV.
A	55'	0°00'00"	626.36
B	55'	20°03'57"	626.65
C	55'	40°07'54"	626.95
D	55'	60°11'52"	627.24
E	55'	80°15'49"	627.53

Ⓑ CURVE DATA

Δ=90°02'42" R=55.00' L=86.44'

POINT	RADIUS	DELTA ANGLE FROM PRC	TC ELEV.
A	55'	0°00'00"	594.76
B	55'	22°30'41"	595.72
C	55'	45°01'21"	594.68
D	55'	67°32'02"	593.65
E	55'	90°02'42"	592.61

Ⓒ CURVE DATA

Δ=133°03'28" R=38.00' L=88.25'

POINT	RADIUS	DELTA ANGLE FROM PRC	TC ELEV.
A	55'	0°00'00"	603.25
B	55'	44°21'09"	602.57
C	55'	88°42'18"	601.98
D	55'	133°03'28"	601.39

CURB RETURN DATA

CURVE	DATA	a	b	c	d
C1	Δ=79°27'12" R=25.00' L=34.67'	TOC 598.39 PC COHO LANE STA 3+73.07	TOC 597.94	TOC 599.67	TOC 600.55 PT HALE DRIVE STA 0+35.22
C2	Δ=79°33'52" R=25.00' L=34.71'	TOC 608.43 PC COHO LANE STA 4+40.88	TOC 604.17	TOC 601.90	TOC 600.57 PT HALE DRIVE STA 0+33.18
C3	Δ=90°00'00" R=25.00' L=39.27'	TOC 605.20 PC RIDGE LANE STA 12+51.94	TOC 608.39	TOC 607.73	TOC 607.96 PT HALE DRIVE STA 2+54.74
C4	Δ=90°00'00" R=25.00' L=39.27'	TOC 613.30 PC RIDGE LANE STA 11+69.94	TOC 611.41	TOC 609.40	TOC 607.96 PT HALE DRIVE STA 2+54.74
C5	Δ=90°04'46" R=25.00' L=39.30'	TOC 593.39 PC RIDGE LANE STA 17+54.68	TOC 593.43	TOC 593.24	TOC 593.17 PT SUMMIT STREET STA 0+64.74
C6	Δ=82°21'06" R=25.00' L=35.93'	TOC 593.20 PC RIDGE LANE STA 17+50.94	TOC 594.12	TOC 595.05	TOC 596.01 PT SUMMIT STREET STA 1+43.00
C7	Δ=68°18'28" R=25.00' L=29.80'	TOC 620.60 PC RIDGE LANE STA 2+89.19	TOC 620.70	TOC 620.67	TOC 620.63 PT COHO DRIVE STA 10+16.64
C8	Δ=99°44'11" R=25.00' L=43.52'	TOC 621.16 PC RIDGE LANE STA 3+65.01	TOC 621.61	TOC 620.83	TOC 620.83 PT COHO DRIVE STA 9+99.71
C9	Δ=90°00'00" R=25.00' L=39.27'	TOC 621.42 PC IRELAND LANE STA 3+70.60	TOC 622.14	TOC 622.70	TOC 622.65 PT RIDGE LANE STA 0+41.00
C10	Δ=90°00'00" R=25.00' L=39.27'	TOC 625.92 PC IRELAND LANE STA 2+88.60	TOC 624.83	TOC 623.74	TOC 622.65 PT RIDGE LANE STA 0+41.00
C11	Δ=99°43'24" R=25.00' L=43.51'	TOC 634.49 PC IRELAND LANE STA 0+57.76	TOC 634.11	TOC 632.98	TOC 631.93 PT ROSEMONT ROAD STA 1+70.16
C12	Δ=47°14'24" R=25.00' L=20.61'	TOC 604.04 PC IRELAND LANE STA 7+71.64	TOC 603.64	TOC 603.25 PRC POINT A, CURVE "C"	

AS BUILT

REVISIONS	BY
REVISED PER CITY COMMENTS 10/26/05	
REVISED PER CITY COMMENTS 11/18/05	MM
REVISED RIDGE PROFILE 2/02/06	MM
SHIFTED STM AWAY FROM SAN 3/02/06	MM
UPDATED COMPLETE PLAN SET 4/06/06	MM
REVISED POND & TRACT G (5/10/06)	MM
REVISED POND & TRACT D (6/30/06)	MM
AS-BUILT 12-14-2006	LD

ROSEMONT POINTE
RENAISSANCE DEVELOPMENT

Street and Storm Drain Plan

SISUL ENGINEERING
375 PORTLAND AVENUE
GLADSTONE, OREGON 97027
(503) 657-0188

DRAWING: 99-20A.DWG

REGISTERED PROFESSIONAL ENGINEER
OREGON
JULY 9, 2001
MARK P. MORRISON
12/14/06

DATE	MAY 2005
SCALE	1"=60'
DRAWN	MM
JOB	SGL 99-20A
SHEET	6
OF	17 SHEETS

GRAPHIC SCALE

50 0 30 60 120 240

(IN FEET)
1 inch = 60 ft.

SUMMIT STREET IMPROVEMENT WIDTH

CL STATION	DIST. FROM R.O.W. CL TO CURB FACE
0+00	16.20'
0+50	14.14'
1+50	17.91'
2+00	16.92'
2+50	15.93'
3+00	14.93'
3+50	13.94'
4+00	12.95'
4+50	11.95'
5+00	10.98'
5+50	9.97'
6+00	8.97'
6+50	8.50'
7+00	8.32'
7+50	8.14'
8+00	7.96'
8+50	7.78'
8+97.65	7.61'

CURB RETURN DATA

CURVE	DATA	a	b	c	d
C5	Δ=90°04'46" R=25.00' L=39.30'	TOC 593.39 PC RIDGE LANE STA 17+54.68	TOC 593.43	TOC 593.24	TOC 593.17 PT SUMMIT STREET STA 0+64.74
C6	Δ=82°21'06" R=25.00' L=35.93'	TOC 593.20 PC RIDGE LANE STA 17+50.94	TOC 594.12	TOC 595.05	TOC 596.01 PT SUMMIT STREET STA 1+43.50

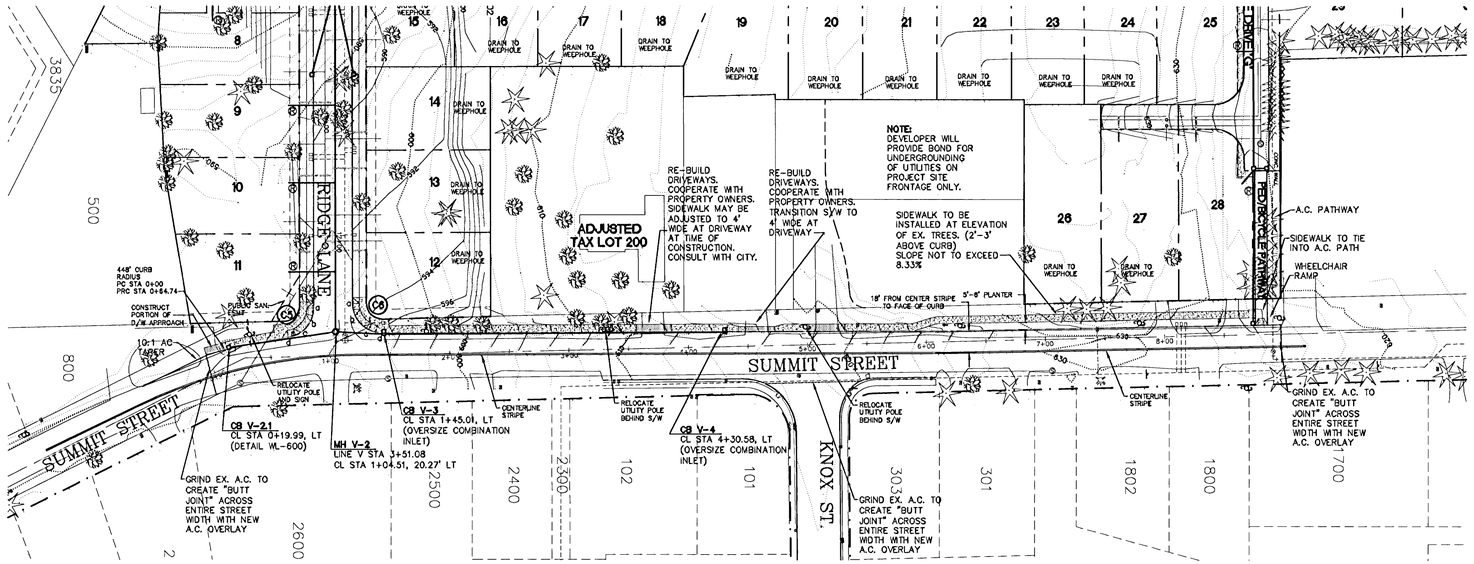

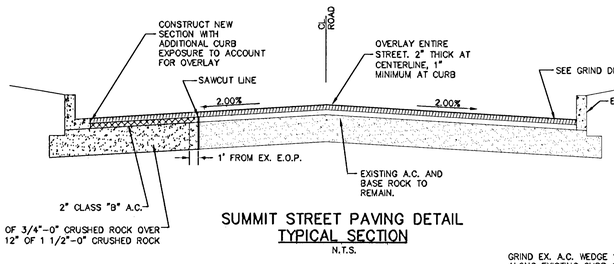

SUMMIT STREET PAVING DETAIL
TYPICAL SECTION
N.T.S.

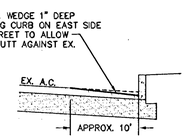

GRIND DETAIL
N.T.S.

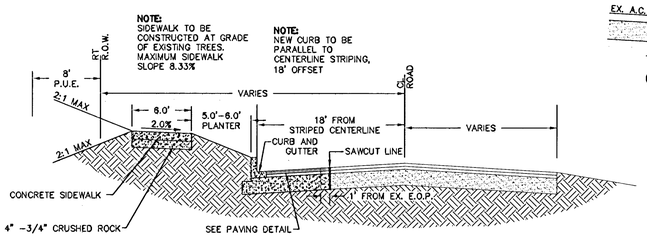

SUMMIT STREET STA 6+00 – 8+97.65
TYPICAL SECTION
N.T.S.

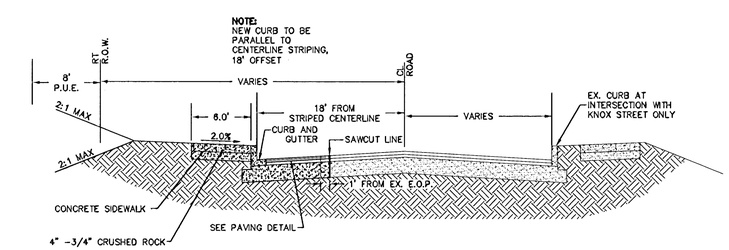

SUMMIT STREET STA 0+00 – 6+00
TYPICAL SECTION
N.T.S.

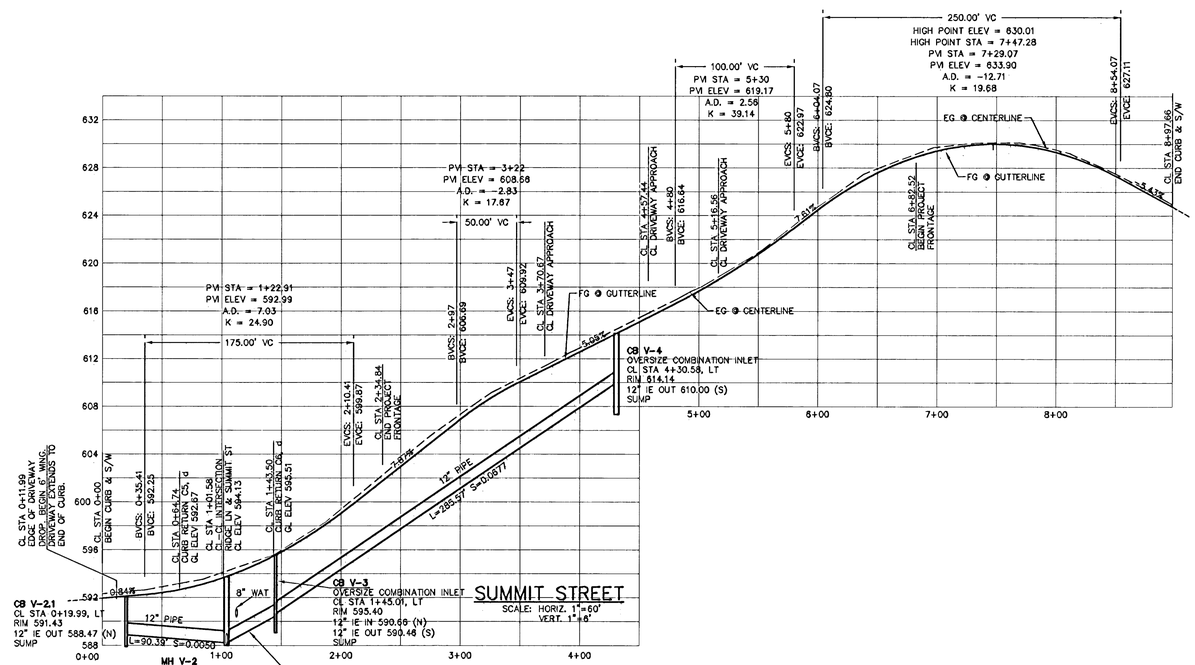

AS BUILT

REGISTERED PROFESSIONAL ENGINEER
OREGON
JULY 9, 2003
MARK P. MORRISON
12/14/06

REVISIONS	BY
UPDATED COMPLETE PLAN SET 4/06/06	MM
AS-BUILT 12-14-2006	LD

ROSEMONT POINTE
RENAISSANCE DEVELOPMENT

Summit Street Improvements

SISUL ENGINEERING
375 PORTLAND AVENUE
GLADSTONE, OREGON 97027
(503) 657-0188

DRAWING:99-20summit improvements.dwg

DATE	MAY 2005
SCALE	1"=60'
DRAWN	MM
JOB	SGL 99-20A
SHEET	6A
OF 17	SHEETS

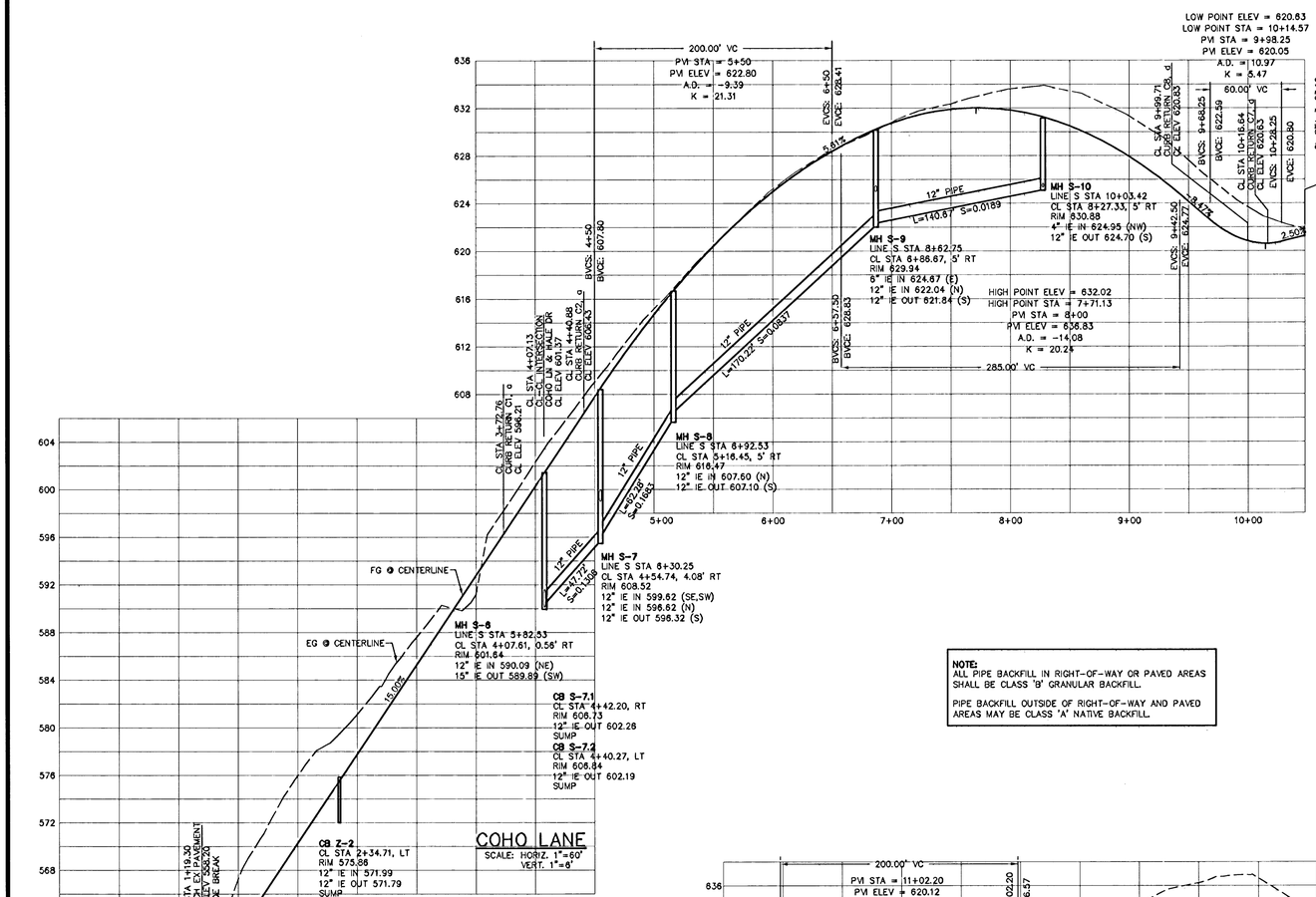

COHO LANE

SCALE: HORIZ. 1"=60'
VERT. 1"=6'

CB Z-2
CL STA 2+34.71, LT
RIM 575.88
12" IE IN 571.99
12" IE OUT 571.79
SUMP

CB Z-3
CL STA 2+34.71, RT
RIM 575.52
12" IE OUT 572.14
SUMP

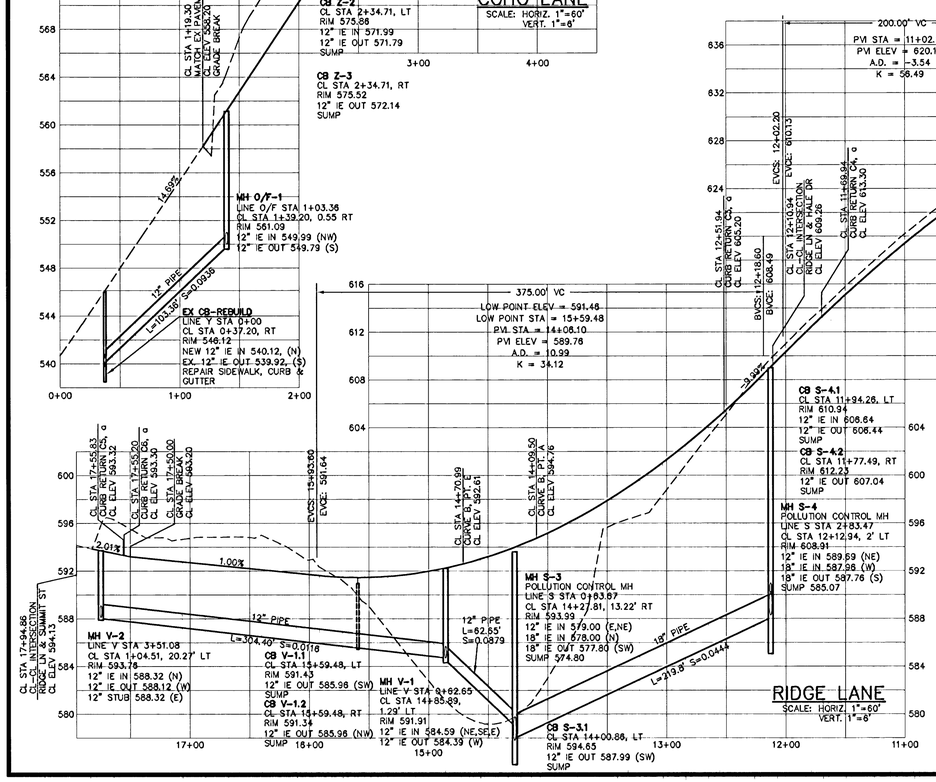

RIDGE LANE

SCALE: HORIZ. 1"=60'
VERT. 1"=6'

NOTE:
ALL PIPE BACKFILL IN RIGHT-OF-WAY OR PAVED AREAS SHALL BE CLASS 'B' GRANULAR BACKFILL.

PIPE BACKFILL OUTSIDE OF RIGHT-OF-WAY AND PAVED AREAS MAY BE CLASS 'A' NATIVE BACKFILL.

GRAPHIC SCALE

50 0 30 60 120 240

(IN FEET)
1 inch = 60 ft.

AS BUILT

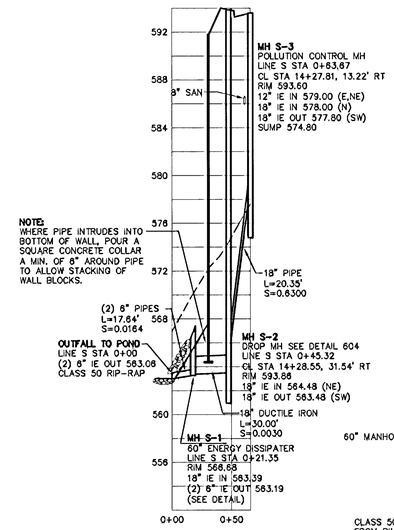

STORM LINE S

SCALE: HORIZ. 1"=60'
VERT. 1"=6'

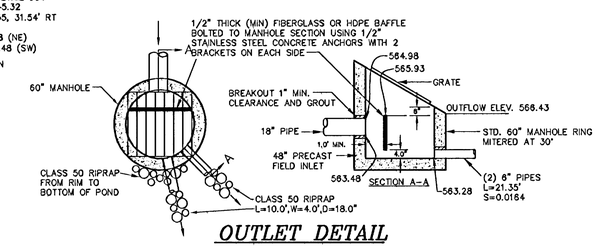

OUTLET DETAIL
ENERGY DISSIPATER MH S-1

NTS

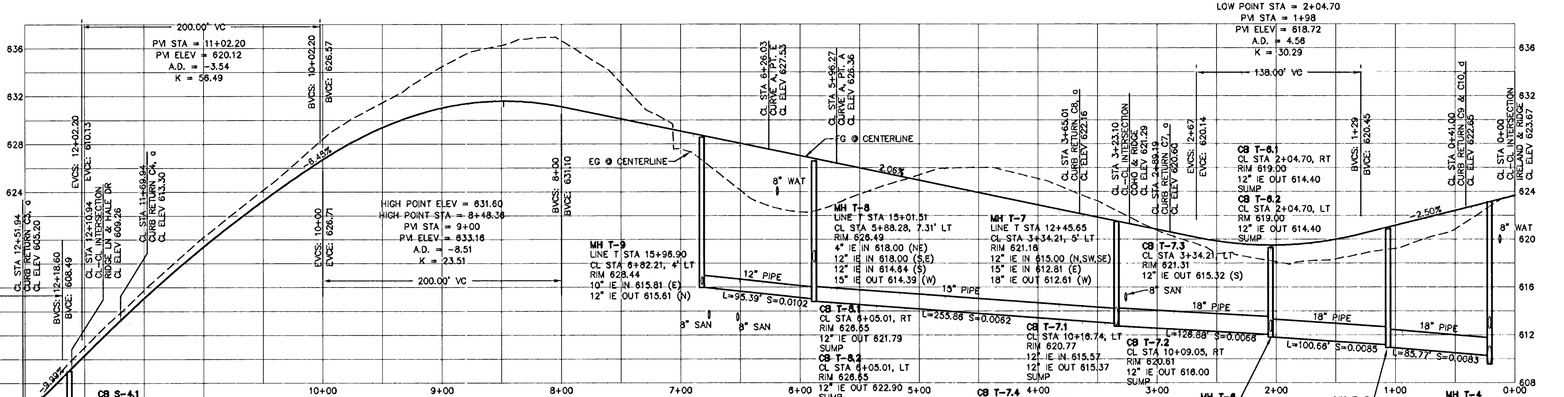

REVISIONS	BY
REVISED PER CITY COMMENTS 10/26/05	MM
REVISED PER CITY COMMENTS 11/18/05	MM
REVISED RIDGE PROFILE 2/02/06	MM
SHIFTED STM AWAY FROM SAN 3/30/06	MM
UPDATED COMPLETE PLAN SET 4/06/06	MM
AS-BUILT 12-14-2006	LD

ROSEMONT POINTE
RENAISSANCE DEVELOPMENT

Street and Storm Drain Profiles

SISUL ENGINEERING
375 PORTLAND AVENUE
GLADSTONE, OREGON 97027
(503) 657-0188

DRAWING: 99-20sts.dwg

REGISTERED PROFESSIONAL ENGINEER
OREGON
JULY 9, 2001
MARK P. MORRISON
EXP. 12/31/06
12/14/06

DATE	MAY 2005
SCALE	1"=60'
DRAWN	MM
JOB	SGL 99-20A
SHEET	7
OF	17 SHEETS

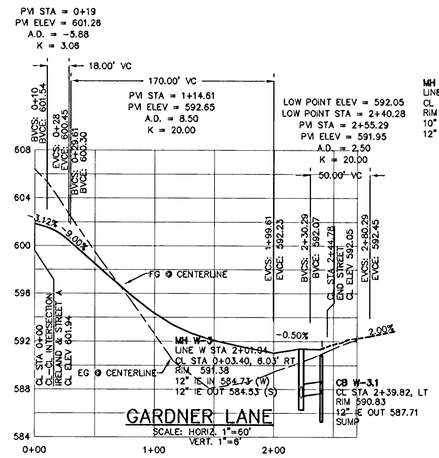

GARDNER LANE

SCALE: HORIZ. 1"=60'
VERT. 1"=6'

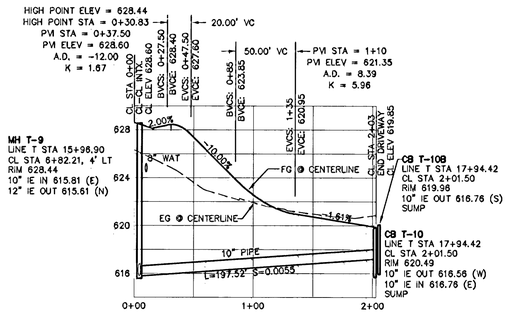

PRIVATE DRIVEWAY "G"

SCALE: HORIZ. 1"=60'
VERT. 1"=6'

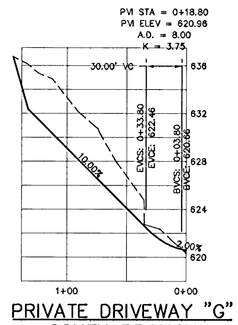

PRIVATE DRIVEWAY "G" SOUTH BRANCH

SCALE: HORIZ. 1"=60'
VERT. 1"=6'

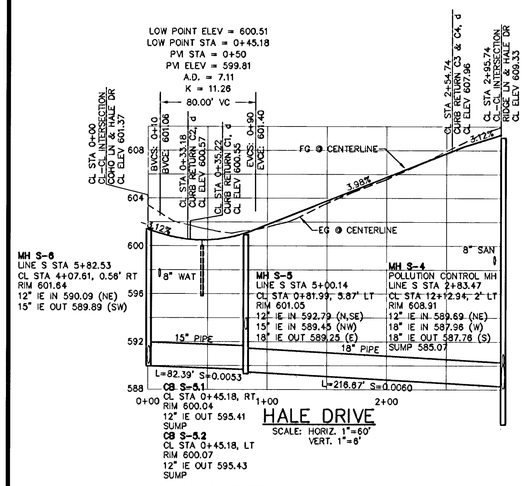

HALE DRIVE

SCALE: HORIZ. 1"=60'
VERT. 1"=6'

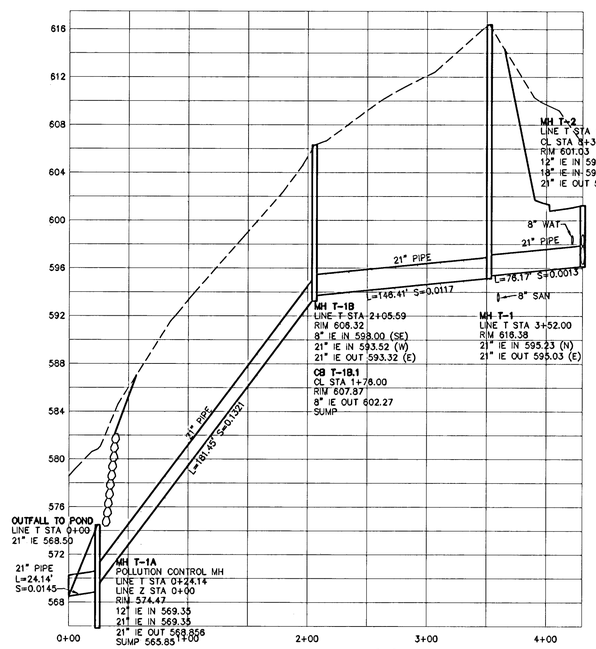

STORM LINE 'T'

SCALE: HORIZ. 1"=60'
VERT. 1"=6'

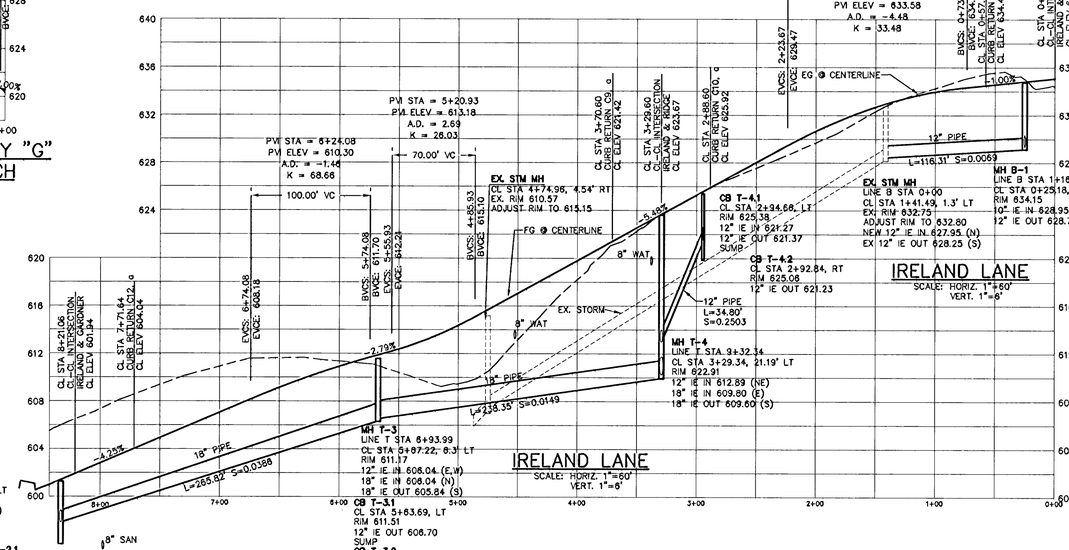

IRELAND LANE

SCALE: HORIZ. 1"=60'
VERT. 1"=6'

PRIVATE DRIVEWAY "D"

SCALE: HORIZ. 1"=60'
VERT. 1"=6'

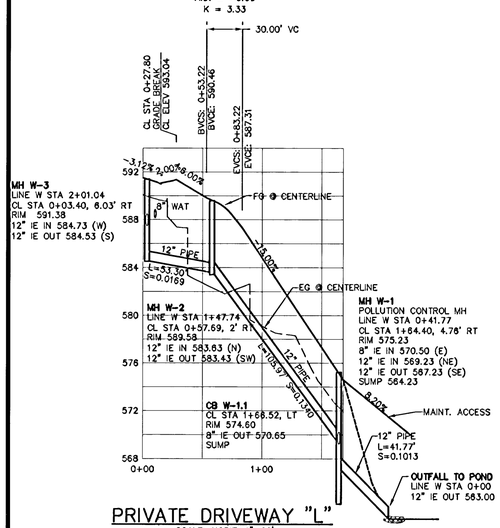

PRIVATE DRIVEWAY "L"

SCALE: HORIZ. 1"=60'
VERT. 1"=6'

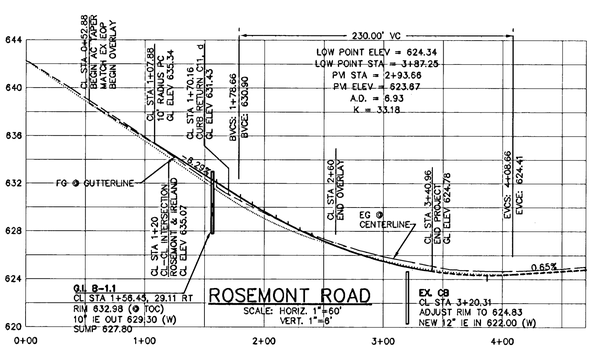

ROSEMONT ROAD

SCALE: HORIZ. 1"=60'
VERT. 1"=6'

NOTE:
ALL PIPE BACKFILL IN RIGHT-OF-WAY OR PAVED AREAS SHALL BE CLASS 'B' GRANULAR BACKFILL.

PIPE BACKFILL OUTSIDE OF RIGHT-OF-WAY AND PAVED AREAS MAY BE CLASS 'A' NATIVE BACKFILL.

GRAPHIC SCALE

60 0 30 60 120 240

(IN FEET)
1 inch = 60 ft.

AS BUILT

REGISTERED PROFESSIONAL ENGINEER
OREGON
MARK P. MORRISON
EXPIRES 12/31/08
12/14/06

REVISIONS	BY
REVISED PER CITY COMMENTS 10/26/05	MM
REVISED PER CITY COMMENTS 11/18/05	MM
SHIFTED STM AWAY FROM SAN 3/02/06	MM
UPDATED COMPLETE PLAN SET 4/06/06	MM
REVISED TRACT G 3/10/06	MM
AS-BUILT 12-14-2006	LD

ROSEMONT POINTE
RENAISSANCE DEVELOPMENT

Street and Storm Drain Profiles

SISUL ENGINEERING
375 PORTLAND AVENUE
GLADSTONE, OREGON 97027
(503) 657-0188

DRAWING:99-20sts.dwg

DATE	MAY 2005
SCALE	1"=60'
DRAWN	MM
JOB	SGL 99-20A
SHEET	8
OF 17	SHEETS

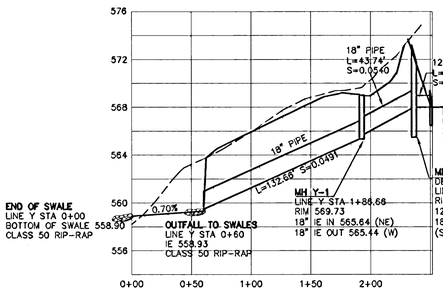

STORM LINE Y

SCALE: HORIZ. 1"=60'
VERT. 1"=6'

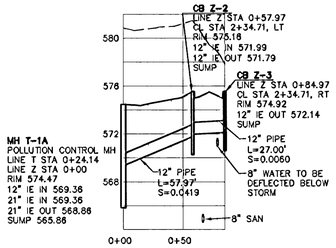

STORM LINE Z

SCALE: HORIZ. 1"=60'
VERT. 1"=6'

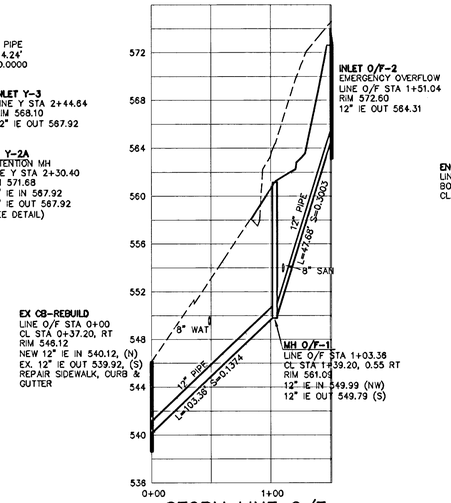

STORM LINE O/F

SCALE: HORIZ. 1"=60'
VERT. 1"=6'

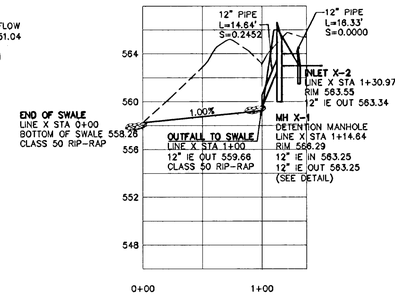

STORM LINE X

SCALE: HORIZ. 1"=60'
VERT. 1"=6'

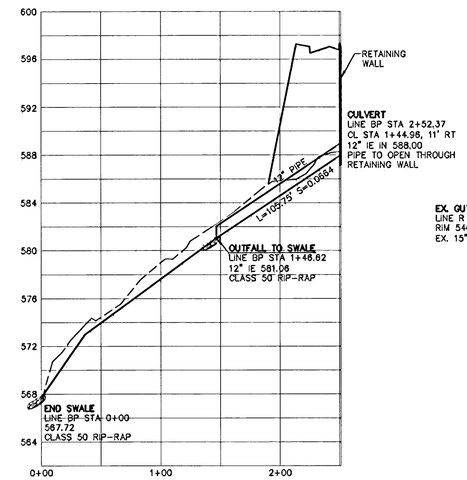

STORM LINE BP

SCALE: HORIZ. 1"=60'
VERT. 1"=6'

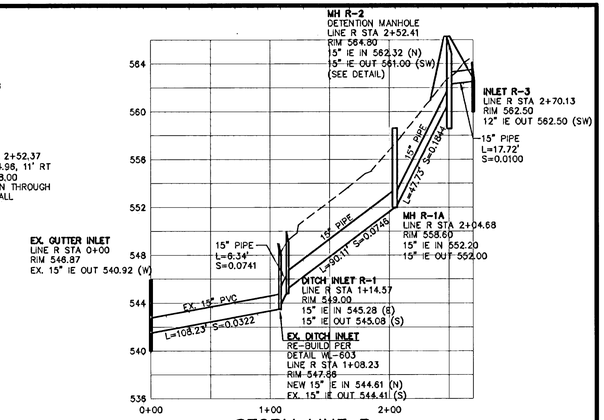

STORM LINE R

SCALE: HORIZ. 1"=60'
VERT. 1"=6'

NOTE:
ALL PIPE BACKFILL IN RIGHT-OF-WAY OR PAVED AREAS SHALL BE CLASS 'B' GRANULAR BACKFILL.

PIPE BACKFILL OUTSIDE OF RIGHT-OF-WAY AND PAVED AREAS MAY BE CLASS 'A' NATIVE BACKFILL.

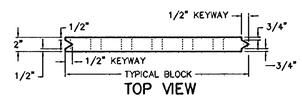

TOP VIEW

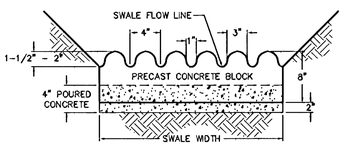

FRONT VIEW

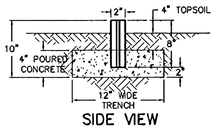

SIDE VIEW

CONCRETE SPREADER DETAIL

N.T.S.

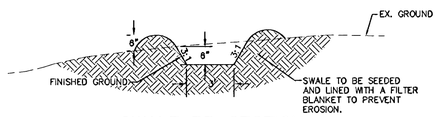

SWALE BP SECTION

N.T.S.

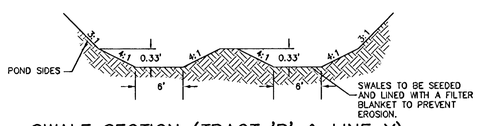

SWALE SECTION (TRACT 'P' & LINE Y)

N.T.S.

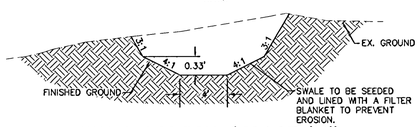

SWALE SECTION (TRACT 'M')

N.T.S.

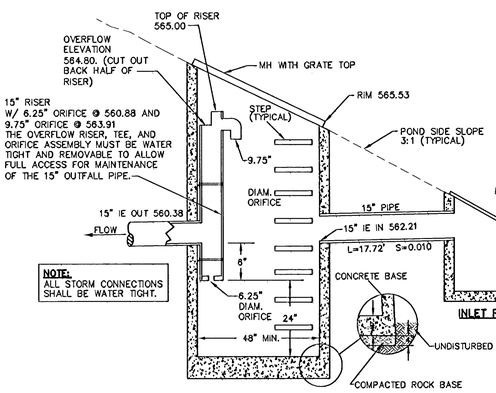

MANHOLE R-2

(NTS)

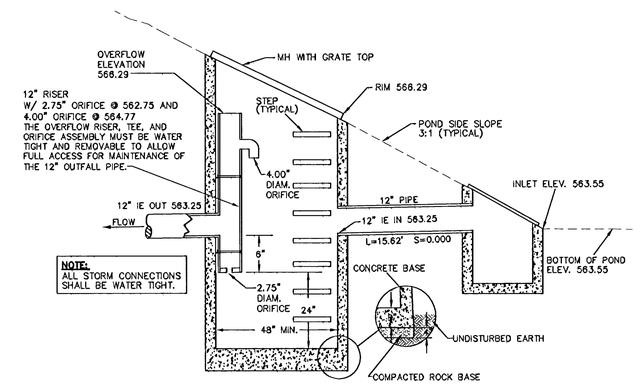

MANHOLE X-1

(NTS)

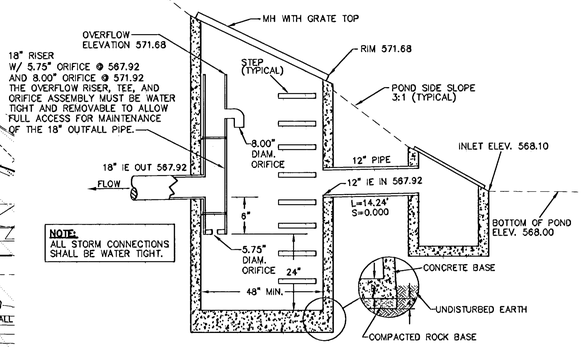

MANHOLE Y-2A

(NTS)

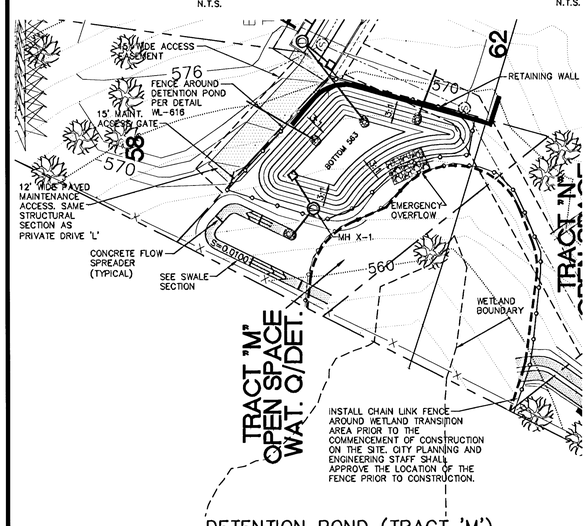

DETENTION POND (TRACT 'M')

SCALE: 1"=30'

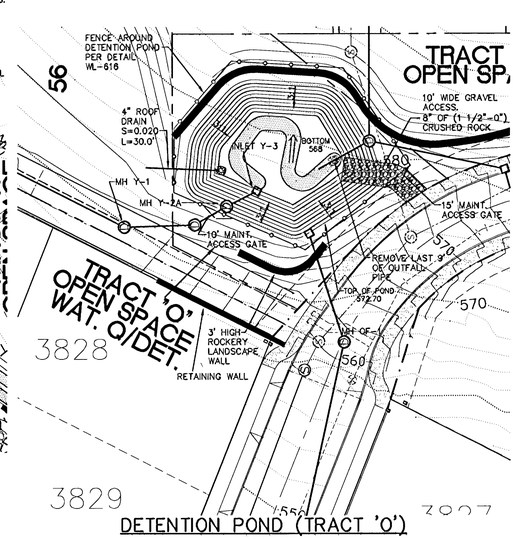

DETENTION POND (TRACT 'O')

SCALE: 1"=30'

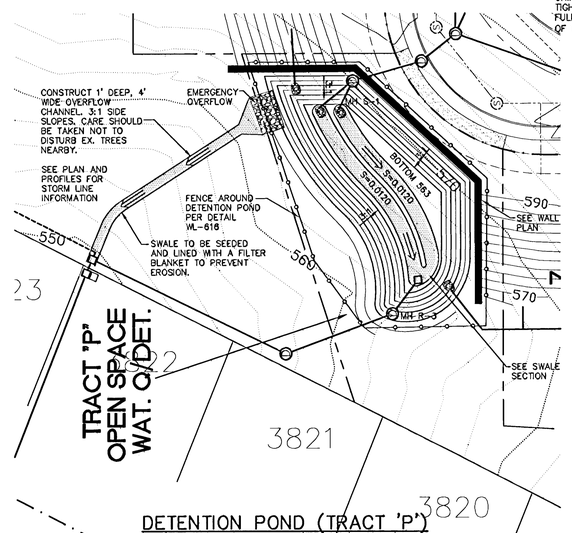

DETENTION POND (TRACT 'P')

SCALE: 1"=30'

AS BUILT

GRAPHIC SCALE

50 0 30 60 120 240

(IN FEET)
1 inch = 60 ft.

REGISTERED PROFESSIONAL ENGINEER
OREGON
JULY 9, 2001
MARK P. MORRISON
12/19/06

REVISIONS	BY
REVISED PER CITY COMMENTS 10/26/05	MM
REVISED PER CITY COMMENTS 11/18/05	MM
SHIFTED STM AWAY FROM SAN 3/02/06	MM
UPDATED COMPLETE PLAN SET 4/06/06	MM
REVISED POND TRACT N 5/10/06	MM
REVISED POND @ TRACT O 6/30/06	MM
AS-BUILT 12-14-2006	LD

ROSEMONT POINTE
RENAISSANCE DEVELOPMENT

Street and Storm Drain Profiles & Details

SISUL ENGINEERING
375 PORTLAND AVENUE
GLADSTONE, OREGON 97027
(503) 657-0188

DRAWING: 99-20ST8.DWG

DATE	MAY 2005
SCALE	1"=60'
DRAWN	MM
JOB	SGL 99-20A
SHEET	9
OF 17	SHEETS

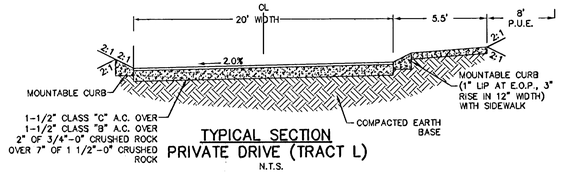

TYPICAL SECTION
PRIVATE DRIVE (TRACT L)
N.T.S.

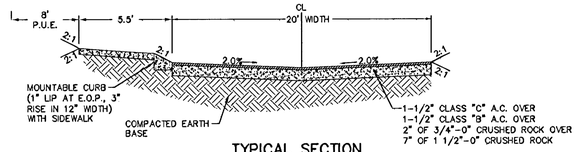

TYPICAL SECTION
PRIVATE DRIVES (TRACT D & TRACT G)
N.T.S.

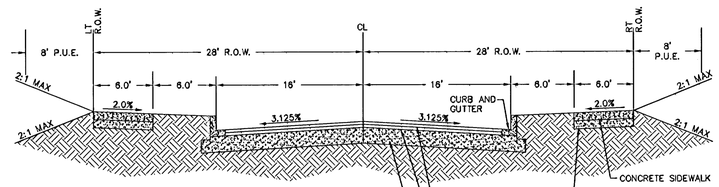

COHO LANE (STA 4+00 - 10+47.85),
RIDGE LANE, & HALE DRIVE
TYPICAL SECTION
N.T.S.

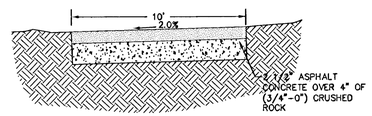

PATHWAY DETAIL
N.T.S.

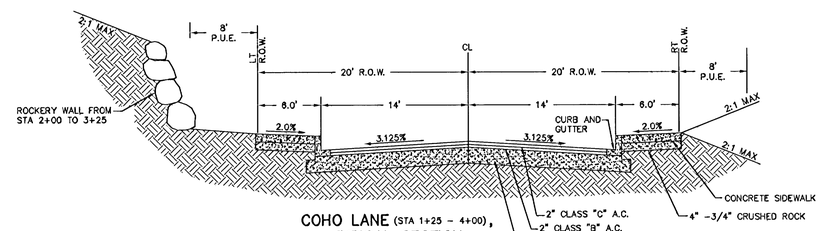

COHO LANE (STA 1+25 - 4+00),
TYPICAL SECTION
N.T.S.

SUMMIT STREET
IMPROVEMENT WIDTH

CL STATION	DIST. FROM R.O.W. CL TO CURB FACE
0+00	13.00'
0+50	15.05'
1+50	13.69'
2+00	13.01'
2+50	12.33'
3+00	11.65'
3+50	10.97'
4+00	10.29'
4+50	9.61'
5+00	8.93'
5+50	8.25'
6+00	7.57'
6+50	6.90'
7+00	6.22'
7+50	5.54'
8+00	4.88'
8+50	4.18'
8+97.65	3.53'

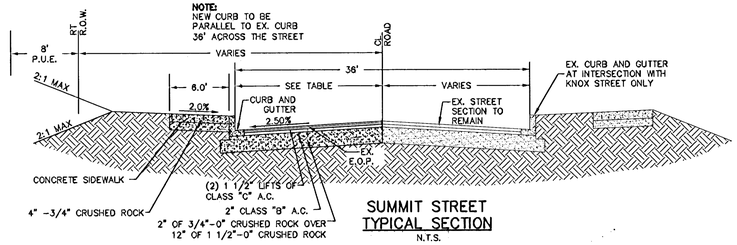

SUMMIT STREET
TYPICAL SECTION
N.T.S.

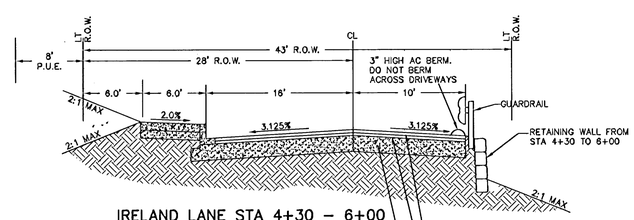

IRELAND LANE STA 4+30 - 6+00
TYPICAL SECTION
N.T.S.

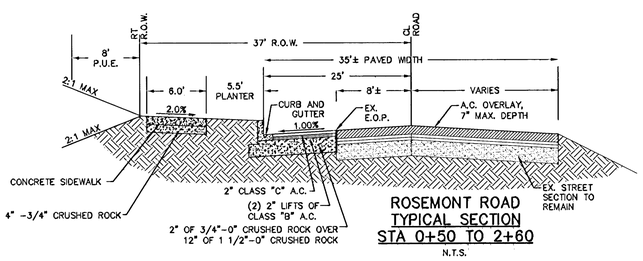

ROSEMONT ROAD
TYPICAL SECTION
STA 0+50 TO 2+60
N.T.S.

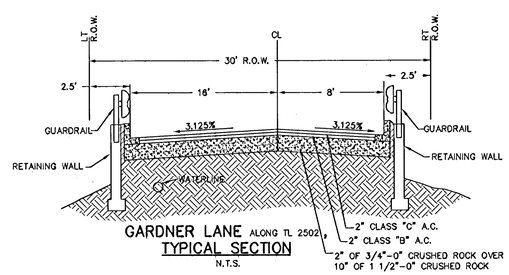

GARDNER LANE ALONG TL 2502,
TYPICAL SECTION
N.T.S.

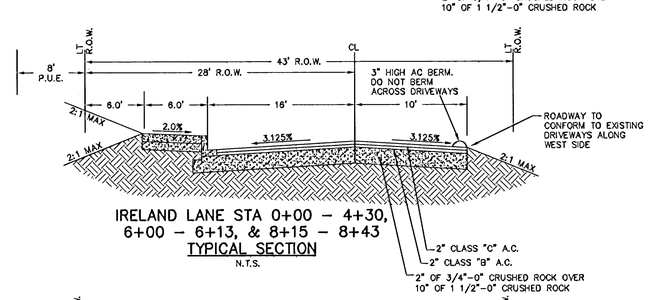

AS BUILT

IRELAND LANE STA 0+00 - 4+30,
6+00 - 6+13, & 8+15 - 8+43
TYPICAL SECTION
N.T.S.

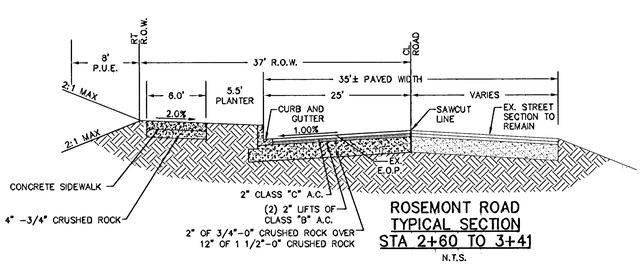

ROSEMONT ROAD
TYPICAL SECTION
STA 2+60 TO 3+41
N.T.S.

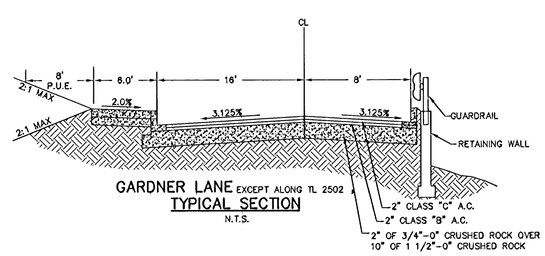

GARDNER LANE EXCEPT ALONG TL 2502
TYPICAL SECTION
N.T.S.

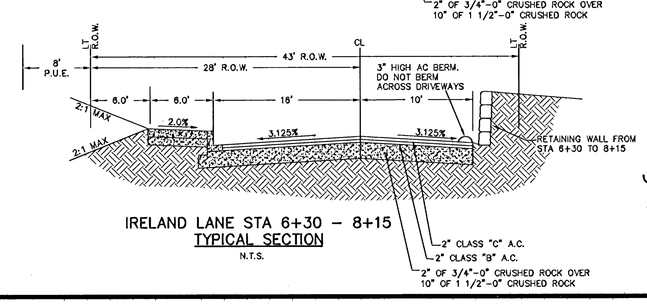

IRELAND LANE STA 6+30 - 8+15
TYPICAL SECTION
N.T.S.

REGISTERED PROFESSIONAL ENGINEER
OREGON
JULY 9, 2002
MARK P. MORRISON
EXP. 12/31/08
12/14/06

REVISIONS	BY
REVISED PER CITY COMMENTS (9/07/05)	MM
REVISED PER CITY COMMENTS 10/26/05	MM
REVISED ROSEMONT SECTION 8/09/06	MM
AS-BUILT 12-14-2006	LD

ROSEMONT POINTE
RENAISSANCE DEVELOPMENT

Typical Sections

SISUL ENGINEERING
375 PORTLAND AVENUE
GLADSTONE, OREGON 97027
(503) 657-0188

DRAWING 99-20sections.dwg

DATE	MAY 2005
SCALE	NOTED
DRAWN	MM
JOB	SGL 99-20A
SHEET	10 OF 17 SHEETS

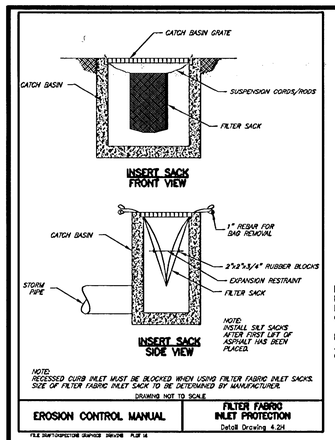

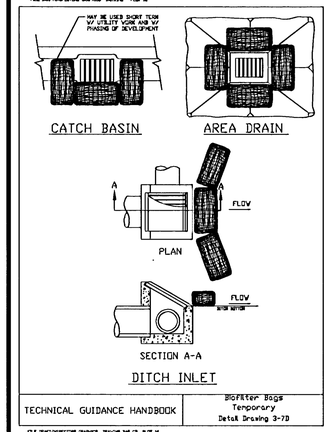

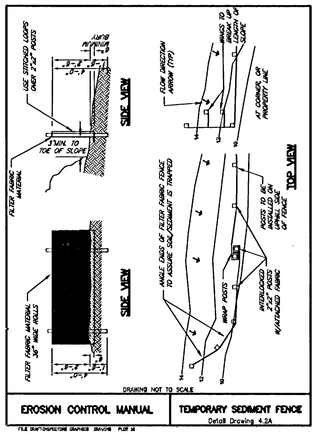

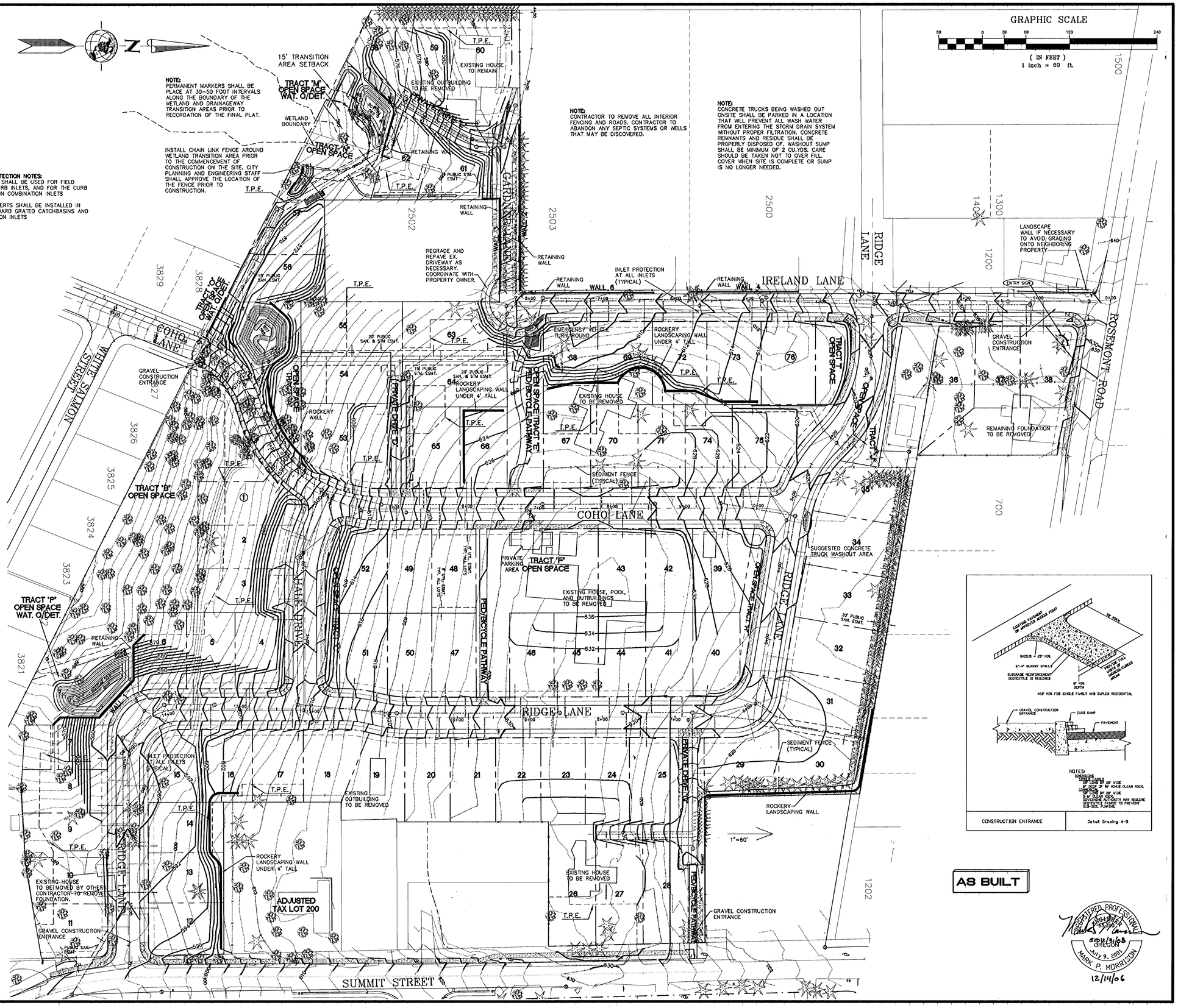

AS BUILT

REGISTERED PROFESSIONAL ENGINEER
OREGON
JULY 9, 2001
MARK P. MORRISON
12/14/06

REVISIONS	BY
REVISED PER CITY COMMENTS 10/26/05	MM
ADDED CONST. ENTR. ON SUMMIT 12/20/05	MM
UPDATED COMPLETE PLAN SET 4/06/06	MM
REVISED TRACT G & POND 5/10/06	MM
REVISED POND B TRACT D 6/30/06	MM
AS-BUILT 12-14-2006	LD

ROSEMONT POINTE
RENAISSANCE DEVELOPMENT

Grading and Erosion Control Plan

SISUL ENGINEERING
375 PORTLAND AVENUE
GLADSTONE, OREGON 97027
(503) 657-0188

DRAWING: SGL 99-20grd.dwg

DATE	MAY 2005
SCALE	1"=60'
DRAWN	MM
JOB	SGL 99-20A
SHEET	11 OF 17 SHEETS

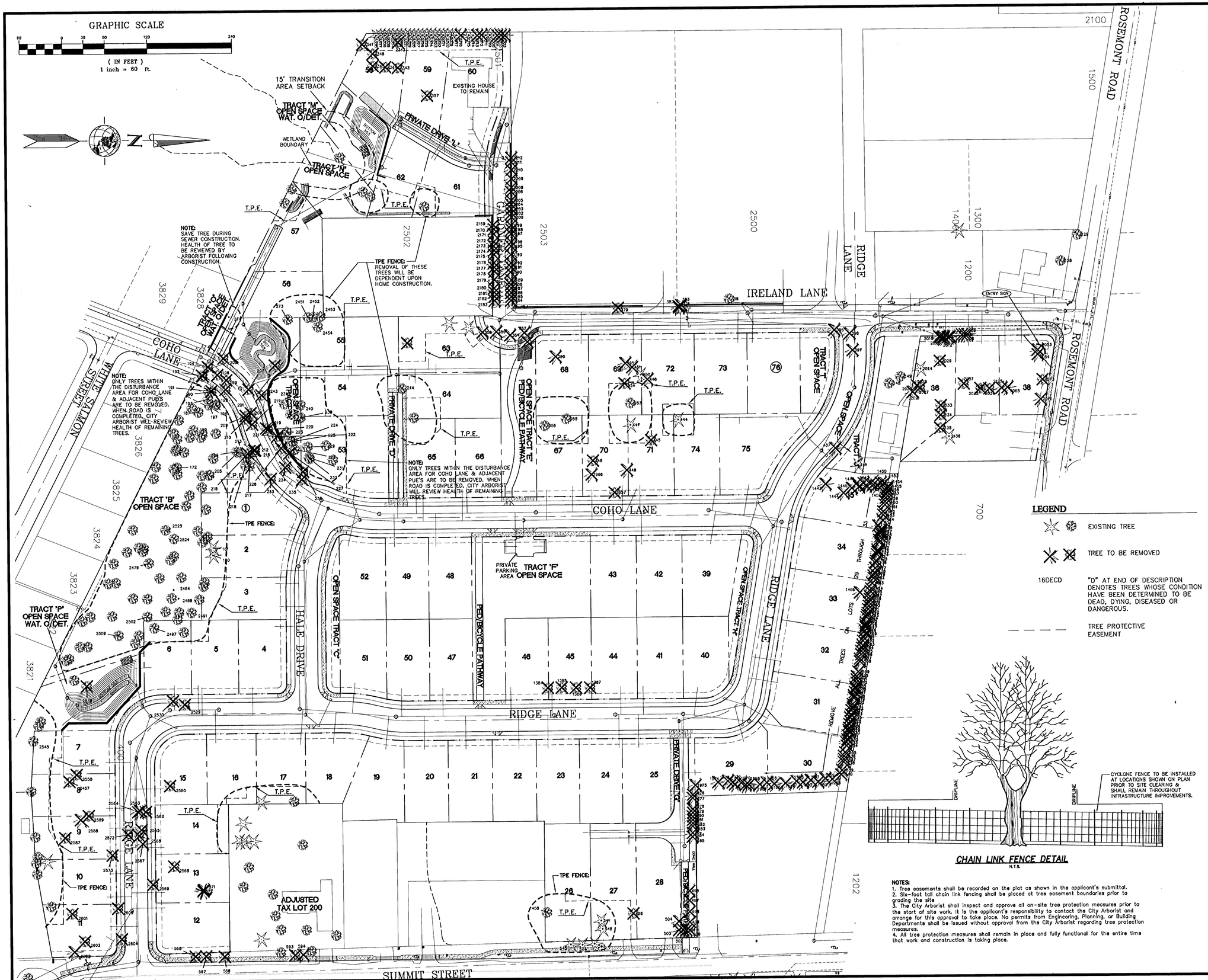

CHAIN LINK FENCE DETAIL
N.T.S.

NOTES:
1. Tree easements shall be recorded on the plat as shown in the applicant's submittal.
2. Six-foot tall chain link fencing shall be placed at tree easement boundaries prior to grading the site
3. The City Arborist shall inspect and approve all on-site tree protection measures prior to the start of site work. It is the applicant's responsibility to contact the City Arborist and arrange for this approval to take place. No permits from Engineering, Planning, or Building Departments shall be issued without approval from the City Arborist regarding tree protection measures.
4. All tree protection measures shall remain in place and fully functional for the entire time that work and construction is taking place.

Tree Number	Description	Tree Number	Description
180	10FIR	1526	10FIR
181	8FIR	1527	10FIR
172	8/100DEC	1528	8FIR
187	16DEC	1529	8FIR
189	170DEC	1530	8FIR
190	100DEC	1531	10FIR
191	160DEC	1532	9FIR
192	90DEC	1533	11FIR
193	120DEC	1534	9FIR
194	210DEC	1535	12FIR
195	200DEC	1536	12FIR
196	180DEC	1537	9FIR
197	160DEC	1538	9FIR
198	160DEC	1539	11FIR
199	110DEC	1540	11FIR
201	170DEC	1815	8/20DEC
204	180DEC	1869	41PINE
205	(2)100DEC	1874	24DEC
206	200DEC	1929	38PINE
207	(2)150DEC	1930	34PINE
208	170DEC	1931	41PINE
209	140DEC	1932	31PINE
210	140DEC	1933	43PINE
211	150DEC	1934	33PINE
212	130DEC	1935	29PINE
213	140DEC	1953	10PINE
214	100DEC	1953	9DEC
215	110DEC	1954	120DEC
216	110DEC	1955	170DEC
217	180DEC	1956	100DEC
218	180DEC	1957	140DEC
219	160DEC	1958	9FIR
220	110DEC	1959	7PINE
221	140DEC	1960	9PINE
222	140DEC	1961	8PINE
223	150DEC	1962	8PINE
224	140DEC	1963	8PINE
225	180DEC	1964	9PINE
226	8/110DEC	1965	8PINE
227	8/140DEC	1966	9PINE
228	110DEC	1967	7PINE
229	170DEC	1968	7PINE
231	220DEC	1970	10PINE
232	160DEC	1971	7PINE
233	330DEC	1972	10PINE
234	230DEC	1973	11PINE
235	280DEC	1974	9PINE
236	210DEC	1975	7PINE
238	150DEC	1976	6FIR
238	130DEC	1977	10FIR
240	140DEC	1978	8FIR
243	280DEC	1979	7FIR
244	17/220DEC	1980	8FIR
273	170DEC	1981	7FIR
274	170DEC	1982	8FIR
307	8FIR	1983	8FIR
308	13FIR	1984	8FIR
309	10/11FIR	1985	7FIR
351	9FIR	1986	11PINE
353	10FIR	2010	14FIR
354	12FIR	2011	11FIR
355	14FIR	2012	8FIR
356	11FIR	2013	14FIR
360	11PINE	2014	8FIR
379	240DEC	2015	12FIR
381	28FIR	2018	7FIR
382	14FIR	2021	8FIR
383	30FIR	2024	20PINE
386	3 DECS	2025	2 8DEC
395	8FIR	2026	8DEC
396	8FIR	2027	8DEC
397	8FIR	2028	2 6DEC
437	13PINE	2034	280DEC
441	14PINE	2035	130DEC
444	9FIR	2037	430DEC
446	20DEC	2053	12PINE
446	19PINE	2054	12PINE
447	19PINE	2065	12PINE
448	18DEC	2071	21PINE
449	9PINE	2073	15DEC
450	12PINE	2123	9PINE
451	12PINE	2133	7APPLE
458	150DEC	2134	7FRUIT
486	280DEC	2135	12DEC
496	15FIR	2138	9PINE
497	12FIR	2148	8DEC
498	7FIR	2149	7DEC
499	11FIR	2159	8PINE
500	11FIR	2170	11PINE
501	8FIR	2171	11PINE
502	12FIR	2172	11PINE
503	18FIR	2173	11PINE
504	15FIR	2174	9PINE
541	87REDWOOD	2175	9PINE
542	85REDWOOD	2176	8PINE
543	28PINE	2177	7PINE
544	34PINE	2178	7PINE
545	48PINE	2179	12PINE
566	270DEC	2180	11PINE
567	140DEC	2181	13PINE
568	290DEC	2182	10PINE
571	19FIR	2183	12PINE
572	8FIR	2184	12PINE
593	110DEC	2185	21PINE
594	2 7EVERGREEN	2186	12PINE
933	32PINE	2187	12PINE
934	36DEC	2188	12PINE
935	32PINE	2189	12PINE
1384	10FRUIT	2190	11PINE
1385	8FRUIT	2191	12PINE
1386	20FRUIT	2192	12PINE
1387	22FRUIT	2193	12PINE
1443	12FIR	2195	13PINE
1444	8FIR	2196	13PINE
1445	8FIR	2197	12PINE
1446	8FIR	2198	12PINE
1447	8FIR	2199	11PINE
1448	8FIR	2200	10PINE
1449	8FIR	2202	8PINE
1450	8FIR	2203	10PINE
1451	8FIR	2204	8PINE
1452	8FIR	2205	10PINE
1453	10FIR	2206	8PINE
1454	8FIR	2209	10PINE
1455	12FIR	2210	8PINE
1456	10FIR	2211	8PINE
1457	10FIR	2212	8PINE
1458	8FIR	2299	12PINE
1459	8FIR	2300	8PINE
1460	8FIR	2301	10PINE
1461	12FIR	2302	12PINE
1462	12FIR	2303	12PINE
1463	8FIR	2311	8PINE
1464	13FIR	2312	7PINE
1465	11FIR	2313	7PINE
1466	8FIR	2314	11PINE
1467	8FIR	2315	11PINE
1468	8FIR	2316	8PINE
1469	10FIR	2317	12PINE
1470	8FIR	2319	11PINE
1471	10FIR	2320	11PINE
1472	8FIR	2321	8PINE
1473	10FIR	2322	12PINE
1474	8FIR	2323	12PINE
1475	8FIR	2324	12PINE
1476	12FIR	2325	12PINE
1477	8FIR	2326	12PINE
1478	12FIR	2327	12PINE
1479	8FIR	2328	12PINE
1482	8FIR	2329	13PINE
1483	14FIR	2331	10PINE
1484	10FIR	2332	12PINE
1485	8FIR	2333	10PINE
1486	14FIR	2334	13PINE
1487	8FIR	2335	11PINE
1488	8FIR	2336	8PINE
1489	8FIR	2337	12PINE
1490	8FIR	2338	12PINE
1491	8FIR	2341	10DEC
1492	8FIR	2342	8APPLE
1493	8FIR	2343	7APPLE
1494	8FIR	2344	8APPLE
1495	8FIR	2345	7APPLE
1496	8FIR	2346	8APPLE
1497	8FIR	2357	360DEC
1498	8FIR	2431	80DEC
1499	8FIR	2452	100DEC
1500	12FIR	2453	180DEC
1502	12FIR	2454	8 10DEC
1503	10FIR	2457	150DEC
1504	10FIR	2479	90DEC
1505	12FIR	2484	270DEC
1506	8FIR	2488	230DEC
1507	12FIR	2491	200DEC
1508	8FIR	2497	(2)170DEC
1509	12FIR	2502	(2)120DEC
1510	10FIR	2509	6DEC20DUP
1511	8FIR	2524	36DEC
1512	8FIR	2525	12 18DEC
1515	12FIR	2529	170DEC
1516	8FIR	2530	190DEC
1517	8FIR	2538	370DEC
1518	8FIR	2545	360DEC
1519	11FIR	2550	150DEC
1520	8FIR	2560	70DEC
1521	8FIR	2562	70DEC
1522	8FIR	2563	12DEDAR
1523	8FIR	2564	24FIR
1524	11FIR	2565	8-10DEC
1525	8FIR	2566	90DEC
		2567	14PINE
		2568	80DEC
		2569	150DEC
		2572	300DEC
		2573	300DEC
		2587	240DEC
		2588	12FIR
		2589	200DEC
		2601	120DEC
		2602	28DEDAR
		2603	280DEC
		2604	280DEC
		2605	70DEC
		3128	100DEC
		3129	100DEC

REVISIONS	BY
REVISED PER CITY COMMENTS (9/07/05)	MM
REMOVED TREES LOTS 29-35 (9/09/05)	MM
REVISED PER CITY COMMENTS 10/26/05	MM
UPDATED COMPLETE PLAN SET 4/06/06	MM

ROSEMONT POINTE
RENAISSANCE DEVELOPMENT

Tree Plan

SISUL ENGINEERING
375 PORTLAND AVENUE
GLADSTONE, OREGON 97027
(503) 657-0188
DRAWING: 99-20tree.dwg

REGISTERED PROFESSIONAL ENGINEER
OREGON
JULY 9, 2001
MARK P. MORRISON
EXPIRES 12/31/08
12/14/06

DATE	MAY 2005
SCALE	1"=60'
DRAWN	MM
JOB	SGL 99-20A
SHEET	15
OF	17 SHEETS

REVISIONS	BY
AS BUILT 12/14/06	MM

ROSEMONT POINTE
RENAISSANCE DEVELOPMENT

Details

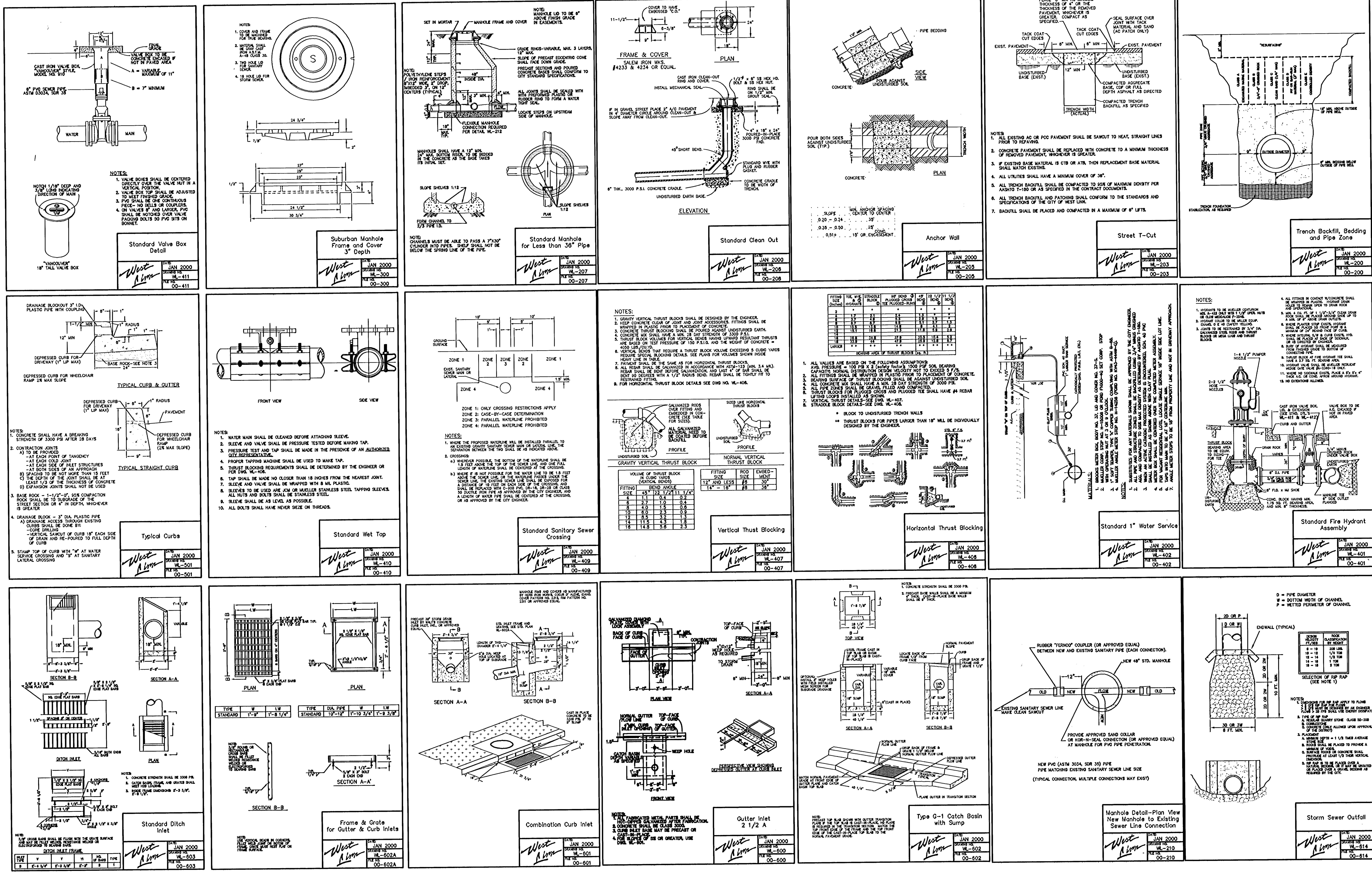

AS BUILT

SISUL ENGINEERING
375 PORTLAND AVENUE
GLADSTONE, OREGON 97027
(503) 657-0188
DRAWING: 99-20DETAILS.dwg

DATE	MAY 2005
SCALE	NOTED
DRAWN	MM
JOB	SGL 99-20A
SHEET	16
OF 17	SHEETS

REGISTERED PROFESSIONAL ENGINEER, OREGON, July 9, 2001, MARK P. MORRISON, 12/14/06

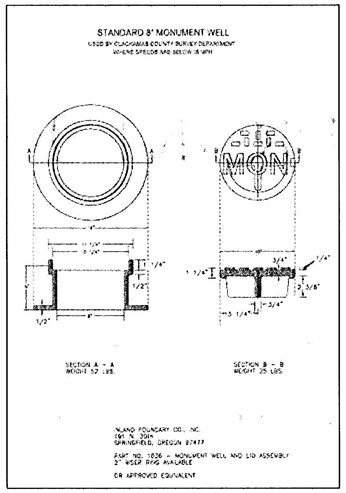

8 - inch frames and covers:
The 8" boxes are typically acceptable for most local streets (subdivisions) with speeds of less than 35 miles per hour.
Available from:
East Jordan Iron Works, Inc. (formerly known as Inland Foundry)
191 N. 39th
Springfield, Oregon 97477
541-747-9172
541-747-1283 Fax.

Additional Vendor for 8" frames and covers:
Olympic Foundry Inc.
6530 NE 42nd Avenue
Portland, Oregon 97218
503-281-3381
503-284-5880 Fax

As Approved by the County Surveyor:
- Pattern No. M1010 for 8" frame / "Mon" cover

Or equivalent as approved by the County Surveyor. See drawing for detail
- Part number 1036 for 8" frame and cover
- 2" paving riser rings available

Following are local vendors for the East Jordan Iron Works, Inc. Part # 1036 Monument Box.
- CASCADE CONCRETE SUPPLY CO., INC.
  P.O. Box 1245 / Yard 33605 Hwy 30 East Crown Zellerbach Rd.
  Scappoose OR 97056
  1-503-453-5213 Attn: Tom or Bruce
- RINKER MATERIALS CORPORATION / CSR ASSOCIATED
  19595 SW 118th
  Tualatin OR
  1-503-692-3885 Attn: Geoff Clifford or Derek
- ADVANTAGE PRECAST
  1302 Candlewood Rd.
  Keizer OR 97303
  1-503-390-2048 Attn: Rick Day

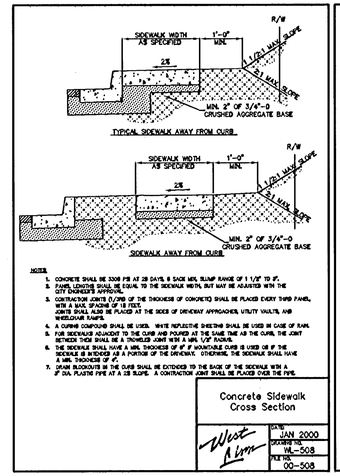

Concrete Sidewalk Cross Section
West Linn — DATE JAN 2000 — DRAWING NO. WL-508 — FILE NO. 00-508

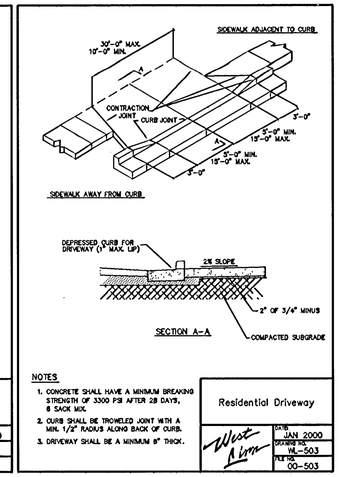

Residential Driveway
West Linn — DATE JAN 2000 — DRAWING NO. WL-503 — FILE NO. 00-503

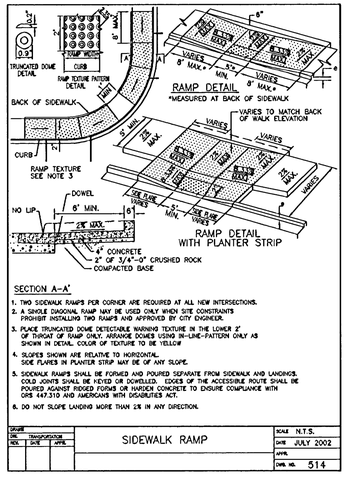

SIDEWALK RAMP

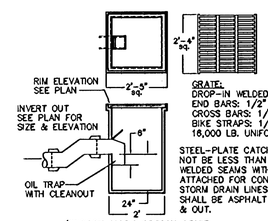

GRATE:
DROP-IN WELDED STEEL
END BARS: 1/2" X 2"
CROSS BARS: 1/2" X 2" @ 2" O.C.
BIKE STRAPS: 1/8" X 1"
16,000 LB. UNIFORM LOAD CAPACITY

STEEL-PLATE CATCHBASINS SHALL NOT BE LESS THAN 10 GAUGE WITH WELDED SEAMS WITH SLEEVES ATTACHED FOR CONNECTING THE STORM DRAIN LINES. CATCHBASINS SHALL BE ASPHALT COATED INSIDE & OUT.

(SECTION 1108.0 OREGON STATE PLUMBING SPECIALTY CODE)

PRIVATE CATCHBASIN DETAIL
IN PAVED AREAS
N.T.S.

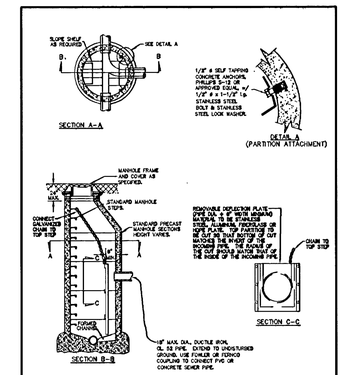

Standard Inside Drop Manhole "Oregon Drop" Manhole
West Linn — DATE JAN 2000 — DRAWING NO. WL-604 — FILE NO. 00-604

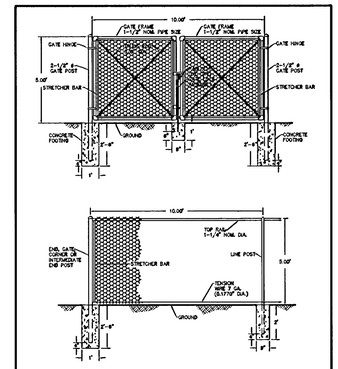

Surface Water Facility Fence
West Linn — DATE JAN 2000 — DRAWING NO. WL-616 — FILE NO. 00-616

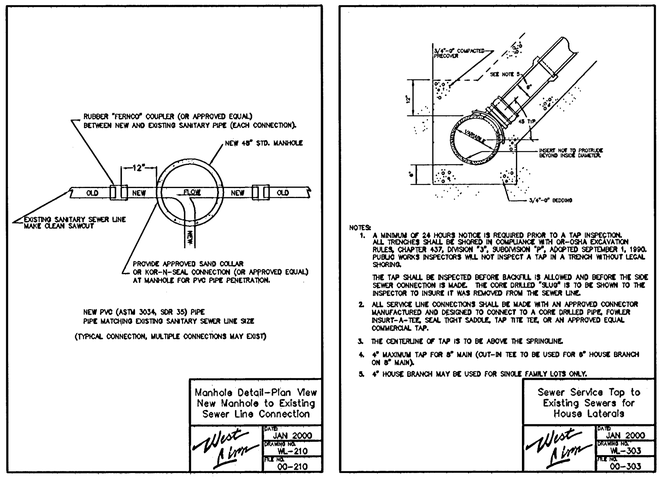

Manhole Detail-Plan View New Manhole to Existing Sewer Line Connection
West Linn — DATE JAN 2000 — DRAWING NO. WL-210 — FILE NO. 00-210

Sewer Service Tap to Existing Sewers for House Laterals
West Linn — DATE JAN 2000 — DRAWING NO. WL-303 — FILE NO. 00-303

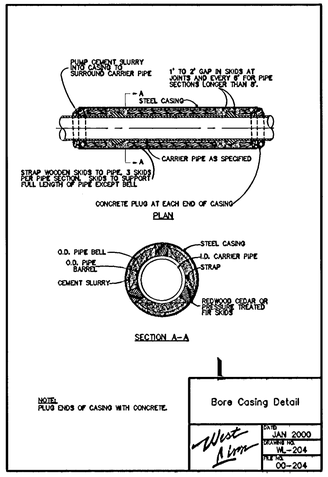

Bore Casing Detail
West Linn — DATE JAN 2000 — DRAWING NO. WL-204 — FILE NO. 00-204

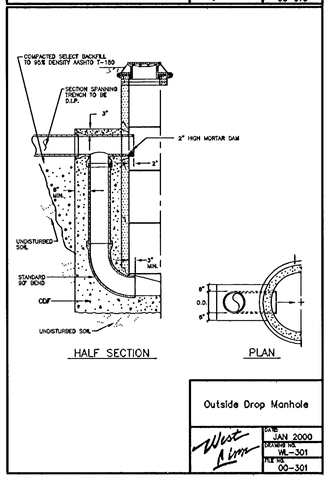

Outside Drop Manhole
West Linn — DATE JAN 2000 — DRAWING NO. WL-301 — FILE NO. 00-301

AS BUILT

REGISTERED PROFESSIONAL ENGINEER — OREGON — EXP. 12/31/08 — July 9, 2001 — MARK P. MORRISON
12/14/06

REVISIONS	BY
REVISED PER CITY COMMENTS (9/07/05)	MM
REVISED PER CITY COMMENTS 10/26/05	MM
AS BUILT 12/14/06	MM

ROSEMONT POINTE
RENAISSANCE DEVELOPMENT

Details

SISUL ENGINEERING
375 PORTLAND AVENUE
GLADSTONE, OREGON 97027
(503) 657-0188
DRAWING: 99-20DETAILS.dwg

DATE MAY 2005
SCALE NOTED
DRAWN MM
JOB SGL 99-20A
SHEET 17 OF 17 SHEETS

NORTH

GRAPHIC SCALE

(IN FEET)
1 inch = 60 ft.

NOTES:

1. CONTRACTOR IS RESPONSIBLE FOR CHECKING QUANTITIES OF PLANT MATERIAL. IF DISCREPANCIES OCCUR, DESIGN INTENT PREVAILS OVER QUANTITIES SHOWN.

2. STAGGER PLANTINGS SO THAT GROWTH LOOKS NATURAL.

3. TO ALL DISTURBED AREAS: APPLY UPLAND SEED MIX EXCEPT AS SHOWN ON PLAN.

4. SEED MIX FOR WATER QUALITY PONDS:
-WEST POND: "WET AREA SEED MIX" FROM BOTTOM OF POND TO ELEV. 568. "UPLAND SEED MIX" FROM ELEV. 568 TO END OF DISTURBED GRADE FOR POND CONSTRUCTION.
-EAST POND: "WET AREA SEED MIX" FROM BOTTOM OF POND TO ELEV. 564. "UPLAND SEED MIX" FROM ELEV. 564 TO END OF DISTURBED GRADE FOR POND CONSTRUCTION.
APPLY ALL SEED MIXES AS PER SUPPLIER'S SPECIFAICATIONS. PLANT TREES, SHRUBS & GROUNDCOVER AFTER SEED AS BEEN APPLIED.

5. ALL WATER QUALITY AREAS PLANTS AND PLANTING SHALL CONFORM TO WEST LINN STORM WATER QUALITY AND DETENTION STANDARDS 33.000. ALL OTHER PLANTINGS TO CONFORM TO AMERICAN NURSERY STANDARDS ANS 1260.1. PLANT IN ACCORDANCE TO STANDARDS ADOPTED BY OREGON LANDSCAPE CONTRACTORS BOARD OLCB.

6. TOPSOIL WILL BE STOCKPILED ON SITE TO USE FOR PLANTING AREAS. WATER QUALITY AREAS: 12" DEEP, SHRUB BEDS: 6" DEEP, SEEDED AREAS: 2" DEEP.

7. SEE CIVIL ENGINEERING DRAWINGS FOR STORMWATER POND ELEVATIONS, FENCE LINE, PATHS, AND OTHER SPECIFIC INFORMATION.

8. DEVELOPER WILL PAY THE CITY OF WEST LINN PARKS DEPT. $150 FOR EACH REQUIRED TREE AND ALL STREET TREES WILL BE PLANTED BY THE PARKS DEPT.

9. SEE SHEET L3.0 FOR PLANTING DETAIL AND PLANTING LIST FOR TRACT K. TRACT K PLANTS NOT INCLUDED IN PLANT LIST ON L1

10. REMOVE INVASIVE PLANT SPECIES (SUCH AS BLACKBERRIES, CANADIAN THISTLE, CREEPING BENT GRASS, VELVET GRASS, ENGLISH PLANTAIN, AND QUEEN ANNE'S LACE) FROM ALL OPEN SPACES. MAINTAIN DURING THE FULL WARRANTY PERIOD OR UNTIL PLANTS ARE ESTABLISHED WHICHEVER IS FIRST.

PLANT LIST

QUANT.	PLANT NAME	COND./SPACING
64	OCTOBER GLORY MAPLE ACER RUBRUM 'OCTOBER GLORY'	2" CAL./30' O.C.
34	ACER RUBRUM (COLUMNAR) TO BE SELECTED BY CITY ARBORIST	2" CAL./25' O.C.
33	ACER RUBRUM (SPREADING) TO BE SELECTED BY CITY ARBORIST	2" CAL./30' O.C.
84	SCARLET OAK QUERCUS COCCINEA	2" CAL./35' O.C.
68	JAPANESE SNOWBELL STYRAX JAPONICUS	2" CAL./20'-25' O.C.
257	OREGON GRAPE MAHONIA AQUIFOLIUM	2 GAL./30" O.C.
27	COMPACT STRAWBERRY TREE ARBUTUS UNEDO 'COMPACTA'	36" CONT. /4' O.C.
63	TEXAS PRIVET LIGUSTRUM JAPONICUM 'TEXANUM'	30" CONT./3' O.C.
253	NEWPORT DWARF ESCALLONIA ESCALLONIA 'NEWPORT DWARF'	1 GAL. CONT./24" O.C.
1	CAMELLIA 'WINTER'S STAR' WINTER'S STAR CAMELLIA	5 GAL. CONT
4	AZALEA GLACIER GLACIER AZALEA	1 GAL. CONT./30" O.C.
214-	KINNIKINNICK ARCTOSTAPHYLOS UVA-URSI	1 GAL. CONT./12" O.C.
30	COMPACT OREGON GRAPE MAHONIA AQUIFOLIUM 'COMPACTA'	1 GAL. CONT./24" O.C.
	LAWN SEED MIX 41,105 SF PROTIME #303 - SUN MIX LAWN SEED BLEND OR APPROVED EQUAL	

TRACT 'M' OPEN SPACE WAT. Q/DET.

TRACT 'O' OPEN SPACE WAT. Q/DET.

SEED ALL DISTURBED AREAS WITH UPLAND SEED MIX

TRACT 'B' OPEN SPACE

TRACT 'P' OPEN SPACE WAT. Q/DET.

SEED ALL DISTURBED AREAS W/ UPLAND SEED MIX

INDIAN PLUM

WESTERN RED CEDAR

UPLAND SEED MIX

DOUGLAS FIR

ADJUSTED TAX LOT 200

ACER RUBRUM (COLUMNAR)

LAWN

STRAWBERRY TREE

OREGON GRAPE

LAWN

OCTOBER GLORY MAPLE

ACER RUBRUM (SPREADING)

LAWN

TRACT K, SEE L3 FOR DETAIL

LAWN

3' GATE FENCE

5' SERVICE GATE

STRAWBERRY TREE

CLUB HOUSE

POOL

LAWN

DETAIL PLANTING L-2

JAPANESE SNOWBELL

SCARLET OAK

OREGON GRAPE

POOL LAYOUT - 1"= 30'

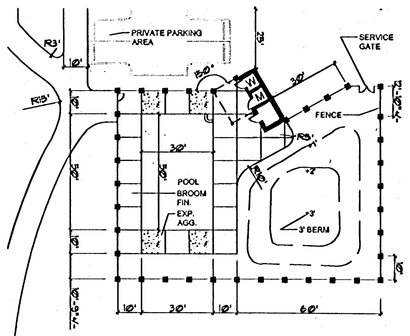

REGISTERED LANDSCAPE ARCHITECT
ROBERT P. PERRON
OREGON

DESIGN COLLABORATIVE
PLANNING
VISIONING
LANDSCAPE ARCHITECTURE
Urban Plaza, Suite 308
505 S.W. Broadway
Portland, OR 97205-3508
Tel 503 223 0256
Fax 503 223 2837
bob.perron@harrisondice.com

REVISIONS	BY
11-3-05	JH

ROSEMONT POINTE

RENAISSANCE DEVELOPMENT

Planting Plan

SISUL ENGINEERING
375 PORTLAND AVENUE
GLADSTONE, OREGON 97027
(503) 657-0188

DATE	9/14/05
SCALE	H: V:
DRAWN	JH/VL
JOB	99-20A
SHEET	L1
OF	4 SHEETS

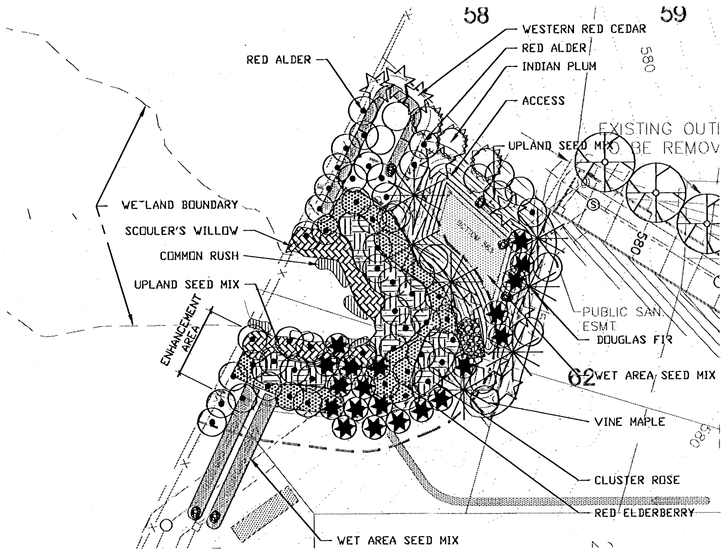

TRACT N DETAIL LANDSCAPE - 1"= 30'

TRACT N WATER QUALITY PLANTS

7	DOUGLAS FIR PSEUDOTSUGA MENZIESII	3-4' CONT./AS SHOWN
11	VINE MAPLE ACER CIRCINATUM	5-6' CONT./10' O.C.
9	WESTERN RED CEDAR THUJA PLICATA	6-7' B&B/AS SHOWN
6	RED ALDER ALNUS RUBRA	2 GAL. 10' O.C.
3	INDIAN PLUM OEMLERIA CERASIFORMIS	1 GAL./10' O.C.

WET AREA SEED MIX - SEE NOTE FOR LOCATION-PROTIME 406

2,327 SF	AMERICAN SLOUGHGRASS/BECKMANNIA SYZIGACHNE	45%
	WESTERN MANNAGRASS/GLYCERIA OCCIDENTALIS	45%
	COMMON RUSH /JUNCUS BALTICUS	5%
	SLOUGH SEDGE/CAREX OBNUPTA	5%

UPLAND SEED MIX - HOBBS & HOPKINS PROTIME COMPANION MIX SEE NOTE FOR LOCATION

3,637 SF	DWARF PERENNIAL RYE GRASS LOLIUM PERENNE	80%
	CREEPING RED FESCUE FESTUCA RUBRA	20%

TRACT N RIPARIAN TRANSITION ENHANCEMENT AREA PLANT LIST

43	RED ALDER ALNUS RUBRA	2 GAL. 10' O.C.
15	BALSAM POPLAR POPULUS BALSAMIFERA	2 GAL. 10' O.C.
100	CLUSTER ROSE ROSA PISOCARPA	1 GAL. 5' O.C. *
50	SCOULER'S WILLOW SALIX SCOULERIANA	1 GAL. 5' O.C. *
50	RED ELDERBERRY SAMBUSCUS RACEMOSA	1 GAL. 5' O.C. *
50	COMMON RUSH JUNCUS PATENS	PLUGS 6" O.C. *

* PLANTS SHOULD BE PLACED IN SAME SPECIES CLUMPS OF 3 TO ENCOURAGE PLANT MASSING

UPLAND SEED MIX - HOBBS & HOPKINS PROTIME COMPANION MIX

13,939 SF	DWARF PERENNIAL RYE GRASS/LOLIUM PERENNE	80%
	CREEPING RED FESCUE/FESTUCA RUBRA	20%

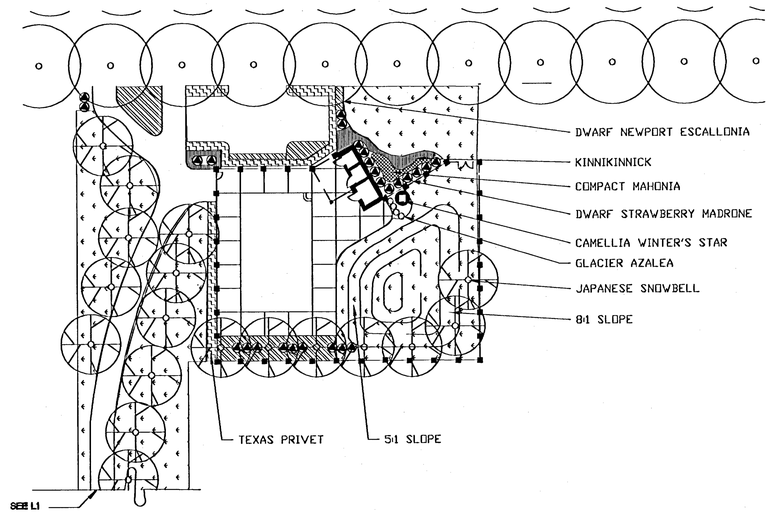

POOL DETAIL LANDSCAPE - 1"= 30'

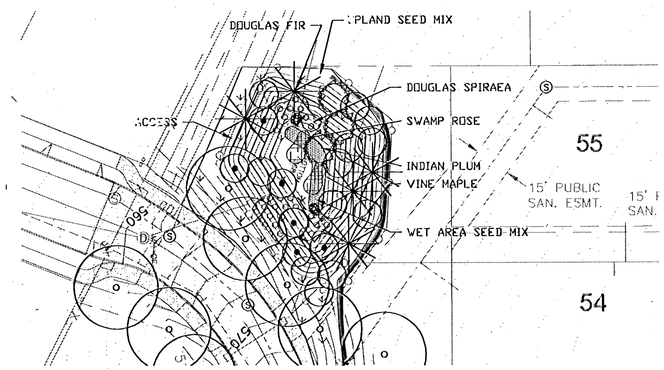

TRACT A DETAIL LANDSCAPE - 1"= 30'

TRACT A WATER QUALITY PLANTS

5	DOUGLAS FIR PSEUDOTSUGA MENZIESII	3-4' CONT./AS SHOWN
12	VINE MAPLE ACER CIRCINATUM	5-6' CONT./10' O.C.
6	RED ALDER ALNUS RUBRA	2 GAL. 10' O.C.
3	INDIAN PLUM OEMLERIA CERASIFORMIS	1 GAL./10' O.C.
46	SWAMP ROSE ROSA PALUSTRIS	1 GAL./24" O.C.
130	DOUGLAS SPIREA SPIRAEA DOUGLASII	1 GAL./24" O.C.

WET AREA SEED MIX - SEE NOTE FOR LOCATION-PROTIME 406

224 SF	AMERICAN SLOUGHGRASS/BECKMANNIA SYZIGACHNE	45%
	WESTERN MANNAGRASS/GLYCERIA OCCIDENTALIS	45%
	COMMON RUSH /JUNCUS BALTICUS	5%
	SLOUGH SEDGE/CAREX OBNUPTA	5%

UPLAND SEED MIX - HOBBS & HOPKINS PROTIME COMPANION MIX SEE NOTE FOR LOCATION

7,067 SF	DWARF PERENNIAL RYE GRASS LOLIUM PERENNE	80%
	CREEPING RED FESCUE FESTUCA RUBRA	20%

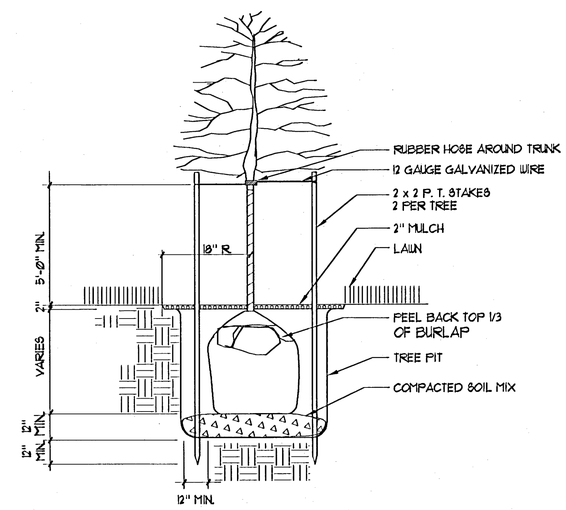

NOTE: DRIVE STAKES OUTSIDE OF ROOT BALL. SINGLE STAKE TREES LESS THAN 6'. TRIPLE STAKE DECIDUOUS TREES 3" CALIPER & GREATER UNLESS OTHERWISE STATED ON THE PLANS.

TREE PLANTING DETAIL

N.T.S.

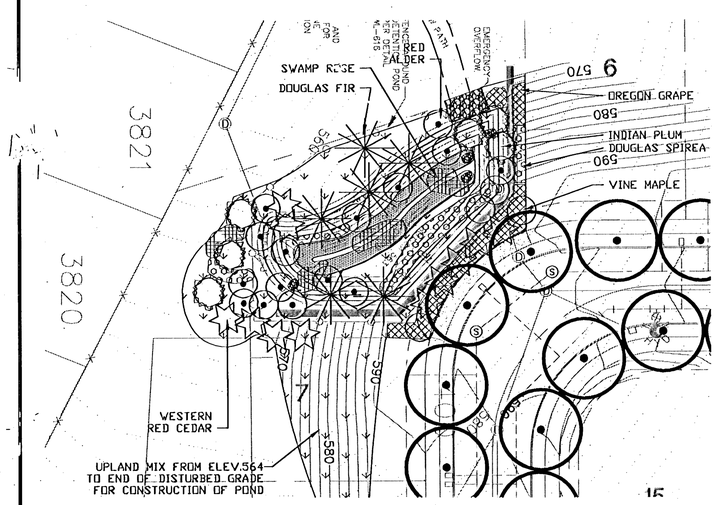

TRACT P DETAIL LANDSCAPE - 1"= 30'

TRACT P WATER QUALITY PLANTS

6	DOUGLAS FIR PSEUDOTSUGA MENZIESII	3-4' CONT./AS SHOWN
4	VINE MAPLE ACER CIRCINATUM	5-6' CONT./10' O.C.
11	WESTERN RED CEDAR THUJA PLICATA	6-7' B&B/AS SHOWN
15	RED ALDER ALNUS RUBRA	2 GAL.CONT./10' O.C.
6	INDIAN PLUM OEMLERIA CERASIFORMIS	1 GAL./10' O.C.
166	SWAMP ROSE ROSA PALUSTRIS	1 GAL./24" O.C.
204	DOUGLAS SPIREA SPIRAEA DOUGLASII	1 GAL./24" O.C.
165	OREGON GRAPE MAHONIA AQUIFOLIUM	2 GAL./30" O.C.

WET AREA SEED MIX - SEE NOTE FOR LOCATION- PROTIME 406

1,008 SF	AMERICAN SLOUGHGRASS/BECKMANNIA SYZIGACHNE	45%
	WESTERN MANNAGRASS/GLYCERIA OCCIDENTALIS	45%
	COMMON RUSH /JUNCUS BALTICUS	5%
	SLOUGH SEDGE/CAREX OBNUPTA	5%

UPLAND SEED MIX - HOBBS & HOPKINS PROTIME COMPANION MIX SEE NOTE FOR LOCATION

11,766 SF	DWARF PERENNIAL RYE GRASS LOLIUM PERENNE	80%
	CREEPING RED FESCUE FESTUCA RUBRA	20%

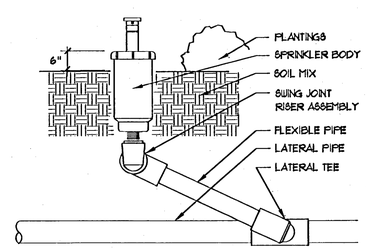

SHRUB POP-UP HEAD

N. T. S.

REGISTERED 23 ROBERT P. PERRON OREGON LANDSCAPE ARCHITECT

PERRON COLLABORATIVE
PLANNING
VISIONING
LANDSCAPE
ARCHITECTURE
Union Station, Suite 308
1000 N.W. Lovejoy St.
Portland, OR 97209-3100
Tel 503 223 5108
Fax 503 223 3017
bob_perron@surrounding.com

REVISIONS	BY
11-3-05	JH

ROSEMONT POINTE
RENAISSANCE DEVELOPMENT

Planting Plan and Details

SISUL ENGINEERING
375 PORTLAND AVENUE
GLADSTONE, OREGON 97027
(503) 657-0188

DATE 9/14/05
SCALE H: V:
DRAWN JH/VL
JOB 99-20A
SHEET L2
OF 4 SHEETS

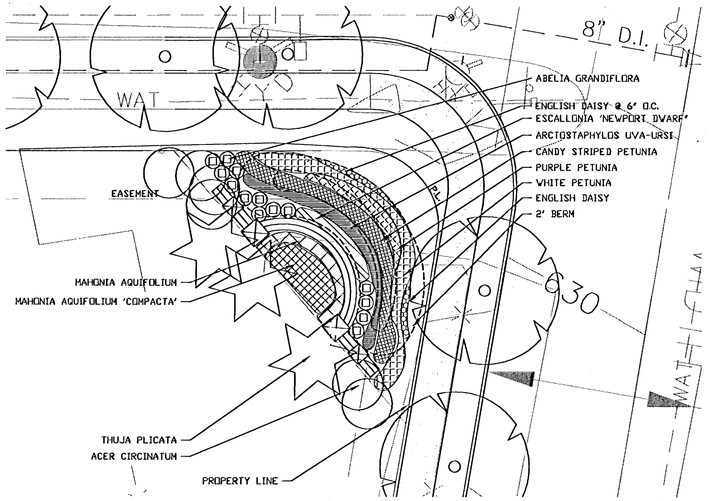

TRACT K DETAIL LANDSCAPE - 1"= 10'

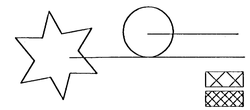

QUANT.	PLANT NAME	COND./SPACING
6	VINE MAPLE ACER CIRCINATUM	10'-12' CONT./MULTI-STEMMED
3	WESTERN RED CEDAR THUJA PLICATA	12'-14' B&B
8	OREGON GRAPE MAHONIA AQUIFOLIUM	2 GAL./24" O.C.
20	COMPACT OREGON GRAPE MAHONIA AQUIFOLIUM 'COMPACTA'	1 GAL. /24" O.C.
14	GLOSSY ABELIA ABELIA X GRANDIFLORA	30" CONT./24' O.C.
9	NEWPORT DWARF ESCALLONIA ESCALLONIA 'NEWPORT DWARF'	1 GAL. CONT./24" O.C.
115	ENGLISH DAISY BELLIS PERENNIS	1 GAL. CONT./6" O.C.
285	CANDY STRIPED PETUNIA CANDY STREPED PETUNIA	4" POTS/8" O.C.
115	PURPLE PETUNIA PURPLE PETUNIA	4" POTS /8" O.C.
295	WHITE PETUNIA WHITE PETUNIA	4" POTS/8" O.C.
80	KINNIKINNICK ARCTOSTAPHYLOS UVA-URSI	1 GAL. CONT./12" O.C.

TRACT K PLANTING LIST

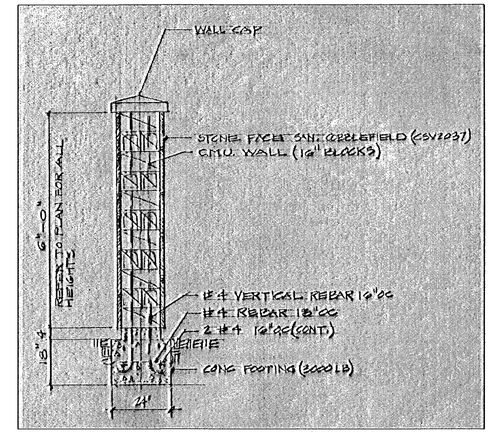

ENTRY WALL SECTION - 1/2"= 1'-0"

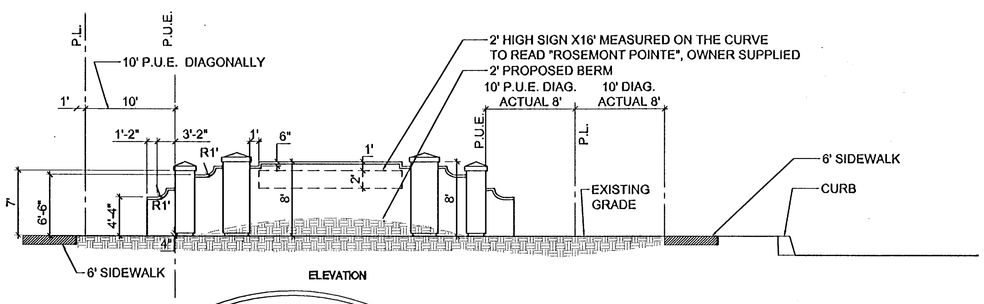

ELEVATION

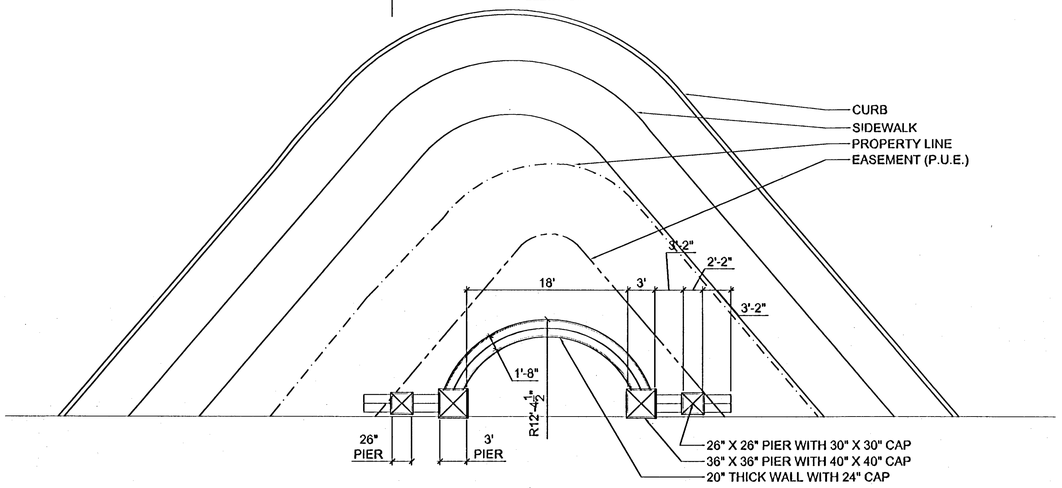

PLAN

ENTRY SIGN PLAN AND ELEVATION - $\frac{1}{8}$"=1'-0"

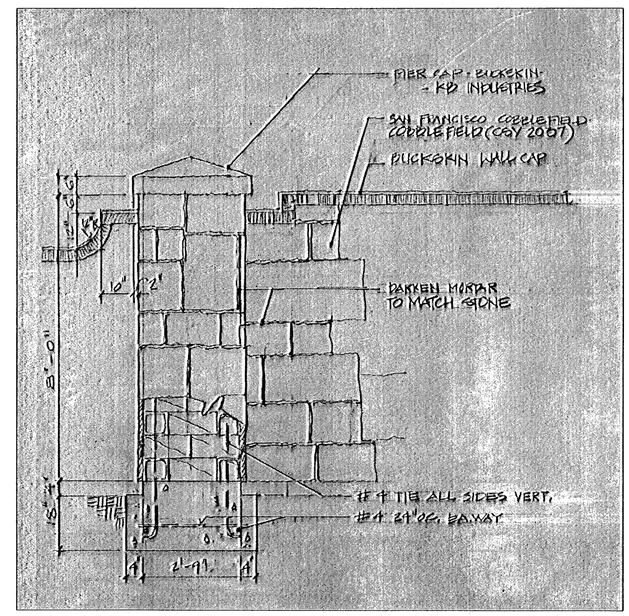

ENTRY PIER SECTION - 1/2"= 1'-0"

REGISTERED LANDSCAPE ARCHITECT
23
ROBERT P. PERRON
OREGON

PERRON COLLABORATIVE
PLANNING
VISIONING
LANDSCAPE
ARCHITECTURE
Union Station, Suite 309
800 NW Sixth Avenue
Portland, OR 97209-3700
Tel 503 223 8166
Fax 503 223 2817
bob.perron@surroundine.com

REVISIONS	BY

ROSEMONT POINTE

RENAISSANCE DEVELOPMENT

Planting Plan and Details

SISUL ENGINEERING
375 PORTLAND AVENUE
GLADSTONE, OREGON 97027
(503) 657-0188

DATE	9/14/05
SCALE	H: V:
DRAWN	JH/VL
JOB	99-20A
SHEET	L3
OF	4 SHEETS

NOTES:

1. TEMPORARY IRRIGATION SHALL BE INSTALLED FOR EACH WATER QUALITY AREA AND MAINTAIN FOR 2 YEARS UNTIL THE PLANTS ARE ESTABLISHED.

2. WATER METERS-REFER TO CIVIL FOR LOCATION.

3. LANDSCAPE CONTRACTOR TO FURNISH AND INSTALL CODE APPROVED D.C.V. FOR EACH TRACT SHOWN.

4. ALL WATER METERS TO BE 3/4", 1" DISTRIBUTION LINES TO VALVES.

5. PROVIDE BATTERY OPERATED VALVES ON ALL TEMPORARY IRRIGATION AND OTHER TRACTS UNLESS OTHERWISE INDICATED.

6. LANDSCAPE CONTRACTOR TO PROVIDE VALVE AND HEAD LAYOUT PLANS FOR LANDSCAPE ARCHITECT TO REVIEW PRIOR TO CONSTRUCTION.

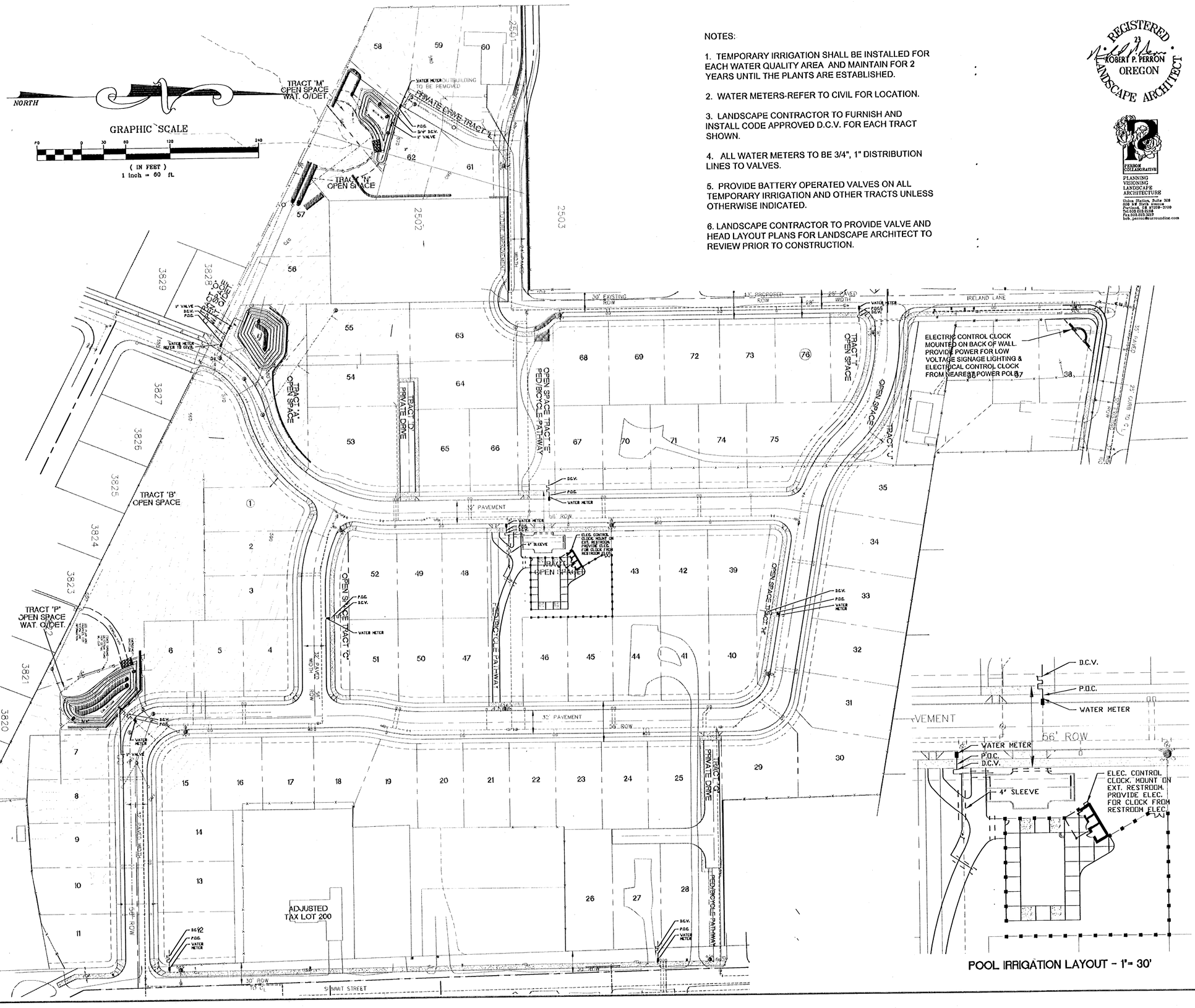

POOL IRRIGATION LAYOUT - 1"= 30'

REGISTERED LANDSCAPE ARCHITECT
ROBERT P. PERRON
OREGON

PERRON COLLABORATIVE
PLANNING
VISIONING
LANDSCAPE ARCHITECTURE
Union Station Suite 328
800 NW Sixth Avenue
Portland, OR 97209-3709
Tel 503 223 8187
Fax 503 223 8187
bob_perron@surroundine.com

REVISIONS	BY

ROSEMONT POINTE

RENAISSANCE DEVELOPMENT

Irrigation Plan

SISUL ENGINEERING
375 PORTLAND AVENUE
GLADSTONE, OREGON 97027
(503) 657-0188

DATE	9/14/05
SCALE	H: V:
DRAWN	JH/VL
JOB	99-20A
SHEET	L4
OF	4 SHEETS