XREF LIST
Ltscale: 40
Resolved
D822X006
D822X190
D822X230
D822XWRG
Unresolved
D822X400
D822X430

ROGERFIELD PHASE II
BEACON HILL LANE EXTENSION
WEST LINN, OREGON

GENERAL NOTES

1. ALL CONSTRUCTION SHALL BE IN ACCORDANCE WITH THE "CITY OF WEST LINN STREET/UTILITY DESIGN AND CONSTRUCTION STANDARDS", DATED MAY 22, 2000 AND OAR'S CHAPTER 333. ALL STREET, STORM SEWER AND SANITARY SEWER CONSTRUCTION THAT IS NOT ADDRESSED IN THE CITY'S STANDARDS SHALL BE IN ACCORDANCE WITH APWA STANDARDS. ALL WATER SYSTEM CONSTRUCTION THAT IS NOT ADDRESSED IN THE CITY'S STANDARDS SHALL BE IN ACCORDANCE WITH AWWA STANDARDS. CONTRACTOR TO OBTAIN A COPY OF THE GEOTECHNICAL REPORT PREPARED FOR THIS PROJECT PRIOR TO CONSTRUCTION.
2. PRIOR TO ANY CONSTRUCTION, LOCATIONS OF EXISTING UTILITIES SHALL BE VERIFIED BY THE CONTRACTOR. WHEN ACTUAL CONDITIONS DIFFER FROM THOSE SHOWN ON THE PLANS, THE CONTRACTOR SHALL NOTIFY THE ENGINEER PRIOR TO PROCEEDING WITH CONSTRUCTION.
3. ORGANIC AND NON-DESIRABLE MATERIALS SHALL BE REMOVED FROM THE CONSTRUCTION AREA AS DIRECTED BY THE GEOTECHNICAL ENGINEER.
4. ALL FILL AREAS SHALL BE STRIPPED OF ORGANIC MATERIAL. FILL WILL BE PLACED IN 6-INCH LAYERS AND COMPACTED TO 95 PERCENT RELATIVE MAXIMUM DENSITY ACCORDING TO AASHTO T-180 STANDARDS. LANDSCAPE AREAS SHALL BE COMPACTED TO 90 PERCENT. THE CONTRACTOR SHALL PROVIDE COMPACTION TESTING, ONE FOR EVERY 10,000 SQUARE FEET OF AREA AND FOR EVERY 2 LAYERS OR 16" AND EVERY 100 LINEAR FEET OF FILL PLACED. COMPACTION REPORTS FROM A NATIONALLY ACCREDITED TESTING LAB SHALL BE SUPPLIED TO THE ENGINEER. A COPY OF THE REPORTS SHALL BE GIVEN TO THE CITY.
5. CONTRACTOR SHALL LEAVE ALL AREAS OF THE PROJECT FREE OF DEBRIS AND UNUSED CONSTRUCTION MATERIALS.
   a. AREAS TO BE LANDSCAPED SHALL BE SMOOTHED AND LEFT TO THE GRADES INDICATED ON THE GRADING PLAN, PLUS OR MINUS 0.1 FOOT.
   b. ALL DISTURBED AREAS NOT TO BE LANDSCAPED SHALL BE SEEDED PER EROSION CONTROL NOTES ON APPROVED GRADING PERMIT SET.
   c. ALL EXCESS/EXTRA MATERIAL SHALL BE REMOVED FROM THE SITE.
6. ANY CHANGES FROM THE APPROVED PLANS SHALL BE REQUESTED BY THE CONTRACTOR IN WRITING. THE DESIGN ENGINEER AND THE CITY OF WEST LINN'S PROJECT ENGINEER MUST APPROVE THE CHANGE PRIOR TO ITS IMPLEMENTATION. COMPLEXITY OF MODIFICATION WILL DETERMINE IF REVISED PLANS ARE REQUIRED.
7. CITY OF WEST LINN DETAILS SHALL BE USED AT LOCATIONS AS SPECIFIED IN THE PLANS, SEE DETAIL SHEETS.
8. DURING CONSTRUCTION, ALL EROSION CONTROL MEASURES SHALL CONFORM TO CLACKAMAS COUNTY EROSION CONTROL STANDARDS AND WILL BE STRICTLY ENFORCED.
9. IN CASE OF A DISCREPANCY BETWEEN THE DRAWINGS AND THE FIGURES WRITTEN THEREON, THE FIGURES SHALL BE DEEMED TO GOVERN.
10. THE OWNER WILL SUPPLY ONE SET OF STAKES FOR EACH CONSTRUCTION OPERATION AS DESCRIBED IN THE CONTRACT DOCUMENTS AND SPECIFICATIONS. THE CONTRACTOR SHALL DESIGNATE A REPRESENTATIVE OR REPRESENTATIVES WHO ARE AUTHORIZED TO REQUEST STAKES. STAKING REQUESTS FROM AUTHORIZED REPRESENTATIVE SHALL BE MADE TO DAVE LIDEN AT OTAK (503-699-2401) AT LEAST 48 HOURS IN ADVANCE OF THE NEED FOR SAID STAKES. ONLY REQUESTS FROM AUTHORIZED REPRESENTATIVES WILL BE HONORED. ANY RESTAKING WILL BE DONE AT THE EXPENSE OF THE CONTRACTOR.
12. WEEK DAY WORK HOURS ARE 7:00 AM TO 6:00 PM; SATURDAY, SUNDAY AND HOLIDAY WORK HOURS ARE LIMITED TO 9:00 AM TO 6:00 PM.
13. THE CITY OF WEST LINN SHALL BE PRESENT WHEN TESTING IS PERFORMED AND SUPPLIED WITH A COPY OF TEST RESULTS. ALL FACILITIES WILL BE ACCEPTED BY THE CITY PRIOR TO CONNECTION TO EXISTING SYSTEMS.
15. THE CONTRACTOR SHALL REMOVE ALL SOFT OR OTHERWISE UNSUITABLE MATERIAL AT SUBGRADE AND REPLACE WITH APPROVED MATERIAL. THE CONTRACTOR SHALL COMPACT TO A LINE ONE FOOT BEHIND THE CURB.
16. FINAL SUBGRADE PROOF-ROLL WITH 10 CY TRUCK LOADED WITH ROCK IS REQUIRED PRIOR TO PLACING AGGREGATE BASE.
17. FINAL BASE ROCK PROOF ROLL WITH 10 CY TRUCK LOADED WITH ROCK IS REQUIRED PRIOR TO PAVING. BASE ROCK TO BE COMPACTED TO 95 PERCENT RELATIVE MAXIMUM DENSITY ACCORDING TO AASHTO T-180 STANDARDS.
18. PLEASE NOTE CITY OF WEST LINN STANDARD CONSTRUCTION SPECIFICATION SECTION 505.03.11 FOR WEATHER RELATED LIMITATIONS ON THE PLACEMENT OF ASPHALTIC CONCRETE.
19. THE DENSITY OF THE COMPACTED BASE LIFT OF AC SHALL BE AT LEAST 92% OF RICE IN CONFORMANCE WITH AASHTO T209 AS MODIFIED BY THE OREGON STATE HIGHWAY DEPARTMENT.
20. THE DENSITY OF THE COMPACTED TOP LIFT OF AC SHALL BE AT LEAST 92% OF RICE IN CONFORMANCE WITH AASHTO T209 AS MODIFIED BY THE OREGON STATE HIGHWAY DEPARTMENT.
21. DENSITY TESTS WILL BE REQUIRED PER CITY OF WEST LINN STANDARD CONSTRUCTION SPECIFICATIONS. COPIES OF ALL REPORTS ARE TO BE SUPPLIED TO THE CITY INSPECTOR AND DESIGN ENGINEER.
22. CONTRACTOR SHALL SUBMIT SCHEDULE DETAILING SEQUENCE OF CONSTRUCTION PRIOR TO THE PRE-CONSTRUCTION MEETING.

BENCHMARK

ELEVATION DATUM IS BASED ON AN ALUMINUM CAP AT THE CENTERLINE INTERSECTION OF BEACON HILL DRIVE AND BEACON HILL COURT. ELEVATION = 476.40.

LOCATING EXISTING UTILITIES

--- 48 HOUR NOTICE REQUIRED PRIOR TO EXCAVATION ---

ONE CALL SYSTEM (GENERAL TELEPHONE, NORTHWEST NATURAL GAS, U.S. WEST, U.S. SPRINT)	(503) 246-6699
PORTLAND GENERAL ELECTRIC	(503) 643-5454, EXT. 312, 313, 314
TCI CABLE TELEVISION	243-7491
REPAIR EMERGENCIES	
NORTHWEST NATURAL GAS	(503) 226-4211, EXT. 4413
CITY OF WEST LINN	
WATER OPERATIONS	(503) 656-3535
SANITARY SEWER OPERATIONS	

THE CONTRACTOR, IN LOCATING AND PROTECTING UNDERGROUND UTILITIES, MUST COMPLY WITH THE REGULATIONS OF O.R.S. 757.541 TO 757.571

ATTENTION EXCAVATORS: Oregon law requires you to follow rules adopted by the Oregon Utility Notification Center. Those rules are set forth in OAR 952-001-0010 through OAR 952-001-0090. You may obtain copies of these rules from the Center by calling (503) 232-1987. If you have any questions about the rules, you may contact the call Center. YOU MUST NOTIFY THE CENTER AT LEAST 2 BUSINESS DAYS, BUT NOT MORE THAN 10 BUSINESS DAYS, BEFORE COMMENCING AN EXCAVATION. CALL (503) 246-6699.

STORM DRAIN NOTES

U1. MANHOLE CONSTRUCTION SHALL BE IN ACCORDANCE WITH THE CITY OF WEST LINN'S PUBLIC WORKS STANDARDS. MANHOLES SHALL CONFORM TO ASTM C-478.
U2. TRENCH BEDDING, PIPE ZONE AND BACKFILL IN PAVED AREAS WILL BE 3/4-INCH MINUS CRUSHED AGGREGATE COMPACTED TO 95 PERCENT RELATIVE MAXIMUM DENSITY, AASHTO T-180. UNPAVED AREAS OUTSIDE ROW TO BE CLASS A NATIVE BACKFILL MATERIAL (SEE WEST LINN DETAIL WL-200 ON SHEET C5.1) UNLESS OTHERWISE NOTED. CLASS A NATIVE BACKFILL TO BE COMPACTED TO A MINIMUM OF 95 PERCENT OF THE MAXIMUM DRY DENSITY, AASHTO T-180.
U3. ALL PUBLIC STORM DRAINS SHALL BE CONSTRUCTED WITH CONCRETE, PVC D 3034, OR HDPE SMOOTH INTERIOR, CORRUGATED EXTERIOR PIPE AS SPECIFIED IN DIVISION SIX - STORM DRAIN TECHNICAL REQUIREMENTS, OF THE WEST LINN PUBLIC WORKS STANDARD CONSTRUCTION SPECIFICATIONS.
U4. ALL PUBLIC STORM STORM SEWERS SHALL BE TV AND DEFLECTION TESTED PER THE CITY OF WEST LINN'S REQUIREMENTS.
U5. CONSTRUCTION NOTES FOR STORM SEWER ARE ON SHEET H3.0.

WATER NOTES

W1. ALL WATER PIPE AND FITTINGS SHALL BE DUCTILE IRON CLASS 52 AND CONFORM TO STANDARD CITY SPECIFICATIONS AND DETAILS. ALL WATER SERVICE LINES TO BE TYPE K COPPER PIPE PER CITY OF WEST LINN SPECIFICATIONS.
W2. WATERLINES SHALL BE PRESSURE TESTED FOLLOWING COMPLETION. PRESSURE TESTS SHALL BE IN ACCORDANCE TO THE CITY OF WEST LINN'S STANDARDS WITH A MINIMUM TEST PRESSURE OF 180 PSI. WHEN THE PRESSURE TEST IS PERFORMED, THE TEST PRESSURE OF 180 PSI SHALL STABILIZE BEFORE THE TEST BEGINS. SERVICE LINES WILL ALSO BE TESTED TO THE METER LOCATION .
W3. PRIOR TO BEING PLACED INTO SERVICE, THE WATERLINE SHALL BE FLUSHED, STERILIZED AND FLUSHED AGAIN ALL IN ACCORDANCE WITH STANDARD METHODS OF THE HEALTH DIVISION, DEPARTMENT OF HUMAN RESOURCES, STATE OF OREGON.
W4. PRIOR TO CONNECTION TO EXISTING WATERLINE, A SAMPLE SHALL BE TAKEN AND TESTED FOR BACTERIOLOGICAL QUALITY. RESULTS MUST BE WITHIN STANDARDS OF THE STATE OF OREGON.
W5. CONCRETE THRUST BLOCKING SHALL BE PROVIDED AT ALL WATERLINE FITTINGS AS REQUIRED BY CITY STANDARDS. BLOCKING SHALL BE 3000 PSI CONCRETE PLACED AGAINST UNDISTURBED EARTH AND CLEAR OF JOINT ACCESSORIES. BEARING AREA OF THRUST BLOCK SHALL BE COMPUTED ON THE BASIS OF ALLOWABLE SOIL BEARING PRESSURE. ALL PIPE FITTINGS IN CONTACT WITH CONCRETE SHALL BE WRAPPED IN PLASTIC.
W6. MINIMUM COVER OVER WATERLINES IS TO BE 36" AS MEASURED FROM FINISH GRADE TO TOP OF PIPE. MINIMUM VERTICAL SEPARATION BETWEEN WATERLINE AND SANITARY SEWER AT A CROSSING IS 18". SANITARY SEWER AT WATERLINE CROSSINGS WITH LESS THAN THE MINIMUM VERTICAL SEPARATION SHALL BE CONSTRUCTED OF DUCTILE IRON PIPE WITH WATERTIGHT JOINTS. IN SUCH CASES THE 18-FOOT LENGTH OF SANITARY SEWER SHALL BE CENTERED AT THE CROSSING.
W7. TRENCH BEDDING, PIPE ZONE AND BACKFILL IN PAVED AREAS WILL BE 3/4-INCH MINUS CRUSHED AGGREGATE COMPACTED TO 95 PERCENT RELATIVE MAXIMUM DENSITY, AASHTO T-180. UNPAVED AREAS OUTSIDE ROW TO BE CLASS A NATIVE BACKFILL MATERIAL (SEE WEST LINN DETAIL WL-200 ON SHEET SC-12) UNLESS OTHERWISE NOTED. CLASS A NATIVE BACKFILL TO BE COMPACTED TO A MINIMUM OF 95 PERCENT OF THE MAXIMUM DRY DENSITY, AASHTO T-180.
W8. ALL WATERLINE PRESSURE AND CHLORINATION TESTING SHALL BE PERFORMED WITH THE CITY PRESENT.
W9. CONSTRUCTION NOTES OF WATERLINE ARE ON SHEET H4.0 .

VICINITY MAP

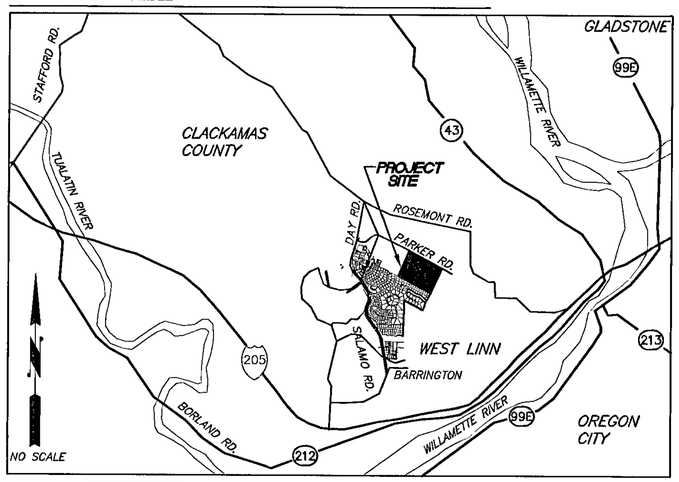

SHEET INDEX

H1.0 COVER SHEET, PROJECT MAP, VICINITY MAP, PROJECT TEAM
H2.0 STREET PLAN AND PROFILE
H3.0 STORM DRAIN PLAN AND PROFILE
H3.1 STORM WATER QUALITY AND DETENTION FACILITY
H4.0 WATER LINE PLAN AND PROFILE
H5.0 DETAIL SHEET
H5.1 DETAIL SHEET
H5.2 DETAIL SHEET

APPLICANT

Name: Centex Homes
4000 Kruse Way Place
Building 2, Suite #300
Lake Oswego, Oregon 97035
Contact: David Cady
Phone: (503) 699-9660 x225
Fax: (503) 699-9739

CIVIL ENGINEER/SURVEYOR

Name: Otak Incorporated
17355 S.W. Boones Ferry Road
Lake Oswego, Oregon 97035
Contact: Scott Shumaker
Phone: (503) 635-3618
Fax: (503) 635-5395

GEOTECHNICAL ENGINEER

Name: Northwest Geotech, Inc.
9120 SW Pioneer Court, Suite B
Wilsonville, Oregon 97070
Contact: Wayne Olsen
Phone: (503) 682-1880
Fax: (503) 682-2753

TYPICAL SECTION

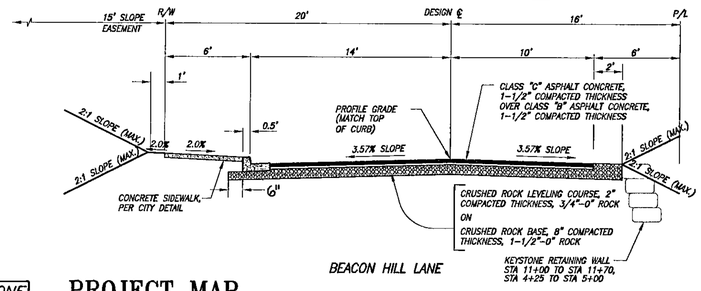

PROJECT MAP

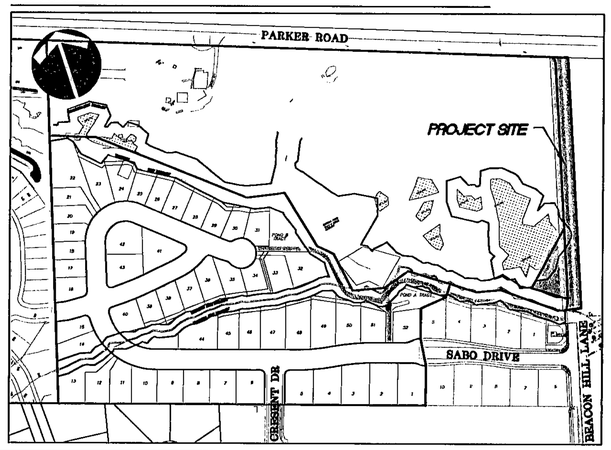

XXX
Date
SAS
Designed
KJM
Drawn
SAS 7-19-01
Checked By Date

REGISTERED PROFESSIONAL ENGINEER 38,361 OREGON JULY 11, 2000 SCOTT SHUMAKER
EXPIRES: 06/30/2002

CENTEX HOMES
4000 Kruse Way Place
Building 2, Suite # 300
Lake Oswego, Oregon 97035
Phone: (503) 699-9660
Fax: (503) 699-9739

PERMIT SUBMITTAL JULY 19 2001

Rogerfield II
Beacon Hill Lane
CITY OF WEST LINN, OREGON
COVER SHEET

otak Incorporated
17355 SW Boones Ferry Road
Lake Oswego, OR 97035-5217
Phone: (503) 635-3618
FAX: (503) 635-5395

10822
Project No.
D822H10
File No.
H1.0
Sheet No.

Copyright 2001 ©

8 SHEETS

L: \ KRISTEN\ 07/18/2001 11:52am -- S:\PROJECT\10800\10822\DWG\D822H10.DWG

XREF LIST
Ltscale: 1
Resolved
D822X006
D822x190
D822x230
D822x400
D822x430
D822x600
D822x900

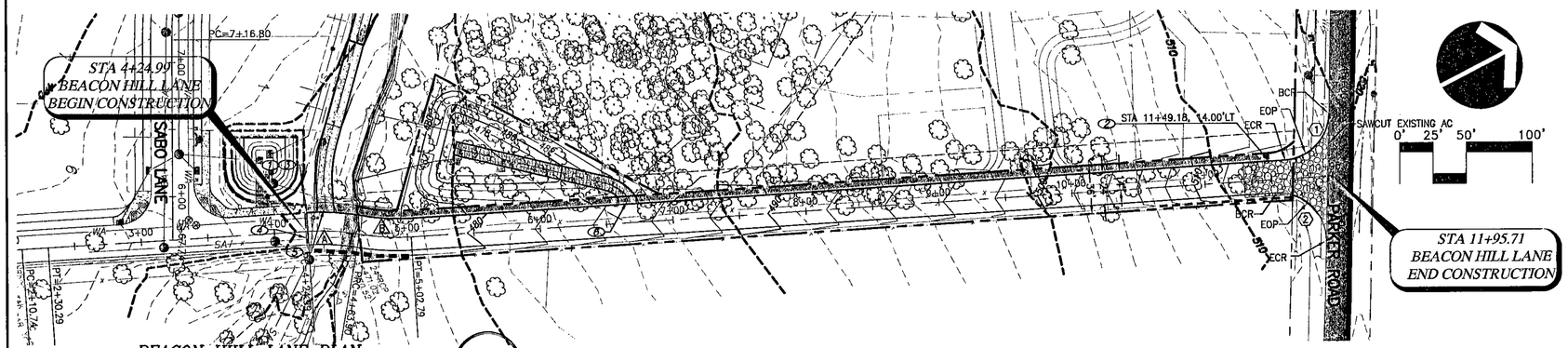

BEACON HIILL LANE PLAN

SCALE: 1"=50' HORZ.

1 H2.0

GENERAL NOTES

1. ALL WORK IN THE PUBLIC RIGHT-OF-WAY SHALL CONFORM TO CURRENT CITY OF WEST LINN STANDARD DRAWINGS AND SPECIFICATIONS.
2. EROSION CONTROL MUST BE INSTALLED AND MAINTAINED PER THE APPROVED EROSION CONTROL PLANS.
3. STATIONING IS FROM ROAD CENTERLINE UNLESS OTHERWISE NOTED.
4. ALL TREES WITHIN THE PUBLIC RIGHT-OF WAY SHALL BE REMOVED AND DISPOSED OF OFF-SITE AT A LEGAL DUMP SITE.
5. CONSTRUCT ROADS PER DESIGNATED SECTION ON SHEET H1.0
6. SIDEWALK BENCHES SHALL BE INCLUDED IN ALL STREET EXCAVATION OR EMBANKMENT UNLESS OTHERWISE SPECIFIED OR APPROVED BY CITY ENGINEER.

CONSTRUCTION KEYNOTES

1. BEGIN CURB AND GUTTER PER DETAIL WL-501
2. END CURB AND GUTTER AND SIDEWALK
3. BEGIN SIDEWALK PER DETAIL WL-508
4. REMOVE EXISTING BARRICADES
5. CONSTRUCT 12' WIDE DRIVEWAY PER WL-503
6. CONSTRUCT 13' WIDE DRIVEWAY PER WL-503

EOP RETURN CURVE DATA

CURVE	BCR STR. STA.	BCR OFFSET	ECR STR. STA.	ECR OFFSET	ALIGNMENT
1	46+23.67	4.44'R	11+60.25	14.00'L	PARKER, BEACON HILL
2	11+52.83	10.00'R	47+18.42	14.18'R	BEACON HILL, PARKER

EOP CURVE DATA

CURVE	LENGTH	RADIUS	DELTA
1	52.42'	35.00'	85°48'29"
2	57.95'	35.00'	94°51'43"

EOP RETURN VERTICAL DATA

CURVE	TOP OF AC ELEVATIONS BCR	1/4 PT.	1/2 PT.	3/4 PT.	ECR
1	519.0*	518.23	517.18	516.10	515.21
2	515.41	516.08	516.18	515.90	515.4*

* MATCH EXISTING PAVEMENT

CL CURVE DATA

CURVE	LENGTH	RADIUS	DELTA
A	38.91'	165.00'	13°30'35"
B	38.89'	165.00'	13°30'18"

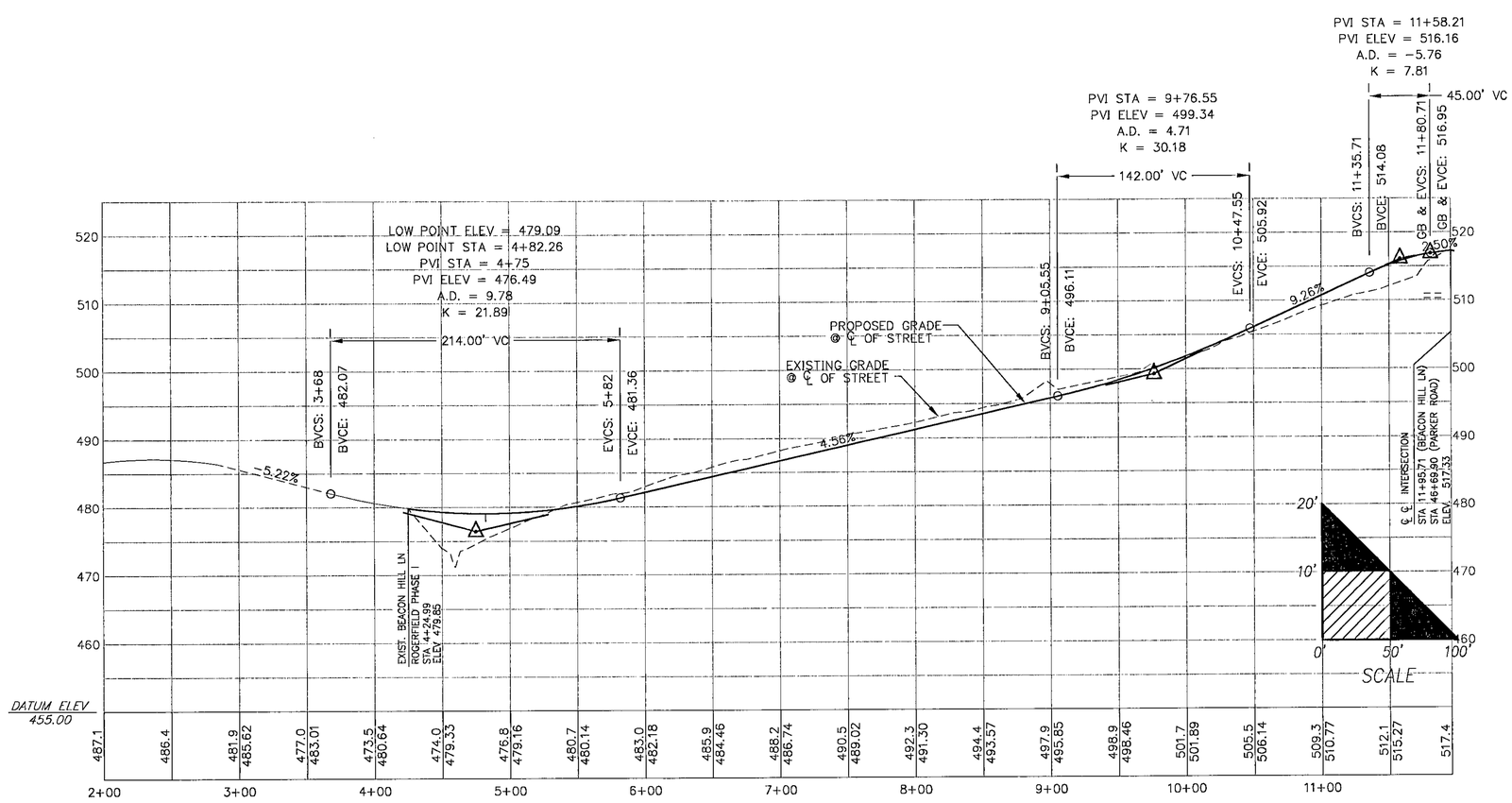

BEACON HIILL LANE PROFILE

SCALE: 1"=50' HORZ.
1"=10' VERT.

2 H2.0

XXX
Date
SAS
Designed
KJM
Drawn
SAS 7-19-01
Checked By Date

REGISTERED PROFESSIONAL ENGINEER 58,361 OREGON MAY 11, 2000 SCOTT SHUMAKER
EXPIRES: 06/30/2002

CENTEX HOMES
4000 Kruse Way Place
Building 2, Suite # 300
Lake Oswego, Oregon 97035
Phone: (503) 699-9660
Fax: (503) 699-9739

PERMIT SUBMITTAL JULY 19 2001

Rogerfield II

Beacon Hill Lane
CITY OF WEST LINN, OREGON
STREET PLAN AND PROFILE
BEACON HILL LANE (ROAD H)

otak Incorporated
17355 SW Boones Ferry Road
Lake Oswego, OR 97035-5217
Phone: (503) 635-3618
FAX: (503) 635-5395

10822
Project No.
D822H20
File No.
H2.0
Sheet No.

Copyright 2001 ©

FL : KRISTEN1 07/18/2001 11:55am --> H:\PROJECT\10800\10822\DWG\D822H20.DWG

XREF LIST
Ltscale: 1
Resolved
D822X006
D822x190
D822x230
D822x600
D822x900
D822x901

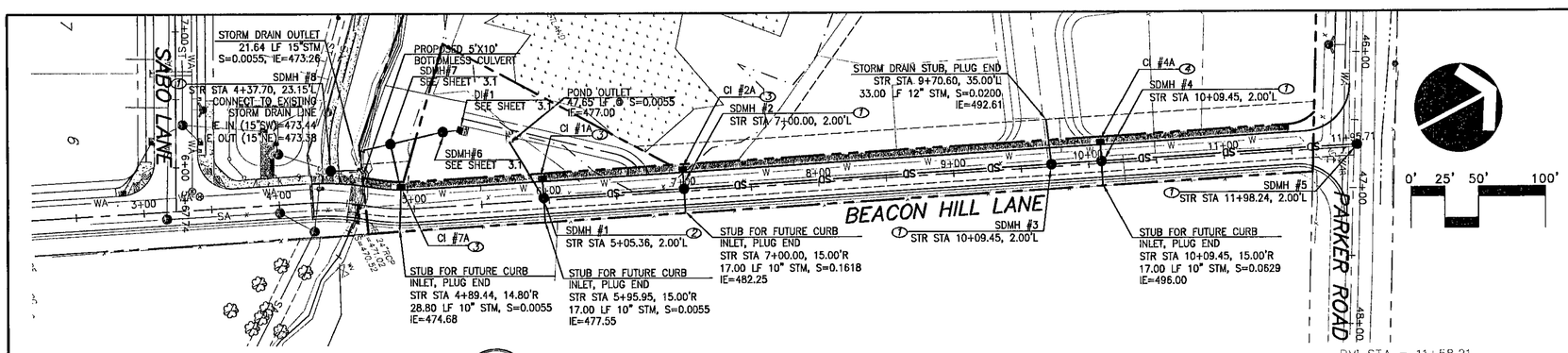

BEACON HIILL LANE PLAN

1 / H3.0

SCALE: 1"=50' HORZ.

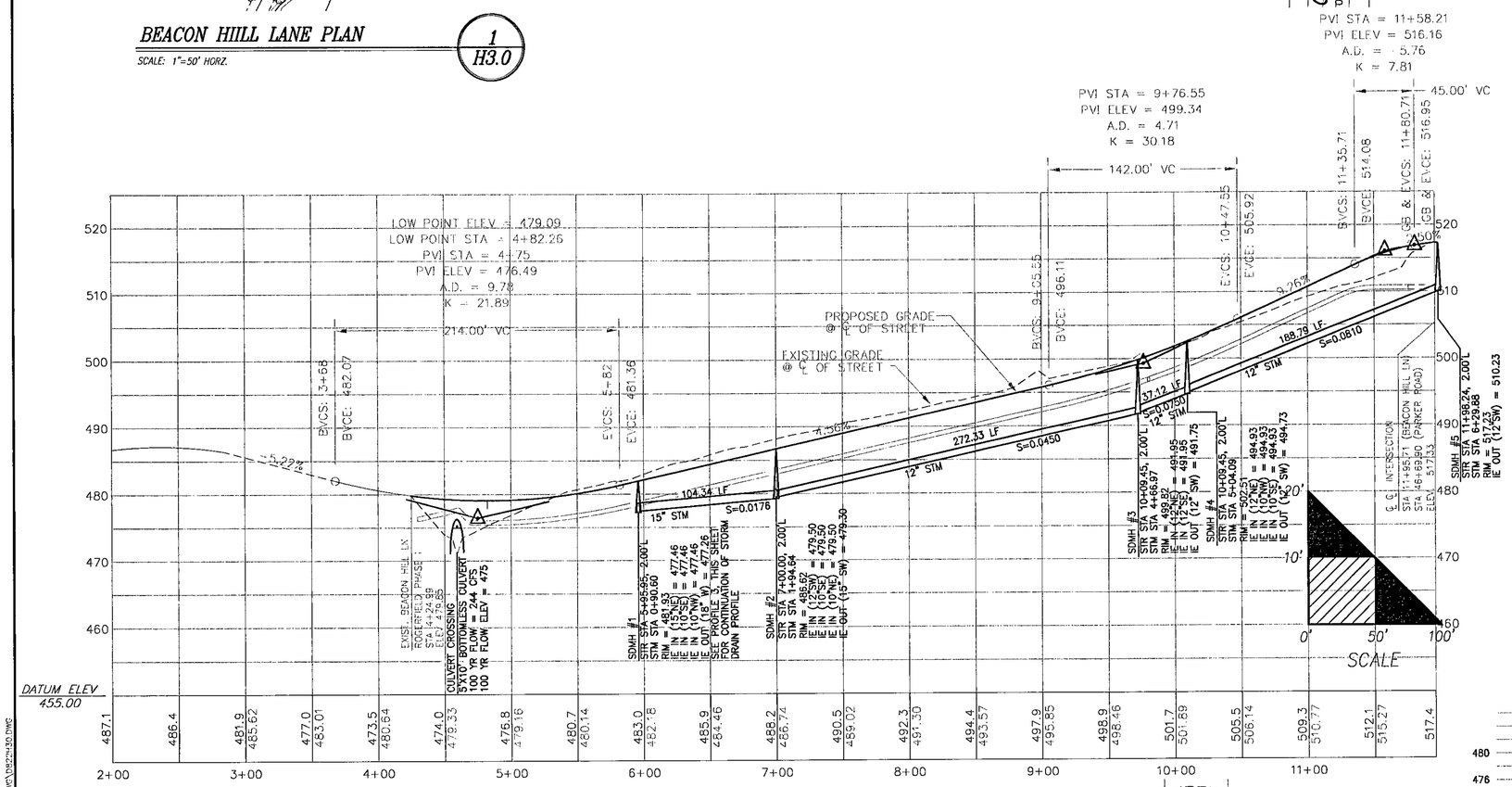

BEACON HILL LANE STORM LINE

2 / H3.0

SCALE: 1"=50' HORZ.
1"=10' VERT.

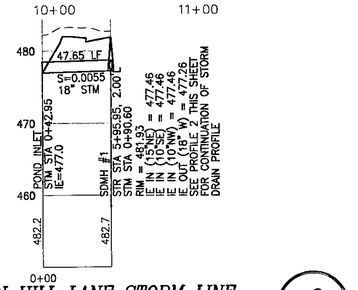

BEACON HILL LANE STORM LINE

3 / H3.0

SCALE: 1"=50' HORZ.
1"=10' VERT.

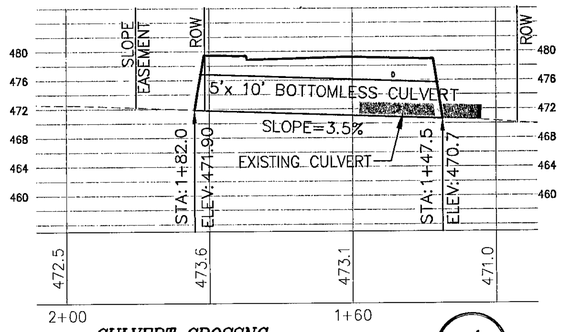

CULVERT CROSSNG

4 / H3.0

SCALE: 1"=10' HORZ.
1"=10' VERT.

LEGEND

EXISTING

- WA — WATER LINE
- SA — SANITARY SEWER LINE
- ST — STORM SEWER LINE
- SANITARY SEWER MANHOLE
- STORM DRAIN INLET
- GATE VALVE
- FIRE HYDRANT

PROPOSED

- SD — STORM SEWER LINE
- STORM SEWER MANHOLE
- STORM SEWER CURB INLET
- STORM SEWER DITCH INLET
- STORM SEWER OUTFALL
- SD — CULVERT CROSSING
- SS — SANITARY SEWER LINE
- SANITARY SEWER MANHOLE
- W — WATER MAIN LINE
- WATER METER
- FIRE HYDRANT ASSEMBLY
- WATER VALVE
- WATER BLOW-OFF ASSEMBLY
- AIR RELEASE VALVE

STORM DRAIN NOTES

1. ALL WORK IN THE PUBLIC RIGHT-OF-WAY AND CITY UTILITY EASEMENTS SHALL CONFORM TO THE CURRENT CITY OF WEST LINN STANDARD DRAWINGS AND SPECIFICATIONS.
2. EROSION CONTROL MUST BE INSTALLED AND MAINTAINED PER THE APPROVED EROSION CONTROL PLANS.
3. STATIONING IS FROM STREET CENTERLINE UNLESS OTHERWISE NOTED.
4. ONCE CURB INLET IS INSTALLED, BIO BAGS SHOULD BE INSTALLED AT ONCE.
5. CONSTRUCT DESIGNATED SIZE STORM DRAIN PER CITY OF WEST LINN STANDARDS. USE CLASS B BACKFILL, OR AS DESIGNATED ON PROFILE.
6. MANHOLE RIM ELEVATIONS SHOWN ARE APPROXIMATE AND FOR INFORMATION ONLY. FINAL ELEVATIONS SHALL BE SET TO MATCH CONSTRUCTED FINISH GRADE.

CONSTRUCTION NOTES

1. CONSTRUCT STORM DRAIN MANHOLE PER CITY OF WEST LINN DETAIL WL-207
2. CONSTRUCT POLLUTION CONTROL MH PER CITY OF WEST LINN DETAIL WL-607
3. CONSTRUCT GUTTER INLET PER CITY OF WEST LINN DETAIL WL-600.
4. CONSTRUCT COMBINATION CURB INLET PER CITY OF WEST LINN DETAIL WL-601

CURB INLET/ CATCH BASIN TABLE

CI/CB #	ALIGN.	STR. STA.	OFFSET TO F.O.C.	T.O.C. ELEV.	I.E. OUT	PIPE DIA.	PIPE LENGTH	PIPE SLOPE
1A	BEACON	5+95.95	14' LT	482.00	477.57	10"	12.00 LF	0.0055
2A	BEACON	7+00.00	14' LT	286.89	482.39	10"	12.00 LF	0.2408
4A	BEACON	10+09.95	14' LT	502.67	498.17	10"	12.00 LF	0.2700
7A	BEACON	4+89.99	14' LT	479.11	474.32	12"	34.53 LF	0.0055

XXX
Date
SAS
Designed
KJM
Drawn
SAS 7-19-01
Checked By Date

REGISTERED PROFESSIONAL ENGINEER 58,361 OREGON JULY 11, 2000 SCOTT SHUMAKER

EXPIRES: 06/30/2002

CENTEX HOMES
4000 Kruse Way Place
Building 2, Suite # 300
Lake Oswego, Oregon 97035
Phone: (503) 699-9660
Fax: (503) 699-9739

Rogerfield II

Beacon Hill Lane
CITY OF WEST LINN, OREGON

STORM DRAIN PLAN AND PROFILE
BEACON HILL LANE (ROAD H)

PERMIT SUBMITTAL JULY 19 2001

otak Incorporated
17355 SW Boones Ferry Road
Lake Oswego, OR 97035-5217
Phone: (503) 635-3618
FAX: (503) 635-5395

10822
Project No.
D822H30
File No.
H3.0
Sheet No.

Copyright 2001 ©

FL: KRISTEN1 07/18/2001 1:41pm --> H:\PROJECT\1080\1D822\DWG\D822H30.DWG

XREF LIST
Ltscale: 20
Resolved
D822X005
D822x190
D822x230
D822x400
D822x430
D822x600
D822x900

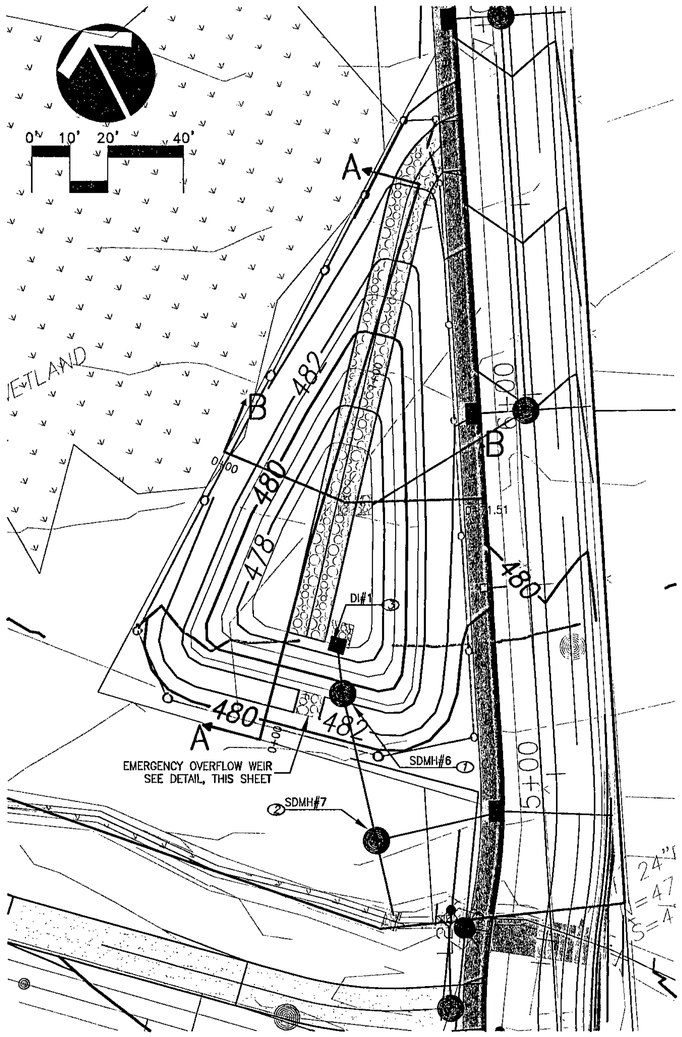

WATER QUALITY AND DETENTION POND 1 H3.1

SCALE: 1"=20' HORZ.

CONSTRUCTION NOTES

1. CONSTRUCT STORM DRAIN MANHOLE PER CITY OF WEST LINN DETAIL WL-207
2. CONSTRUCT SHALLOW MANHOLE PER CITY OF WEST LINN DETAIL WL-208
3. CONSTRUCT DITCH INLET PER CITY OF WEST LINN DETAIL WL-603

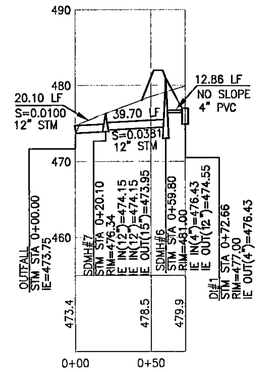

STORM DRAIN POND OUTFALL 2 H3.1

SCALE: 1"=50' HORZ.
1"=10' VERT.

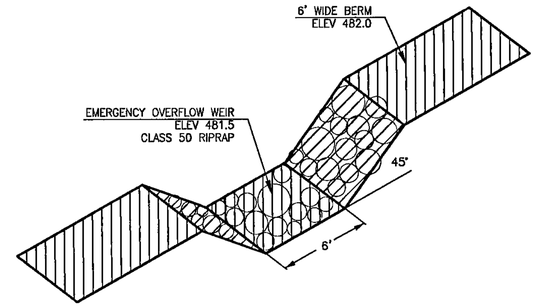

EMERGENCY OVERFLOW WEIR 3 C4.5

SCALE: NTS

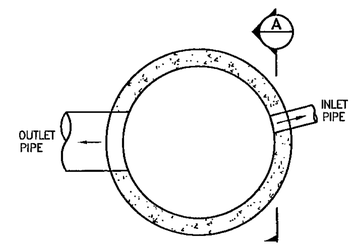

TYPICAL PLAN VIEW

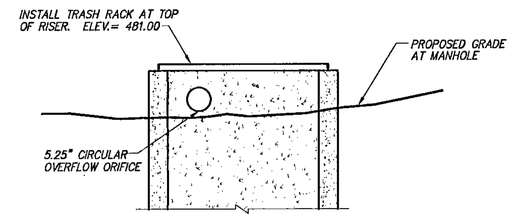

TYPICAL SECTION A-A

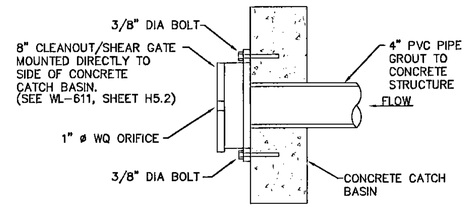

SHEAR GATE NOTES:
1. NEOPRENE RUBBER GASKET REQUIRED BETWEEN GATE FLANGE AND CONCRETE CATCH BASIN.
2. CLEANOUT/SHEAR GATE TO HAVE LIFT HANDLE (SEE WL-611, SHEET H5.0) ATTACHED WITH GALVANIZED CHAIN TO TOP OF CATCH BASIN.
3. FLANGE MOUNTING BOLTS SHALL BE 3/8" DIA STAINLESS STEEL.

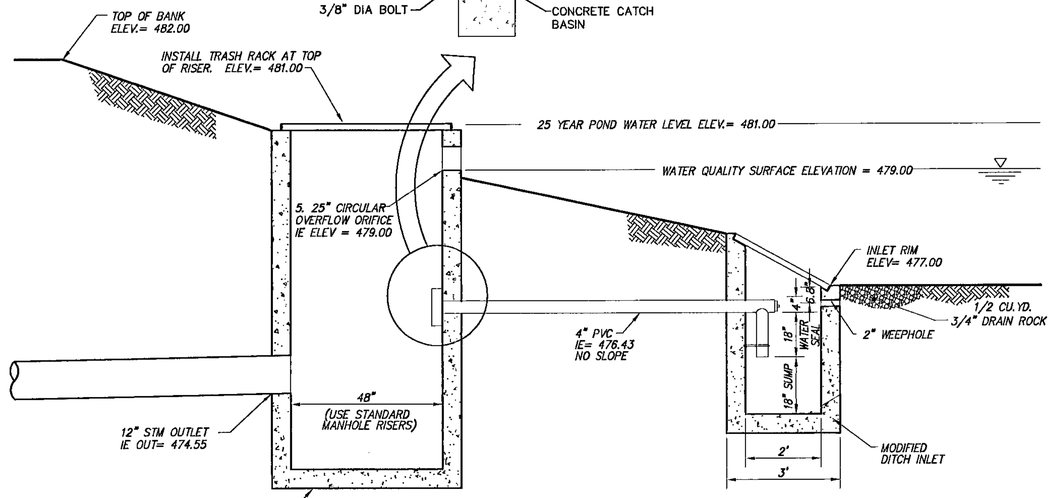

POND B OUTLET STRUCTURE 6 H3.1

SCALE: NTS

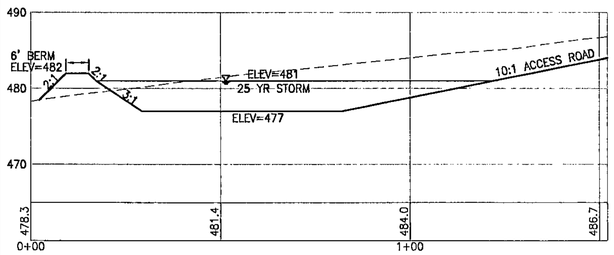

SECTION A-A 4 H3.1

SCALE: 1"=10' HORZ.
1"=10' VERT.

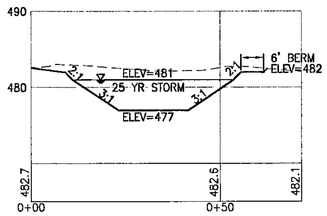

SECTION B-B 5 H3.1

SCALE: 1"=10' HORZ.
1"=10' VERT.

JULY 11, 2001
Date
SAS
Designed
KM, TR, SR
Drawn
SAS 7-19-01
Checked By Date

REGISTERED PROFESSIONAL ENGINEER
58,361
OREGON
JULY 11, 2001
SCOTT SHUMAKER
EXPIRES: 06/30/2002

CENTEX HOMES
4000 Kruse Way Place
Building 2, Suite # 300
Lake Oswego, Oregon 97035
Phone: (503) 699-9660
Fax: (503) 699-9739

Rogerfield Phase II-52 Lots

CITY OF WEST LINN, OREGON
STORM WATER QUALITY AND DETENTION FACILITY

PERMIT SUBMITTAL JULY 19, 2001

otak
Incorporated
17355 SW Boones Ferry Road
Lake Oswego, OR 97035-5217
Phone: (503) 635-3618
FAX: (503) 635-5395

10822
Project No.
D822H31
File No.
H3.1
Sheet No.

Copyright 2001 ©

L:\KRISTEN\ 07/18/2001 11:57am --> H:\PROJECT\10800\10822\DWG\D822H31.DWG

XREF LIST
Ltscale: 1
Resolved
D822X006
D822x190
D822x230
D822x600
D822x900

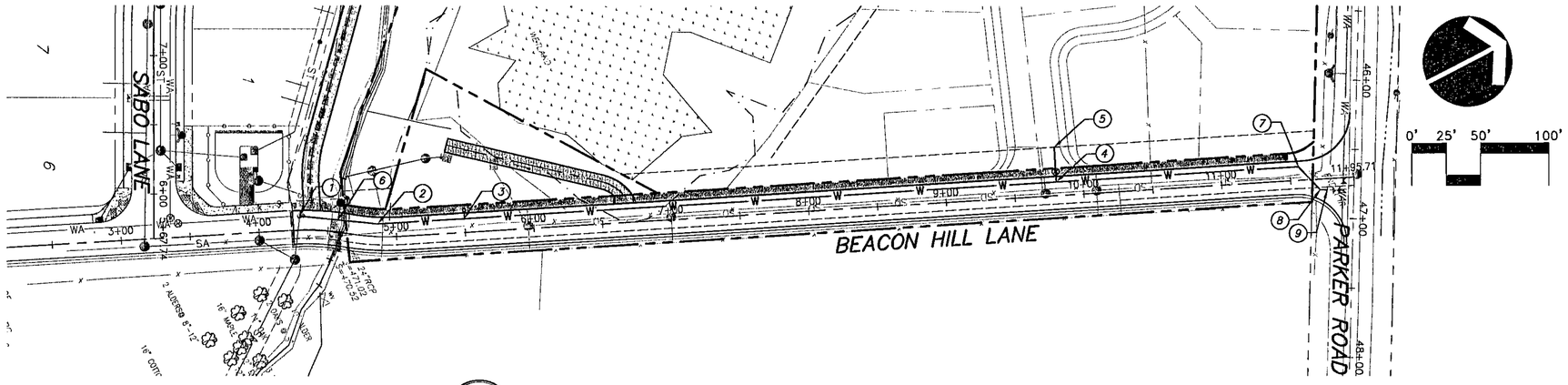

BEACON HIILL LANE PLAN

SCALE: 1"=50' HORZ.
1"=10' VERT.

1 / H4.0

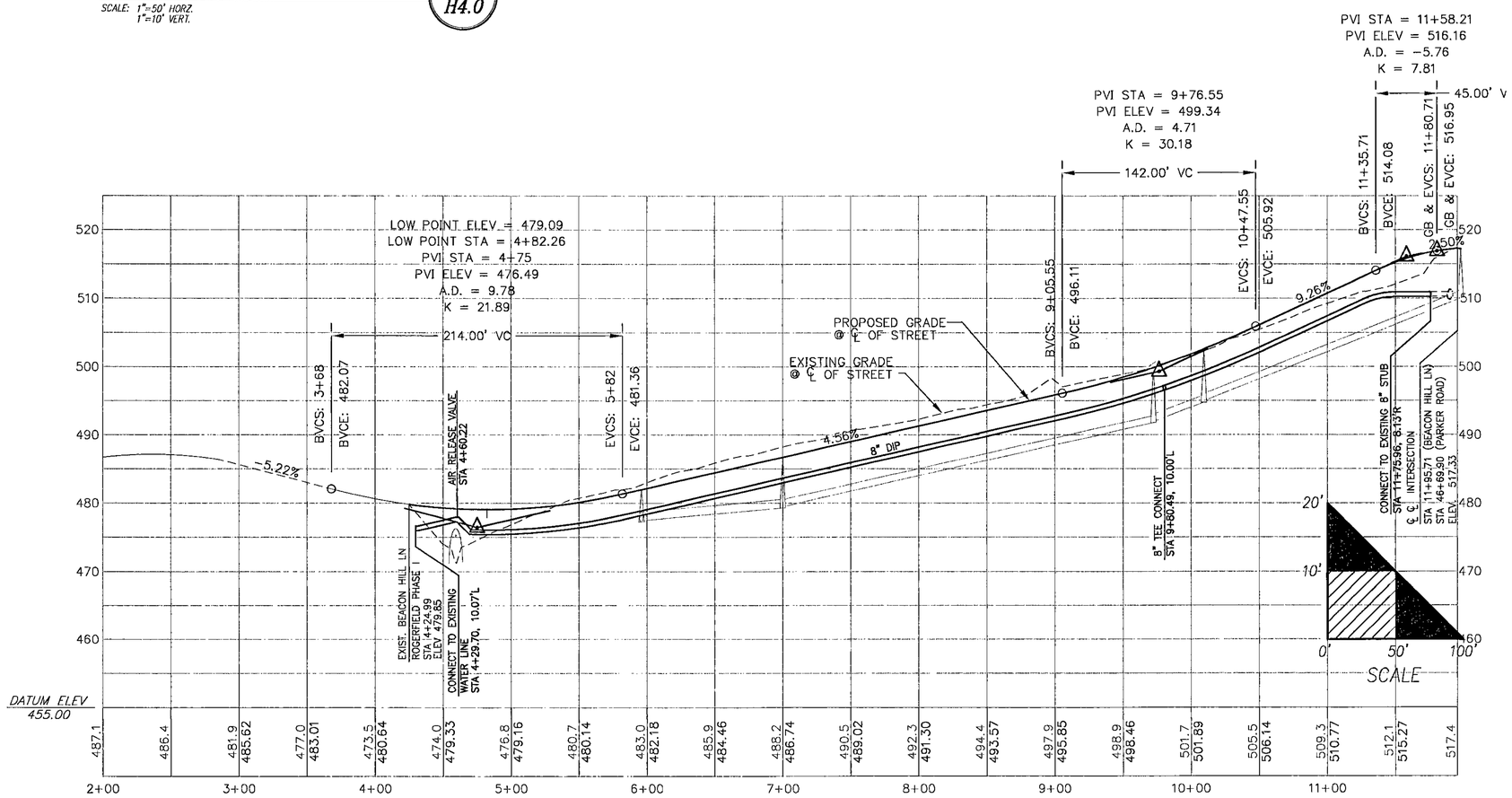

BEACON HIILL LANE PROFILE

SCALE: 1"=50' HORZ.
1"=10' VERT.

2 / H4.0

LEGEND

EXISTING

- WA — WATER LINE
- SA — SANITARY SEWER LINE
- ST — STORM SEWER LINE
- SANITARY SEWER MANHOLE
- STORM DRAIN INLET
- GATE VALVE
- FIRE HYDRANT

PROPOSED

- SD — STORM SEWER LINE
- STORM SEWER MANHOLE
- STORM SEWER CURB INLET
- STORM SEWER DITCH INLET
- STORM SEWER OUTFALL
- SD — CULVERT CROSSING
- SS — SANITARY SEWER LINE
- SANITARY SEWER MANHOLE
- W — WATER MAIN LINE
- WATER METER
- FIRE HYDRANT ASSEMBLY
- WATER VALVE
- WATER BLOW-OFF ASSEMBLY
- AIR RELEASE VALVE
- ROCKERY WALL

WATER LINE CONSTUCTION NOTES

1. STA 4+29.70, 10.07'LT REMOVE EXISTING BLOWOFF ASSEMBLY, CONNECT TO EXISTING 8" WATER LINE
2. STA 4+86.04, 9.20'LT DEFLECT WATER LINE 9°12'25"
3. STA 5+50.00, 10.00' LT INSTALL 1-1/2" WATER SERVICE PER DETAIL WL-403
4. STA 9+80.49, 10.00' LT INSTALL 8"x 8" TEE WITH THRUST BLOCK 1- 8" GATE VALVE
5. STA 9+80.49, 35.00'LT INSTALL BLOWOFF ASSEMBLY IE AT END = 497.07
6. STA 4+56.41, 8.62'LT INSTALL AIR RELEASE VALVE DETAIL WL-405
7. STA 11+56.32, 10.00'LT INSTALL 45° BEND DEFLECT WATERLINE 5°18'36"
8. STA 11+88.92, 10.00'LT INSTALL 45° BEND
9. STA 11+75.96, 8.13'RT CONNECT TO EXISTING 8" STUB

XXX
Date
SAS
Designed
KJM
Drawn
SAS 7-19-01
Checked By Date

REGISTERED PROFESSIONAL ENGINEER 58,361 OREGON JULY 11, 2000 SCOTT SHUMAKER
EXPIRES: 06/30/2002

CENTEX HOMES
4000 Kruse Way Place
Building 2, Suite # 300
Lake Oswego, Oregon 97035
Phone: (503) 699-9660
Fax: (503) 699-9739

Rogerfield II

Beacon Hill Lane
CITY OF WEST LINN, OREGON

WATER LINE PLAN AND PROFILE
BEACON HILL LANE (ROAD H)

JULY 19 2001

PERMIT SUBMITTAL

otak Incorporated
17355 SW Boones Ferry Road
Lake Oswego, OR 97035-5217
Phone: (503) 635-3618
FAX: (503) 635-5395

10822
Project No.
D822H40
File No.
H4.0
Sheet No.

Copyright 2001 ©

L: KRISTEN 07/18/2001 11:58am --> H:\PROJECT\10800\10822\DWG\D822H40.DWG

XREF LIST
Ltscale: 40
Resolved
D822X005

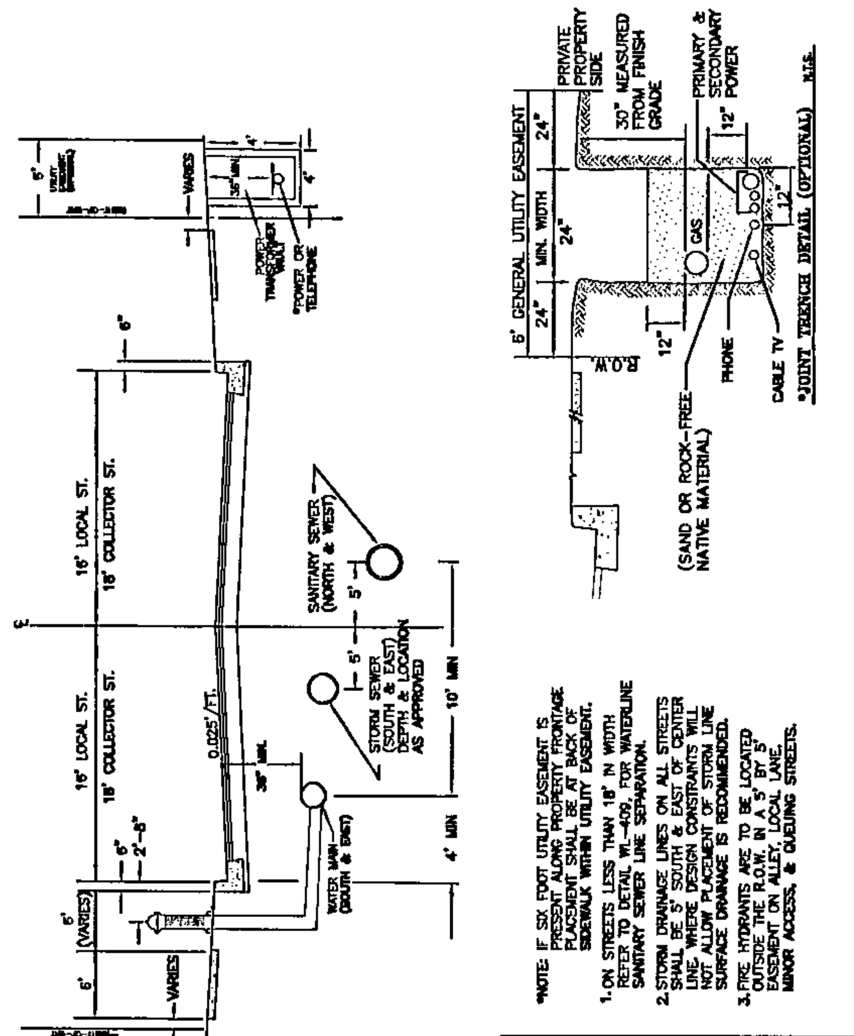

*NOTE: IF SIX FOOT UTILITY EASEMENT IS PRESENT ALONG PROPERTY FRONTAGE PLACEMENT SHALL BE AT BACK OF SIDEWALK WITHIN UTILITY EASEMENT.

1. ON STREETS LESS THAN 18' IN WIDTH REFER TO DETAIL WL-409, FOR WATERLINE SANITARY SEWER LINE SEPARATION.
2. STORM DRAINAGE LINES ON ALL STREETS SHALL BE 5' SOUTH & EAST OF CENTER LINE, WHERE DESIGN CONSTRAINTS WILL NOT ALLOW PLACEMENT OF STORM LINE SURFACE DRAINAGE IS RECOMMENDED.
3. FIRE HYDRANTS ARE TO BE LOCATED OUTSIDE THE R.O.W. IN A 5' BY 5' EASEMENT ON ALLEY, LOCAL LANE, MINOR ACCESS, & QUEUING STREETS.

Typical Utility Placement Detail

West Linn — DATE: JAN 2000 — DRAWING NO. WL-500 — FILE NO. 00-500

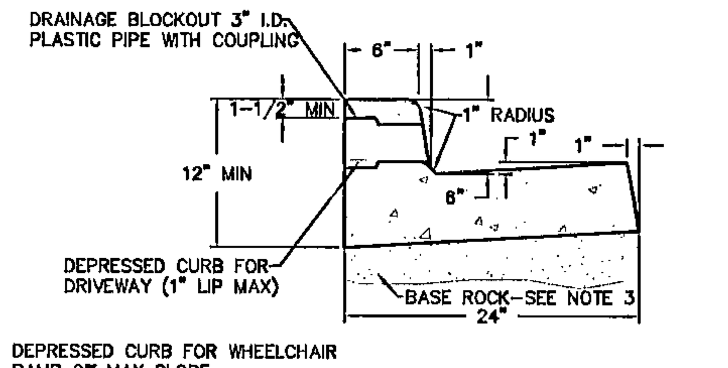

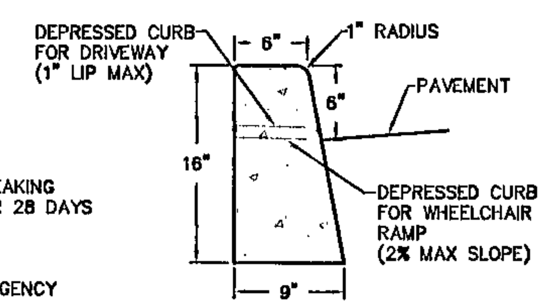

NOTES:
1. CONCRETE SHALL HAVE A BREAKING STRENGTH OF 3300 PSI AFTER 28 DAYS
2. CONTRACTION JOINTS
   A) TO BE PROVIDED
      -AT EACH POINT OF TANGENCY
      -AT EACH COLD JOINT
      -AT EACH SIDE OF INLET STRUCTURES
      -AT BOTH SIDES OF AN APPROACH
   B) SPACING TO BE NOT MORE THAN 15 FEET
   C) THE DEPTH OF THE JOINT SHALL BE AT LEAST 1/3 OF THE THICKNESS OF CONCRETE
   D) EXPANSION JOINTS SHALL NOT BE USED
3. BASE ROCK – 1-1/2"-0", 95% COMPACTION ROCK SHALL BE TO SUBGRADE OF THE STREET SECTION OR 4" IN DEPTH, WHICHEVER IS GREATER
4. DRAINAGE BLOCK – 3" DIA. PLASTIC PIPE
   A) DRAINAGE ACCESS THROUGH EXISTING CURBS SHALL BE DONE BY:
      -CORE DRILLING
      -VERTICAL SAWCUT OF CURB 18" EACH SIDE OF DRAIN AND RE-POURED TO FULL DEPTH OF CURB
5. STAMP TOP OF CURB WITH "W" AT WATER SERVICE CROSSING AND "S" AT SANITARY LATERAL CROSSING

Typical Curbs

West Linn — DATE: JAN 2000 — DRAWING NO. WL-501 — FILE NO. 00-501

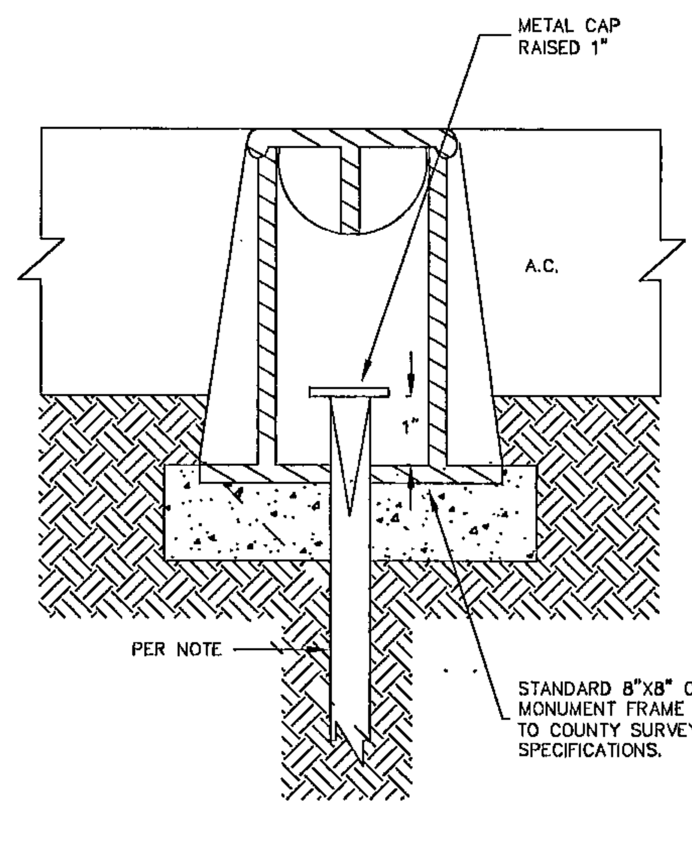

NOTES: ALL MONUMENTS SHALL USE EITHER 5/8" DIA.X 30" LONG IRON ROD OR 3/4" DIA.X 30" LONG IRON PIPE.

ALL MONUMENTS SHALL BE IN ACCORDANCE WITH ORS 209.250(4).

CONCRETE SHALL BE CLASS 3300.

FRAME AND COVER SHALL BE CAST IRON OR ALUMINUM.

COVER SHALL HAVE "MONUMENT" CAST INTO TOP.

Centerline Survey Monuments

West Linn — DATE: JAN 2000 — DRAWING NO. WL-513 — FILE NO. 00-513

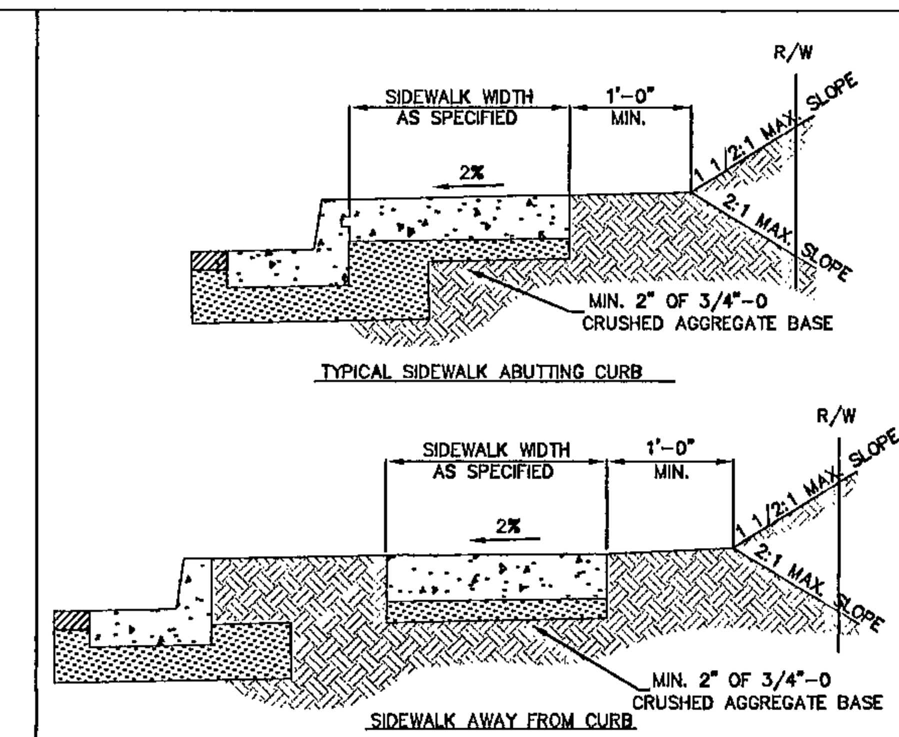

NOTES
1. CONCRETE SHALL BE 3300 PSI AT 28 DAYS, 6 SACK MIX, SLUMP RANGE OF 1 1/2" TO 3".
2. PANEL LENGTHS SHALL BE EQUAL TO THE SIDEWALK WIDTH, BUT MAY BE ADJUSTED WITH THE CITY ENGINEER'S APPROVAL.
3. CONTRACTION JOINTS (1/3RD OF THE THICKNESS OF CONCRETE) SHALL BE PLACED EVERY THIRD PANEL, WITH A MAX. SPACING OF 18 FEET. JOINTS SHALL ALSO BE PLACED AT THE SIDES OF DRIVEWAY APPROACHES, UTILITY VAULTS, AND WHEELCHAIR RAMPS.
4. A CURING COMPOUND SHALL BE USED. WHITE REFLECTIVE SHEETING SHALL BE USED IN CASE OF RAIN.
5. FOR SIDEWALKS ADJACENT TO THE CURB AND POURED AT THE SAME TIME AS THE CURB, THE JOINT BETWEEN THEM SHALL BE A TROWELED JOINT WITH A MIN. 1/2" RADIUS.
6. THE SIDEWALK SHALL HAVE A MIN. THICKNESS OF 6" IF MOUNTABLE CURB IS USED OR IF THE SIDEWALK IS INTENDED AS A PORTION OF THE DRIVEWAY. OTHERWISE, THE SIDEWALK SHALL HAVE A MIN. THICKNESS OF 4".
7. DRAIN BLOCKOUTS IN THE CURB SHALL BE EXTENDED TO THE BACK OF THE SIDEWALK WITH A 3" DIA. PLASTIC PIPE AT A 2% SLOPE. A CONTRACTION JOINT SHALL BE PLACED OVER THE PIPE.

Concrete Sidewalk Cross Section

West Linn — DATE: JAN 2000 — DRAWING NO. WL-508 — FILE NO. 00-508

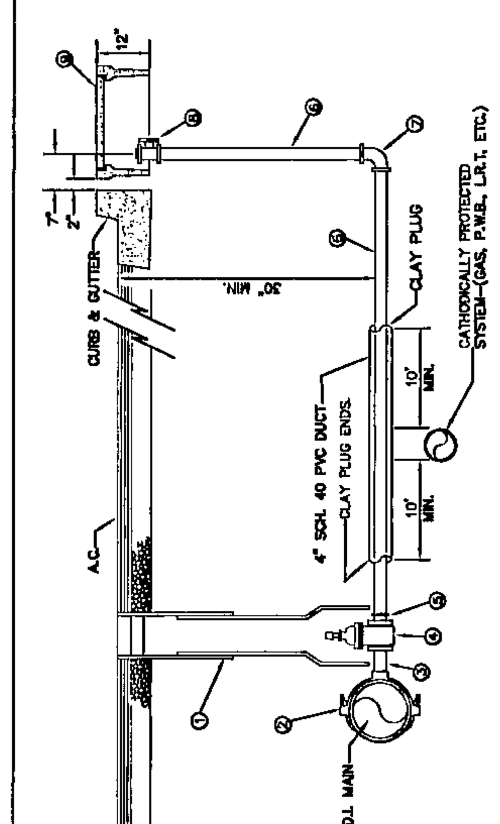

MATERIALS:
1. CAST IRON VALVE BOX AND LID (SEE STND DTL NO. 411)
2. PIPE O.D. X 2" TEE OR ROCKWELL NO. 317 SREVICE SADDLE WITH STASTRAPS.
3. 2" X 6" BRASS I.P.T. NIPPLE
4. 2" I.P.T. X I.P.T. GATE VALVE WITH RESILIENT WEDGE
5. 2" I.P.T. X 3" I.P.T. X MUELLER 110 COMP. COUPLING
6. 2" ASTM B-88 TYPE 'K' COPPER TUBING. SOFT TEMPER WITH FLARE FITTINGS WILL NOT BE APPROVED.
7. 2" 90 DEGREE ELL, MUELLER 110 CTS COMPRESSION
8. 1 1/2"-2" ANGLE METER STOP, MUELLER NO. 14276 OR 14277, FORD NO. FV23-777W
9. BROOKS METER BOX, BODY NO. 65 (2"), LID & COVER NO. 65-S (2")

NOTES:
1. SUBSTITUTES FOR ANY MATERIALS SHOWN SHALL BE APPROVED BY THE CITY ENGINEER.
2. ALL PIPE AND STRUCTURE ZONES SHALL BE BACKFILLED USING 3/4" MINUS CRUSHED AGG. AND COMPACTED TO 95% MAX. DENS. AS DETERMINED BY ASHTO T-180.
3. WHEN AN ACTIVE CATHODIC PROTECTED SYSTEM IS ENCOUNTERED, SCH. 40 PVC SHALL BE INSTALLED AND SHOWN WITH CLAY PLUG.
4. METER BOX SHALL BE CENTERED OVER THE COMPLETED METER AND FITTING ASSEMBLY.
5. CUSTOMER SHALL INSTALL AN APPROVED BACKFLOW PREVENTION DEVICE.

Standard 1 1/2" – 2" Single Service

West Linn — DATE: JAN 2000 — DRAWING NO. WL-403 — FILE NO. 00-403

BLOW-OFF SIZES REQUIRED	
MAIN SIZE	BLOW-OFF SIZE
4" TO 6"	2"
8" TO 12"	4"
14" TO 18"	6"
20" & UP	PER ENGR.

NOTES:
1. BACKFILL WITH SELECT CRUSHED AGGREGATE A MINIMUM OF 6" ON ALL SIDES.
2. ON TEMPORARY BLOW-OFFS ONLY, AN MJ CAP TAPPED 4" OR 6" MAY BE SUBSTITUTED FOR REDUCER.
3. TEMPORARY BLOW-OFF IS ONE REMOVED AT THE END OF PROJECT CONSTRUCTION. A PERMANENT BLOW-OFF REMAINS ON THE PROJECT AFTER ACCEPTANCE.
4. PLACE BLOW-OFF STANDPIPE 3 FT. INSIDE R.O.W. LINE AT END OF STREET (2FT. FROM BARRICADE).

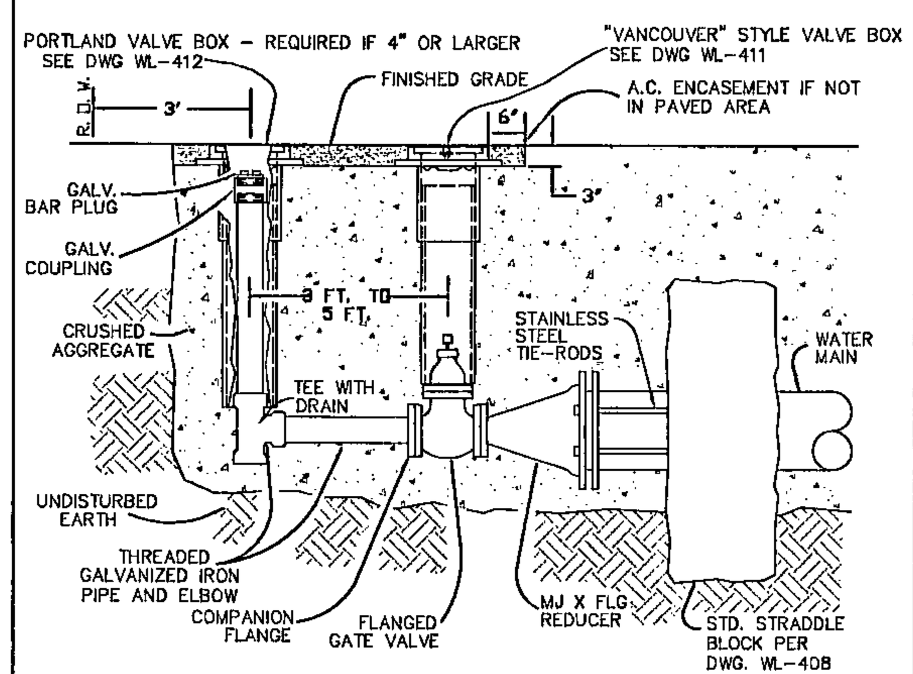

Permanent or Temporary 4" & 6" Blow-off

West Linn — DATE: JAN 2000 — DRAWING NO. WL-404B — FILE NO. 00-404B

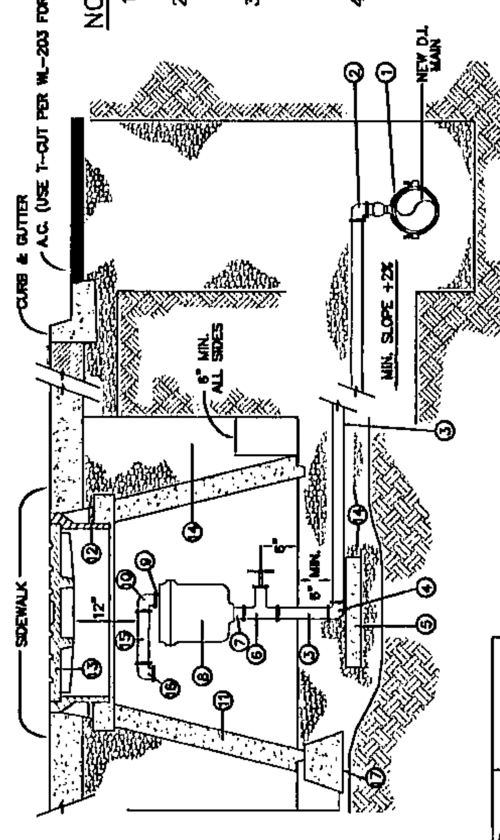

NOTES:
1. INSTALLATION LOCATED AT HIGH POINT OF MAIN
2. 48" MANHOLE BARREL SECTIONS SHALL BE USED TO INCREASE DEPTH IF NECESSARY.
3. ALL PIPE AND STRUCTURE ZONES SHALL BE COMPACTED TO 95% OF MAX. DENSITY AS DETERMINED BY AASHTO T-180 OR AS SPECIFIED IN THE CONTRACT DOCUMENTS.
4. STD. DETAIL IS NOT FOR SHALLOWER THAN TYPICAL INSTALLATIONS. CONTACT CITY WATER DEPT. FOR OPTIONS.

MATERIALS:
1. ROCKWELL NO. 317 SERVICE SADDLE WITH STAINLESS STRAPS
2. MUELLER NO. H15045 2" CORPORATION STOP WITH 1/4 BEND ADAPT (I.P.T. MUELLER 110 CTS)
3. 2" X VARIABLE LENGTH BRASS I.P.T. NIPPLE
4. 2" BRASS 90 DEGREE ELL (MUELLER 110 CTS)
5. 12" X 12" X 4" CONCRETE BLOCK
6. NIBCO NO. 113 2" BRASS GATE VALVE
7. 2" X 3" BRASS I.P.T. NIPPLE
8. 2" AIR RELEASE VALVE (VAL-MATIC #38 OR APCO #205 FOR TYPICAL INSTALLATIONS, IN SOME INSTANCES THE CITY MAY REQUIRE COMBINATION AIR RELEASE & VACUUM UNIT.) INSTALL WALL BRACKETS TO SUPPORT VALVE AS NECESSARY.
9. 1/2" X 1 1/2" OR 2" X 1 1/2" BRASS I.P.T. NIPPLE
10. 1/2" OR 2" BRASS 90 DEGREE ELL (F.M. I.P.T. X F.M. I.P.T.)
11. STD. 48" CONCRETE MANHOLE CONE
12. FRAME PER STD. DWG. WL-214.
13. TAMPERPROOF MANHOLE COVER PER STD. DWG. WL-214.
14. 3/4" MINUS CRUSHED AGG.
15. 1/2" X 6" OR 2" X 6" BRASS NIPPLE, I.P.T.
16. 1/2" OR 2" BRASS 90 DEGREE ELL WITH SCREEN ON OUTLET
17. 3 EA. 12" CONCRETE PIER BLOCKS

Standard Air Release Valve Unit

West Linn — DATE: JAN 2000 — DRAWING NO. WL-405 — FILE NO. 00-405

FITTING SIZE (Inches)	TEE, WYE, & ① HYDRANTS	STRADDLE BLOCK ②	90° BEND ③ PLUGGED CROSS TEE PLUGGED-RUNS	45° BEND ④	22 1/2° BEND ④	11 1/2° BEND ④
2	*	*	*	*	*	*
4	1.7	2.1	2.4	1.3	*	*
6	3.7	4.9	5.3	2.9	1.5	*
8	6.7	8.7	9.5	5.1	2.7	1.3
10	10.5	13.6	14.8	8	4.1	2
12	15.1	19.6	21.3	11.6	5.9	2.9
14						
16	26.8	34.8	37.9	20.5	10.4	5.2
18	33.9	44	47.9	25.9	12.8	6.7
LARGER	**	**	**	**	**	**

BEARING AREA OF THRUST BLOCKS (sq. ft.)

1. ALL VALUES ARE BASED ON THE FOLLOWING ASSUMPTIONS: AVG. PRESSURE = 100 PSI X 2 (safety factor); 1500 PSF SOIL BEARING CAPACITY; NORMAL DISTRIBUTION DESIGN VELOCITY NOT TO EXCEED 5 F/S.
2. ALL FITTINGS SHALL BE WRAPPED IN PLASTIC PRIOR TO PLACEMENT OF CONCRETE.
3. BEARING SURFACE OF THRUST BLOCKING SHALL BE AGAINST UNDISTURBED SOIL
4. ALL CONCRETE MIX SHALL HAVE A MIN. 28 DAY STRENGTH OF 3000 PSI.
5. ALL PIPE ZONES SHALL BE GRAVEL FILLED AND COMPACTED.
6. THRUST BLOCKS FOR PLUGGED CROSS AND PLUGGED TEE SHALL HAVE #4 REBAR LIFTING LOOPS INSTALLED AS SHOWN.
7. VERTICAL THRUST DETAILS–SEE DWG. WL-407.
8. STRADDLE BLOCK DETAILS–SEE DWG. WL-408.

* BLOCK TO UNDISTURBED TRENCH WALLS

** THRUST BLOCKS FOR PIPES LARGER THAN 18" WILL BE INDIVIDUALLY DESIGNED BY THE ENGINEER.

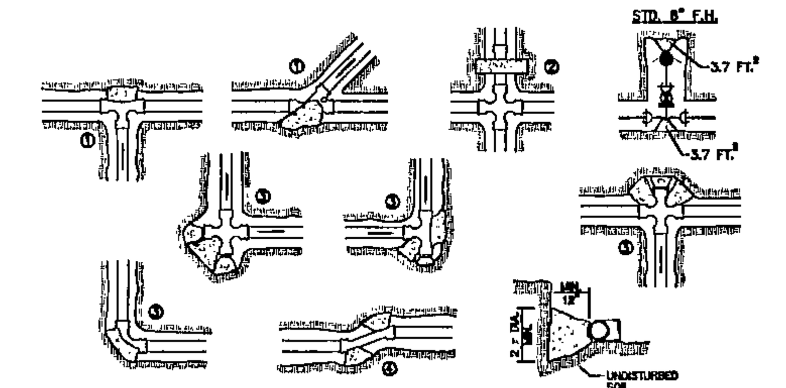

Horizontal Thrust Blocking

West Linn — DATE: JAN 2000 — DRAWING NO. WL-406 — FILE NO. 00-406

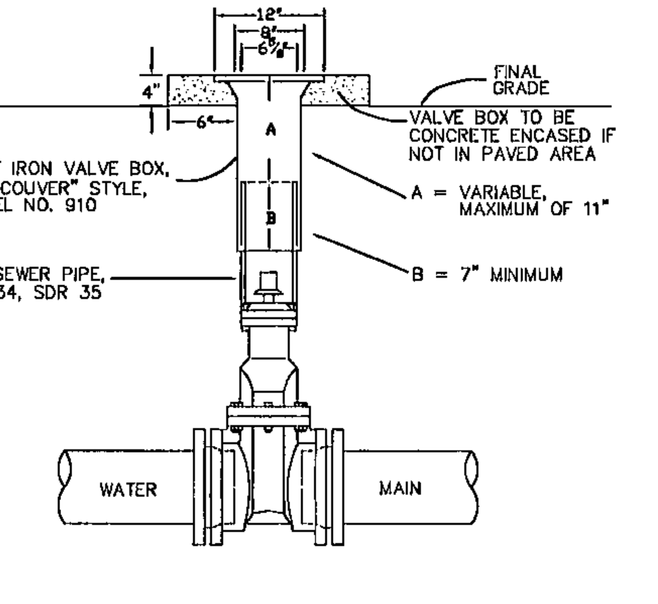

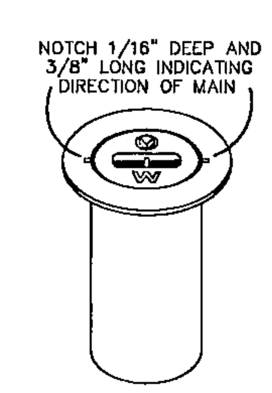

"VANCOUVER" 18" TALL VALVE BOX

NOTES:
1. VALVE BOXES SHALL BE CENTERED DIRECTLY OVER THE VALVE NUT IN A VERTICAL POSITION.
2. VALVE BOX TOP SHALL BE ADJUSTED TO MEET FINISHED GRADE.
3. PVC SHALL BE ONE CONTINUOUS PIECE– NO BELLS OR COUPLERS.
4. ON VALVES 8" AND LARGER, PVC SHALL BE NOTCHED OVER VALVE PACKING BOLTS SO PVC SITS ON BONNET.

Standard Valve Box Detail

West Linn — DATE: JAN 2000 — DRAWING NO. WL-411 — FILE NO. 00-411

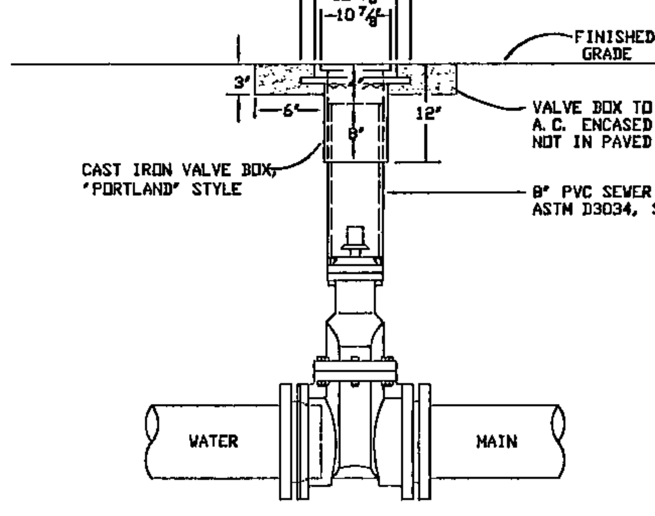

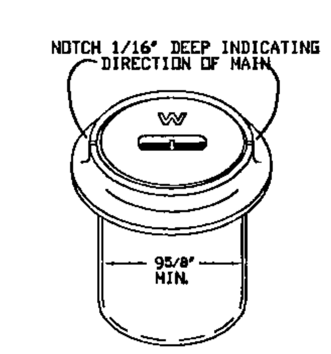

'PORTLAND' VALVE BOX

NOTES:
1. VALVE BOXES SHALL BE CENTERED DIRECTLY OVER THE VALVE NUT IN A VERTICAL POSITION.
2. VALVE BOX TOP SHALL BE ADJUSTED TO MEET FINISHED GRADE.
3. PVC SHALL BE ONE CONTINUOUS PIECE– NO BELLS OR COUPLERS.

Standard Valve Box Detail for 4" or Larger Blow-offs

West Linn — DATE: JAN 2000 — DRAWING NO. WL-412 — FILE NO. 00-412

PERMIT SUBMITTAL JULY 11, 2001

JULY 11, 2001
Date
SAS
Designed
KM, TR, SR
Drawn
SAS 7-19-01
Checked By Date

REGISTERED PROFESSIONAL ENGINEER 58,361 OREGON JULY 11, 2000 SCOTT SHUMAKER
EXPIRES: 06/30/2002

CENTEX HOMES
4000 Kruse Way Place
Building 2, Suite # 300
Lake Oswego, Oregon 97035
Phone: (503) 699-9660
Fax: (503) 699-9739

Rogerfield Phase II-52 Lots

CITY OF WEST LINN, OREGON
DETAIL SHEET

otak *Incorporated*
17355 SW Boones Ferry Road
Lake Oswego, OR 97035-5217
Phone: (503) 635-3618
FAX: (503) 635-5395

10822
Project No.
D822H50
File No.
H5.0
Sheet No.

Copyright 2001 ©

L : KRISTEN]-07/18/2001 11:58am --> H:\PROJECT\10800\10822\DWG\D822H50.DWG

XREF LIST
Ltscale: 40
Resolved
D822X005

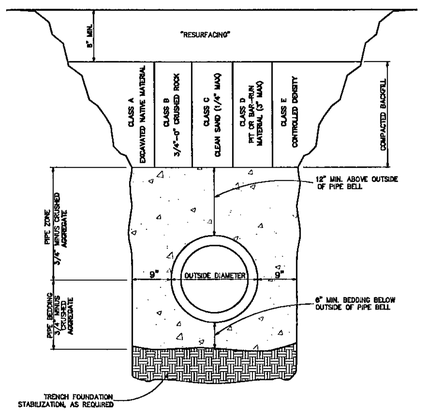

Trench Backfill, Bedding and Pipe Zone

DATE	JAN 2000
DRAWING NO.	WL-200
FILE NO.	00-200

NOTE:
MANHOLE LID TO BE 1' ABOVE FINISH GRADE IN EASEMENTS.

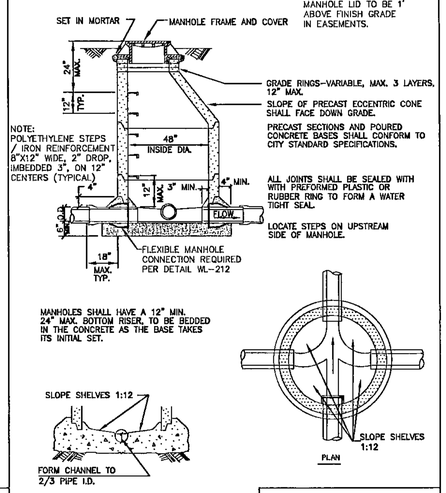

NOTE:
POLYETHYLENE STEPS / IRON REINFORCEMENT 8"X12" WIDE, 2" DROP, IMBEDDED 3", ON 12" CENTERS (TYPICAL)

MANHOLES SHALL HAVE A 12" MIN. 24" MAX. BOTTOM RISER, TO BE BEDDED IN THE CONCRETE AS THE BASE TAKES ITS INITIAL SET.

NOTE:
CHANNELS MUST BE ABLE TO PASS A 7"X30" CYLINDER INTO PIPES. SHELF SHALL NOT BE BELOW THE TOP OF THE PIPE.

Standard Manhole for Less than 36" Pipe

DATE	JAN 2000
DRAWING NO.	WL-207
FILE NO.	00-207

NOTE:
MANHOLE LID TO BE 6" ABOVE FINISH GRADE IN EASEMENTS.

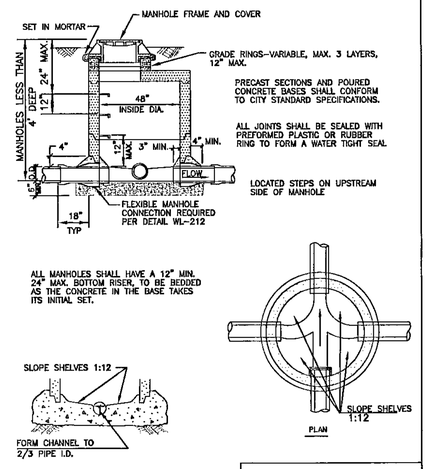

ALL MANHOLES SHALL HAVE A 12" MIN. 24" MAX. BOTTOM RISER, TO BE BEDDED AS THE CONCRETE IN THE BASE TAKES ITS INITIAL SET.

NOTE:
CHANNELS MUST BE ABLE TO PASS A 7"X30" CYLINDER INTO PIPES. SHELF SHALL NOT BE BELOW SPRING LINE OF THE PIPE.

Shallow Manhole for Less than 36" Pipe

DATE	JAN 2000
DRAWING NO.	WL-208
FILE NO.	00-208

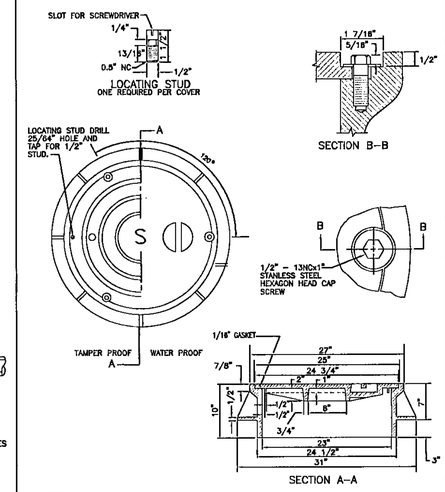

NOTES:
1. COVER AND FRAME TO BE MACHINED TO A TRUE BEARING ALL AROUND.
2. MATERIAL SHALL BE OF GRAY CAST IRON A.S.T.M. A-48 CLASS 30.
3. 2 HOLE LID FOR SANITARY SEWER
4. 16 HOLE LID FOR STORM SEWER

Waterproof and Tamperproof Manhole Frame and Cover

DATE	JAN 2000
DRAWING NO.	WL-214
FILE NO.	00-214

NOTES:
1. COVER AND FRAME TO BE MACHINED TO A TRUE BEARING ALL AROUND.
2. MATERIAL SHALL BE GRAY CAST IRON A.S.T.M. A-48 CLASS 30.
3. TWO HOLE LID FOR SANITARY SEWER.
4. 16 HOLE LID FOR STORM SEWER.

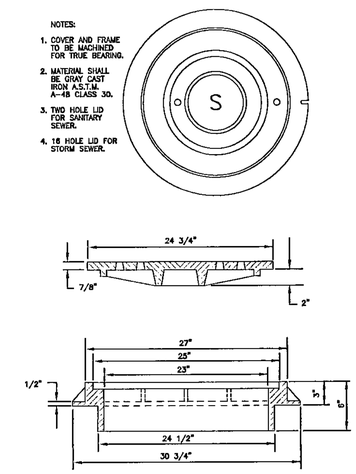

Suburban Manhole Frame and Cover 3" Depth

DATE	JAN 2000
DRAWING NO.	WL-300
FILE NO.	00-300

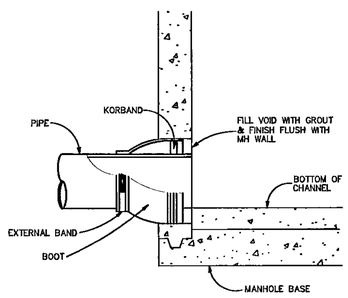

FLEXIBLE MANHOLE CONNECTION
(KOR-N-SEAL OR EQUAL)

Flexible Manhole Connection

DATE	JAN 2000
DRAWING NO.	WL-212
FILE NO.	00-212

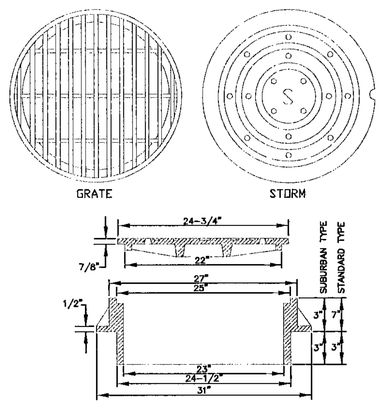

NOTES:
1. USE SUBURBAN TYPE ONLY IN NON-TRAFFIC AREAS, AND ONLY WITH APPROVAL BY THE CITY.
2. COVER AND FRAME SHALL BE GRAY CAST IRON ASTM A-48 CLASS 30.
3. COVER AND FRAME TO BE MACHINED TO A TRUE BEARING ALL AROUND.
4. NOTCH LID FOR LIFTING HOOK.
5. OPEN GRATES REQUIRE APPROVAL BY CITY, AND MUST BE BICYCLE SAFE IF USED IN TRAFFIC AREAS.

SUBURBAN AND STANDARD MANHOLE FRAME AND COVER

Manhole Covers

DATE	JAN 2000
DRAWING NO.	WL-605
FILE NO.	00-605

MANHOLE RIMS AND COVERS AS MANUFACTURED BY HERN IRON WORKS, COEUR D' ALENE, IDAHO. COVER PATTERN NO. 2312, RIM PATTERN NO. 2311 OR APPROVED EQUAL.

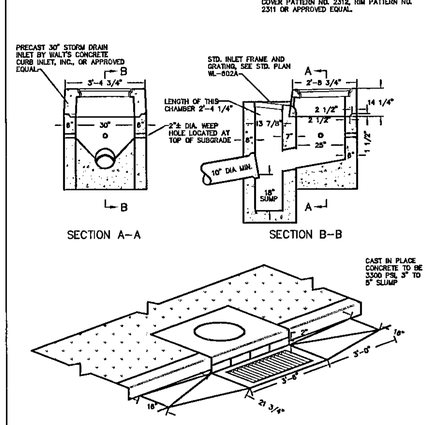

Combination Curb Inlet

DATE	JAN 2000
DRAWING NO.	WL-601
FILE NO.	00-601

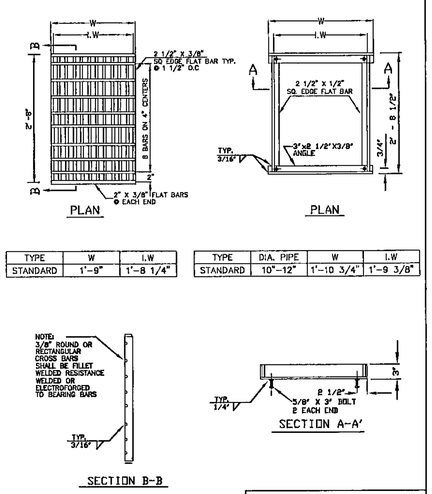

TYPE	W	I.W
STANDARD	1'-9"	1'-8 1/4"

TYPE	DIA. PIPE	W	I.W
STANDARD	10"-12"	1'-10 3/4"	1'-9 3/8"

NOTE:
USE VERTICAL BEADS IN CORNERS. FILLET WELD JOINT ON BOTTOM OF FRAME. GRATE MUST REST FLAT ON FRAME SURFACE.

Frame & Grate for Gutter & Curb Inlets

DATE	JAN 2000
DRAWING NO.	WL-602A
FILE NO.	00-602A

JULY 11, 2001
Date
SAS
Designed
KM, TR, SR
Drawn
SAS 7-19-01
Checked By Date

REGISTERED PROFESSIONAL ENGINEER 56,367 OREGON JULY 14, 2000 SCOTT SHUMAKER
EXPIRES: 06/30/2002

CENTEX HOMES
4000 Kruse Way Place
Building 2, Suite # 300
Lake Oswego, Oregon 97035
Phone: (503) 699-9660
Fax: (503) 699-9739

Rogerfield Phase II-52 Lots

CITY OF WEST LINN, OREGON
DETAIL SHEET

PERMIT SUBMITTAL JULY 14, 2001

otak Incorporated
17355 SW Boones Ferry Road
Lake Oswego, OR 97035-5217
Phone: (503) 635-3618
FAX: (503) 635-5395

10822
Project No.
D822H51
File No.
H5.1
Sheet No.

Copyright 2001 ©

L: \PRSTEN\ 07/18/2001 11:59am --> M:\PROJECT\10820\10822\DWG\D822H51.DWG

XREF LIST
Ltscale: 40
Resolved
D822X005

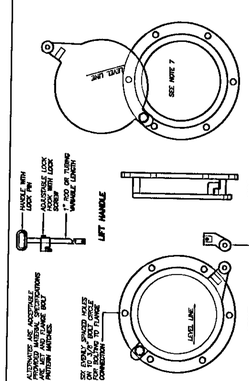

ALTERNATE AND ACCEPTABLE CLEANOUT DESIGNS MAY BE PRESSURE AND FLANGE BELT PRESSURE MODEL

BY EWING GRIFFIN VALVE CO. INC. 1-800-323-7236 OR TO FLANGE CONNECTION

CLEANOUT/SHEAR GATE
NOTES:

1. CLEANOUT/SHEAR GATE SHALL BE ALUMINUM ALLOY PER ASTM B-26-20-356 OR CAST IRON ASTM A48 CLASS 30B AS REQUIRED.
2. LIFT HANDLE STOWED IN TUBING WITH ADJUSTABLE ROCK AS REQUIRED.
3. NEOPRENE RUBBER GASKET IN TUBING WITH STAINLESS STEEL FASTENERS.
4. MATING SURFACES OF LID AND BODY TO BE MACHINED FOR PROPER FIT.
5. FLANGE MOUNTING BOLTS SHALL BE 3/4" DIAMETER STAINLESS STEEL.
6. ALTERNATE CLEANOUT/SHEAR GATES DO NOT DESIGN SHOWN ARE ACCEPTABLE PROVIDED THEY MEET THE MATERIAL SPECIFICATIONS AND THE ACCESS OPENING IS NOT LESS THAN THE ORIGINAL DESIGN WHEN MEASURED BETWEEN THE FLANGE CONNECTION.
7. GATE SHALL NOT OPEN BEYOND THE CLEAR OPENING BY MORE THAN 6 INCHES, STOP TAB ON SIDE OPENS LEVEL.

Cleanout / Shear Gate

West Linn | DATED JAN 2000 | DRAWING NO. WL-611 | FILE NO. 00-611

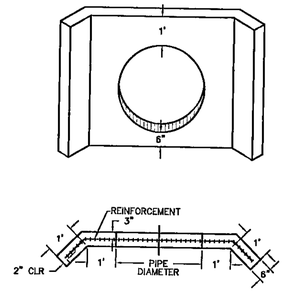

NOTES:

1. USE CONCRETE HAVING A 28 DAY DESIGN STRENGTH OF 3300 PSI.
2. OUTLET WING WALL SHALL BE USED FOR ALL OUTFALL PIPES FROM 10" TO 36".
3. THIS DETAIL REPRESENTS THE MINIMUM REQUIREMENT. THE NEED FOR ADDITIONAL STEEL, A FOOTING AND DRAINAGE BEHIND THE WALL SHALL BE INVESTIGATED BY THE DESIGN ENGINEER.
4. FOR PIPES LARGER THAN 33" OR MULTIPLE PIPE OUTLETS, USE DETAIL WL-612.
5. CONCRETE REINFORCEMENT SHALL CONSIST OF:
   A) ADDING A POLY-FIBER MESH TO THE CONCRETE MIX OR
   B) USE (2) #4 BARS ABOVE AND BELOW PIPE AND #4 BARS AT 6" O.C. VERTICALLY.

Outlet Headwall (For Outlet Pipes of 10" to 33")

West Linn | DATED JAN 2000 | DRAWING NO. WL-613 | FILE NO. 00-613

D = PIPE DIAMETER
W = BOTTOM WIDTH OF CHANNEL
P = WETTED PERIMETER OF CHANNEL

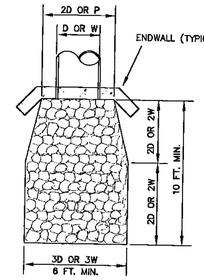

DESIGN VELOCITY FT./SEC	ROCK CLASSIFICATION BY WEIGHT
8 – 10	200 LBS.
10 – 12	1/4 TON
12 – 14	1/2 TON
14 – 16	1 TON
16 – 18	2 TON

SELECTION OF RIP RAP (SEE NOTE 1)

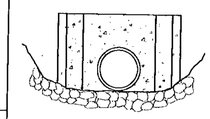

NOTES:

1. DIMENSIONS FOR RIP RAP APPLY TO FLOWS < 8 CFS RIP RAP FOR FLOWS > 8 CFS MUST BE DESIGNED BY AN ENGINEER FLOWS > 20 FPS SHALL USE ENERGY DISSIPATOR
2. TYPE OF RIP RAP
   A. REGULAR QUARRY STONE CLASS 50–200
   B. COBBLESTONE
   C. CONCRETE (ONLY ALLOWED UPON APPROVAL OF THE DISTRICT)
3. PLACEMENT
   A. MINIMUM DEPTH = 1 1/2 TIMES AVERAGE STONE SIZE
   B. ROCKS SHALL BE PLACED TO PROVIDE A MINIMUM OF VOIDS.
   C. SURFACE ROCKS OR CONCRETE SHALL PROTRUDE AT LEAST 1/2 THEIR VERTICAL DIMENSION.
   D. RIP RAP IS TO BE PLACED OVER A NATURAL BEDDING, OR IT MAY BE GROUTED OR PLACED OVER A GRAVEL BEDDING AS REQUIRED BY THE CITY.

Storm Sewer Outfall

West Linn | DATED JAN 2000 | DRAWING NO. WL-614 | FILE NO. 00-614

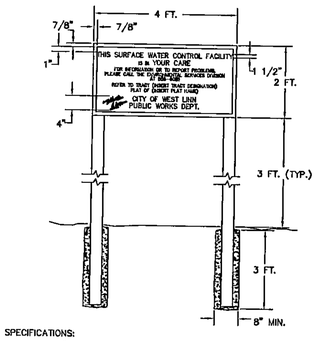

SPECIFICATIONS:

SIZE: 48" BY 24"
MATERIAL: GRADE "B" OR BETTER EXTERIOR PLYWOOD
PAINT: FACE – 3 COATS OUTDOOR ENAMEL (SPRAYED).
BACK – 1 COAT OUTDOOR ENAMEL (SPRAYED).
LETTERING: SILK SCREEN ENAMEL WHERE POSSIBLE, OR HAND PAINTED ENAMELS.
COLORS: BLACK AND WHITE. WHITE BACKGROUND, LETTERING AND BORDER IN BLACK
TYPE FACE: HELVETICA. 1 1/2" TALL WITH 7/8" SPACING BETWEEN LETTERS AND OUTER BORDER. OUTER BORDER 1/2" WIDTH
INSTALLATION: SECURED TO CHAIN LINK FENCE IF AVAILABLE, OTHERWISE INSTALL ON TWO 8 FT. LONG 4" X 4" POSTS, PRESSURE TREATED, INSTALLED IN 3 FT. DEEP CONCRETE FILLED POST HOLES (8" MIN. DIA.)

Surface Water Facility Sign

West Linn | DATED JAN 2000 | DRAWING NO. WL-615 | FILE NO. 00-615

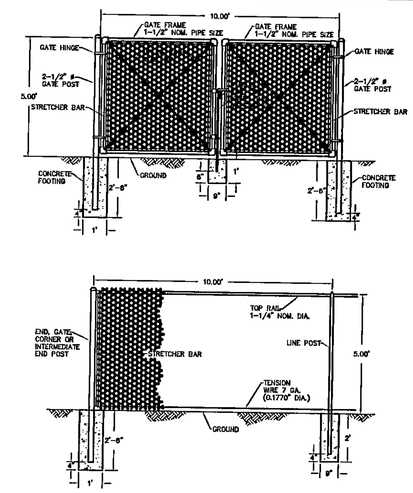

NOTES:

1. BLACK POWDER COATING ON ALL HARDWARE AND ACCESSORIES IS REQUIRED.
2. ALL MATERIAL AND WORKMANSHIP SHALL BE IN ACCORDANCE WITH THE CURRENT STATE OF OREGON STANDARD SPECIFICATIONS FOR HIGHWAY CONSTRUCTION.

Surface Water Facility Fence

West Linn | DATED JAN 2000 | DRAWING NO. WL-616 | FILE NO. 00-616

JULY 11, 2001
Date
SAS
Designed
KM, TR, SR
Drawn
SAS 7-19-01
Checked By Date

REGISTERED PROFESSIONAL ENGINEER 58,361 OREGON JULY 11, 2001 SCOTT A. SHUMAKER

EXPIRES: 06/30/2002

CENTEX HOMES
4000 Kruse Way Place
Building 2, Suite #300
Lake Oswego, Oregon 97035
Phone: (503) 699-9660
Fax: (503) 699-9739

PERMIT SUBMITTAL JULY 19, 2001

Rogerfield Phase II-52 Lots

CITY OF WEST LINN, OREGON
DETAIL SHEET

otak
Incorporated
17355 SW Boones Ferry Road
Lake Oswego, OR 97035-5217
Phone: (503) 635-3618
FAX: (503) 635-5395

10822
Project No.
D822H52
File No.
H5.2
Sheet No.

Copyright 2001 ©

L:\KRISTEN\-07/18/2001 11:50am --> H:\PROJECT\10800\10822\DWG\D822H52.DWG