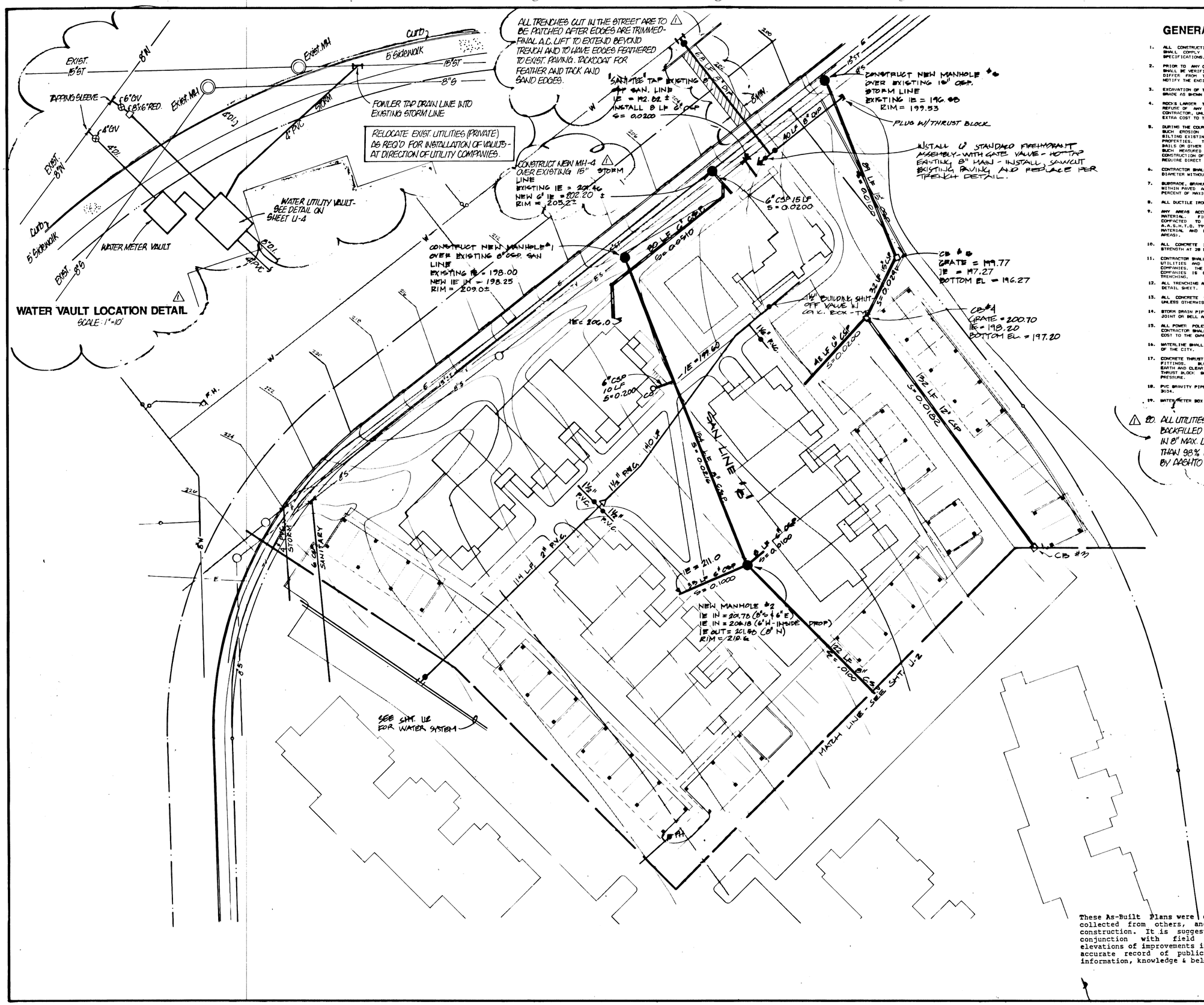

GENERAL NOTES

1. ALL CONSTRUCTION AND MATERIAL INCLUDED IN THIS CONTRACT SHALL COMPLY WITH THE CURRENT A.P.W.A. STANDARDS AND SPECIFICATIONS.
2. PRIOR TO ANY CONSTRUCTION, LOCATIONS OF EXISTING UTILITIES SHALL BE VERIFIED BY THE CONTRACTOR, WHEN ACTUAL CONDITIONS DIFFER FROM THOSE NOW ON THE PLANS, THE CONTRACTOR SHALL NOTIFY THE ENGINEER PRIOR TO PROCEEDING WITH CONSTRUCTION.
3. EXCAVATION OF THE ROADWAY AREA SHALL BE TO THE LINE AND GRADE AS SHOWN ON THE PLANS AND WILL BE UNCLASSIFIED.
4. ROCKS LARGER THAN 12 INCHES IN DIAMETER, ROOTS, BRUSH AND REFUSE OF ANY KIND SHALL BE EXPORTED AND DISPOSED BY THE CONTRACTOR, UNLESS OTHERWISE DIRECTED BY THE ENGINEER, AT NO EXTRA COST TO THE OWNER.
5. DURING THE COURSE OF CONSTRUCTION, THE CONTRACTOR SHALL USE SUCH EROSION CONTROL MEASURES AS NECESSARY TO PREVENT SILTING EXISTING PUBLIC STREETS OR STORM DRAINS AND ADJACENT PROPERTIES. THESE MEASURES MAY INCLUDE PLACEMENT OF STRAW BALES OR OTHER MEANS APPROVED BY THE ENGINEER. THE COST OF SUCH MEASURES SHALL BE CONSIDERED INCIDENTAL TO THE CONSTRUCTION OF STREETS AND PIPING SYSTEMS AND SHALL NOT REQUIRE DIRECT PAYMENT.
6. CONTRACTOR SHALL NOT CUT ANY TREES LARGER THAN 6 INCHES IN DIAMETER WITHOUT APPROVAL OF ENGINEER.
7. SUBGRADE, BEHIND/AR TRENCH BACKFILL BASE ROCK AND TOP COURSE WITHIN PAVED AREA SHALL BE COMPACTED TO NOT LESS THAN 98 PERCENT OF MAXIMUM DENSITY AS DETERMINED BY A.A.S.H.O. T-99.
8. ALL DUCTILE IRON PIPE IS TO BE TYTON JOINT CLASS 52.
9. ANY AREAS ACCEPTING FILL SHALL BE STRIPPED OF ORGANIC MATERIAL. FILL SHALL BE PLACED IN 8-INCH LAYERS AND COMPACTED TO 98 PERCENT RELATIVE MAXIMUM DENSITY A.A.S.H.T.O. T99. NATIVE FILL SHALL BE FREE FROM ORGANIC MATERIAL AND ROCKS OVER 12 INCHES IN DIAMETER (STREET AREAS).
10. ALL CONCRETE IS TO HAVE MINIMUM 3000 P.S.I. COMPRESSION STRENGTH AT 28 DAYS.
11. CONTRACTOR SHALL EXCAVATE AND BACKFILL TRENCHES FOR PRIVATE UTILITIES AND TO COORDINATE THE WORK WITH THE UTILITY COMPANIES. THE COSTS OF COORDINATION WITH CABLE UTILITY COMPANIES IS CONSIDERED TO BE INCIDENTAL TO THE COST OF TRENCHING.
12. ALL TRENCHING AND PIPE PLACEMENT SHALL BE PER DETAIL ON THE DETAIL SHEET.
13. ALL CONCRETE SEWER PIPE SHALL BE A.S.T.M. C-14 CLASS 3 UNLESS OTHERWISE NOTED.
14. STORM DRAIN PIPE MAY BE EITHER TONGUE AND GROOVE MORTARED JOINT OR BELL AND SPIGOT WITH GASKET.
15. ALL POWER POLES SHALL BE MOVED BY UTILITY COMPANIES. THE CONTRACTOR SHALL COORDINATE THIS EFFORT AT NO ADDITIONAL COST TO THE OWNER.
16. WATERLINE SHALL BE CONNECTED AND TESTED TO THE SATISFACTION OF THE CITY.
17. CONCRETE THRUST BLOCKING SHALL BE PROVIDED AT ALL WATERLINE FITTINGS. BLOCKING SHALL BE POURED AGAINST UNDISTURBED EARTH AND CLEAR OF JOINT ACCESSORIES. BEARING AREA OF THRUST BLOCK SHALL BE COMPUTED ON THE BASIS OF SOIL BEARING PRESSURE.
18. PVC GRAVITY PIPE SHALL MEET THE REQUIREMENTS OF A.S.T.M. D-3034.
19. WATER METER BOX NOT TO BE LOCATED IN SIDEWALKS.
20. ALL UTILITIES PLACED IN RIGHT-OF-WAY WILL BE BACKFILLED W/ 3/4"-0" CRUSHED ROCK PLACED IN 8" MAX. LIFTS & COMPACTED TO NOT LESS THAN 98% OF MAX. DENSITY AS DETERMINED BY AASHTO T-99.

These As-Built Plans were compiled from survey data, data collected from others, and periodic observation during construction. It is suggested that these plans be used in conjunction with field verification of location and elevations of improvements in question. These plans are an accurate record of public improvements to the best of my information, knowledge & belief.

David Beach
Signature PE # 13247 OR

Dec. 20, 1988
Date

Designed		Date
Drawn		Date
Checked		Date

Revisions
REV. 11/6/87 GWS
AS BUILTS 12-20-88

REGISTERED PROFESSIONAL ENGINEER 13247 OREGON JULY 17, 1986 DAVID G. BEACH

ROBYNWOOD VIEW APARTMENTS

OWNER
PACIFIC DEVELOPMENTAL SERVICES INC.
AN OREGON CORPORATION

GENERAL CONTRACTOR
HARTHUN INCORPORATED

otak incorporated

U-1
Sheet No.

1432
Project No.

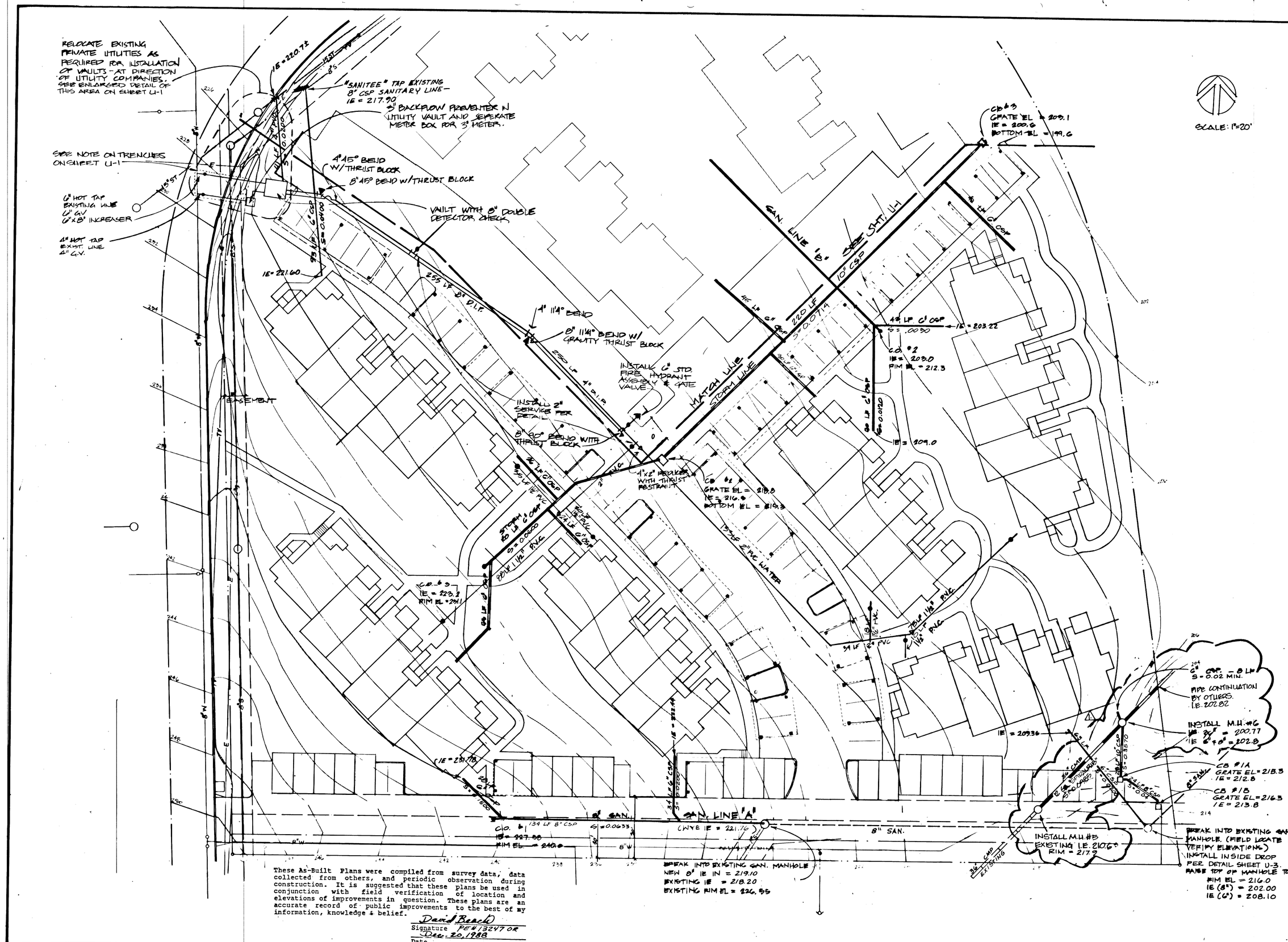

These As-Built Plans were compiled from survey data, data collected from others, and periodic observation during construction. It is suggested that these plans be used in conjunction with field verification of location and elevations of improvements in question. These plans are an accurate record of public improvements to the best of my information, knowledge & belief.

David Beach
Signature PE#13247 OR
Dec. 20, 1988
Date

DGB Designed	10-87 Date
RW Drawn	Date
DGB Checked	10-87 Date

Revisions
1 CITY REVISIONS
2 AS BUILTS 12-20-8

REGISTERED PROFESSIONAL ENGINEER 13,247 OREGON JULY 17, 1986 DAVID G. BEACH

ROBYNWOOD VIEW APARTMENTS

OWNER
PACIFIC DEVELOPMENTAL SERVICES INC.
AN OREGON CORPORATION

GENERAL CONTRACTOR
HARTHUN INCORPORATED

otak incorporated

U-2
Sheet No.

1452
Project No.

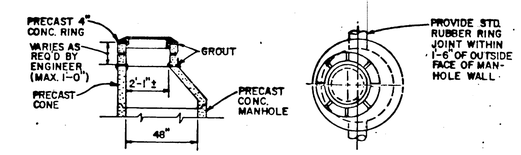

PRECAST RING EXTENSION FOR TYPICAL MANHOLE

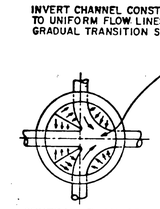

GENERAL PLAN OF CHANNEL INTERSECTION

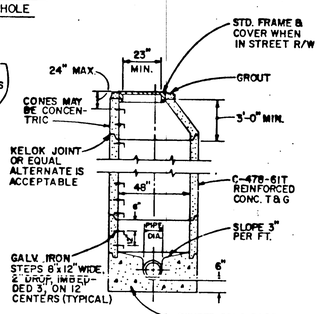

TYPICAL MANHOLE
6" TO 21" PIPE

NOTES:
1. ALL PRECAST SECTIONS SHALL CONFORM TO THE REQUIREMENTS OF A.S.T.M.-C-478. ALL POURED IN PLACE CONCRETE SHALL HAVE A 28 DAY STRENGTH OF 3,000 P.S.I. AND 2" TO 4" SLUMP.
2. MATERIAL: 3/4" DIA. STRUCTURAL STEEL CONFORMING TO A.S.T.M. A-36 AND GALVANIZED IN CONFORMANCE TO A.S.T.M. A-123, FOR STEPS.

MANHOLE DETAIL

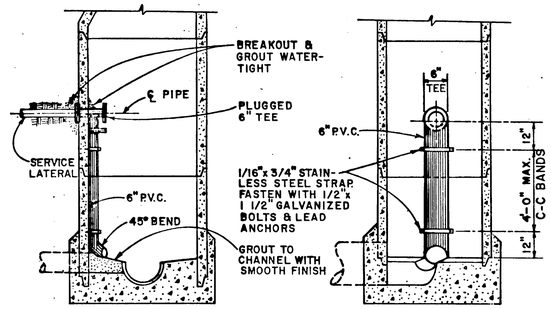

℄ SIDE SECTION

℄ FRONT SECTION

NOTE:

1. FOR SERVICE LATERAL CONNECTION ONLY WHEN MANHOLE IS OVER 8'-0" DEEP OR AS APPROVED BY THE CITY ENGINEER.

INSIDE DROP MANHOLE

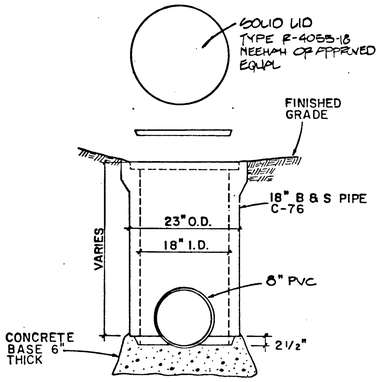

FIELD INLET DETAIL

TYPE "A"

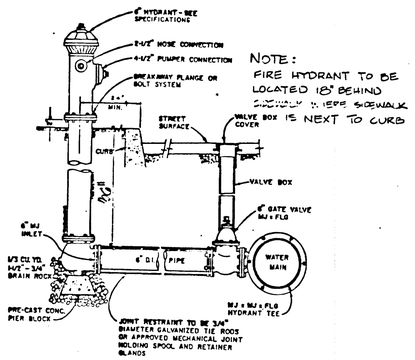

NOTE:
FIRE HYDRANT TO BE LOCATED 18" BEHIND SIDEWALK IF THERE IS SIDEWALK
VALVE BOX IS NEXT TO CURB

FIRE HYDRANT ASSEMBLY

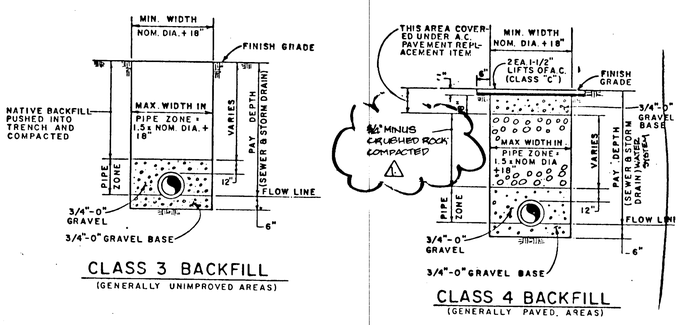

CLASS 3 BACKFILL
(GENERALLY UNIMPROVED AREAS)

CLASS 4 BACKFILL
(GENERALLY PAVED AREAS)

TRENCHING DETAIL

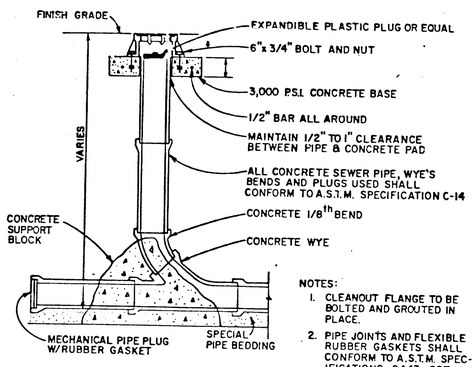

NOTES:
1. CLEANOUT FLANGE TO BE BOLTED AND GROUTED IN PLACE.
2. PIPE JOINTS AND FLEXIBLE RUBBER GASKETS SHALL CONFORM TO A.S.T.M. SPECIFICATIONS C443-60T.
3. CAST IRON FRAME AND COVER SHALL BE VALLEY IRON & STEEL CO. NO.'S 202 FOR 5" & 203 FOR 6" OR EQUAL.

SECTION

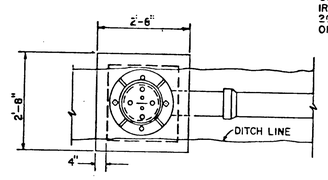

PLAN

SANITARY SEWER CLEANOUT

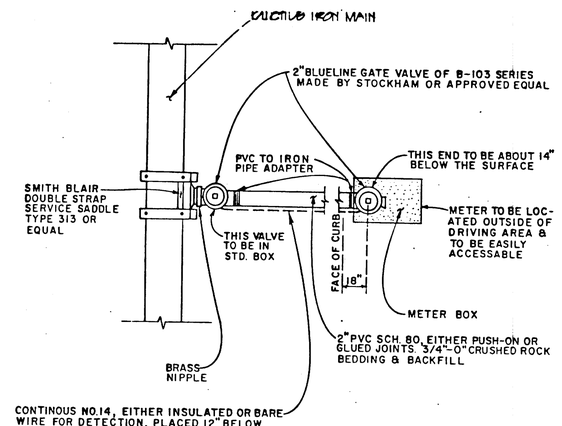

NOTES:
1. ON NEW MAINLINE INSTALLATION CONTRACTOR SHALL INSTALL ALL SERVICE LINE SADDLES PRIOR TO TESTING MAINLINE.

TYPICAL 2" PVC WATER SERVICE

These As-Built Plans were compiled from survey data, data collected from others, and periodic observation during construction. It is suggested that these plans be used in conjunction with field verification of location and elevations of improvements in question. These plans are an accurate record of public improvements to the best of my information, knowledge & belief.

David Beach
Signature PE 13247 OR
Dec. 20, 1988
Date

NOTES:
1. CONCRETE THRUST BLOCKING TO BE POURED AGAINST UNDISTURBED EARTH.
2. KEEP CONCRETE CLEAR OF JOINT AND ACCESSORIES.
3. IF NOT SHOWN ON PLANS, REQUIRED BEARING AREAS AT FITTING SHALL BE AS INDICATED BELOW, ADJUSTED IF NECESSARY, TO CONFORM TO THE TEST PROCEDURE (S) AND ALLOWABLE SOIL BEARING STRESS(ES) STATED THE SPECIAL SPECIFICATIONS.
4. BEARING AREAS AND SPECIAL BLOCKING DETAILS SHOWN ON PLANS TAKE PRECEDENCE OVER BEARING AREAS AND BLOCKING DETAILS SHOWN ON THIS STANDARD DETAIL.
5. BUILDING PAPER OR VISQUINE SHALL BE PLACED BETWEEN CONCRETE AND FITTINGS.
6. ALL POURED IN PLACE CONCRETE SHALL HAVE A (28) DAY STRENGTH OF 3,000 P.S.I. AND 2" TO 4" SLUMP.
7. BELOW BEARING AREAS BASED ON TEST PRESSURE OF 150 P.S.I. AND AN ALLOWABLE SOIL BEARING STRESS OF 2,000 POUNDS PER SQUARE FOOT. TO COMPUTE BEARING AREAS FOR DIFFERENT TEST PRESSURES AND SOIL BEARING STRESSES, USE THE FOLLOWING EQUATION: BEARING AREA = (TEST PRESSURE/150) X (2,000/SOIL BEARING STRESS) X (TABLE VALUE).

FITTING SIZE (IN.)	TEE, WYE, PLUG OR CAP	90° BEND PLUGGED CROSS	TEE PLUGGED ON RUN A_1	TEE PLUGGED ON RUN A_2	45° BEND	22 1/2° BEND	11 1/4° BEND
4	1.0	1.4	1.9	1.4	1.0	—	—
6	2.0	3.0	4.3	3.0	1.6	1.0	—
8	3.8	5.3	7.6	5.4	2.9	1.5	1.0
10	5.9	8.4	11.8	8.4	4.6	2.4	1.2
12	8.5	12.0	17.0	12.0	6.6	3.4	1.7
14	11.5	16.3	23.0	16.3	8.9	4.6	2.3
16	15.0	21.3	30.0	21.3	11.6	6.0	3.0
18	19.0	27.0	38.0	27.0	14.6	7.6	3.8
20	23.5	33.3	47.0	33.3	18.1	9.4	4.7
24	34.0	48.0	68.0	48.0	26.2	13.6	6.8

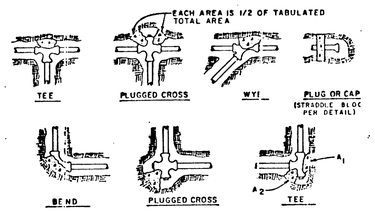

WATER LINE DETAILS & NOTES

NOTE: METER LOCATIONS ARE TO BE BEHIND SIDEWALK WHERE SIDEWALK NEXT TO CURB

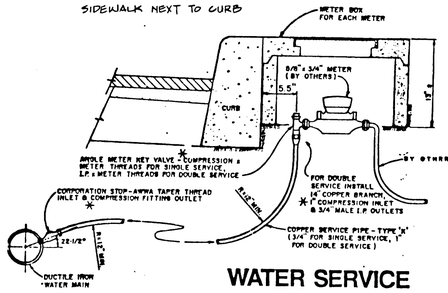

NOTE:
COMPRESSION FITTINGS TO BE MADE BY FORD CO.

WATER METER BOX NOT TO BE LOCATED IN SIDEWALK

WATER SERVICE

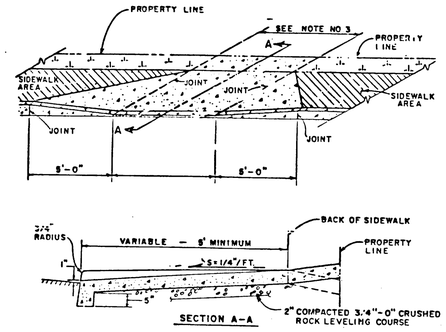

SECTION A-A

NOTES:
1. DRIVEWAY TO BE CONSTRUCTED OF 3,000 P.S.I., 2" TO 4" SLUMP CONCRETE 6" THICK WITH BROOM FINISH.
2. TO BE USED WITH CURB LINE SIDEWALKS AND WHERE DISTANCE FROM BACK OF CURB TO SIDEWALK IS 4' OR LESS

TYPICAL DRIVEWAY APPROACH

Designed
Drawn
Checked

Revisions
1 CITY REVISIONS
2 ASBUILTS 12-20-88

REGISTERED PROFESSIONAL ENGINEER 13247 DAVID G. BEACH

ROBYNWOOD VIEW APARTMENTS

OWNER
PACIFIC DEVELOPMENTAL SERVICES INC.
AN OREGON CORPORATION

GENERAL CONTRACTOR
HARTHUN INCORPORATED

otak incorporated

U-3
Sheet No.

1492
Project No.