# RIVERVIEW PARK

# WEST LINN, OREGON

## CRAIG LATOURETTE

## 6443 S.W. BEAVERTON - HILLSDALE HIGHWAY, #100

## PORTLAND, OREGON 97221

### GENERAL NOTES

1. ALL CONSTRUCTION SHALL BE IN ACCORDANCE WITH THE CITY OF WEST LINN ENGINEERING DESIGN MANUAL.
2. PRIOR TO ANY CONSTRUCTION, LOCATIONS OF EXISTING UTILITIES SHALL BE VERIFIED BY THE CONTRACTOR. WHEN ACTUAL CONDITIONS DIFFER FROM THOSE SHOWN ON THE PLANS, THE CONTRACTOR SHALL NOTIFY THE ENGINEER PRIOR TO PROCEEDING WITH CONSTRUCTION.
3. ORGANIC AND NON-DESIRABLE MATERIAL SHALL BE REMOVED FROM THE CONSTRUCTION AREA AS DIRECTED BY THE ENGINEER.
4. ALL FILL AREAS SHALL BE STRIPPED OF ORGANIC MATERIAL. FILL WILL BE PLACED IN 9 INCH LAYERS AND COMPACTED TO 95 PERCENT RELATIVE MAXIMUM DENSITY ACCORDING TO AASHTO T-99 STANDARDS. BASE ROCK IN THE STREET WILL BE COMPACTED TO THE SAME STANDARD. LANDSCAPED AREAS WILL BE COMPACTED TO 90 PERCENT. THE CONTRACTOR WILL PROVIDE DENSITY TESTING, ONE FOR EVERY 10,000 SQUARE FEET OF AREA AND 2 FEET OF FILL PLACED. COMPACTION REPORTS FROM A REPUTABLE TESTING LAB WILL BE SUPPLIED TO THE ENGINEER.
5. STANDARD WHEELCHAIR-BICYCLE RAMPCURB-DROPS SHALL BE LOCATED AS SHOWN ON CONSTRUCTION PLANS.
6. MANHOLE CONSTRUCTION SHALL BE AS SHOWN ON THE STANDARD CITY OF WEST LINN PLANS. PRECAST BASES WILL NOT BE PERMITTED FOR MANHOLES.
7. PRIOR TO ACCEPTANCE, ALL PUBLIC SANITARY AND STORM SEWER SHALL BE AIR TESTED IN ACCORDANCE WITH THE CITY OF WEST LINN'S REQUIREMENTS FOR SUCH TESTS. PVC PIPE SHALL ALSO BE TESTED FOR DEFLECTION.
8. MINIMUM COVER OVER WATERLINES IS TO BE 3 FEET, MINIMUM VERTICAL SEPARATION BETWEEN WATERLINE AND SANITARY SEWER AT A CROSSING IS 18 INCHES. WATERLINES AT SANITARY SEWER CROSSINGS WITH LESS THAN THE MINIMUM VERTICAL SEPARATION SHALL BE CONSTRUCTED OF DUCTILE IRON PIPE WITH WATERTIGHT JOINTS. IN SUCH CASES THE 18' LENGTH OF DUCTILE IRON SANITARY SEWER SHALL BE CENTERED AT THE CROSSING.
9. BEDDING AND PIPE ZONE BACKFILL REQUIREMENTS WILL BE IN ACCORDANCE WITH STANDARD CITY SPECIFICATIONS AND DETAILS.
10. WATERLINES SHALL BE PRESSURE TESTED FOLLOWING COMPLETION. TEST PRESSURE SHALL BE 150 PSI AT LOWEST POINT IN TEST SECTION AND SHALL BE HELD ON THE LINE FOR A PERIOD OF THIRTY MINUTES. LEAKAGE MUST BE WITHIN ALLOWABLE LEAKAGE LIMITS. SERVICE LINES WILL ALSO BE TESTED TO THE METER LOCATION IF INSTALLED BY CONTRACTOR.
11. PRIOR TO BEING PLACED IN SERVICE, THE WATERLINE SHALL BE FLUSHED, STERILIZED AND FLUSHED ALL IN ACCORDANCE WITH STANDARD METHODS OF THE HEALTH DIVISION, DEPARTMENT OF HUMAN RESOURCES, STATE OF OREGON.
12. PRIOR TO ALLOWING HUMAN CONSUMPTION OF WATER FROM THE NEW WATERLINE, A SAMPLE SHALL BE TAKEN AND TESTED FOR BACTERIOLOGICAL QUALITY. RESULTS MUST BE WITHIN STANDARDS OF THE STATE OF OREGON.
13. CONCRETE THRUST BLOCKING SHALL BE PROVIDED AT ALL WATERLINE FITTINGS AS REQUIRED BY CITY STANDARDS. BLOCKING SHALL BE POURED AGAINST UNDISTURBED EARTH AND CLEAR OF JOINT ACCESSORIES. BEARING AREA OF THRUST BLOCK SHALL BE COMPUTED ON THE BASIS OF ALLOWABLE SOIL BEARING PRESSURE.
14. CONTRACTOR TO LEAVE ALL AREAS OF PROJECT FREE OF DEBRIS AND UNUSED CONSTRUCTION MATERIALS.
15. AREAS TO BE LANDSCAPED SHALL BE SMOOTHED AND LEFT TO THE GRADES INDICATED ON THE GRADING PLAN, PLUS OR MINUS 0.1 FOOT.
16. ALL DISTURBED AREAS NOT TO BE LANDSCAPED ARE TO BE SEEDED TO PREVENT EROSION (SEE EROSION CONTROL NOTES ON GRADING PLAN).
17. TRENCH BACKFILL IN PAVED AREAS WILL BE 3/4 INCH TO 0 INCH CRUSHED ROCK COMPACTED TO 95 PERCENT RELATIVE MAXIMUM DENSITY, AASHTO T-99.
18. ANY CHANGES FROM APPROVED PLANS SHALL BE REQUESTED BY THE DESIGN ENGINEER, AND APPROVED BY THE CITY OF WEST LINN'S CITY PROJECT ENGINEER. COMPLEXITY OF MODIFICATION WILL DETERMINE IF REVISED PLANS ARE REQUIRED.
19. ALL SANITARY SEWER PIPE SHALL BE PVC IN ACCORDANCE WITH ASTM SPECIFICATIONS D-3033 AND D-3034.
20. SANITARY SEWER SERVICES SHALL BE 4" PVC WITH A MINIMUM SLOPE OF 2%.
21. STORM SEWER PIPE SHALL BE CONCRETE, ASTM C-14 CLASS III, BELL AND SPIGOT WITH RUBBER O-RINGS.
22. WATER PIPE AND FITTINGS SHALL BE DUCTILE IRON CLASS 52 AND CONFORM TO STANDARD CITY SPECIFICATIONS AND DETAILS.

### INDEX OF SHEETS


1 - TITLE SHEET
2 - STREET & STORM DRAIN PLAN & STREET PROFILE
3 - STORM DRAIN PROFILES
4 - SANITARY SEWER & WATER PLAN & PROFILES
5 - GRADING, EROSION CONTROL & COMPOSITE UTILITY PLAN
6 - DETAILS
7 - DETAILS


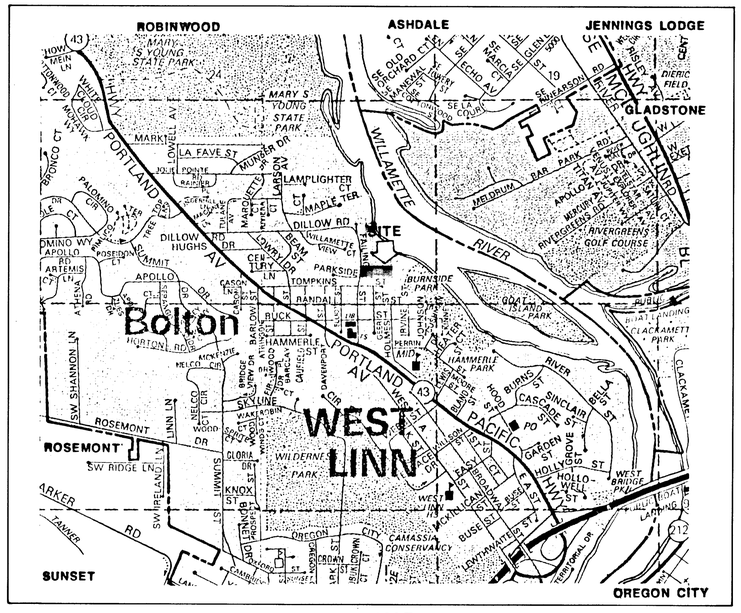


VICINITY MAP

### BENCHMARK

3/4" IRON PIPE IN MONUMENT BOX AT CENTERLINE-CENTERLINE OF BUCK STREET AND BARCLAY STREET, ELEVATION 271.65

These As-Built Plans were compiled from survey data, data collected from others, and periodic observation during construction. It is suggested that these plans be used in conjunction with field verification of location and elevations of improvements in question. These plans are an accurate record of public improvements to the best of my information, knowledge and belief.

Signature

Date 8-17-91

### LEGEND

| DESCRIPTION | PROPOSED | EXISTING |
|---|---|---|
| SANITARY SEWER LINE | SA | SA |
| STORM SEWER LINE | ST | ST |
| WATER LINE | W | W |
| MANHOLE | | |
| CURB INLET | ST | ST |
| INLET | ST | ST |
| CLEANOUT (C.O.) | SA | |
| STORM SEWER CULVERT | | |
| SEWER SERVICE | SA | SA |
| ROOF/FOUNDATION DRAIN | ST | ST |
| GATE VALVE & VALVE BOX | W | W |
| BUTTERFLY VALVE | | |
| CHECK VALVE | W | W |
| AIR RELEASE VALVE | W | W |
| PRESSURE REDUCING VALVE | R W | R W |
| BLOWOFF (B.O.) & ASSEMBLY | W | W |
| REDUCER | W | W |
| BEND W/THRUST BLOCK | | |
| FIRE HYDRANT & ASSEMBLY | | |
| WATER METER | | |
| TELEPHONE LINE | T | T |
| T.V. CABLE | TV | TV |
| POWER LINE | P | P |
| GAS LINE | G | G |
| UTILITY EASEMENT LINE | | |
| SLOPE EASEMENT LINE | | |
| PROPERTY OR R/W LINE | | |
| ℄ OF R/W | | |
| CURB LINE | | |
| SIDEWALK | | |

R.J.B. Designed — Date
J.A.H. Drawn — Date
J.D.S. Checked 7-24-90 — Date

Revisions

TITLE SHEET

AS BUILT
BY: DES DATE: 8-17-91

RIVERVIEW PARK
WEST LINN, OREGON
CRAIG LATOURETTE
6443 S.W. BEAVERTON - HILLSDALE HIGHWAY, # 100
PORTLAND, OREGON 97221

otak incorporated
17355 S.W. Boones Ferry Rd. Lake Oswego, OR 97035 (503) 635 3618
911 E. 8th Street, Vancouver WA 98660 (206) 695 6357
25 Central Way #305 Kirkland WA 98033 (206) 822 4446

Sheet No. 1 of 7

Project No. 2785

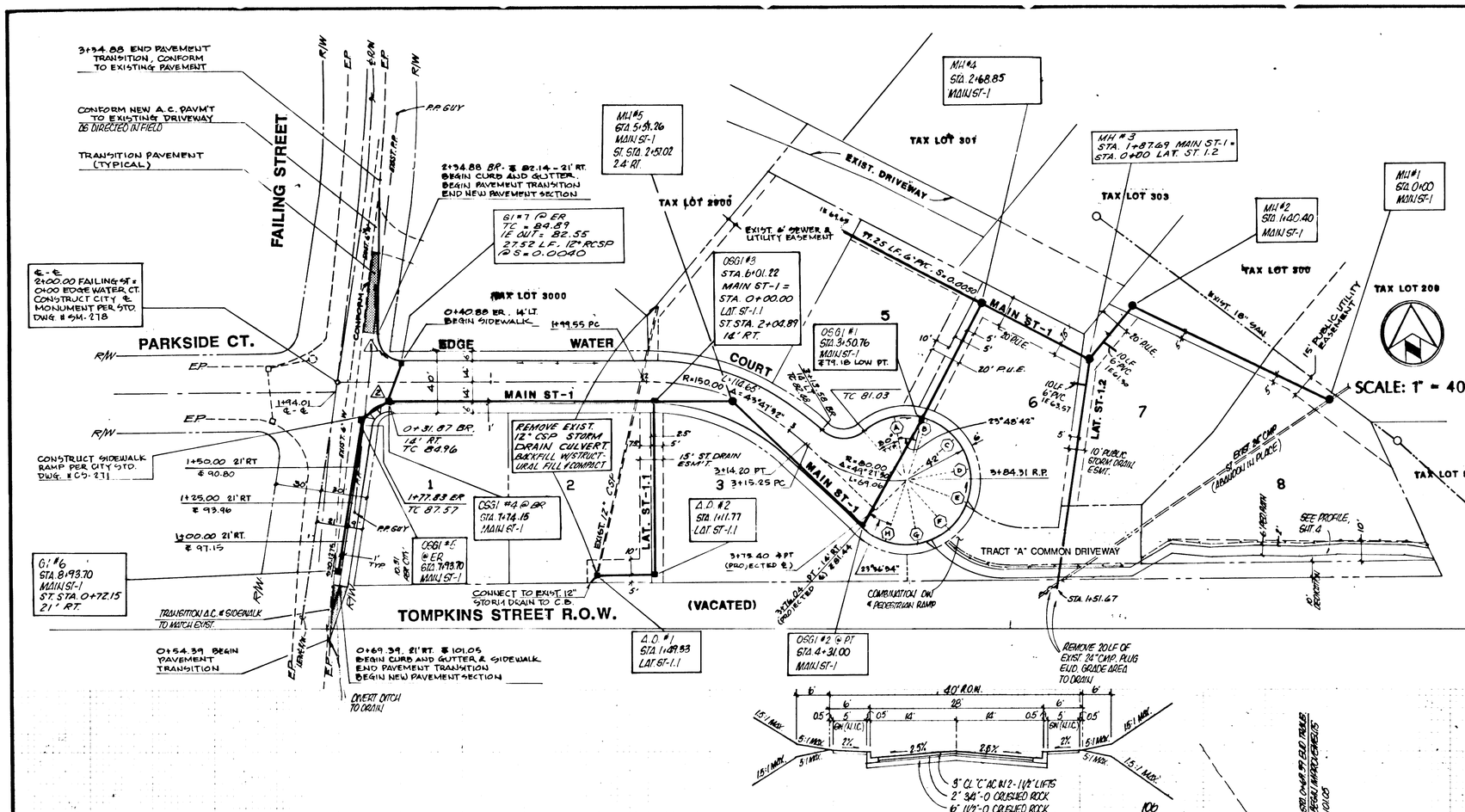


**BULB CURVE DATA**

| | | | | | |
|---|---|---|---|---|---|
| BR | TC | EL. | = | 82.48 | |
| 1/4Δ | TC | EL. | = | 82.24 | R = 81.00' |
| 1/2Δ | TC | EL. | = | 81.92 | Δ = 83°23'08" |
| 3/4Δ | TC | EL. | = | 81.52 | L = 80.66' |
| ER | TC | EL. | = | 81.03 | |
| ⓐ | TC | EL. | = | 79.56 | |
| ⓑ | TC | EL. | = | 79.21 | |
| ⓒ | TC | EL. | = | 79.53 | |
| ⓓ | TC | EL. | = | 79.86 | R = 42.00' |
| ⓔ | TC | EL. | = | 80.19 | Δ = 263°37'19" |
| ⓕ | TC | EL. | = | 80.52 | L = 193.24' |
| ⓖ | TC | EL. | = | 80.85 | |
| ⓗ | TC | EL. | = | 81.18 | |
| TT | TC | EL. | = | 81.44 | |

**CURB RETURN DATA**

| CURVE NO. | RADIUS | DELTA | LENGTH | BR TC EL. | 1/4ΔTC EL. | 1/2ΔTC EL. | 3/4ΔTC EL. | ER TC EL. |
|---|---|---|---|---|---|---|---|---|
| 1 | 15.00' | 98°44'35" | 25.85' | 82.14 | 82.81 | 83.79 | 84.67 | 85.05 |
| 2 | 15.00' | 93°39'34" | 24.52' | 84.96 | 85.19 | 85.91 | 86.82 | 87.57 |

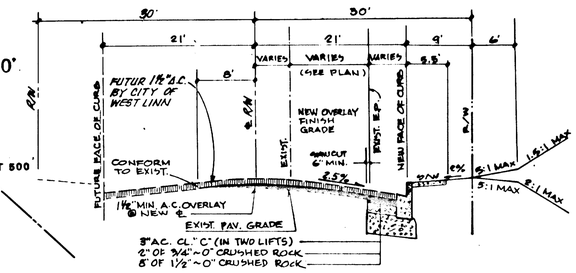


NOTE:
TRANSITION PAVEMENT AREA SHALL HAVE FULL PAVEMENT SECTION AS SHOWN.

**FAILING STREET**
**TYPICAL STREET SECTION**
**STA. 0+69.39 TO STA. 2+34.88**




**EDGE WATER COURT**
**TYPICAL SECTION**

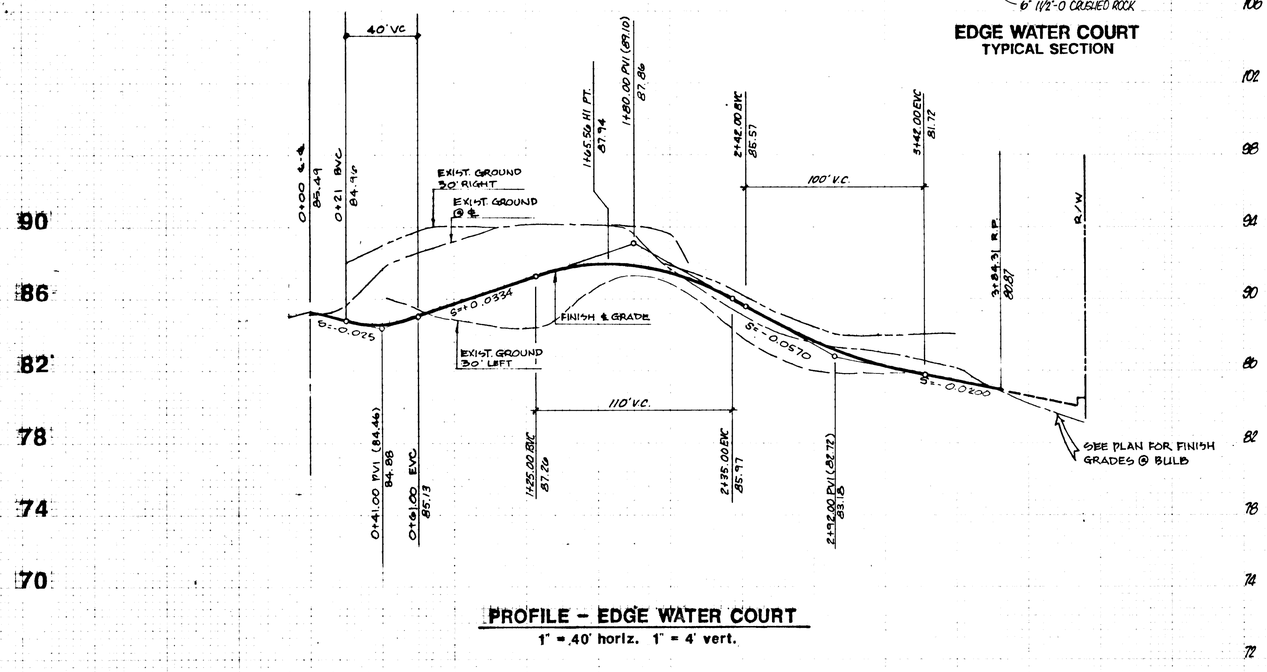


**PROFILE - EDGE WATER COURT**
1" = 40' horiz. 1" = 4' vert.

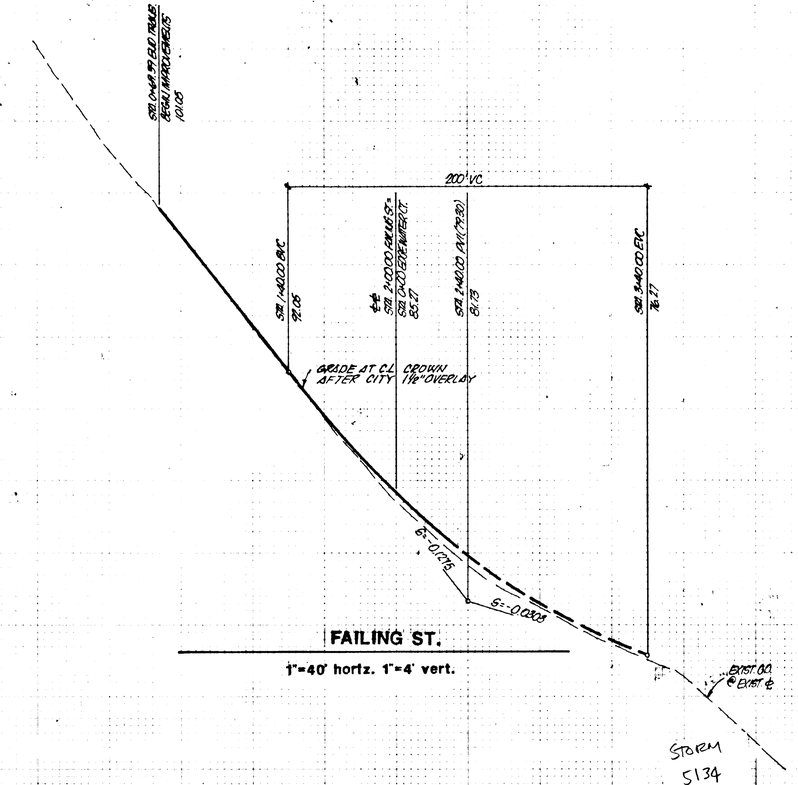


**FAILING ST.**
1" = 40' horiz. 1" = 4' vert.

R.J.B.
Designed — Date
J.A.H.
Drawn — Date
J.D.S. — 7-24-90
Checked — Date

Revisions
Revised Failing St. cross Section to provide for City of West Linn overlay 5-8-91

REGISTERED PROFESSIONAL ENGINEER — OREGON — JULY 25, 1989 — J.D. SMITH

# STREET & STORM DRAIN PLAN & STREET PROFILE

AS BUILT — BY: DES — DATE: 8-19-91

**RIVERVIEW PARK**
**WEST LINN, OREGON**
**CRAIG LATOURETTE**
**6443 S.W. BEAVERTON - HILLSDALE HIGHWAY, # 100**
**PORTLAND, OREGON 97221**

Otak incorporated
17355 S.W. Boones Ferry Rd., Lake Oswego, OR 97035 (503) 635-3618
1011 E. 8th Street, Vancouver, WA 98663 (206) 694-6317
25 Central Way, #305, Kirkland, WA 98033 (206) 822-4446

Sheet No. 2 of 7

Project No. 2788

COLUMBIA BLUEPRINT & SUPPLY

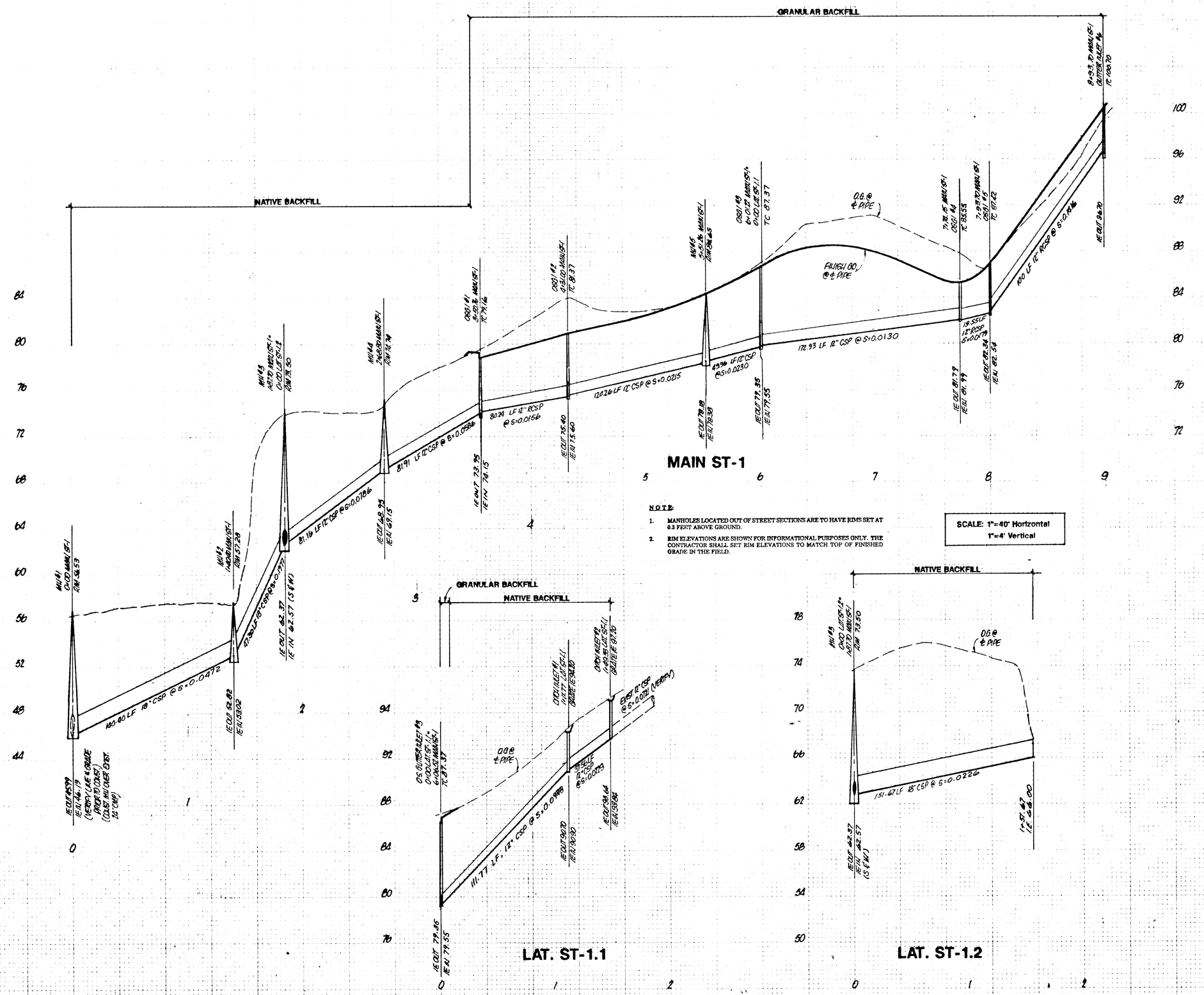


**NOTE:**

1. MANHOLES LOCATED OUT OF STREET SECTIONS ARE TO HAVE RIMS SET AT 0.3 FEET ABOVE GROUND.
2. RIM ELEVATIONS ARE SHOWN FOR INFORMATIONAL PURPOSES ONLY. THE CONTRACTOR SHALL SET RIM ELEVATIONS TO MATCH TOP OF FINISHED GRADE IN THE FIELD.

SCALE: 1"=40' Horizontal
1"=4' Vertical

| | |
|---|---|
| JDS Designed | Date |
| SWS Drawn | 11.1.90 Date |
| JDS Checked | 11.13.90 Date |

Revisions

REGISTERED PROFESSIONAL ENGINEER 15116 OREGON JULY 25, 1990 J.D. SMITH

# STORM DRAIN PROFILES

AS BUILT
BY: DES DATE: 8-19-91

# RIVERVIEW PARK
## WEST LINN, OREGON
CRAIG LATOURETTE
6443 S.W. BEAVERTON - HILLSDALE HIGHWAY, #100
PORTLAND, OREGON 97221

otak incorporated
engineers planners landscape architects surveyors
12350 S.W. Boones Ferry Rd. Lake Oswego, OR 97321 (503) 635-3618
101 E. 8th Street Vancouver WA 98660 (206) 695-0357
11050 Main Street #215, Bellevue WA 98004 (206) 455-5340

3 of 7
Sheet No.

2788
Project No.

COLUMBIA BLUEPRINT & SUPPLY

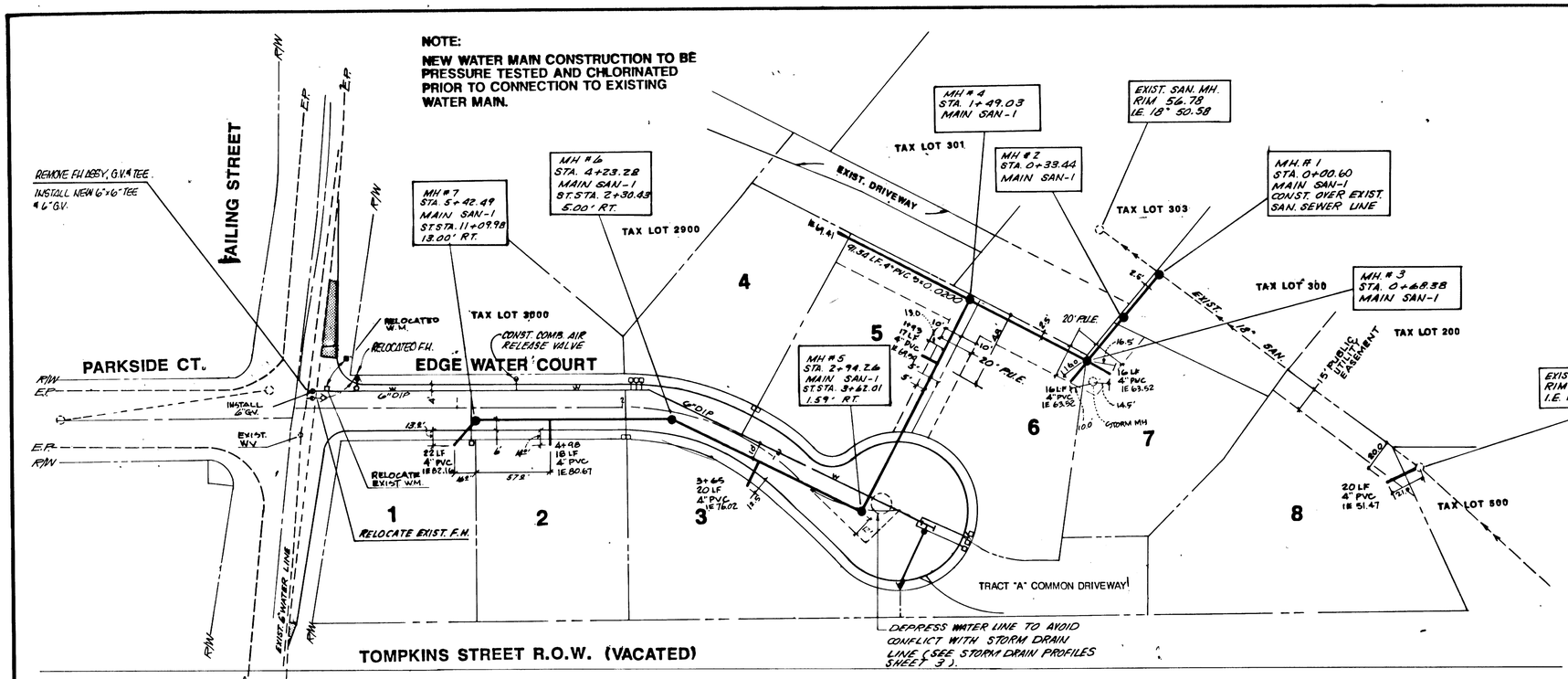


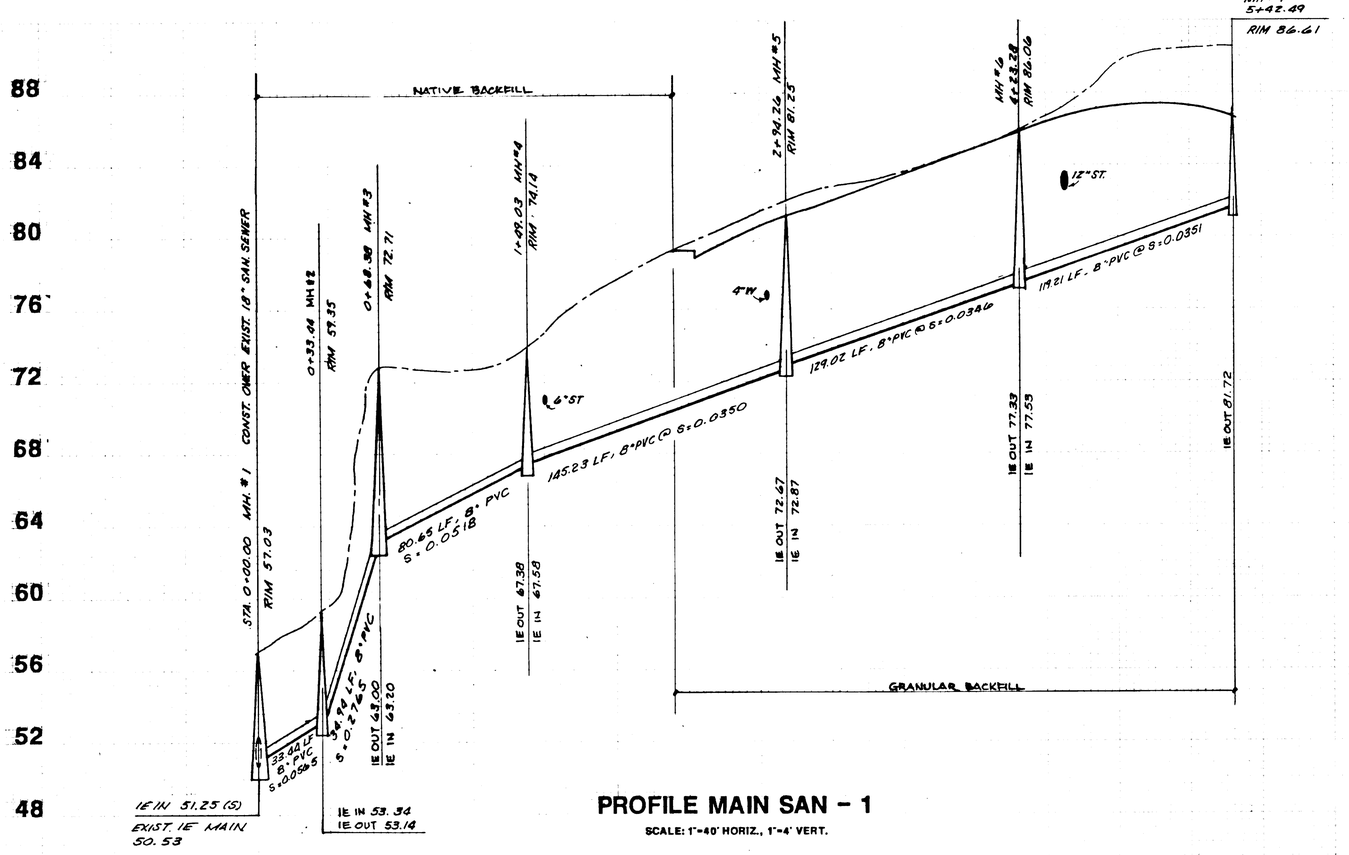


## PROFILE MAIN SAN - 1

SCALE: 1"=40' HORIZ., 1"=4' VERT.

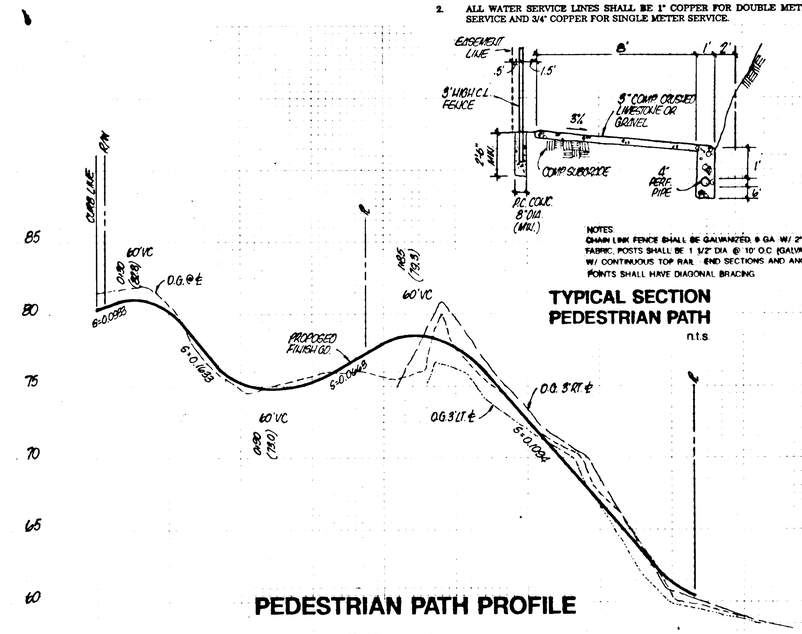


## TYPICAL SECTION PEDESTRIAN PATH

n.t.s.

## PEDESTRIAN PATH PROFILE

SCALE: 1"=40' Horizontal
1"=5' Vertical

SCALE: 1"=40' H.
1"=4' V.

WATER, SS
5134

**NOTE:**

1. ALL SANITARY SERVICE LINES SHALL BE 4" PVC UNLESS OTHERWISE SHOWN ON PLAN.
2. ALL WATER SERVICE LINES SHALL BE 1" COPPER FOR DOUBLE METER SERVICE AND 3/4" COPPER FOR SINGLE METER SERVICE.

**NOTE:**

1. MANHOLES LOCATED OUT OF STREET SECTIONS ARE TO HAVE RIMS SET AT 0.3 FEET ABOVE GROUND.
2. RIM ELEVATIONS ARE SHOWN FOR INFORMATIONAL PURPOSES ONLY. THE CONTRACTOR SHALL SET RIM ELEVATIONS TO MATCH TOP OF FINISHED GRADE IN THE FIELD.

| | |
|---|---|
| R.J.B. Designed | Date |
| J.A.H. Drawn | Date |
| J.D.S. Checked | 7-24-90 Date |

Revisions

REGISTERED PROFESSIONAL ENGINEER 15119 OREGON JULY 25, 1990 J.D. SMITH

# SANITARY SEWER PLAN & PROFILES

AS BUILT BY: DES DATE: 8-8-91

**RIVERVIEW PARK**
WEST LINN, OREGON
CRAIG LATOURETTE
6443 S.W. BEAVERTON - HILLSDALE HIGHWAY, # 100
PORTLAND, OREGON 97221

otak incorporated
17355 S.W. Boones Ferry Rd. Lake Oswego, OR 97035 (503) 635 3618
101 E. 8th Street, Vancouver WA 98660 (206) 695 6357
21 Central Way #205, Kirkland, WA 98033 (206) 827-4448

Sheet No. **4 of 7**

Project No. 2788

COLUMBIA BLUEPRINT & SUPPLY

## GRADING NOTES

- All elevations and grade lines shown are finished grade of paved areas or ground line.
- Grading in the paved areas shall be to subgrade. The grading in all other areas shall be to the lines shown.
- Topsoil (12 inch depth) shall be placed in a 10-foot strip behind the curbs. Topsoil material shall be approved by the engineer, prior to placement.
- The subgrade of paved areas, located in cut sections, shall be scarified to a depth of 6 inches, rolled and compacted to 95 percent relative maximum density Aashto T-99. All fill sections shall be compacted to 95 percent relative maximum density Aashto T-99.
- Soft spots in the subgrade of paved areas will be excavated to a depth of 18 inches and backfilled with 4"-0" crushed rock, compacted as directed by the engineer.
- Organic material (trees, brush roots, stumps, etc.) Shall be removed from the site. Stripping shall generally be 9 inches, but may be deeper in wooded areas. Stripping shall be removed from the construction area as directed by the engineer.
- Any additional material required to fill the site shall come from a borrow areas as directed by the engineer and/or owner. The borrow area shall be restored as directed by the engineer at no additional cost to the owner.
- Permits required to haul material from the site shall be obtained by the contractor from the county, state, and other agencies as needed. All flagging and traffic control required shall be provided by the contractor.

## EROSION CONTROL GENERAL NOTES

- Approval of this erosion/sedimentation control (ESC) plan does not constitute approval of permanent road or drainage design (e.g. size and location of roads, pipes, restrictors, channels, retention facilities, utilities, etc).
- The implementation of these ESC plans and the construction, maintenance, replacement, and upgrading of these ESC facilities is the responsibility of the applicant/contractor until all construction is approved.
- The boundaries of the clearing limits shown on this plan shall be clearly flagged in the field prior to construction. During the construction period, no disturbance beyond the flagged clearing limits shall be permitted. The flagging shall be maintained by the applicant/contractor for the duration of construction.
- The ESC facilities shown on this plan must be constructed in conjunction with all clearing and grading activities, and in such a manner as to insure that sediment laden water does not enter the drainage system or violate applicable water standards (OAR 30-41-455).
- The ESC facilities shown on this plan are the minimum requirements for anticipated site conditions. During construction period, these ESC facilities shall be upgraded as needed for unexpected storm events.
- The ESC facilities shall be inspected daily by the applicant/contractor and maintained as necessary to ensure their continued functioning.
- The ESC facilities on inactive sites shall be inspected and maintained a minimum of once a month or within the 48 hours following a storm event.
- At no time shall more than one foot of sediment be allowed to accumulate within a catch basin. All catch basins and conveyance lines shall be cleaned prior to paving. The cleaning operation shall not flush sediment laden water into the downstream system.
- Stabilized construction entrances shall be installed at the beginning of construction and maintained for the duration of the project. Additional measures may be required to insure that all paved areas are kept clean for the duration of the project.

## EROSION CONTROL AND POLLUTION CONTROL MEASURES

### Erosion Control Measure for Disturbed Areas

- All disturbed slopes greater than 5:1 that have been graded and compacted prior to October 1st shall be hydroseeded using the following specifications.

  A. Seeding shall not be done between October 27 and March 15, nor during windy weather or when the ground is frozen, excessively wet, or otherwise untillable.

  B. Seed may be sown by the following method:

  Hydro-seeded which utilizes water as the carrying agent, and maintains continuous agitation through paddle blades. It shall have an operating capacity sufficient to agitate, suspend, and mix into a homogeneous slurry, the specified amount of seed and water or other material. Distribution and discharge lines shall be large enough to prevent stoppage and shall be equipped with a set of hydraulic discharge spray nozzles which will provide a uniform distribution of the slurry.

  C. Grass seed shall be seeded at the rate of 6 lbs per 1,000 square feet.

  80 percent Tara-Dwarf Perennial Rye
  20 percent Ensyiva Creeping Red Fescue

  D. Wood cellulose fiber shall be applied at the rate of 2,000 lbs per acre (Pacific Wood Fiber, Spra-Mulch -X-100, or Weyerhaeuser Silva Fiber or approved). A straw mulch fiber may be used at an application rate of 4,000 lbs per acre.

  E. A tackifier is to be added to the slurry when hydroseed is applied to slopes 3:1 or steeper at the rate of 40 lbs per acre.

  F. The exact time for seeding will be determined by actual weather conditions. The normal satisfactory period for seeding shall be considered between March 15 to June 1 and September 1 to October 15, unless otherwise authorized by the owner.

  G. When delays in operations carry the work beyond the most favorable planting season, or when weather conditions are such that satisfactory results are not likely to be obtained for any stage of the seeding operations, the contractor will comply with the erosion control matrix charge for construction during winter months.

  H. The contractor shall protect all seeded areas from erosion until final inspection and acceptance has been made. Areas damaged by erosion shall be repaired by the contractor at his own expense.

- All disturbed areas with slopes less than 5:1 that have been graded and compacted shall be seeded prior to October 1 with the same seed and fertilizer mix as used in hydroseeding and spread evenly over the site.
- All disturbed areas not graded and compacted prior to October 1 shall comply with the erosion control matrix chart for winter construction.
- Erosion control protection shall be considered complete and successful when a grass mat has been established.

## SEDIMENT FENCES

- The filter fabric shall be purchased in a continuous roll cut to length of the barrier to avoid use of joints. When joints are necessary, filter cloth shall be spliced together only at a support post, with a minimum 6-inch overlap, and both ends securely fastened to the post.
- The filter fabric fence shall be installed to follow the contours where feasible. The fence posts shall be spaced a maximum of 6 feet apart and driven securely into the ground a minimum of 30 inches.
- A trench shall be excavated, roughly 8 inches wide by 12 inches deep, upslope and adjacent to the wood post so flow the filter fabric to be buried.
- When standard strength filter fabric is used, a wire mesh support fence shall be fastened securely to the upslope side of the posts using heavy-duty wire staples at lease 1 inch long, tie wire or hog rings. The wire shall extend into the trench a minimum of 4 inches and shall not extend more than 36 inches above the original ground surface.
- The standard strength filter fabric shall be stapled or wired to the fence and 20 inches of the fabric shall be extended into the trench. The fabric shall not extend more than 36 inches above the original ground surface. Filter fabric shall not be stapled to existing trees.
- When extra-strength filter fabric and closer post spacing are used, the wire mesh support fence may be eliminated. In such a case, the filter fabric is stapled or wired directly to the posts with all other provisions of the above standard note for standard strength filter fabric applying.
- Sediment fences shall be removed when they have served their useful purpose, but not before the upslope area has been permanently established.
- Sediment fences shall be inspected by applicant/contractor immediately after each rainfall and at least daily during prolonged rainfall. Any required repairs shall be made immediately.

FIGURE 3-1: Erosion Control Matrix

| SITE SITUATION \ EROSION MEASURES | Construction Entrance | Sediment Fence or Berm at Toe of Disturbed Area | Sediment Fence or Berm At Slope Break >= 20% | Sediment Fence or Berm Spacing should be Closer | Seed & Mulch w/ Bonding & Jute | Seed & Mulch Seed/Fertilizer/Mulch | Erosion Blankets w/ Anchors | Grass Plantings | Sediment Trap Drain area < 3 AC | Sediment Pond Drain area < 10 AC | Covers or Lean-tops Stockpiles (100% NAC) | Establishment Inspection | Sediment Barrier Around Catch Basins | Sediment Barrier in Ditch |
|---|---|---|---|---|---|---|---|---|---|---|---|---|---|---|
| SINGLE FAMILY/DUPLEX RES. | | | | | | | | | | | | | | |
| 50% + of site, slope<20% | x | x | | | * | | | | 0 | NA | NA | | x | |
| 50% + of site, slope>20% | x | x | | | | * | | | 0 | NA | NA | 0 | x | |
| <6000 sq. ft. DISTURBED AREA | x | x | * | | * | | 0 | 0 | NA | NA | | | x | |
| OTHER DISTURBED SITES | | | | | | | | | | | | | | |
| slope <6% | x | x | | | | | 0 | 0 | 0 | 0 | | | x | |
| <8% | x | x | | x 700' | x | | 0 | 0 | 0 | 0 | | | x | |
| <10% | x | x | | x 450' | NA | * | 0 | 0 | 0 | 0 | | | x | |
| <12% | x | x | | x 300' | NA | * | 0 | 0 | 0 | 0 | | | x | |
| <15% | x | x | | x 200' | NA | * | 0 | 0 | 0 | 0 | | | x | |
| <20% | x | x | | x 150' | NA | * | 0 | 0 | 0 | 0 | | | x | |
| <30% | x | x | | x 100' | NA | * | 0 | 0 | 0 | 0 | | | x | |
| <50% | x | x | x | x 50' | NA | * | 0 | 0 | 0 | 0 | 0 | | x | |
| >= 50% | x | x | x | x 25' | NA | | 0 | * | NA | NA | 0 | | x | |
| OTHER | | | | | | | | | | | | | | |
| spoils stock piles | | x | | | | | | * | | | | | | |
| utilities construction | | | | | | | | | | | | | | |
| catch basin drainage | | | | | | | | | | | | | x | |
| direct ditch drainage | | | | | | | | | | | | | | x |

KEY: x Base Measures Year-around Construction; * Oct. 1 to Mar. 31st Measures, Supplemental to x; 0 Option/Alternate to *; NA Not Allowed

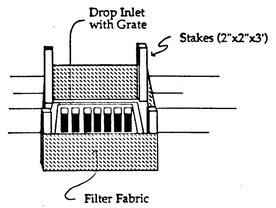


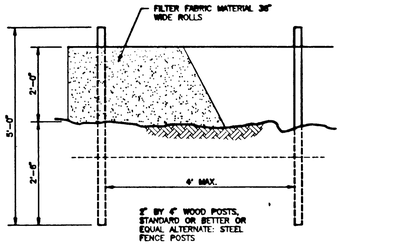


NOTE: BURY BOTTOM OF FILTER MATERIAL IN 6" BY 12" TRENCH

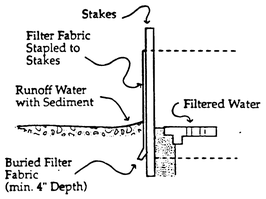


**FILTER FABRIC INLET BARRIER**

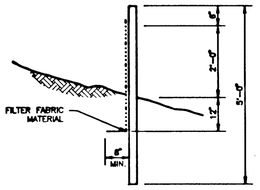


**SEDIMENT FENCE**

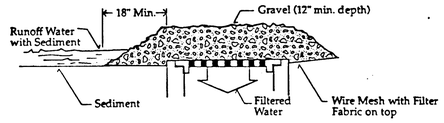


**GRAVEL & WIRE MESH INLET BARRIER**

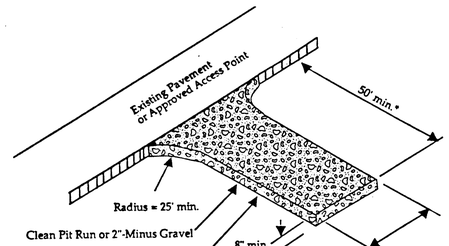


* 20' min. for single family and duplex residential

**GRAVEL CONSTRUCTION ENTRANCE**

SCALE: 1"=40'

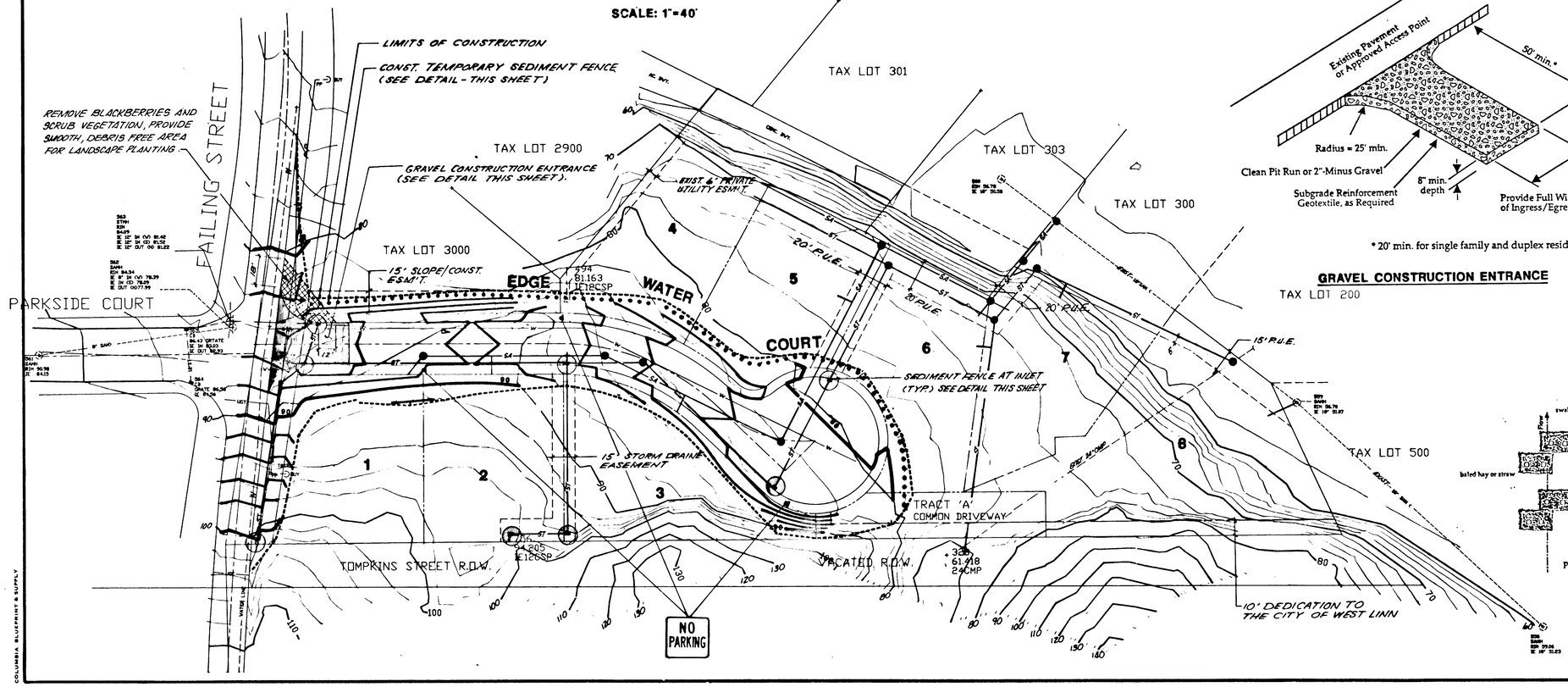


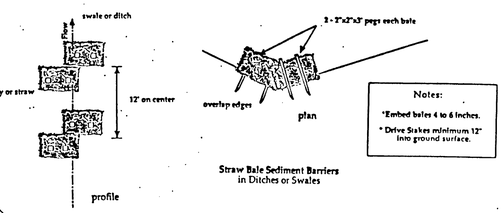


Straw Bale Sediment Barriers in Ditches or Swales

Notes:
- Embed bales 4 to 6 inches.
- Drive Stakes minimum 12" into ground surface.

**STRAW BALE SEDIMENT BARRIERS**

LEGEND

| DESCRIPTION | PROPOSED | EXISTING |
|---|---|---|
| SANITARY SEWER LINE | SA | SA |
| STORM SEWER LINE | ST | ST |
| WATER LINE | W | W |
| MANHOLE | | |
| CURB INLET | ST | ST |
| INLET | ST | ST |
| CLEANOUT (C.O.) | SA | |
| STORM SEWER CULVERT | | |
| SEWER SERVICE | SA | SA |
| ROOF/FOUNDATION DRAIN | ST | ST |
| GATE VALVE & VALVE BOX | W | W |
| BUTTERFLY VALVE | | |
| CHECK VALVE | W | W |
| AIR RELEASE VALVE | W | W |
| PRESSURE REDUCING VALVE | W | W |
| BLOWOFF (B.O.) & ASSEMBLY | W | W |
| REDUCER | W | W |
| BEND W/THRUST BLOCK | | |
| FIRE HYDRANT & ASSEMBLY | | |
| WATER METER | | |
| TELEPHONE LINE | T | T |
| T.V. CABLE | TV | TV |
| POWER LINE | P | P |
| GAS LINE | G | G |
| UTILITY EASEMENT LINE | | |
| SLOPE EASEMENT LINE | | |
| PROPERTY OR R/W LINE | | |
| ℄ OF R/W | | |
| CURB LINE | | |
| SIDEWALK | | |

R.T.B. Designed — Date
J.A.H. Drawn — Date
J.D.S. Checked — Date 7-24-90.

Revisions

# GRADING, EROSION CONTROL, & COMPOSITE UTILITY PLAN

AS BUILT BY: DCS DATE: 6-4-91

**RIVERVIEW PARK**
WEST LINN, OREGON
CRAIG LATOURETTE
6443 S.W. BEAVERTON - HILLSDALE HIGHWAY, # 100
PORTLAND, OREGON 97221

otak incorporated
17355 S.W. Boones Ferry Rd. Lake Oswego, OR 97035 (503) 635-3618
101 E. 8th Street, Vancouver WA 98660 (206) 695-9207
25 Central Way #300, Kirkland WA 98033 (206) 827-4448

Sheet No. 5 of 7

Project No. 2788

COLUMBIA BLUEPRINT & SUPPLY

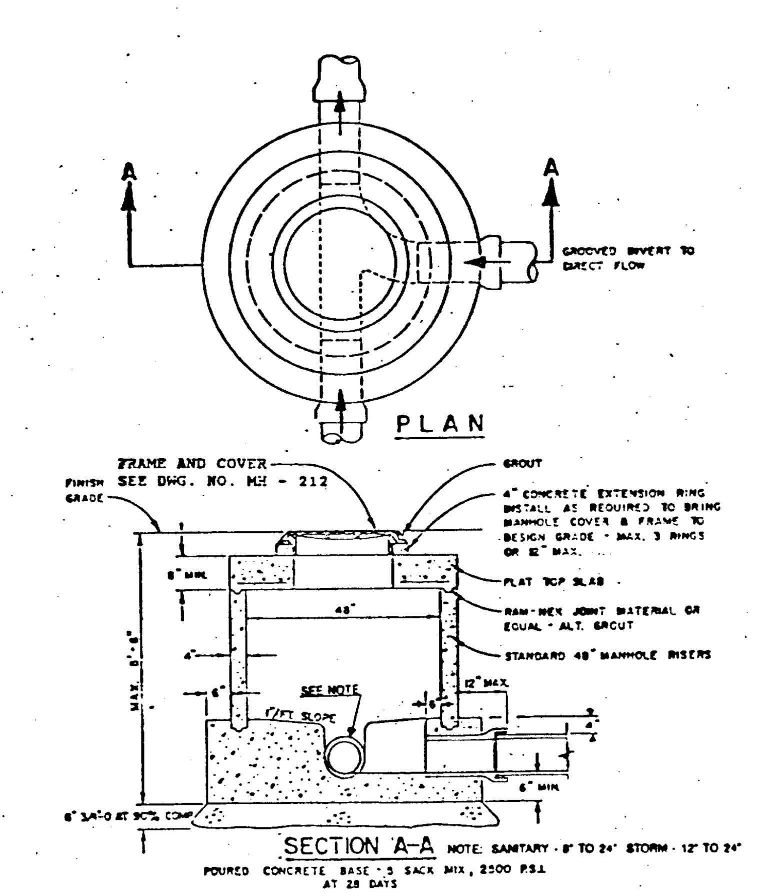


CITY OF WEST LINN — SHALLOW MANHOLE

DRAWN BY DDP DATE 5-20-87
CHECKED BY DKK DATE 5-27-87
APPROVED BY Earl Reed DATE 5-27-87
DWG. NO. MH - 210

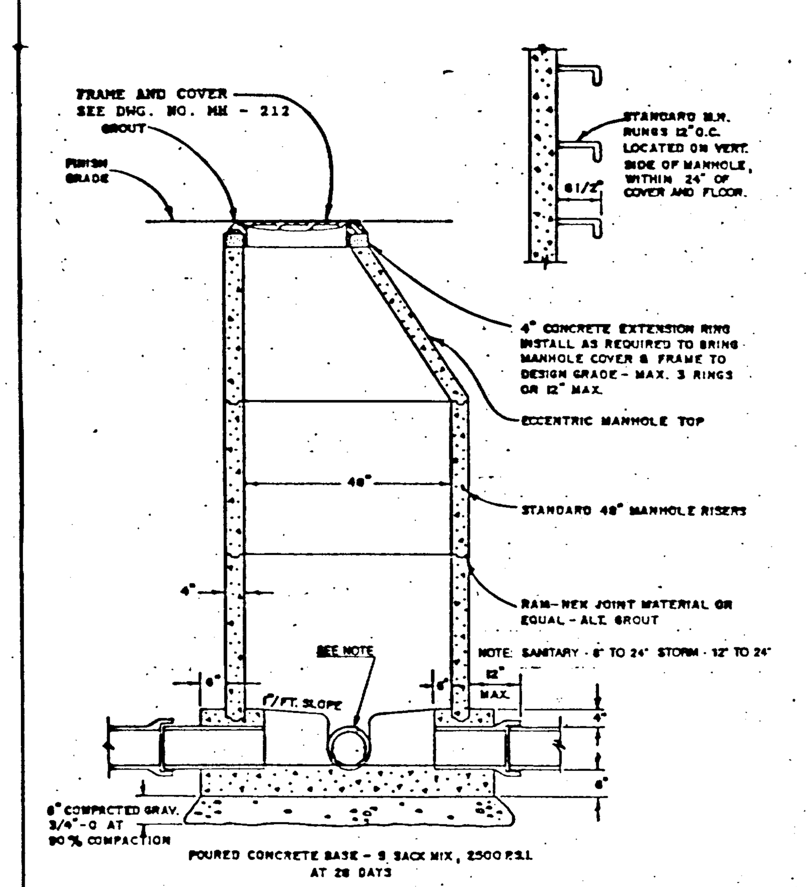


CITY OF WEST LINN — STANDARD MANHOLE

DRAWN BY DDP DATE 5-20-87
CHECKED BY DKK DATE 5-27-87
APPROVED BY Earl Reed DATE 5-27-87
DWG. NO. MH - 209

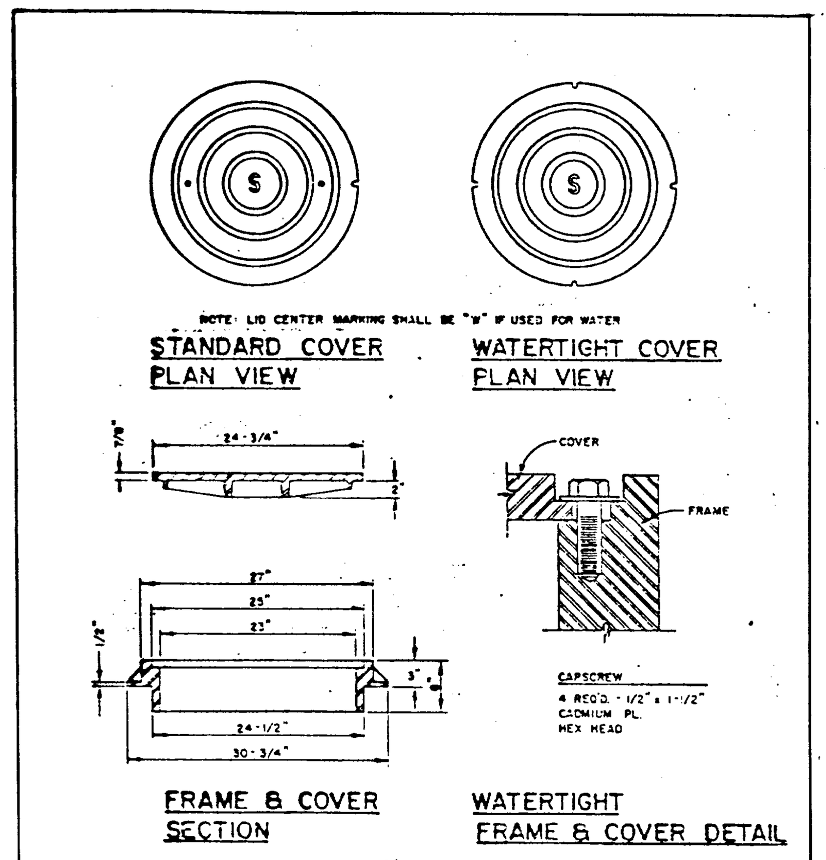


CITY OF WEST LINN — MANHOLE FRAME & COVER

DRAWN BY DDP DATE 5-20-87
CHECKED BY DATE
APPROVED BY Earl Reed DATE 5-27-87
DWG. NO. MH - 212

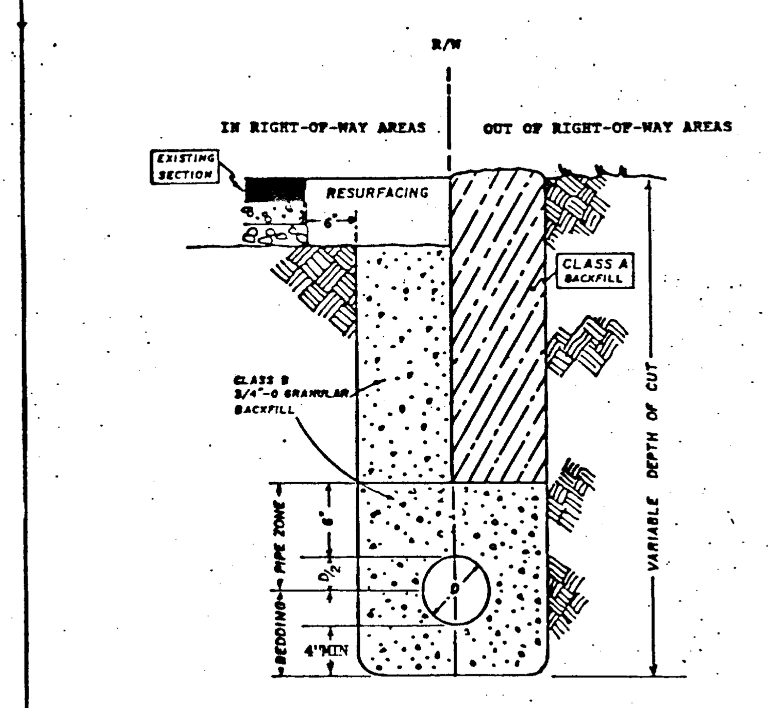


CITY OF WEST LINN — PIPE BEDDING AND BACKFILL DETAILS

DRAWN BY DDP DATE 5-20-87
CHECKED BY DKK DATE 5-27-87
APPROVED BY Earl Reed DATE 5-27-87
DWG. NO. PB - 280

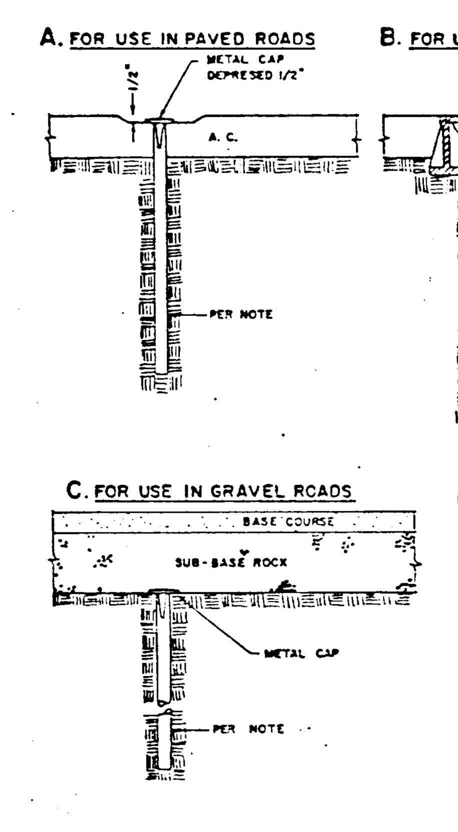


NOTE: ALL MONUMENTS SHALL USE EITHER 5/8" DIA. X 30" LONG IRON ROD OR 3/4" I. DIA. X 30" LONG IRON PIPE.

ALL MONUMENTS SHALL BE IN ACCORDANCE WITH ORS 209.250(4).

CITY OF WEST LINN — CENTERLINE SURVEY MONUMENTS

DRAWN BY DDP DATE
CHECKED BY DATE
APPROVED BY Earl Reed DATE 5-27-87
DWG. NO. SM - 278

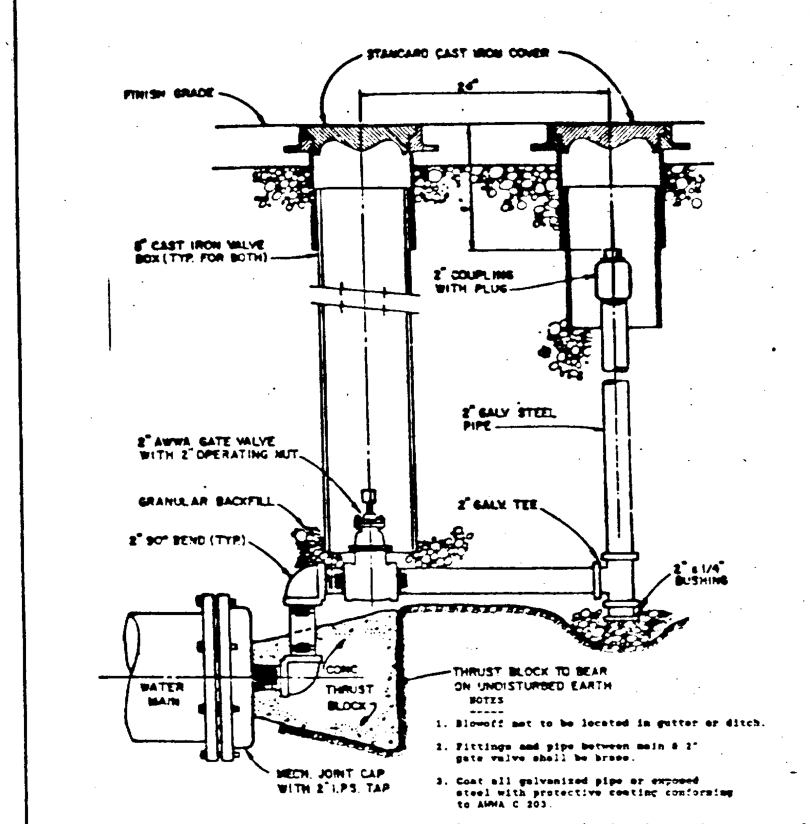


NOTES

1. Blowoff not to be located in gutter or ditch.
2. Fittings and pipe between main & 2" gate valve shall be brass.
3. Coat all galvanized pipe or exposed steel with protective coating conforming to AWWA C 203.
4. Restrain mechanical joint plug to pipe.
5. This standard applicable for pipe sizes thru 6".

CITY OF WEST LINN — BLOWOFF

DRAWN BY DDP DATE 5-20-87
CHECKED BY DATE
APPROVED BY Earl Reed DATE 5-27-87
DWG. NO. BO - 301

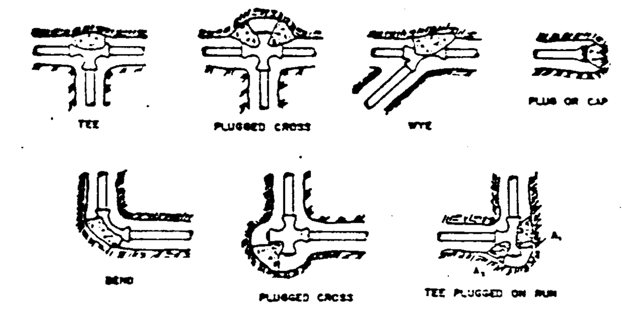


BEARING AREA OF THRUST BLOCK (in sq. ft.)

| FITTING SIZE (in.) | TEE, WYE, PLUG or CAP | 90° BEND, PLUGGED CROSS | TEE PLUGGED ON RUN A | TEE PLUGGED ON RUN $A_1$ | 45° BEND | 22½° BEND | 11¼° BEND |
|---|---|---|---|---|---|---|---|
| 4 | 1.0 | 1.4 | 1.9 | 1.4 | 1.0 | - | - |
| 6 | 2.1 | 3.0 | 4.3 | 3.0 | 1.6 | 1.0 | - |
| 8 | 3.8 | 5.3 | 7.6 | 5.4 | 2.9 | 1.5 | 1.0 |
| 10 | 5.9 | 8.4 | 11.8 | 8.4 | 4.6 | 2.4 | 1.2 |
| 12 | 8.5 | 12.0 | 17.0 | 12.0 | 6.6 | 3.4 | 1.7 |
| 14 | 11.5 | 16.3 | 23.0 | 16.3 | 8.9 | 4.6 | 2.3 |
| 16 | 15.0 | 21.3 | 30.0 | 21.3 | 11.6 | 6.0 | 3.0 |
| 18 | 19.0 | 27.0 | 38.0 | 27.0 | 14.6 | 7.6 | 3.8 |
| 20 | 23.5 | 33.3 | 47.0 | 33.3 | 18.0 | 9.4 | 4.7 |
| 24 | 34.0 | 48.0 | 68.0 | 48.0 | 26.2 | 13.6 | 6.8 |

NOTES

1. Concrete shall be poured against undisturbed earth.
2. Concrete shall be kept clear of joint and accessories.
3. The required thrust bearing area for special connections is shown encircled on the plans. For example, (15) indicates 15 SQ. FT. bearing area required.
4. If not shown on plans, required bearing area at fitting shall be as indicated above, adjusted if necessary to conform to the test pressures and allowable soil bearing stresses stated in the special specifications.
5. Bearing areas and special blocking details shown on the plans shall take precedence over this standard.
6. Above bearing areas are based on a test pressure of 150 P.S.I. and an allowable soil bearing stress of 2000 LBS./SQ. FT. To compute bearing areas for different test pressures and soil bearing stresses, use the following equation:

$$\text{BEARING AREA} = \text{TABLE VALUE} \times \frac{\text{TEST PRESSURE}}{150} \times \frac{2000}{\text{SOIL BEARING STRESS}}$$

CITY OF WEST LINN — THRUST BLOCKING

DRAWN BY DDP DATE 5-20-87
CHECKED BY DATE
APPROVED BY Earl Reed DATE 5-27-87
DWG. NO. TB - 302

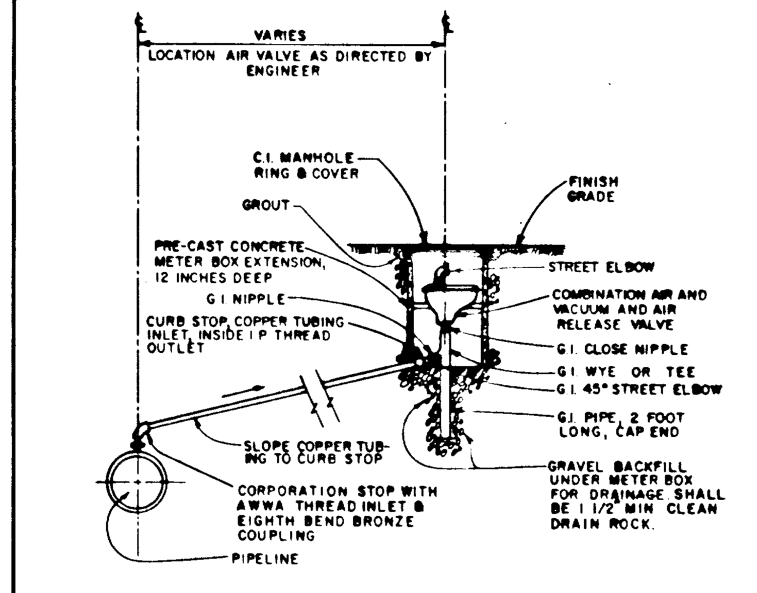


NOTES:

1. CORPORATION STOP, COPPER TUBING, CURB STOP AND GALVANIZED PIPING ALL TO BE OF SAME DIAMETER AS AIR VALVE INLET
2. USE APPROVED JOINTING COMPOUND ON ALL THREADED CONNECTIONS
3. AIR VALVE DETAILS SHOWN ON THE PLANS TAKE PRECEDENCE OVER THE STANDARD DETAIL.
4. IF OFF THE ROAD, USE METER BOX EXTENSION # T-69. IF ON THE ROAD, USE 24" CONCRETE PIPE.

REGISTERED PROFESSIONAL ENGINEER 10013 OREGON Dec. 15, 1978 PAUL S. HAINES

REV. 4-86

DEPARTMENT OF PUBLIC WORKS — CITY OF LAKE OSWEGO

AIR VALVE ASSEMBLY DETAIL (FOR AIR VALVES UP TO & INCLUDING 1")

DRAWN DB — CHECK BC — SCALE NTS — DATE 1981 — SHEET 1 / 1 — DRAWING NO. C-3.02

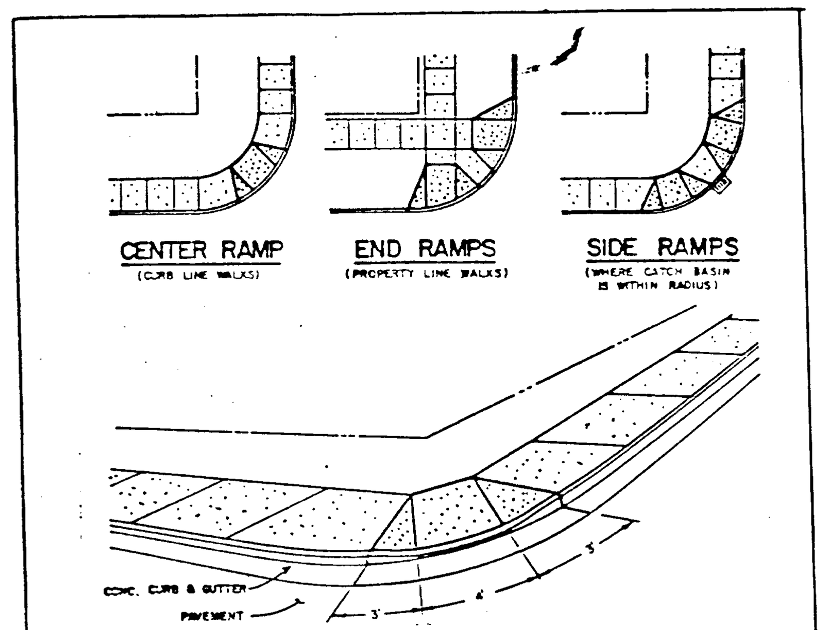


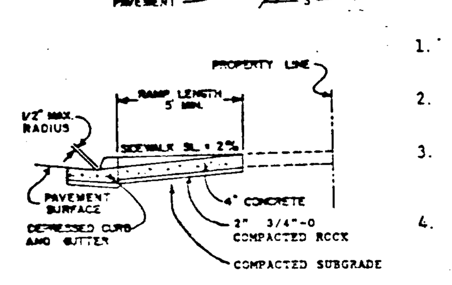


1. For sidewalk details, see Dwg. No.'s CS - 270 & CS - 270.1
2. See Dwg. No. CG - 265 for curb and gutter detail.
3. Ramp width shall be as shown hereon unless otherwise approved by the City Engineer.
4. Concrete shall be 3000 PSI at 28 days, 6 sack mix, slump range 1½" to 3".

CITY OF WEST LINN — SIDEWALK RAMP

DRAWN BY DDP DATE 5-20-87
CHECKED BY DATE
APPROVED BY Earl Reed DATE 5-27-87
DWG. NO. CS - 271

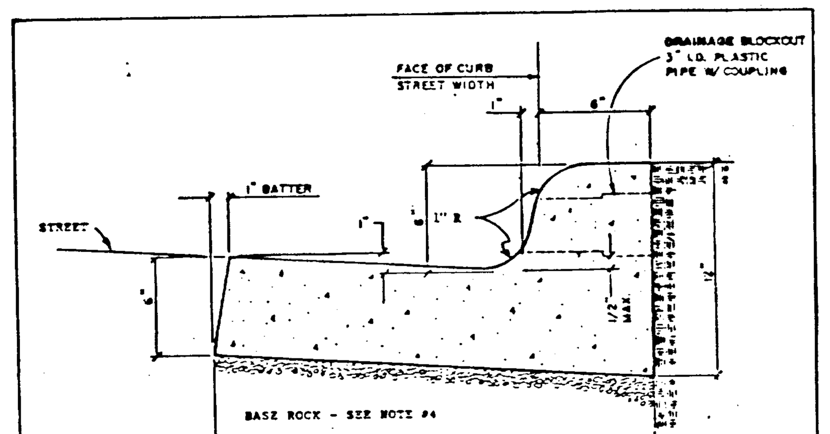


1. When used along medians, gutters may be reduced with prior approval from the City Engineer.
2. Concrete shall have a breaking strength of 3000 PSI after 28 days.
3. CONTRACTION JOINTS
   - A. To be provided:
     1) at each point of tangency of the curb.
     2) at each cold joint.
     3) at each side of inlet structures.
     4) at both sided of an approach.
   - B. Spacing to be not more than 15 feet.
   - C. The depth of the joint shall be at least 1 1/2".
4. Base rock - 1 1/2" minus, 95% compaction. Rock shall be to subgrade of street structure or 4" in depth, whichever is greater.
5. Drainage block - 3" dia. plastic pipe.
   - A. Drainage access through existing curbs shall be by the following:
     1) core drilling.
     2) vertical saw-cut of curb 18" each side of drain & repoured to full depth of curb.

CITY OF WEST LINN — CURB & GUTTER

DRAWN BY DDP DATE
CHECKED BY DATE
APPROVED BY Earl Reed DATE 5-27-87
DWG. NO. CG - 265

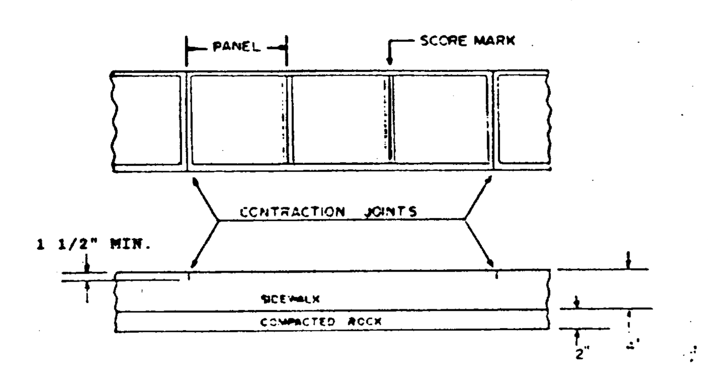


NOTES

1. EXPANSION JOINTS SHALL NOT BE USED.
2. 1 1/2" MIN. DEEP CONTRACTION JOINTS SHALL BE PLACED AT SIDES OF DRIVEWAY APPROACHES, UTILITY VAULTS, WHEEL-CHAIR RAMPS, & AT TRANSVERSE SPACING NOT TO EXCEED 15 LF.
3. CONTRACTION JOINTS SHALL MATCH THE EXISTING CURB JOINTS & TRAVEL THRU FULL WIDTH OF SIDEWALK.
4. PANEL LENGHTS SHALL BE EQUAL TO THE SIDEWALK WIDTH, BUT MAY BE ADJUSTED WITH THE CITY INSPECTORS APPROVAL.
5. SCORE MARKS SHALL BE PLACED PRIOR TO EDGING & BE REMOVED AT SIDES BY THE EDGING.

CITY OF WEST LINN — CONCRETE SIDEWALK JOINT DETAILS

DRAWN BY DDP DATE
CHECKED BY DATE
APPROVED BY Earl Reed DATE 5-27-87
DWG. NO. CS - 270.1

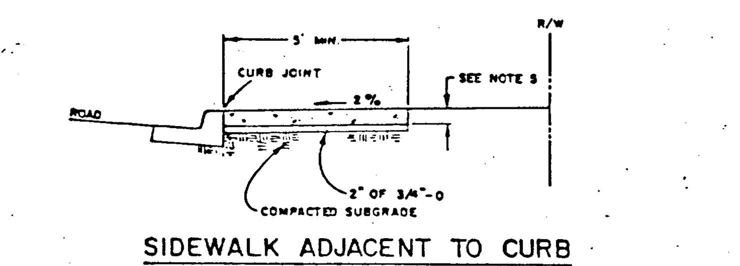


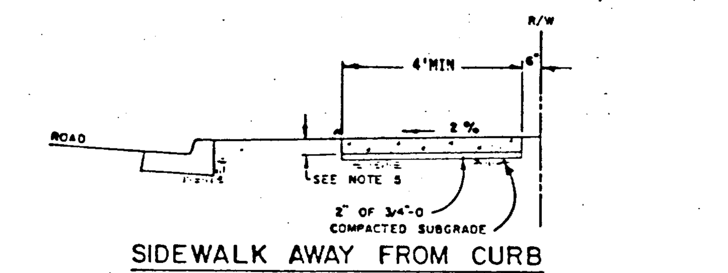


1. Concrete shall be 300 PSI at 28 days. 6 sack mix. slump range of 1 1/2" to 3".
2. Panel lengths shall be equal to the sidewalk width, but may be adjusted with the City Engineers approval.
3. Contraction joints (1 1/2" deep) shall be placed every third panel, with a max. spacing of 15 feet.

   Joints shall also be placed at the sides of driveway approaches, utility vaults, and wheelchair ramps.
4. A curing compound shall be used. White reflective sheeting shall be used in case of rain.
5. For sidewalks adjacent to the curb & poured at the same time as the curb, the joint between then shall be a troweled joint with a min. 1/2" radius.
6. The sidewalk shall have a min. thickness of 6" if mountable curb is used or if the sidewalk is intended as a portion of the driveway. Otherwise, the sidewalk shall have a min. thickness of 4".
7. Drain blockouts in the curb shall be extended to the back of the sidewalk with a 3" dia. plastic pipe at a 2% slope. A contraction joint shall be placed over the pipe.

CITY OF WEST LINN — CONCRETE SIDEWALK

DRAWN BY DDP DATE 5-20-87
CHECKED BY DKK DATE 5-27-87
APPROVED BY Earl Reed DATE 5-27-87
DWG. NO. CS - 270

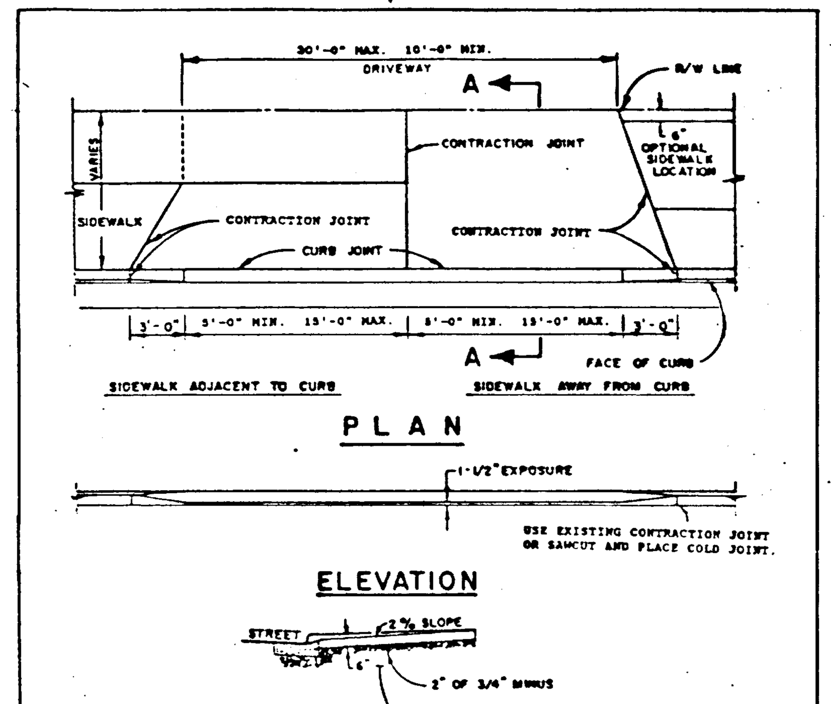


1. CONCRETE SHALL HAVE A MINIMUM BREAKING STRENGTH OF 3000 PSI AFTER 28 DAYS, 6 SACK MIX.
2. CURB JOINT SHALL BE A TROWELED JOINT WITH A MIN. 1/2" RADIUS ALONG BACK OF CURB.
3. DRIVEWAY SHALL BE A MINIMUM 6" THICK.

CITY OF WEST LINN — RESIDENTIAL DRIVEWAY

DRAWN BY DDP DATE 5-20-87
CHECKED BY DATE
APPROVED BY Earl Reed DATE 5-27-87
DWG. NO. DW - 250

R.J.B. — Designed — Date 1/90
J.A.H. — Drawn — Date 1/90
J.D.S. — Checked — Date 7/24/90

Revisions

AS BUILT BY: DES DATE: 8-9-91

# DETAIL SHEET

## RIVERVIEW PARK
## WEST LINN, OREGON

CRAIG LATOURETTE
6443 S.W. BEAVERTON - HILLSDALE HIGHWAY, # 100
PORTLAND, OREGON 97221


otak incorporated — engineers, planners, landscape architects, surveyors
17355 S.W. Boones Ferry Rd, Lake Oswego, OR 97035 (503) 635-3618
101 E. 8th Street, Vancouver, WA 98660 (206) 695-0357
25 Central Way, #305 Kirkland, WA 98033 (206) 822-4446




2788
Project No.


COLUMBIA BLUEPRINT & SUPPLY

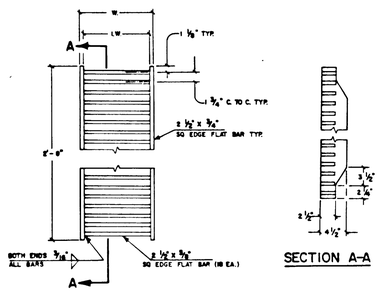


| TYPE ❖ | W. | L.W. |
|---|---|---|
| STANDARD | 1'-1 1/2" | 1'-0" |
| [1] OVERSIZE | 1'-1 1/2" | 1'-0" |

[1] REQUIRES 2 GRATES.

❖ "STANDARD" AND "OVERSIZE" ARE WASHINGTON COUNTY DESIGNATIONS.

WASHINGTON COUNTY
DEPARTMENT OF LAND USE
AND TRANSPORTATION

GRATE

| DATE | CIVIL ENGINEER | DRAWN | APWA NO. | WASH. COUNTY NO. |
|---|---|---|---|---|
| 1/17/86 | Thomas F. Lee | ELS & BS | 1-D (MOD) | D-103 |

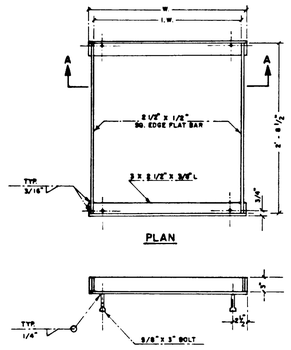


| # TYPE | DIA. PIPE | W. | L.W. |
|---|---|---|---|
| STANDARD | 10"-12" | 1'-1 3/4" | 1'-1 7/8" |
| [1] OVERSIZE | 15"-27" | 2'-4 3/4" | 2'-3 3/8" |

[1] REQUIRES TWO GRATES

# STANDARD & OVERSIZE ARE WASH. CO. DESIGNATIONS

WASHINGTON COUNTY
DEPARTMENT OF LAND USE
AND TRANSPORTATION

FRAME

| DATE | CIVIL ENGINEER | DRAWN | APWA NO. | WASH. COUNTY NO. |
|---|---|---|---|---|
| 1/17/86 | Thomas F. Lee | ELS & BS | 1-C (MOD.) | D-102 |

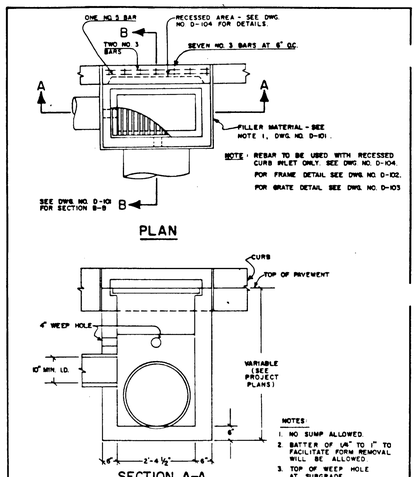


NOTES:
1. NO SUMP ALLOWED.
2. BATTER OF 1/4" TO 1" TO FACILITATE FORM REMOVAL WILL BE ALLOWED.
3. TOP OF WEEP HOLE AT SUBGRADE.

WASHINGTON COUNTY
DEPARTMENT OF LAND USE
AND TRANSPORTATION

GUTTER INLET — ALSO SEE DWG. NO. D-101 & DWG NO. D-104

| DATE | CIVIL ENGINEER | DRAWN | APWA NO. | WASH. COUNTY NO. |
|---|---|---|---|---|
| 1/17/86 | Thomas F. Lee | ELS & BS | 1-A (MOD.) | D-100 |

NOTES:
1. 3/4" PREFORMED JOINT FILLER MATERIAL TO BE USED AS SPECIFIED BY ENGINEER ONLY IN CONC. PAVEMENT OR GUTTER, AND TO EXTEND THROUGH THICKNESS OF CONCRETE.
2. CONST. CATCH BASIN PER DETAIL, BUT WITH DIMENSION "W" TO ACCOMMODATE LARGEST PIPE DIA. SPECIFIED.
3. CONCRETE SHALL ATTAIN A MINIMUM COMPRESSIVE STRENGTH OF 3000 P.S.I. IN 28 DAYS.
4. IF APPROVED BY ENGINEER, WALLS MAY BE POURED AGAINST UNDISTURBED EARTH, EXCEPT FOR THE TOP 6", WHICH SHALL BE FORMED.
5. BACKFILL SHALL BE COMPACTED TO 95% DENSITY THROUGHOUT.
6. OVERSIZE CATCH BASINS: STEPS ARE REQUIRED FOR DEPTH GREATER THAN 4 FEET. INSTALL 2 FT. FROM TOP TO WITHIN 1 FT. OF BOTTOM.

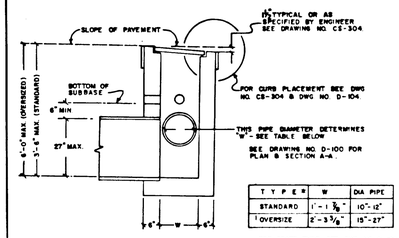


| TYPE * | W. | DIA. PIPE |
|---|---|---|
| STANDARD | 1'-1 7/8" | 10"-12" |
| [1] OVERSIZE | 2'-3 3/8" | 15"-27" |

FOR GRATE TYPE SEE DWG NO. D-103

[1] REQUIRES TWO GRATES. SEE DRAWING NO. D-102.

* "STANDARD" & "OVERSIZE" ARE WASHINGTON CO. DESIGNATIONS.

WASHINGTON COUNTY
DEPARTMENT OF LAND USE
AND TRANSPORTATION

GUTTER INLET — ALSO SEE DWG. NO. D-100 & DWG NO. D-104

| DATE | CIVIL ENGINEER | DRAWN | APWA NO. | WASH. COUNTY NO. |
|---|---|---|---|---|
| 1/17/86 | Thomas F. Lee | ELS & BS | 1-B (MOD.) | D-101 |

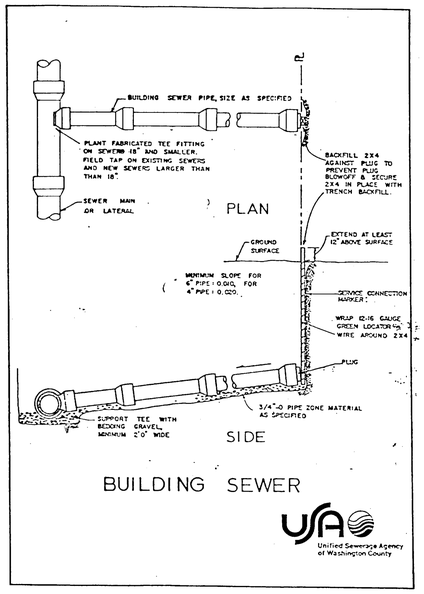


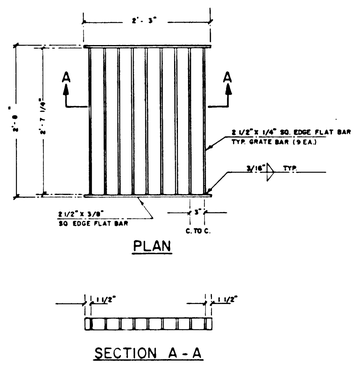


WASHINGTON COUNTY
DEPARTMENT OF LAND USE
AND TRANSPORTATION

GRATE
AREA DRAIN, TYPE II

| DATE | CIVIL ENGINEER | DRAWN | APWA NO. | WASH. COUNTY NO. |
|---|---|---|---|---|
| 1/17/86 | Thomas F. Lee | ELS & BS | 5-B | D-108 |

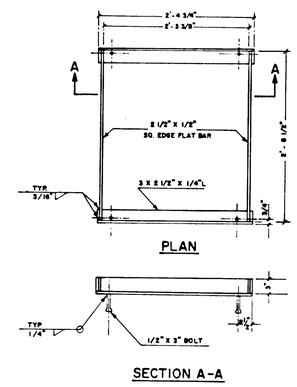


WASHINGTON COUNTY
DEPARTMENT OF LAND USE
AND TRANSPORTATION

FRAME
AREA DRAIN, TYPE II

| DATE | CIVIL ENGINEER | DRAWN | APWA NO. | WASH. COUNTY NO. |
|---|---|---|---|---|
| 1/17/86 | Thomas F. Lee | ELS & BS | 5-A | D-107 |

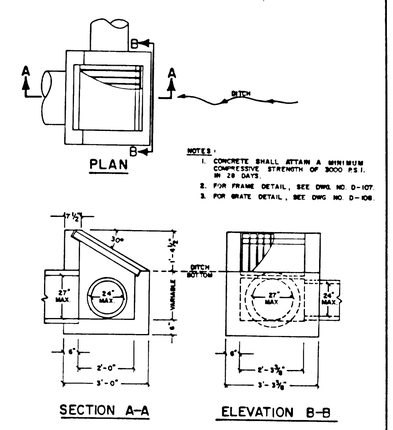


WASHINGTON COUNTY
DEPARTMENT OF LAND USE
AND TRANSPORTATION

AREA DRAIN, TYPE II

| DATE | CIVIL ENGINEER | DRAWN | APWA NO. | WASH. COUNTY NO. |
|---|---|---|---|---|
| 1/17/86 | Thomas F. Lee | ELS & BS | 4 (MOD.) | D-105 |

| | |
|---|---|
| Designed | Date |
| Drawn JOS | Date |
| Checked | Date |

Revisions

DETAILS

AS BUILT
BY: ~~JOS~~ DATE: ~~8-22-86~~

RIVERVIEW PARK
WEST LINN, OREGON
CRAIG LATOURETTE
6443 S.W. BEAVERTON - HILLSDALE HIGHWAY, #100
PORTLAND, OREGON 97221

otak incorporated
engineers planners landscape architects surveyors
17355 S.W. Boones Ferry Rd. Lake Oswego OR 97035 (503) 635 3618
1014 E. 8th Street Vancouver WA 98600 (206) 695 6357
25 Central Way #305 Kirkland WA 98033 (206) 822 4446

7 of 7
Sheet No.

2788
Project No.

COLUMBIA BLUEPRINT & SUPPLY