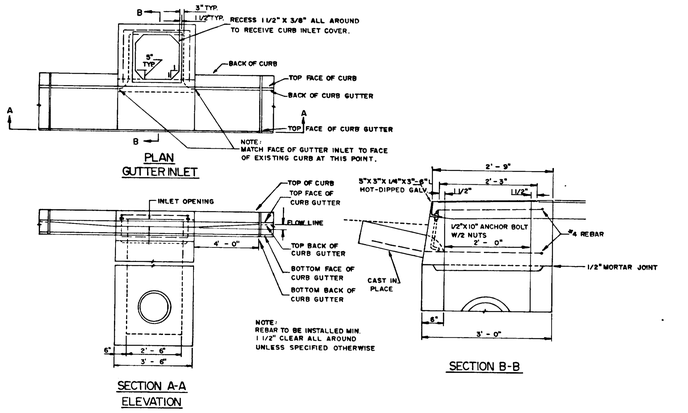

CURB INLET DETAIL
NO SCALE

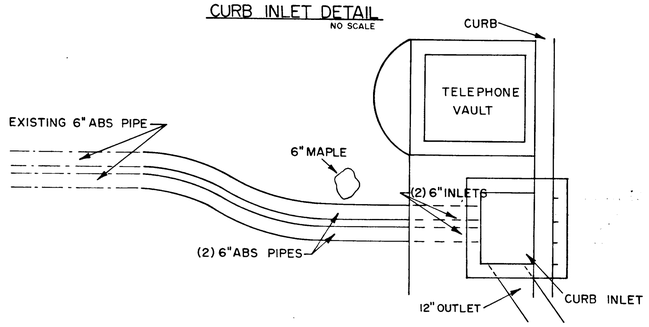

DETAIL I
TOP VIEW NOT TO SCALE

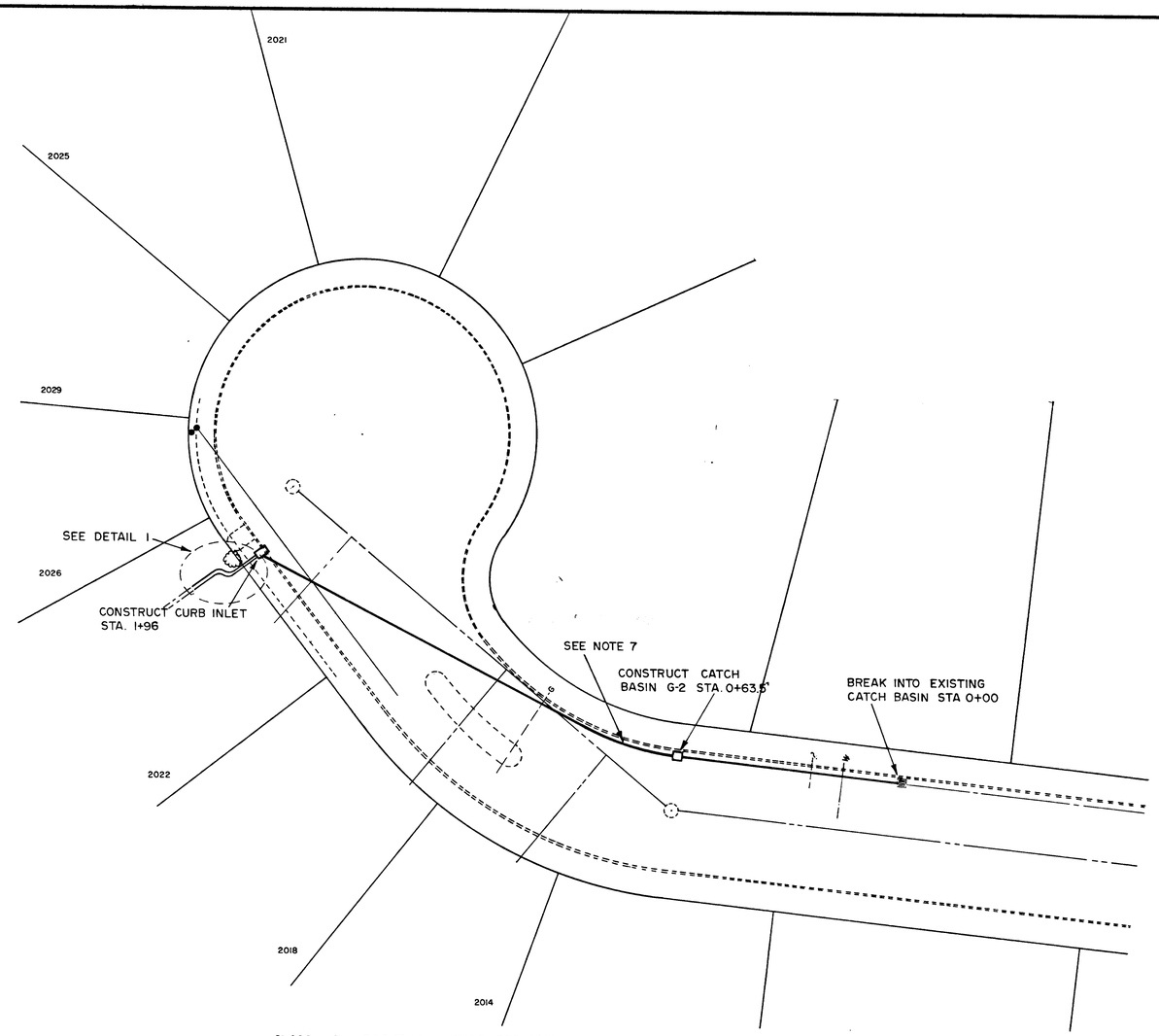

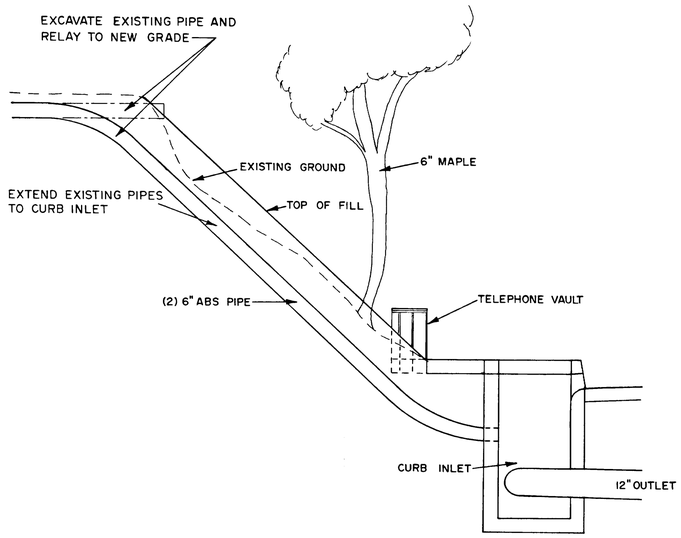

DETAIL I
SIDE VIEW NOT TO SCALE

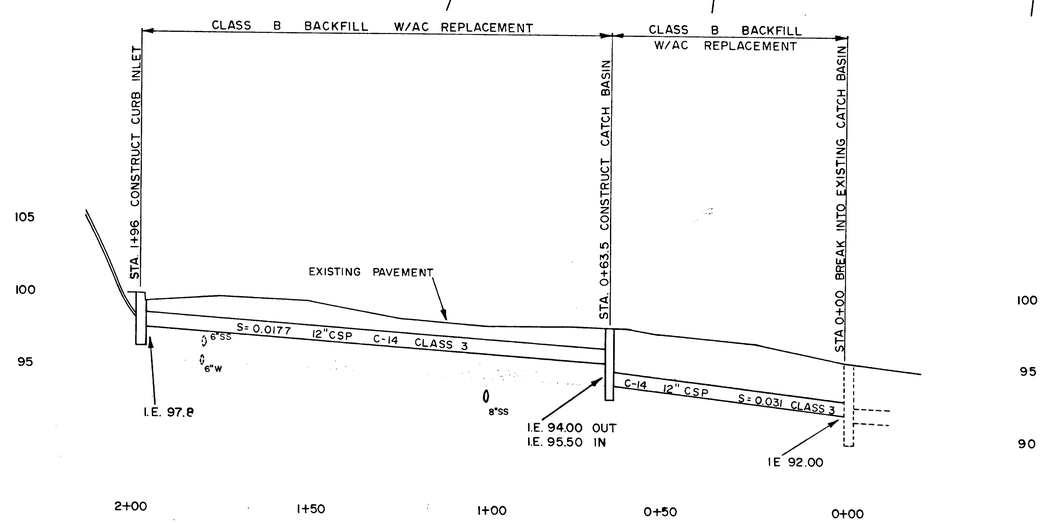

NOTES:

1. ALL PHASES OF CONSTRUCTION SHALL CONFORM WITH 1980 APWA SPECIFICATIONS AND DRAWINGS.
2. NONREINFORCED CONCRETE PIPE SHALL CONFORM TO 1980 APWA DIV III SECTION 305.2.04 AND SHALL BE C-14 CLASS 3.
3. PIPE BEDDING SHALL CONFORM WITH 1980 APWA DIV III SECTION 301.2.03 AND SHALL BE 3/4"-0 CRUSHED ROCK.
4. TRENCH BACKFILL SHALL CONFORM WITH 1980 APWA DIV III SECTION 301.2.04B CLASS B BACKFILL AND SHALL BE 3/4"-0 CRUSHED ROCK.
5. CATCH BASINS SHALL CONFORM WITH 1980 APWA DIV III SECTION 307
6. RESURFACING SHALL CONFORM WITH 1980 APWA DIV III SECTION 309.3.02 AND 309.3.03 AND SHALL BE ASPHALT CONCRETE PAVEMENT.
7. DEFLECT PIPE AS NECESSARY. MAINTAIN MAXIMUM 3/8" JOINT SPACING.

REGISTERED PROFESSIONAL ENGINEER
Earl Russell Reed

DATE	NO.	REVISION	
		CHECKED by DRK 3/2/87	DRAWN & DESIGN JWM
			FILE / DATE 1-25-87
			SCALE HORZ 1"=20' VERT 1"=5'

CITY OF WEST LINN
PUBLIC WORKS DEPARTMENT

PARKSIDE COURT
STORM DRAIN EXTENSION

FROM STREET STA. 2+75 TO 4+95

1/1