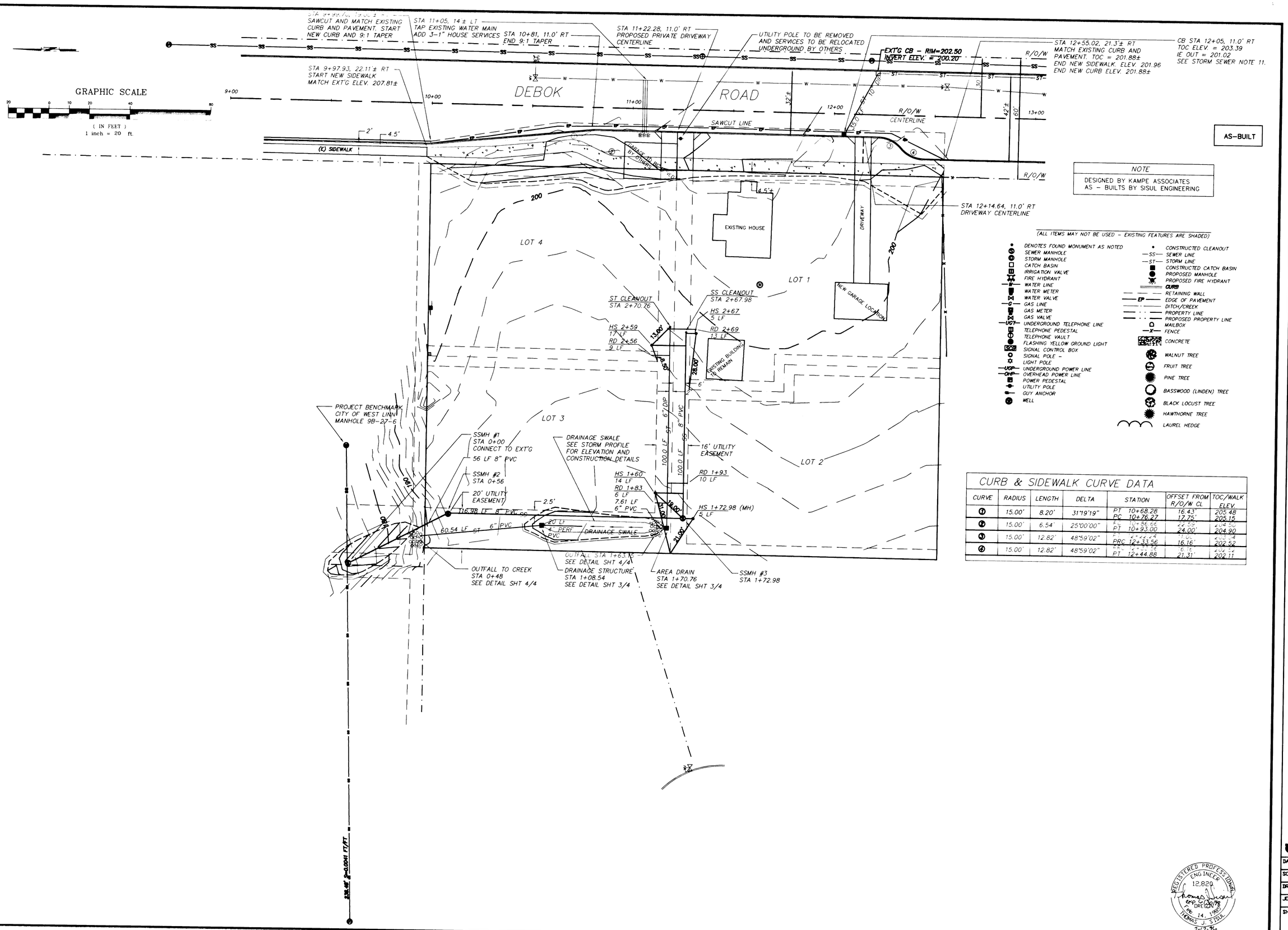

CURB & SIDEWALK CURVE DATA

CURVE	RADIUS	LENGTH	DELTA	STATION	OFFSET FROM R/O/W CL	TOC/WALK ELEV.
1	15.00'	8.20'	31°19'19"	PT 10+68.28 PC 10+76.27	16.43' 17.75'	205.48 205.15
2	15.00'	6.54'	25°00'00"	PT 10+91.46 PT 10+93.00	22.55' 24.00'	204.56 204.90
3	15.00'	12.82'	48°59'02"	PC 12+22.24 PRC 12+33.56	11.00' 16.16'	202.24 202.52
4	15.00'	12.82'	48°59'02"	PRC 12+34.86 PT 12+44.88	6.16' 21.31'	202.52 202.11

REVISIONS	BY
AS-BUILT 7/17/96	LD

NELSON'S ACRE SUBDIVISION

DON & JUDY NELSON

OFF SITE ROAD INPROVEMENTS

ON SITE UTILITY IMPROVEMENTS

SISUL ENGINEERING
375 PORTLAND AVENUE
GLADSTONE, OREGON 97027
(503) 657-0188

DATE	MAY 1996
SCALE	NOTED
DRAWN	KA
JOB	96-29
SHEET	1 OF 4 SHEETS

AS-BUILT

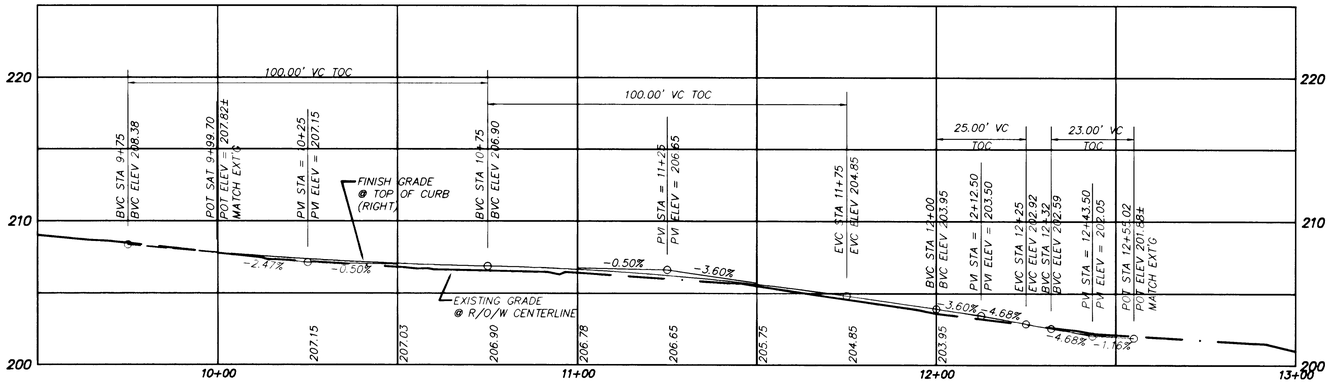

TOP OF CURB (RIGHT) PROFILE – DEBOK ROAD
SCALE HORIZ.: 1" = 20'
VERT: 1" = 5'

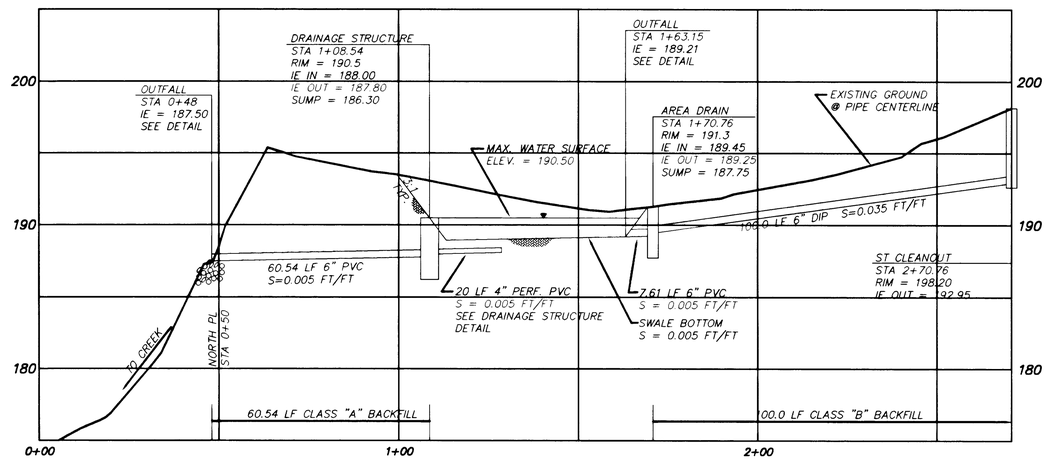

STORM PROFILE
SCALE HORIZ.: 1" = 20'
VERT: 1" = 5'

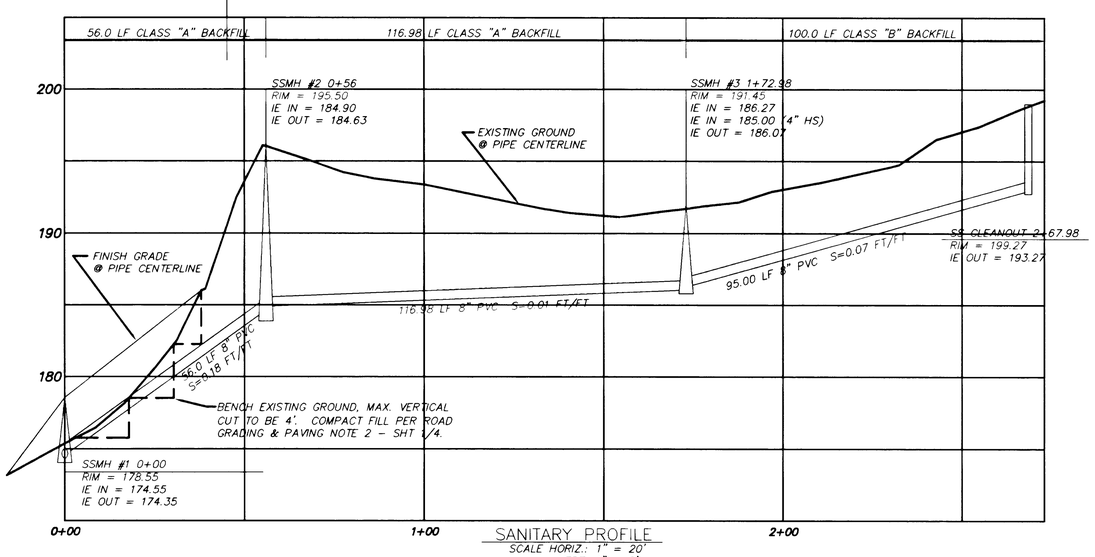

SANITARY PROFILE
SCALE HORIZ.: 1" = 20'
VERT: 1" = 5'

NOTE

DESIGNED BY KAMPE ASSOCIATES
AS – BUILTS BY SISUL ENGINEERING

REGISTERED PROFESSIONAL ENGINEER 12,820 OREGON JULY 14, 1995 THOMAS J. SISUL
7-17-96

REVISIONS	BY
AS-BUILT 7-17-96	LD

NELSON'S ACRE SUBDIVISION

DON & JUDY NELSON

SANITARY PROFILE
STORM PROFILE

SISUL ENGINEERING
375 PORTLAND AVENUE
GLADSTONE, OREGON 97027
(503) 657-0188

DATE	MAY 1996
SCALE	NOTED
DRAWN	KA
JOB	96-29
SHEET	2
OF	4 SHEETS

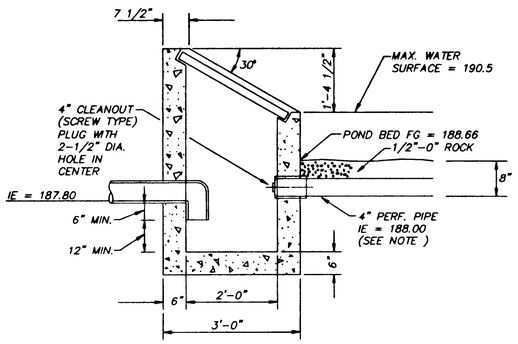

NOTE:
4" PERF. PIPE TO BE INSTALLED IN TRENCH 12" WIDE x 8" DEEP. PIPE TO BE COVERED WITH 1/2"-0" ROCK, 8" MIN. DEPTH. PIPE AND LOWER 4" OF ROCK IN TRENCH TO BE WRAPPED WITH FILTER FABRIC.

DRAINAGE STRUCTURE

N.T.S.

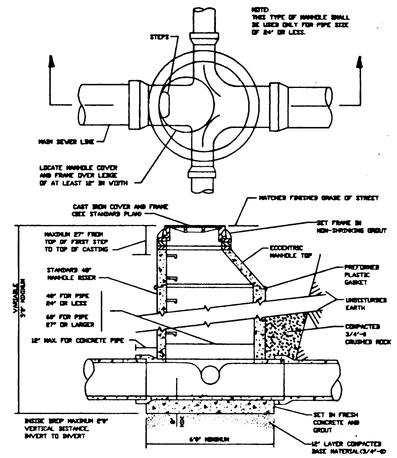

NOTE: MANHOLES ARE TO BE GROUTED INSIDE AND OUTSIDE WITH A CITY APPROVED NON-SHRINK GROUT APPLIED PER THE MANUFACTURER'S SPECIFICATIONS.

MANHOLE SECTION

N.T.S.

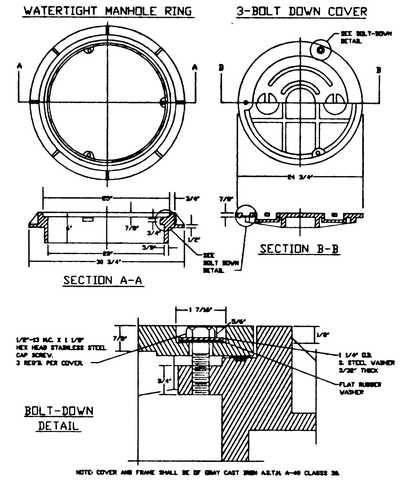

MANHOLE FRAME & COVER

N.T.S.

AS-BUILT

NOTE
DESIGNED BY KAMPE ASSOCIATES AS – BUILTS BY SISUL ENGINEERING

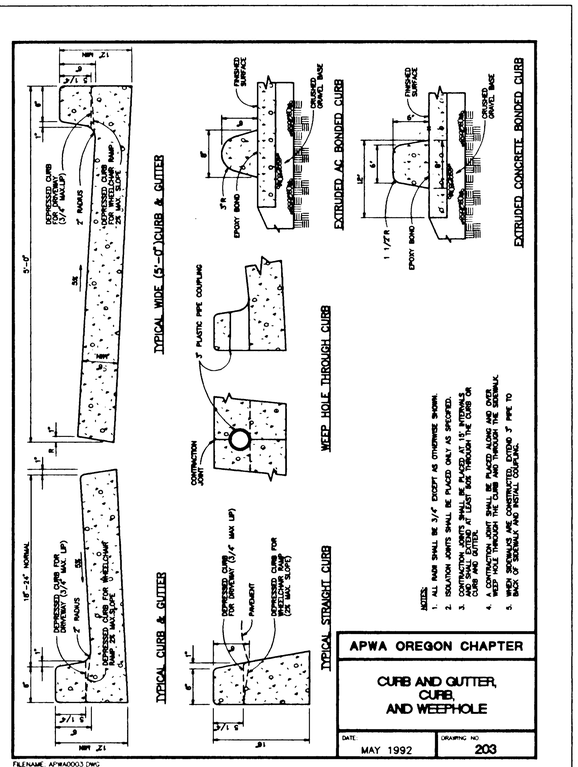

APWA OREGON CHAPTER

CURB AND GUTTER, CURB, AND WEEPHOLE

DATE: MAY 1992 | DRAWING NO: 203

FILENAME: APWA0003.DWG

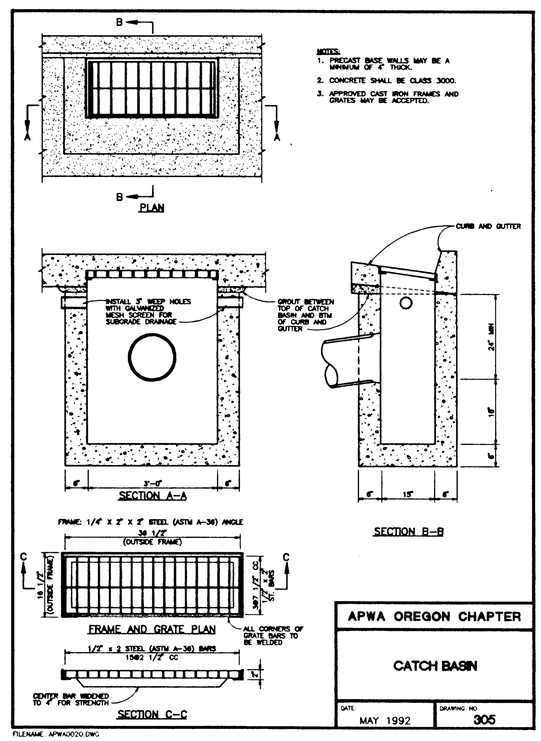

APWA OREGON CHAPTER

CATCH BASIN

DATE: MAY 1992 | DRAWING NO: 305

FILENAME: APWA0020.DWG

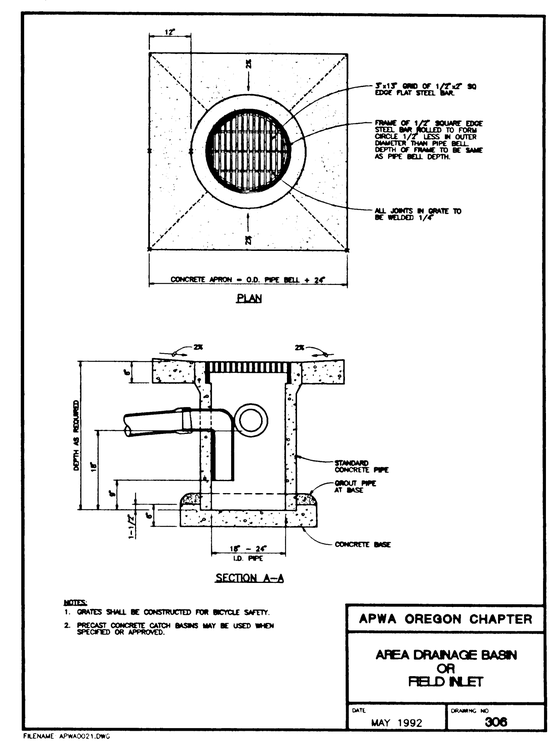

APWA OREGON CHAPTER

AREA DRAINAGE BASIN OR FIELD INLET

DATE: MAY 1992 | DRAWING NO: 306

FILENAME: APWA0021.DWG

PRINTED
MAR 28 1996
KAMPE ASSOC., INC.

NO.	BY	DATE	DESCRIPTION

REVISIONS

Designed JMB
Drawn JMB
Checked SBT
Approved
Date 12/18/95
Scale AS SHOWN

PLANNING CIVIL ENGINEERING LAND SURVEYING
KAMPE ASSOCIATES, P.C.
250 EDGE, P.O. BOX 1135
LAKE OSWEGO, OREGON 97035
(503) 635-8511 FAX: (503) 635-5480

EXPIRES 12/31/96

PREPARED FOR:
DON & JUDY NELSON
18602 MIDHILL DRIVE
WEST LINN, OR 97068
PHONE: (503) 636-2196
FAX:

NELSON'S ACRE SUBDIVISION
DETAILS
WEST LINN, OREGON

3/4 95-105

FILENAME: 951050ET.DWG

FOR CONSTRUCTION

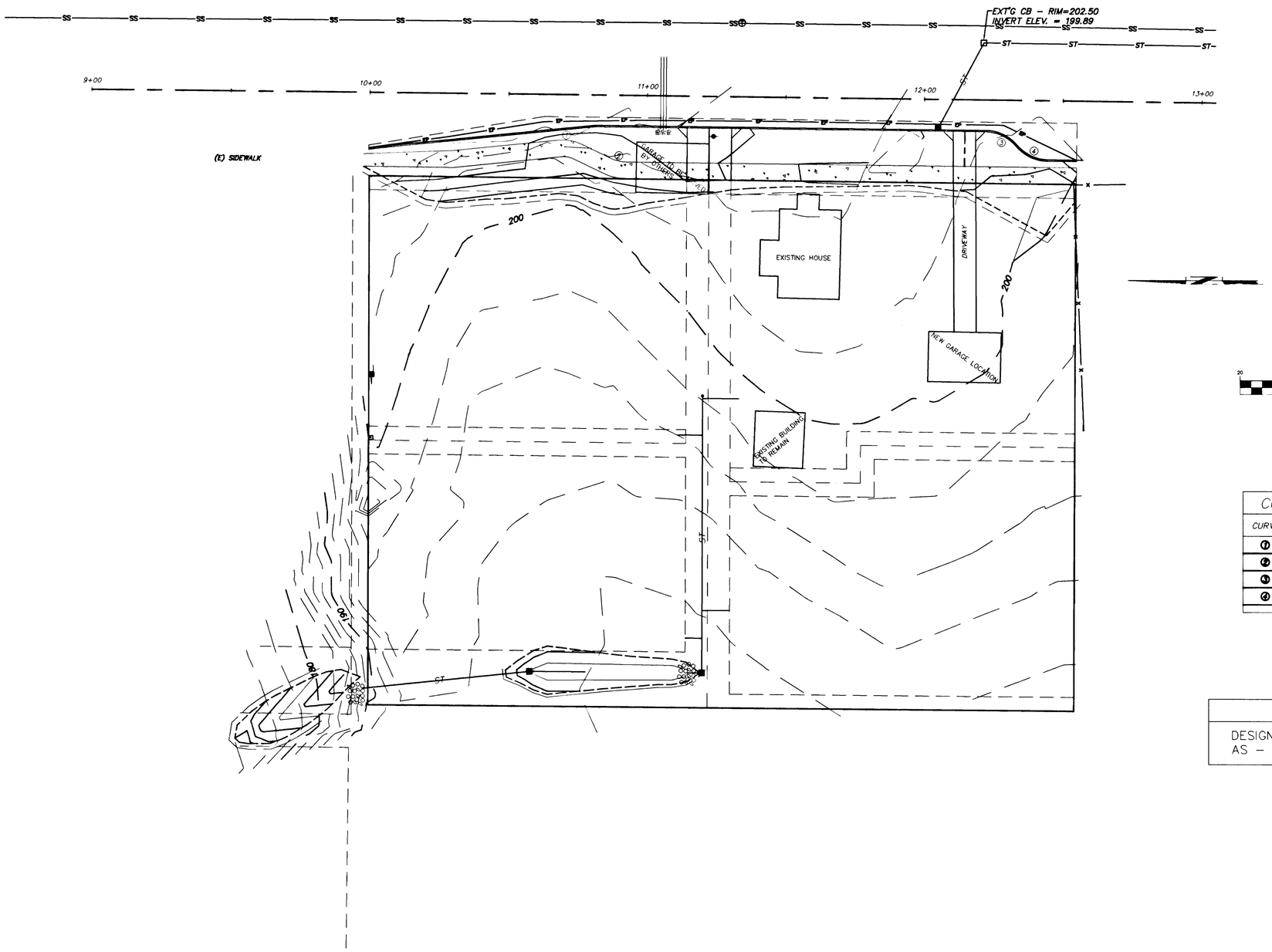

(ALL ITEMS MAY NOT BE USED – EXISTING FEATURES ARE SHADED)

- DENOTES FOUND MONUMENT AS NOTED
- SEWER MANHOLE
- STORM MANHOLE
- CATCH BASIN
- IRRIGATION VALVE
- FIRE HYDRANT
- WATER LINE
- WATER METER
- WATER VALVE
- GAS LINE
- GAS METER
- GAS VALVE
- UNDERGROUND TELEPHONE LINE
- TELEPHONE PEDESTAL
- TELEPHONE VAULT
- FLASHING YELLOW GROUND LIGHT
- SIGNAL CONTROL BOX
- SIGNAL POLE –
- LIGHT POLE
- UNDERGROUND POWER LINE
- OVERHEAD POWER LINE
- POWER PEDESTAL
- UTILITY POLE
- GUY ANCHOR
- WELL
- CONSTRUCTED CLEANOUT
- SEWER LINE
- STORM LINE
- CONSTRUCTED CATCH BASIN
- CONSTRUCTED MANHOLE
- PROPOSED FIRE HYDRANT
- CURB
- RETAINING WALL
- EDGE OF PAVEMENT
- DITCH/CREEK
- PROPERTY LINE
- PROPOSED PROPERTY LINE
- MAILBOX
- FENCE
- CONCRETE
- WALNUT TREE
- FRUIT TREE
- PINE TREE
- BASSWOOD (LINDEN) TREE
- BLACK LOCUST TREE
- HAWTHORNE TREE
- LAUREL HEDGE

GRAPHIC SCALE

20 0 10 20 40 80

(IN FEET)
1 inch = 20 ft.

CURB & SIDEWALK CURVE DATA

CURVE	RADIUS	LENGTH	DELTA	STATION	OFFSET FROM R/O/W CL	TOC/WALK ELEV.
1	15.00'	8.20'	31°19'19"	PT 10+68.28	16.43'	205.48
				PC 10+76.27	17.75'	205.15
2	15.00'	6.54'	25°00'00"	PC 10+86.61	22.50'	204.96
				PT 10+93.00	24.00'	204.90
3	15.00'	12.82'	48°59'02"	PT 12+22.24	11.00'	203.04
				PRC 12+33.56	16.16'	202.52
4	15.00'	12.82'	48°59'02"	PRC 12+33.56	16.16'	202.52
				PT 12+44.88	21.31'	202.11

NOTE

DESIGNED BY KAMPE ASSOCIATES
AS – BUILTS BY SISUL ENGINEERING

AS-BUILT

REGISTERED PROFESSIONAL ENGINEER 12,820 OREGON FEB. 14, 1985 THOMAS J. SISUL
7-17-96

REVISIONS	BY
AS-BUILT 7/17/96	LD

NELSON'S ACRE SUBDIVISION
DON & JUDY NELSON

GRADING AND EROSIN
PLANS, NOTES AND DETAILS

SISUL ENGINEERING
375 PORTLAND AVENUE
GLADSTONE, OREGON 97027
(503) 657-0188

DATE MAY 1996
SCALE NOTED
DRAWN KA
JOB 96-28
SHEET 4 OF 4 SHEETS