INDEX OF SHEETS	
SHEET NO.	DESCRIPTION
1	Title Sheet
2	Typical Sections
2A	Details & Summary
2B	Pipe Data
3	Plan
3A	Construction Notes

REGISTERED PROFESSIONAL ENGINEER 8075 OREGON JULY 22, 1974 WAYNE F. COBINE

STATE OF OREGON

DEPARTMENT OF TRANSPORTATION

STATE HIGHWAY DIVISION

PLANS FOR PROPOSED PROJECT

PRELIMINARY COPY MAR 30 1987 SUBJECT TO CHANGE FINAL DESIGN UNIT

OSWEGO HIGHWAY AT McKILLICAN/HOOD (WEST LINN) SEC. OSWEGO HIGHWAY CLACKAMAS COUNTY				SHEET No. 1
FED. ROAD Div. No.	STATE	PROJECT NUMBER	FISCAL YEAR	TOTAL SHEETS
10	OREGON			See Index

PRELIMINARY COPY MAR 30 1987 SUBJECT TO CHANGE FINAL DESIGN UNIT

OSWEGO HIGHWAY AT McKILLICAN/HOOD (WEST LINN) SEC.

OSWEGO HIGHWAY

CLACKAMAS COUNTY

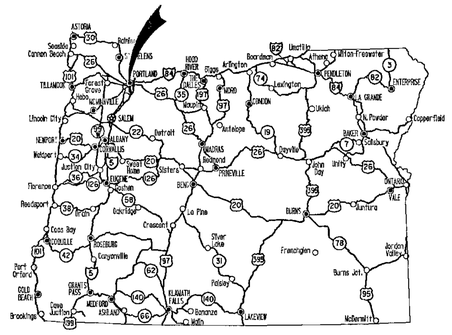

BEGINNING OF PROJECT

STA. 97 + 00 (M.P. 10.80)

END OF PROJECT

STA. 109 + 00 (M.P. 11.03)

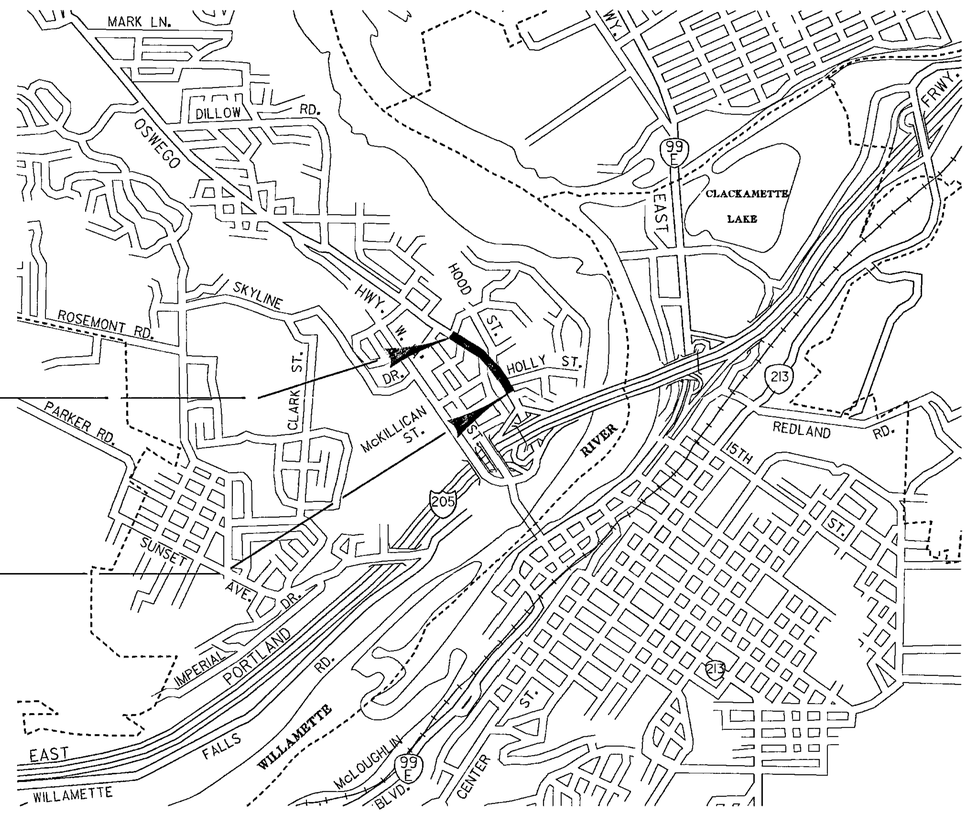

Sketch Map

Scale 0 2500 5000 Feet

N

OREGON TRANSPORTATION COMMISSION

Michael P. Hollern	CHAIRMAN
John Whitty	VICE CHAIRMAN
David F. Bolender	COMMISSIONER
Cynthia J. Ford	COMMISSIONER
Samuel T. Naito	COMMISSIONER
Robert N. Bothman	DIRECTOR OF TRANSPORTATION

REGISTERED PROFESSIONAL ENGINEER 3668 OREGON MAY 7, 1954 L. W. RULLEN

REGISTERED PROFESSIONAL ENGINEER 4552 OREGON MAY 13, 1960 EDGAR S. HUNTER

L. W. Rullen — STATE HIGHWAY ENGINEER

E. S. Hunter — ASSISTANT STATE HIGHWAY ENGINEER

DEPARTMENT OF TRANSPORTATION
FEDERAL HIGHWAY ADMINISTRATION

APPROVED

FIELD OPERATIONS ENGINEER — DATE

ZG2:[100,103]0031947.TS1:1 3-18-87

VIEW=A5

TYPICAL SECTIONS

OSWEGO HIGHWAY AT McKILLICAN/HOOD (WEST LINN) SEC. OSWEGO HIGHWAY CLACKAMAS COUNTY				SHEET No. 2
FED. ROAD DIV. No.	STATE	PROJECT NUMBER	FISCAL YEAR	TOTAL SHEETS
10	OREGON			See Index

PRELIMINARY COPY
MAR 30 1987
SUBJECT TO CHANGE
FINAL DESIGN UNIT

PRELIMINARY COPY
MAR 30 1987
SUBJECT TO CHANGE
FINAL DESIGN UNIT

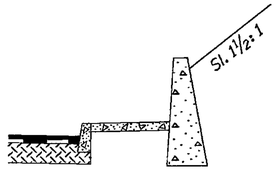

Sta. 105+90 To Sta. 106+65 Rt.

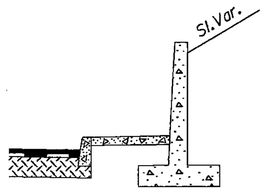

Sta. 99+15 To Sta. 102+77 Rt.

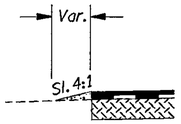

Sta. 97+00 To Sta. 98+24 Lt.

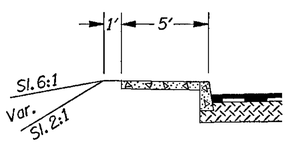

Sta. 104+18 To Sta. 106+94 Lt.

Sta. 97+00 To Sta. 98+51 Rt.

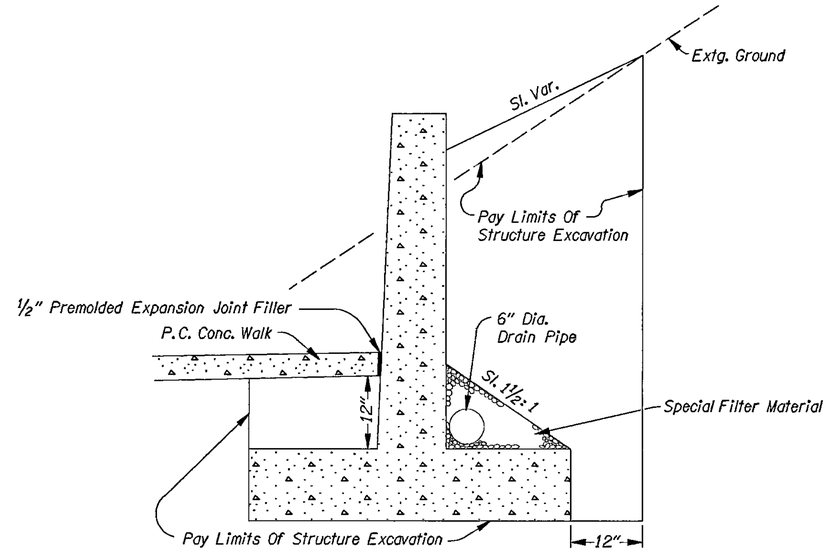

(For Drg. Nos. See Sht. 1)

RETAINING WALL

(Sta. 99+15 To Sta. 102+77)

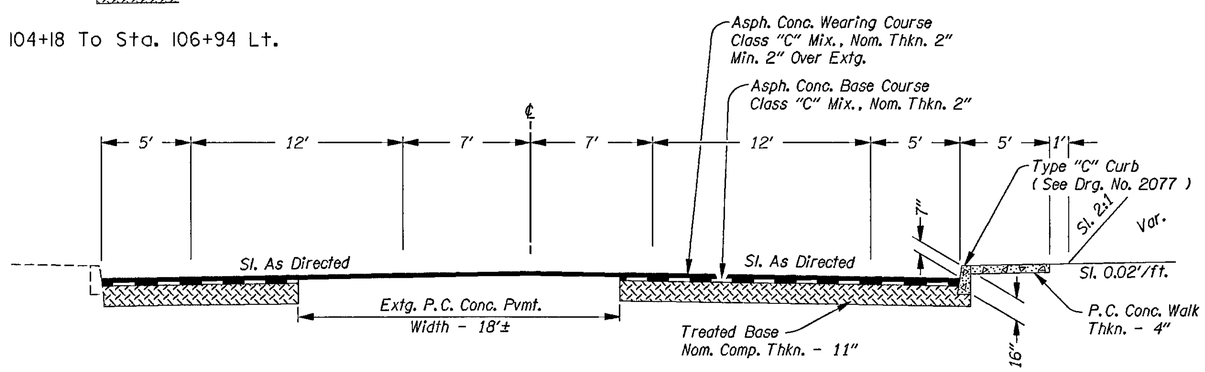

STA. 97+00 To STA. 99+15 (Taper Section)
99+15 To 107+49
107+49 To 109+00 (Taper Section)

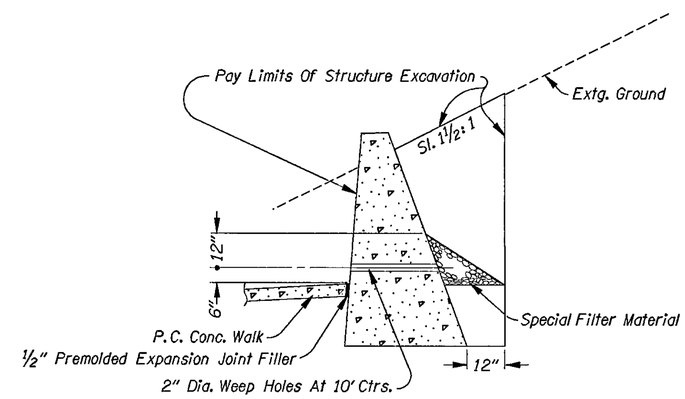

(For Details Not Shown, See Drg. No. 35601)

STANDARD GRAVITY RETAINING WALL

(Sta. 105+90 To Sta. 106+65)

R/W Map: 1A-18-31

2-23-87

Z61:E100.10170031947.TY1:1

Dayton, Swan, Butts

VIEW=GI

S U M M A R Y

ITEM	UNIT	QUANTITY	SEGREGATION OF QUANTITIES	

PRELIMINARY COPY
MAR 30 1987
SUBJECT TO CHANGE
FINAL DESIGN UNIT

D E T A I L S

PRELIMINARY COPY
MAR 30 1987
SUBJECT TO CHANGE
FINAL DESIGN UNIT

OSWEGO HIGHWAY AT McKILLICAN/HOOD (WEST LINN) SEC. OSWEGO HIGHWAY CLACKAMAS COUNTY				SHEET No. 2A
FED. ROAD DIV. No.	STATE	PROJECT NUMBER	FISCAL YEAR	TOTAL SHEETS
10	OREGON			See Index

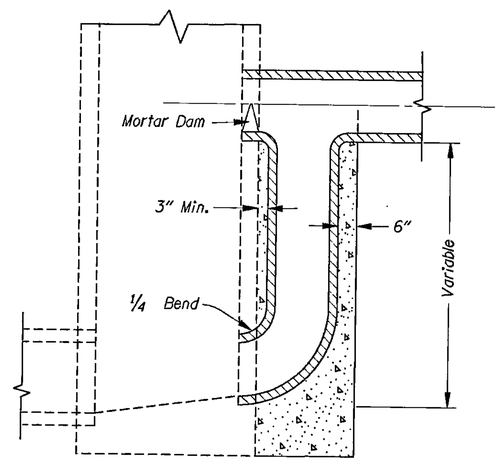

SECTION A - A

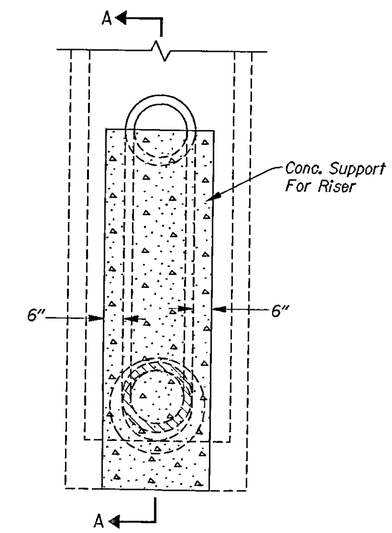

(For Details Not Shown. See Drg. Nos. 2050 & 2050A)

DROP MANHOLE

(For Location, See Plan)

CONSTRUCTION SEQUENCE

STEP 1. Cover Manhole With Building Paper And Const. Overlay Across Extg. Manholes.

STEP 2. Cut Rectangular Excavation Around Manhole 12" Min. From M.H. Frame

STEP 3. Raise M.H. Frame And Install Conc. Rings And Shim To Finish Pvmt. Profile And Cross Slope.

STEP 4. Backfill With Early Strength P.C. Conc. And Asph. Conc. To Depths As Directed

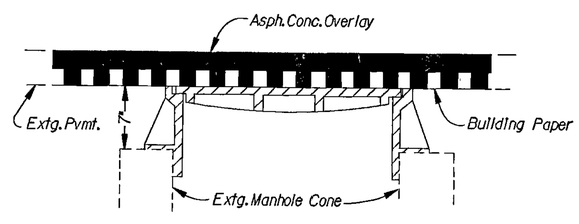

STEP 1

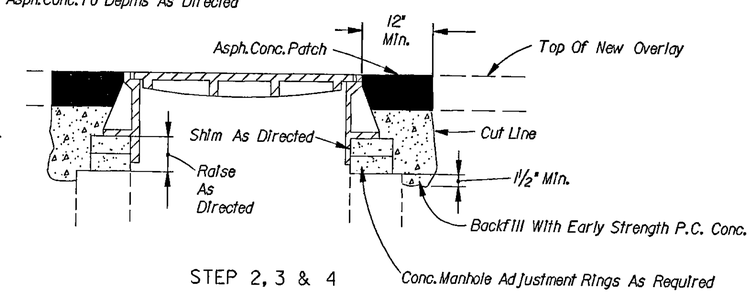

STEP 2, 3 & 4

MANHOLE ADJUSTMENT DETAIL

ZG1:L100.10110031947.SUM:1 1-22-87

VIEW=LI

NEWHALF3

PIPE DATA SHEET

PRELIMINARY COPY
MAR 30 1997
SUBJECT TO CHANGE
FINAL DESIGN UNIT

OSWEGO HIGHWAY AT McKILLICAN/HOOD (WEST LINN) SEC. OSWEGO HIGHWAY CLACKAMAS COUNTY				SHEET No. 2B
FED. ROAD Div. No.	STATE	PROJECT NUMBER	FISCAL YEAR	TOTAL SHEETS
10	OREGON			See Index

GENERAL NOTES:

1. A check (✓) indicates column heading applies.
2. A new pipe culvert installation shall be of like material throughout.
3. Extension of existing metal culverts may be of unlike metal or corrugations. For connecting details, standard drg. 2091-B
4. Dimensions shown are nominal.
5. All pipes shall conform to the AASHTO specification applicable for the type of material and the diameter of the pipe involved.

FOOTNOTES:

(1) Design height of cover shall be measured to subgrade.
(2) Cross-sectional dimensions may vary with different materials. When galvanized iron or steel and aluminum are acceptable alternates use a seperate line for each type of material
(3) Cross-sectional shape of pipe normal to longitudinal axis, prior to loading.
A = Arch Type
R = Round
E = Elliptical (5% nominal elongation)
(4) Minimum allowable diameter for Class I nonreinforced concrete pipe is 15 inches.
(5) Abbreviations for protective coatings for metal pipe
A = Type A asphalt coated
C = Type C asphalt coated with paved invert
D = Type D asphalt coated and fully lined
AP = Asbestos protected
U = Uncoated
CIM = Chevron Industrial membrane
Ep = Epoxy coated
(6) Abbreviations for existing pipe materials
Ab = Asbestos cement
Al = Corrugated aluminum
Co = Concrete
Pl = Plastic
St = Corrugated steel
X = Other material, see remarks column

Drg. Nos.	
☒ 2050	Manholes-Cast-In-Place, Covers
☒ 2050A	Manholes Precast
☐ 2091	Slope Anchors
☐ 2091B	Coupling Band
☒ 2105	Conc. Inlets
☐ 2105A	Conc. Inlets
☐ 2112	Sloped Ends, Metal
☐ 2121	Sloped Ends, Conc./Subgrade Drain
☐ 2123	Paved End Slope
☐ 2132	Slotted Drains

GAGE EQUIVALENCE TABLE

GAGE	GALV. IRON & STEEL (THICKNESS IN INCHES)	ALUMINUM (THICKNESS IN INCHES)
18	0.052	0.048
16	0.064	0.060
14	0.079	0.075
12	0.109	0.105
10	0.138	0.135
8	0.168	0.164

SHEET NUMBER / NOTE No. ON PLANS	DESIGN HEIGHT OF COVER (1) (Feet)	PIPE: CIRCULAR OR ELLIPTICAL: SIZE IN INCHES 6	12	18	24	LENGTH IN FEET	ARCH TYPE: ANNULAR OR HELICAL: SIZE (Inches)	LENGTH (Feet)	STRUCTURAL PLATE: CROSS-SECTIONAL DIMENSIONS (2): SPAN (Feet-Inches)	RISE (Feet-Inches)	CORNER RADII (Inches)	USE / INSTALLATION CRITERIA: DRAIN (PERFORATED)	CULVERT (ROAD APPROACH)	CULVERT (CONDUIT)	CULVERT	IRRIGATION	SIPHON	STORM SEWER	SANITARY SEWER	OTHERS (SEE REMARKS)	WATERTIGHT JOINTS	SLOPE ANCHORS	IMPERFECT TRENCH	PH	RESISTIVITY (HUNDREDS)	TERMINAL TREATMENT: LT/RT	SLOPED ENDS	SKEW NUMBER	PAVED END SLOPES	Not For Conc. Pipe Over 54" Dia.	No.
3																																
	0.7		26															✓			✓											
	0.7		33															✓			✓											
	0.9		33															✓			✓											
	0.9		10															✓			✓											
	0.5		130															✓			✓											
	0.5		125															✓			✓											
	2.0		20															✓			✓											
	1.0			60														✓			✓											
	9.0				12																											
	0.8			16																												
	1.0	417										✓																				

SHEET NUMBER / NOTE No. ON PLANS	ALTERNATE MATERIALS: ANNULAR OR HELICAL CORRUGATED METAL AND STRUCTURAL PLATE: ALUMINUM: SIZE OF CORRUGATIONS: RIVETED, WELDED OR LOCK SEAM: 2 2/3"x1/2" PLATE THKN. (Inches)	CROSS SECTION (3)	3" x 1" PLATE THKN. (Inches)	CROSS SECTION (3)	6" x 1" PLATE THKN. (Inches)	CROSS SECTION (3)	COATING (5)	BOLTED FABRICATION: 9" x 2 1/2" PLATE THKN. (Inches): TOP AND SIDES	BOTTOM	CROSS SECTION (3)	PAVED INVERT	COATING (5)	ALUMINUM COATED OR GALVANIZED IRON AND STEEL: SIZE OF CORRUGATIONS: RIVETED, WELDED OR LOCK SEAM: 2 2/3"x1/2" PLATE THKN. (Inches)	CROSS SECTION (3)	3" x 1" PLATE THKN. (Inches)	CROSS SECTION (3)	125mm x 25mm PLATE THKN. (Inches)	CROSS SECTION (3)	COATING: GALVANIZED (5)	ALUMINUM (5)	BOLTED FABRICATION: 6" X 2" PLATE THKN. (Inches): TOP AND SIDES	BOTTOM	CROSS SECTION (3)	PAVED INVERT	COATING (5)	RIGID: PRE-CAST CONCRETE: PLAIN (4): 1	2	3	REINF.: III	IV	V	CAST-IN-PLACE CONCRETE	CORRUGATED POLYETHYLENE
3																																
																															✓					
																															✓					
																															✓					
																															✓					
																															✓					
																															✓					
																															✓					
																															✓					
																															✓					
																															✓					
																															✓					✓

SHEET NUMBER / NOTE No. ON PLANS	APPURTENANCES: MANHOLES: DEPTH TOP OF COVER TO INVERT (Feet)	DIAMETER OF LARGEST PIPE IN BASE (In.)	CONC.: PRECAST	CAST-IN-PLACE	DROP MANHOLE	WITH CRATE	SPECIAL	INLETS: TYPE: G-1	CG-1	G-2MA	Number Required	EXTENSION: LEFT (Feet)	RIGHT (Feet)	EXTG. PIPE MATERIAL (6)	REMARKS
3															
								1							
									1						
									1						
									1						
									1						
										1					
	18.5	24		1											
												12		Co	
	8	18		1				1							

3-30-87

ZG1:L100.101T0031947.PN1:1

PRELIMINARY COPY
MAR 30 1997
SUBJECT TO CHANGE
FINAL DESIGN UNIT

VIEW=JI

OSWEGO HIGHWAY AT McKILLICAN/HOOD (WEST LINN) SEC. OSWEGO HIGHWAY CLACKAMAS COUNTY				SHEET No. 3
FED. ROAD Div. No.	STATE	PROJECT NUMBER	FISCAL YEAR	TOTAL SHEETS
10	OREGON			See Index

PRELIMINARY COPY
MAR 30 1997
SUBJECT TO CHANGE
FINAL DESIGN UNIT

PRELIMINARY COPY
MAR 30 1997
SUBJECT TO CHANGE
FINAL DESIGN UNIT

Sec. 30, T. 2S., R. 2E., W. M.

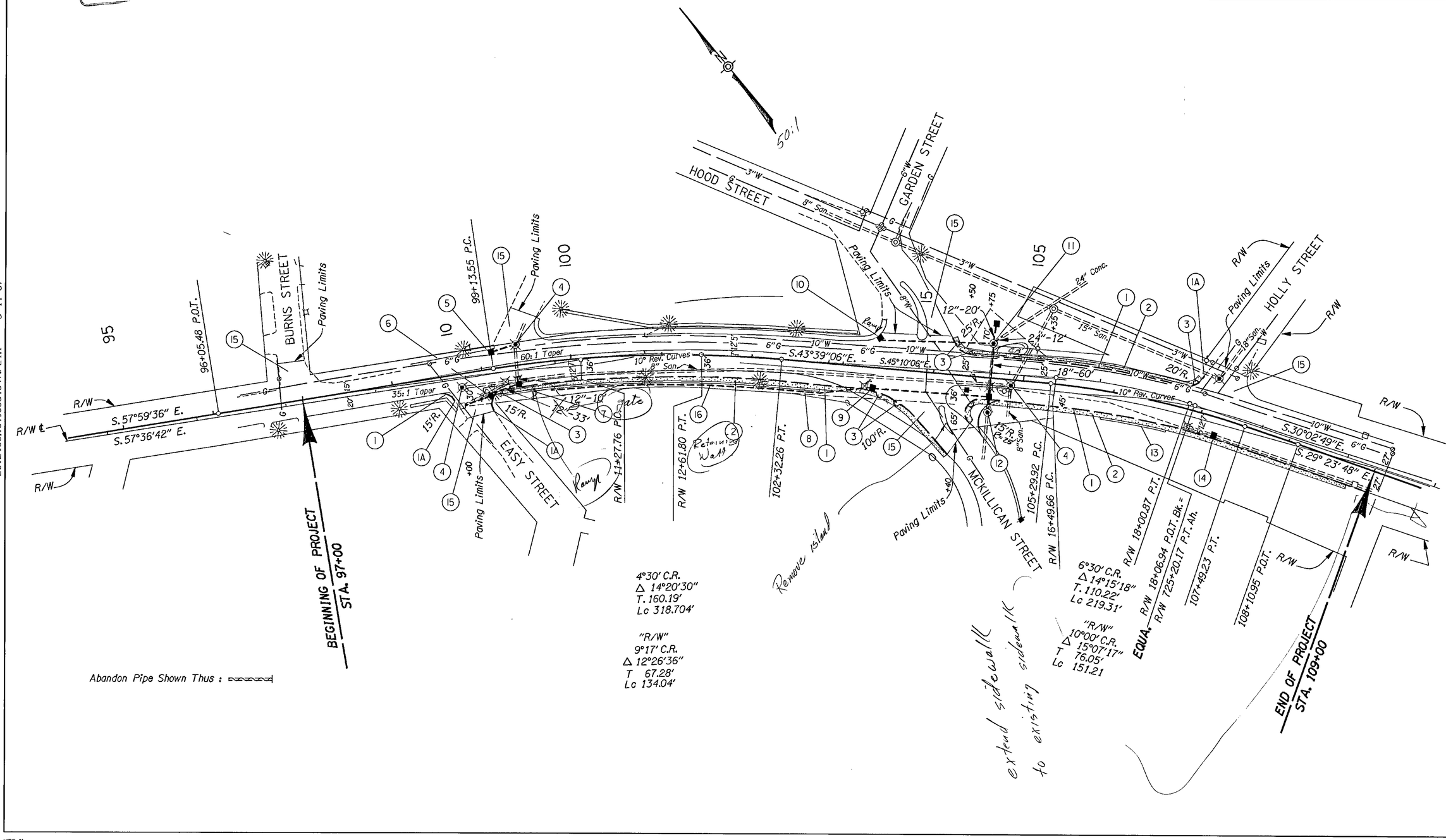

Z61:L100.1011003 1947.PL 1:1 3-11-87

VIEW=C1

PRELIMINARY COPY
MAR 30 1987
SUBJECT TO CHANGE
FINAL DESIGN UNIT

SHEET No. 3A

PRELIMINARY COPY
MAR 30 1987
SUBJECT TO CHANGE
FINAL DESIGN UNIT

OSWEGO HIGHWAY AT McKILLICAN/HOOD (WEST LINN) SEC. OSWEGO HIGHWAY CLACKAMAS COUNTY				SHEET No. 3A
FED. ROAD Div. No.	STATE	PROJECT NUMBER	FISCAL YEAR	TOTAL SHEETS
10	OREGON			See Index

PRINTING INSTRUCTIONS TO PAGE SHEET 3

(1) (1A) *Const. Type "C" Curb*
Const. Curb Ending
(Drg. No. 2077)

(2) *Const. P.C. Conc. Walk*

(3) *Const. Sidewalk Ramp - 8*
(Drg. No. 2077B)

(4) *Adjust Manhole*
(For Details, See Sht. 2A)

(5) *Const. Type "G-1" Inlet*
Inst. 12" Sew. Pipe - 26'
Under Pvmt. - 26'
Tr. Exc. - 9 C.Y.

(6) *Const. Type "CG-1" Inlet*
Inst. 12" Sew. Pipe - 33'
Under Pvmt. - 26'
Tr. Exc. - 11 C.Y.

(7) *Const. Type "CG-1" Inlet*
Inst. 12" Sew. Pipe - 43'
Tr. Exc. - 14 C.Y.

(8) *Sta. 99+15 To Sta. 102+77*
Const. Retaining Wall
(For Drg. Nos., See Sht. 1)

(9) *Const. Type "CG-1" Inlet*
Inst. 12" Sew. Pipe - 130'
Under Pvmt. - 82'
Tr. Exc. - 49 C.Y.

(10) *Const. Type "CG-1" Inlet*
Inst. 12" Sew. Pipe - 125'
Under Pvmt. - 80'
Tr. Exc. - 76 C.Y.

(11) *Const. Drop Manhole*
Const. Type "G-2MA" Inlet
Inst. 12" Sew. Pipe - 20'
Inst. 18" Sew. Pipe - 60'
24" Conc Pipe (In Place)
Extend - 12'
Under Pvmt. - 38'
Tr. Exc. - 57 C.Y.

(12) *Const. Drop Manhole*
Const. Type "CG-1" Inlet
Inst. 18" Sew. Pipe - 16'
Tr. Exc. - 10 C.Y.

(13) *Sta. 105+90 To Sta. 106+65*
Const. Retaining Wall
(For Details, See Sht. 2)

(14) *Const. Type "CG-1" Inlet*
(Connect To Extg. 12" Sew. Pipe)

(15) *Const. Street Connection - 6*

(16) *Inst. 6" Drain Pipe - 417'*
Special Filter Material - 32 C.Y.
Tr. Exc. - 11 C.Y.

ZG1:F100.10110031947.PL1:1 1-21-87

VIEW=C2

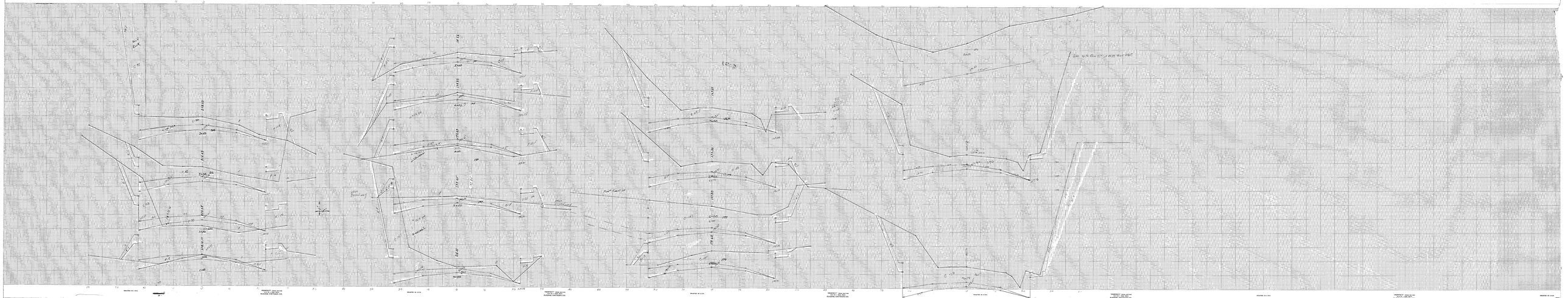
PROPERTY LINE SHOWN
SCALE 1" = 100' DATE
PACIFIC GAS & ELECTRIC CO.
DRAWN BY C.A.S.
PROPERTY LINE SHOWN
SCALE 1" = 100' DATE
PACIFIC GAS & ELECTRIC CO.
DRAWN BY C.A.S.
PROPERTY LINE SHOWN
SCALE 1" = 100' DATE
PACIFIC GAS & ELECTRIC CO.
DRAWN BY C.A.S.
PROPERTY LINE SHOWN
SCALE 1" = 100' DATE
PACIFIC GAS & ELECTRIC CO.
DRAWN BY C.A.S.
PROPERTY LINE SHOWN
SCALE 1" = 100' DATE
PACIFIC GAS & ELECTRIC CO.
DRAWN BY C.A.S.