MAXFIELD SUBDIVISION
WEST LINN, OREGON

These As Built Plans were compiled from changes to permitted plans as denoted by contractor and periodic observation during construction. It is suggested that these plans be used in conjunction with field verification of location and elevations of improvements in question. These plans are an accurate record of site improvements to the best of my information, knowledge and belief.

Signature: [signature] Date: 01/11/2007

GENERAL NOTES

1. ALL CONSTRUCTION SHALL BE IN ACCORDANCE WITH THE "CITY OF WEST LINN STREET/UTILITY DESIGN AND CONSTRUCTION STANDARDS", DATED MAY 2005 AND OAR'S CHAPTER 333. ALL STREET, STORM SEWER AND SANITARY SEWER CONSTRUCTION THAT IS NOT ADDRESSED IN THE CITY'S STANDARDS SHALL BE IN ACCORDANCE WITH APWA STANDARDS. ALL WATER SYSTEM CONSTRUCTION THAT IS NOT ADDRESSED IN THE CITY'S STANDARDS SHALL BE IN ACCORDANCE WITH AWWA STANDARDS. CONTRACTOR TO OBTAIN A COPY OF THE GEOTECHNICAL REPORT PREPARED FOR THIS PROJECT PRIOR TO CONSTRUCTION.
2. PRIOR TO ANY CONSTRUCTION, LOCATIONS OF EXISTING UTILITIES SHALL BE VERIFIED BY THE CONTRACTOR. WHEN ACTUAL CONDITIONS DIFFER FROM THOSE SHOWN ON THE PLANS, THE CONTRACTOR SHALL NOTIFY THE ENGINEER PRIOR TO PROCEEDING WITH CONSTRUCTION.
3. ORGANIC AND NON-DESIRABLE MATERIALS SHALL BE REMOVED FROM THE CONSTRUCTION AREA AS DIRECTED BY THE GEOTECHNICAL ENGINEER.
4. ALL FILL AREAS SHALL BE STRIPPED OF ORGANIC MATERIAL. FILL WILL BE PLACED IN 6-INCH LAYERS AND COMPACTED TO 95 PERCENT RELATIVE MAXIMUM DENSITY ACCORDING TO AASHTO T-180 STANDARDS. LANDSCAPE AREAS SHALL BE COMPACTED TO 90 PERCENT. THE CONTRACTOR SHALL PROVIDE COMPACTION TESTING, ONE FOR EVERY 10,000 SQUARE FEET OF AREA AND FOR EVERY 2 LAYERS OR 16" AND EVERY 100 LINEAR FEET OF FILL PLACED. COMPACTION REPORTS FROM A NATIONALLY ACCREDITED TESTING LAB SHALL BE SUPPLIED TO THE ENGINEER. A COPY OF THE REPORTS SHALL BE GIVEN TO THE CITY.
5. CONTRACTOR SHALL LEAVE ALL AREAS OF THE PROJECT FREE OF DEBRIS AND UNUSED CONSTRUCTION MATERIALS.
   a. AREAS TO BE LANDSCAPED SHALL BE SMOOTHED AND LEFT TO THE GRADES INDICATED ON THE GRADING PLAN, PLUS OR MINUS 0.1 FOOT.
   b. ALL DISTURBED AREAS NOT TO BE LANDSCAPED SHALL BE SEEDED PER EROSION CONTROL NOTES ON APPROVED GRADING PERMIT SET.
   c. ALL EXCESS/EXTRA MATERIAL SHALL BE REMOVED FROM THE SITE.
6. ANY CHANGES FROM THE APPROVED PLANS SHALL BE REQUESTED BY THE CONTRACTOR IN WRITING. THE DESIGN ENGINEER AND THE CITY OF WEST LINN'S PROJECT ENGINEER MUST APPROVE THE CHANGE PRIOR TO ITS IMPLEMENTATION. COMPLEXITY OF MODIFICATION WILL DETERMINE IF REVISED PLANS ARE REQUIRED.
7. CITY OF WEST LINN DETAILS SHALL BE USED AT LOCATIONS AS SPECIFIED IN THE PLANS, SEE DETAIL SHEETS.
8. DURING CONSTRUCTION, ALL EROSION CONTROL MEASURES SHALL CONFORM TO CLACKAMAS COUNTY EROSION CONTROL STANDARDS.
9. IN CASE OF A DISCREPANCY BETWEEN THE DRAWINGS AND THE FIGURES WRITTEN THEREON, THE FIGURES SHALL BE DEEMED TO GOVERN.
10. THE OWNER WILL SUPPLY ONE SET OF STAKES FOR EACH CONSTRUCTION OPERATION AS DESCRIBED IN THE CONTRACT DOCUMENTS AND SPECIFICATIONS. THE CONTRACTOR SHALL DESIGNATE A REPRESENTATIVE OR REPRESENTATIVES WHO ARE AUTHORIZED TO REQUEST STAKES. STAKING REQUESTS FROM AUTHORIZED REPRESENTATIVE SHALL BE MADE TO DAVE LIDEN AT OTAK (503-699-2401) AT LEAST 48 HOURS IN ADVANCE OF THE NEED FOR SAID STAKES. ONLY REQUESTS FROM AUTHORIZED REPRESENTATIVES WILL BE HONORED. ANY RESTAKING WILL BE DONE AT THE EXPENSE OF THE CONTRACTOR.
11. WEEK DAY WORK HOURS ARE 7 AM TO 7 PM; SATURDAY WORK HOURS ARE 9 AM TO 5 PM, AND NO WORK ON SUNDAYS OR HOLIDAYS
12. THE CITY OF WEST LINN SHALL BE PRESENT WHEN TESTING IS PERFORMED AND SUPPLIED WITH A COPY OF TEST RESULTS. ALL FACILITIES WILL BE ACCEPTED BY THE CITY PRIOR TO CONNECTION TO EXISTING SYSTEMS.
13. ALL FEES FOR STREET TREES SHALL BE PAID TO THE CITY OF WEST LINN PARKS AND RECREATION DEPT.
14. NO BUILDING PERMITS SHALL BE ISSUED UNTIL ALL IMPROVEMENTS HAVE BEEN COMPLETED AND ACCEPTED
15. THE CONTRACTOR SHALL REMOVE ALL SOFT OR OTHERWISE UNSUITABLE MATERIAL AT SUBGRADE AND REPLACE WITH APPROVED MATERIAL AT THE DIRECTION OF THE PROJECT GEOTECHNICAL ENGINEER. THE CONTRACTOR SHALL COMPACT TO A LINE ONE FOOT BEHIND BACK OF CURB.
    EXPANSIVE SOILS OCCUR AT SHALLOW DEPTHS IN THE LOWER ELEVATIONS (SOUTHERN SECTION) OF THE SITE. EXPANSIVE CLAY SHOULD NOT BE PRESENT WITHIN TO VERTICAL FEET FROM THE BOTTOM OF FOUNDATIONS. A MINIMUM OF 4 FEET OF ENGINEERED FILL SHOULD BE PLANNED OVERLYING AREAS OF EXPANSIVE CLAY OR THE CLAY SHOULD BE COMPLETELY REMOVED AND REPLACED WITH ENGINEERED FILL. CONTACT THE GEOTECHNICAL ENGINEER FOR MORE DETAILS.
16. FINAL SUBGRADE PROOF-ROLL WITH 10 CY TRUCK LOADED WITH ROCK IS REQUIRED PRIOR TO PLACING AGGREGATE BASE.
17. FINAL BASE ROCK PROOF ROLL WITH 10 CY TRUCK LOADED WITH ROCK IS REQUIRED PRIOR TO PAVING. BASE ROCK TO BE COMPACTED TO 95 PERCENT RELATIVE MAXIMUM DENSITY ACCORDING TO AASHTO T-180 STANDARDS.
18. PLEASE NOTE CITY OF WEST LINN STANDARD CONSTRUCTION SPECIFICATION SECTION 505.03.11 FOR WEATHER RELATED LIMITATIONS ON THE PLACEMENT OF ASPHALTIC CONCRETE.
19. THE DENSITY OF THE COMPACTED BASE LIFT OF AC SHALL BE AT LEAST 92% OF RICE IN CONFORMANCE WITH AASHTO T209 AS MODIFIED BY THE OREGON STATE HIGHWAY DEPARTMENT.
20. THE DENSITY OF THE COMPACTED TOP LIFT OF AC SHALL BE AT LEAST 92% OF RICE IN CONFORMANCE WITH AASHTO T209 AS MODIFIED BY THE OREGON STATE HIGHWAY DEPARTMENT.
21. DENSITY TESTS WILL BE REQUIRED FOR TRENCH BACKFILL AND ALPHALT, PER THE CITY OF WEST LINN STANDARD CONSTRUCTION SPECIFICATIONS. COPIES OF ALL REPORTS ARE TO BE SUPPLIED TO THE CITY INSPECTOR AND DESIGN ENGINEER.
22. CONTRACTOR SHALL SUBMIT SCHEDULE DETAILING SEQUENCE OF CONSTRUCTION PRIOR TO THE PRE-CONSTRUCTION MEETING.
23. THE STRENGTH OF CONCRETE USED FOR CURBS, GUTTERS AND SIDEWALKS SHALL BE 3300 psi.

BENCHMARK

City of West Linn Bench Mark "B" is 93.5' east and 17.0' south of the edge of pavement from 4-way intesection of Rosemont/Santa Anita. 3" cap on pipe with yellow water works lid elev = 667.22

LOCATING EXISTING UTILITIES

--- 48 HOUR NOTICE REQUIRED PRIOR TO EXCAVATION ---

ONE CALL SYSTEM (GENERAL TELEPHONE, NORTHWEST NATURAL GAS, U.S. WEST, U.S. SPRINT)	(503) 246-6699
PORTLAND GENERAL ELECTRIC	(503) 643-5454, EXT. 312, 313, 314
TCI CABLE TELEVISION	243-7491
REPAIR EMERGENCIES	
NORTHWEST NATURAL GAS	(503) 226-4211, EXT. 4413
CITY OF WEST LINN WATER OPERATIONS SANITARY SEWER OPERATIONS	(503) 656-3535

THE CONTRACTOR, IN LOCATING AND PROTECTING UNDERGROUND UTILITIES, MUST COMPLY WITH THE REGULATIONS OF O.R.S. 757.541 TO 757.571

ATTENTION EXCAVATORS: Oregon law requires you to follow rules adopted by the Oregon Utility Notification Center. Those rules are set forth in OAR 952-001-0010 through OAR 952-001-0090. You may obtain copies of these rules from the Center by calling (503) 232-1987. If you have any questions about the rules, you may contact the call Center. YOU MUST NOTIFY THE CENTER AT LEAST 2 BUSINESS DAYS, BUT NOT MORE THAN 10 BUSINESS DAYS, BEFORE COMMENCING AN EXCAVATION. CALL (503) 246-6699.

LKO: LISAB 01/11/2007 11:42am --> R:\DWG\D227C0.0.DWG

STORM AND SANITARY SEWER NOTES

U1. MANHOLE CONSTRUCTION SHALL BE IN ACCORDANCE WITH THE CITY OF WEST LINN'S PUBLIC WORKS STANDARDS. MANHOLES SHALL CONFORM TO ASTM C-478.

U2. TRENCH BEDDING, PIPE ZONE AND BACKFILL IN PAVED AREAS WILL BE 3/4-INCH MINUS CRUSHED AGGREGATE COMPACTED TO 95 PERCENT RELATIVE MAXIMUM DENSITY, AASHTO T-180.
UNPAVED AREAS OUTSIDE ROW TO BE CLASS A NATIVE BACKFILL MATERIAL EXCEPT BEDDING AND PIPE ZONE MATERIAL (SEE WEST LINN DETAIL WL-200 ON SHEET C6.1) UNLESS OTHERWISE NOTED. CLASS A NATIVE BACKFILL TO BE COMPACTED TO A MINIMUM OF 95 PERCENT OF THE MAXIMUM DRY DENSITY, AASHTO T-180.

U3. ALL PUBLIC STORM DRAINS SHALL BE CONSTRUCTED WITH PVC ASTM F794 (ULTRA-RIB OR EQUAL), EXCEPT CULVERTS AS SPECIFIED.

U4. ALL PUBLIC SANITARY SEWERS SHALL BE CONSTRUCTED WITH PVC D3034 PIPE. PRIOR TO ACCEPTANCE, ALL PUBLIC SANITARY SEWERS SHALL BE TV, PRESSURE, AND DEFLECTION TESTED IN ACCORDANCE WITH THE CITY OF WEST LINN'S REQUIREMENTS.

U5. ALL PUBLIC STORM SEWERS SHALL BE TV AND DEFLECTION TESTED.

U6. WATER TIGHT PLUGS SHALL BE INSTALLED IN THE ENDS OF SANITARY AND STORM LATERALS AND A 2" X 4" WOOD MARKER PLACED AT THE LATERAL END FROM PIPE INVERT TO AT LEAST 36" ABOVE THE FINISH GRADE. THE 2" X 4" TOP SHALL BE PAINTED (GREEN FOR SANITARY) AND (WHITE FOR STORM) AND MARKED WITH THE DEPTH OF THE LATERAL MEASURED FROM THE FINISHED GROUND ELEVATION TO THE INVERT OF PIPE AT THE TIME THE CURBS ARE POURED, AN (S FOR SANITARY) AND (SD FOR STORM) SHALL BE STAMPED IN THE TOP OF THE CURB AT EACH POINT A LATERAL CROSSES BENEATH THE CURB LINE.

U7. ALL SANITARY SEWER MANHOLES SHALL BE VACUUM TESTED.

U8. CONSTRUCTION NOTES FOR STORM AND SANITARY SEWERS ARE ON SHEET C4.0 AND C3.0 RESPECTIVELY.
PRIOR TO MAKING THE CONNECTION TO THE EXISTING SYSTEMS, THE SANITARY SEWER AND STORM SEWER SHALL BE ACCEPTED BY THE CITY.

WATER NOTES

W1. ALL WATER PIPE AND FITTINGS SHALL BE DUCTILE IRON CLASS 52 AND CONFORM TO STANDARD CITY SPECIFICATIONS AND DETAILS. ALL WATER SERVICE LINES TO BE TYPE K COPPER PIPE PER CITY OF WEST LINN SPECIFICATIONS.

W2. WATERLINES SHALL BE PRESSURE TESTED FOLLOWING COMPLETION. PRESSURE TESTS SHALL BE IN ACCORDANCE TO THE CITY OF WEST LINN'S STANDARDS WITH A MINIMUM TEST PRESSURE OF 180 PSI. WHEN THE PRESSURE TEST IS PERFORMED, THE TEST PRESSURE OF 180 PSI SHALL STABILIZE BEFORE THE TEST BEGINS. SERVICE LINES WILL ALSO BE TESTED TO THE METER LOCATION . THE DURATION OF THE PRESSURE TEST SHALL BE 1 HOUR. ZERO PRESSURE LOSS IS REQUIRED FOR A SUCCESSFUL TEST.

W3. PRIOR TO BEING PLACED INTO SERVICE, THE WATERLINE SHALL BE FLUSHED, STERILIZED AND FLUSHED AGAIN ALL IN ACCORDANCE WITH STANDARD METHODS OF THE HEALTH DIVISION, DEPARTMENT OF HUMAN RESOURCES, STATE OF OREGON.

W4. PRIOR TO CONNECTION TO EXISTING WATERLINE, A SAMPLE SHALL BE TAKEN AND TESTED FOR BACTERIOLOGICAL QUALITY. RESULTS MUST BE WITHIN STANDARDS OF THE STATE OF OREGON.

W5. CONCRETE THRUST BLOCKING SHALL BE PROVIDED AT ALL WATERLINE FITTINGS AS REQUIRED BY CITY STANDARDS. BLOCKING SHALL BE 3000 PSI CONCRETE PLACED AGAINST UNDISTURBED EARTH AND CLEAR OF JOINT ACCESSORIES. BEARING AREA OF THRUST BLOCK SHALL BE COMPUTED ON THE BASIS OF ALLOWABLE SOIL BEARING PRESSURE. ALL PIPE FITTINGS IN CONTACT WITH CONCRETE SHALL BE WRAPPED IN PLASTIC.

W6. MINIMUM COVER OVER WATERLINES IS TO BE 36" AS MEASURED FROM FINISH GRADE TO TOP OF PIPE. MINIMUM VERTICAL SEPARATION BETWEEN WATERLINE AND SANITARY SEWER AT A CROSSING IS 18". SANITARY SEWER AT WATERLINE CROSSINGS WITH LESS THAN THE MINIMUM VERTICAL SEPARATION SHALL BE CONSTRUCTED OF DUCTILE IRON PIPE WITH WATERTIGHT JOINTS. IN SUCH CASES THE 18-FOOT LENGTH OF SANITARY SEWER SHALL BE CENTERED AT THE CROSSING.

W7. ALL WATER SERVICES SHALL BE SEPARATED BY A MINIMUM HORIZONTAL DISTANCE OF 2' AT THE MAINLINE.

W8. FIRE HYDRANT ASSEMBLIES TO BE MUELLER CENTURION A-423 OR CLOW MEDALLION F-2545 AND ARE TO BE INSTALLED PER CITY OF WEST LINN STANDARD SPECIFICATIONS AND DETAILS

W9. TRENCH BEDDING, PIPE ZONE AND BACKFILL IN PAVED AREAS WILL BE 3/4-INCH MINUS CRUSHED AGGREGATE COMPACTED TO 95 PERCENT RELATIVE MAXIMUM DENSITY, AASHTO T-180. UNPAVED AREAS OUTSIDE ROW TO BE CLASS A NATIVE BACKFILL MATERIAL EXCEPT BEDDING AND PIPE ZONE MATERIAL (SEE WEST LINN DETAIL WL-200 ON SHEET C8.1) UNLESS OTHERWISE NOTED. CLASS A NATIVE BACKFILL TO BE COMPACTED TO A MINIMUM OF 95 PERCENT OF THE MAXIMUM DRY DENSITY, AASHTO T-180.

W10. GATE VALVES SHALL BE RESILIENT SEAL, NOT RISING STEM WITH "O" RING PACKING, COMPLYING WITH AWWA CLASS "C" SPECIFICATIONS. THE VALVES SHALL BE DESIGNED TO WITHSTAND A WORKING PRESSURE OF 150 PSI. BUTTERFLY VALVES SHALL BE RUBBER SEAL TYPE AND BUBBLE-TIGHT AT 150 PSI, AND SHALL CONFORM TO AWWA C504. VALVE BOXES SHALL BE "VANCOUVER" PATTERN.

W11. ALL WATER LINE PRESSURE AND CHLORINATION TESTING SHALL BE PERFORMED WITH THE CITY PRESENT.

W12. CONSTRUCTION NOTES FOR WATERLINE ARE ON SHEET C5.0.

VICINITY MAP

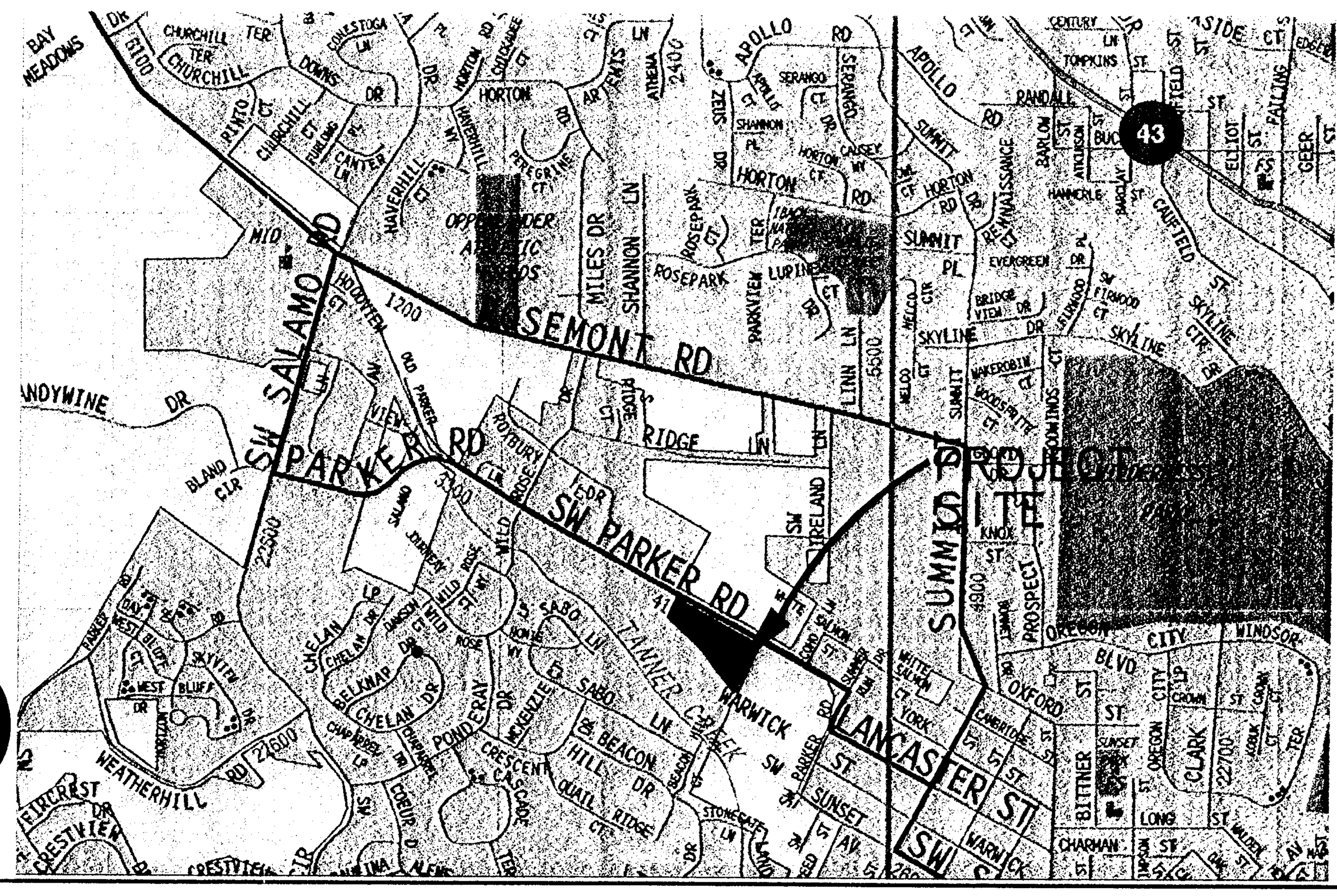

N.T.S.

SHEET INDEX

C0.0 COVER SHEET, PROJECT MAP, VICINITY MAP, PROJECT TEAM
C1.0 CONDITIONS OF APPROVAL & STREET CROSS SECTIONS
C1.1 EXISTING CONDITIONS
C1.2 SITE PLAN
C1.3 COMPOSITE GRADING PLAN
C1.4 COMPOSITE UTILITY PLAN
C2.0 STREET PLAN
C2.1 STREET PROFILE - WINKEL WAY
C2.2 STREET PROFILE - DAMON DRIVE, MAXFIELD DRIVE, TRACTS D & E
C3.0 SANITARY SEWER PLAN
C3.1 SANITARY SEWER PROFILE - WINKEL WAY
C3.2 SANITARY SEWER PROFILE - DAMON DRIVE, MAXFIELD DRIVE, TRACTS D & E, OFFSITE
C4.0 STORM DRAIN PLAN
C4.1 STORM DRAIN PROFILE - WINKEL WAY
C4.2 STORM DRAIN PROFILE - DAMON DRIVE, MAXFIELD DRIVE, TRACTS D & E, OFFSITE
C4.3 STORM WATER DETENTION FACILITY POND 1
C4.4 STORM WATER DETENTION FACILITY POND 2
C5.0 WATER PLAN
C5.1 WATER PROFILE - WINKEL WAY
C5.2 WATER PROFILE - DAMON DRIVE, MAXFIELD DRIVE
C6.0 STREET AND STORM DETAILS
C6.1 STORM AND SANITARY DETAILS
C6.2 STORM DRAIN DETAILS
C6.3 WATER DETAILS
C6.4 GEOPACIFIC DETAILS
C7.1 HAMMERHEAD PLAN/PROFILE (POND2)
L1.1 STREET TREE PLAN
L1.2 STORM WATER DETENTION FACILITY PLANTING PLAN

APPLICANT

Name:	Legend Homes/Matrix Development 12755 SW 69th Avenue #100 Tigard, Oregon 97223
Contact:	Craig Brown
Phone:	(503) 620-8080
Fax:	(503) 598-8900

CIVIL ENGINEER/SURVEYOR

Name:	Otak, Incorporated 17355 SW Boones Ferry Road Lake Oswego, Oregon 97035
Contact:	M. Fares Kekhia, PE
Phone:	(503) 635-3618
Fax:	(503) 635-5395

GEOTECHNICAL ENGINEER

Name:	Geopacific Engineering
Contact:	Scott L. Hardman, PE
Phone:	(503) 598-8445
Fax:	(503) 598-8705

SITE INFORMATION

Site Size:	16.02 Acres
Zoning:	Clackamas County R-3 AND R-20
Proposed Use of Property:	Subdivision for 42 Single Family Residential Units
Legal Description:	Clackamas County Assessor Map 2N1E25CC Tax Lot 00500

PROJECT MAP

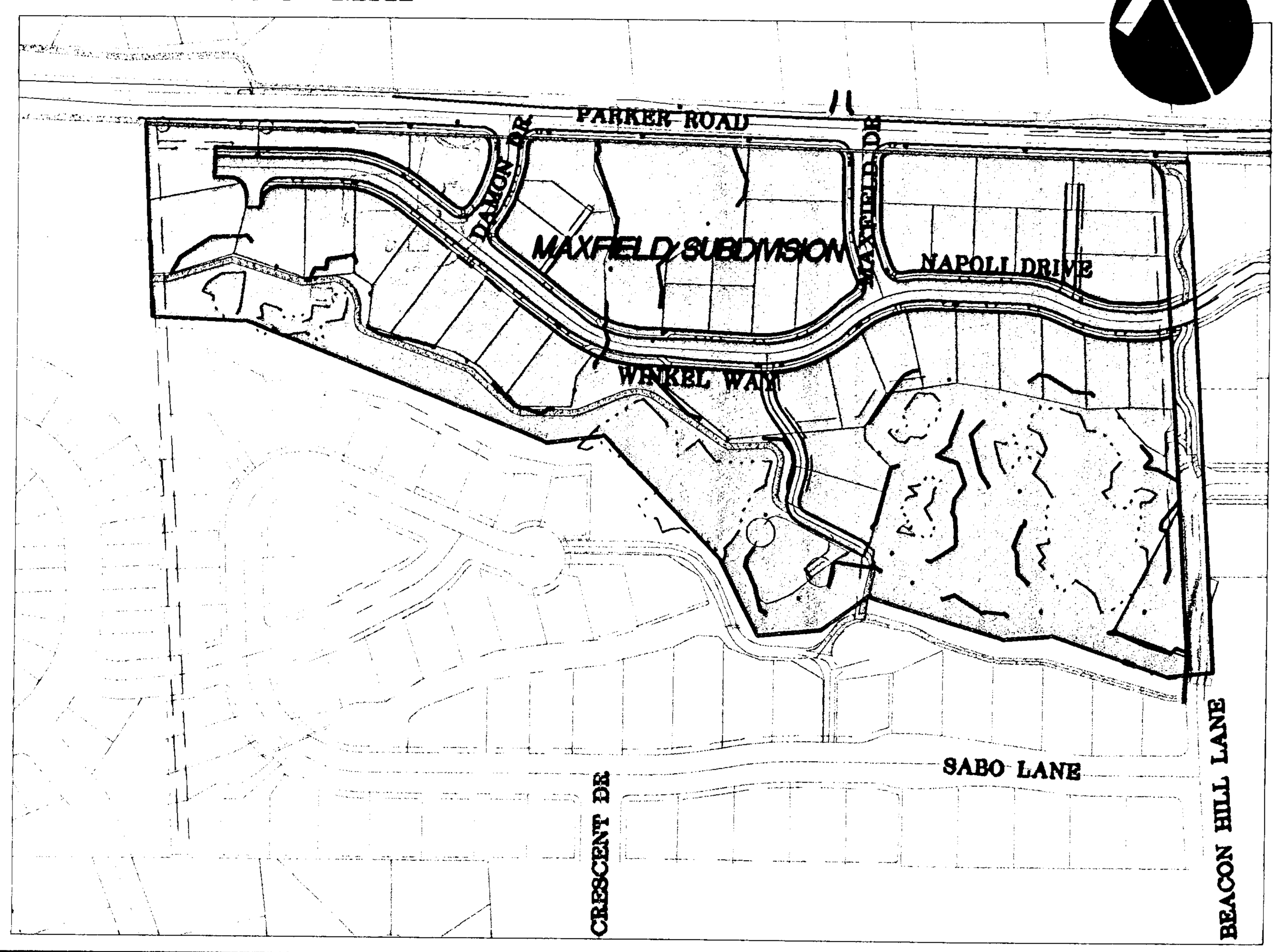

NO.	DATE	BY	REVISION COMMENTS

Design	Drawn	Checked	Date	Initial Issue Date:
JML	JML	MFK	7.20.5	

RECORD DRAWING
BY: [signature]
DATE: 01/11/07

Permitted design drawings stamped by:
Fares M. Kekhia
Engineer 17447
June 30, 2007

LEGEND HOMES
HOME BUILDER

MATRIX DEVELOPMENT CORPORATION
DEVELOPER

"AS BUILT DRAWING"
DATE 1/11/07 BY [signature]

AS-BUILT PLAN SUBMITTAL - JANUARY 11, 2007

MAXFIELD SUBDIVISION
WEST LINN, OR
COVER PLAN

otak Incorporated
17355 SW Boones Ferry Rd.
Lake Oswego, Oregon 97035
Phone: (503) 635-3618
FAX: (503) 635-5395
Internet: WWW.Otak.COM

Project No.	Drawing No.
13227	D227C0.0

Sheet No. C0.0

Copyright 2005 ©

RECD JUN 23 2005

WEST LINN CITY COUNCIL
EXPEDITED LAND DIVISION
DECISION NOTICE

FILE NO. SUB-05-2/MISC-05-04/ZC-05-01

IN THE MATTER OF THE EXPEDITED LAND DIVISION FOR A 42-LOT SUBDIVISION KNOWN AS MAXFIELD INCLUDING A NATURAL DRAINAGWAY PERMIT AND PLANNED UNIT DEVELOPMENT.

At meeting dates of May 9, 2005 and June 13, 2005, the West Linn City Council took action under the provisions of the expedited land division (ELD) process to decide the application for a 42-lot subdivision known as "Maxfield". The application also included a natural drainageway permit and Planned Unit Development. The property is identified as Assessors map 21B-25CC tax lot 500.

Under the provisions of the ELD, City Council serves as West Linn's "local decision maker". Also, according to the provisions of an ELD, no public testimony is permitted at the hearings, nor can the applicant be heard. Public input is by written testimony, which is only allowed during a two-week window, which closed April 7, 2005. Only two neutral letters were submitted. However, in the course of rendering their decision, City Council was allowed to ask questions of City staff.

With full consideration of the findings of fact in the Staff report and applicant's submittal, the construction of Parker Road to arterial standards and the protection of most significant trees per CDC Chapter 55 and 85, Council President Burgess made a motion, seconded by Councilor Gates, to approve the application with the following conditions of approval:

CONDITIONS OF APPROVAL:

1. The applicant shall install markers every 40 feet on lots abutting dedicated open space/resource areas and lots 41 and 42 as "City of West Linn Conservation Area" and "No removal of vegetation permitted."

2. Maintenance agreement shall be signed between the City and Developer for all private facilities and be recorded on the plat prior to acceptance of the subdivision

3. All resource areas protecting tree clusters, wetlands, natural drainageways and transition zones shall be dedicated to the city. Individual trees may be protected by conservation easement

4. The 50" oak, at the rear of lot 9 shall be saved and protected by conservation easement. The roots of the tree shall be protected during all phases of site development and construction.

5. The trails through Road "H" ROW shall be eight feet wide. The trail layout shall minimize disturbance or compaction of tree roots

6. The developer shall meet arterial street design standards for Parker Road where the project site abuts that street.

7. The culverts under Parker Road and "A" Street will need to meet the requirements of the Oregon Department of Fish and Wildlife.

8. The 50-inch oak tree at the rear of lot nine shall be protected by truncating the storm line east of the roots and serving lots west of that location by individual systems; or, diverting the storm line around the roots of the tree and continuing the line west

9. The trail on the north side of the creek shall be asphalt and eight feet wide.

10. All hammerheads or emergency vehicle turnarounds shall meet Tualatin Valley Fire and Rescue (TVFR) standards and shall obtain TVFR approval

11. Tract B's storm detention facility shall be moved to the area south of lot 27. That tract shall be renumbered and conditioned per condition of approval number three

12. Lots 41 and 42 shall have a conservation area established and markers installed and shall also allow for the reasonable accommodation for building on those lots.

Ayes: Mayor King, Council President Burgess, and Councilor Gates
Nayes: Councilor Cummings and Councilor Eberle (motion carried)

FINAL DECISION

Based upon the findings of the local decision maker and the findings contained in the staff report and applicant's submittal file number SUB-05-02/MISC-05-04/ZC-05-01 is hereby approved with conditions.

Norman B. King — June 20, 2005
NORM KING, MAYOR — DATE

WITNESSED BY — 6-20-05
DATE

Mailed this 20 day of June, 2005.

Therefore, the 14-day appeal period ends at 5 p.m., on July 6, 2005

P:Developmntreview:finaldecisions:SUB05-02MAXFIELD

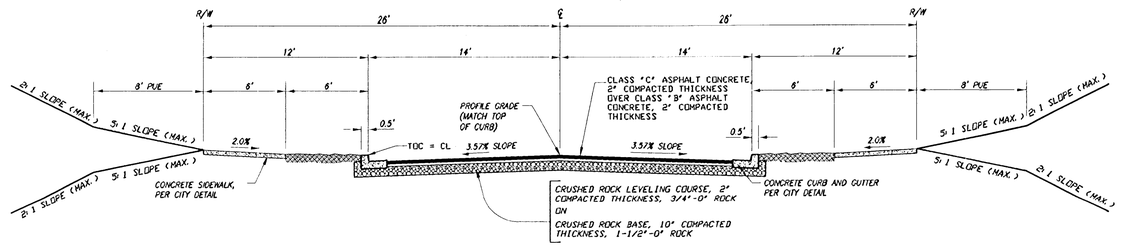

WINKEL WAY (Sta. 1+00.00 to Sta. 6+70.33)
(Sta. 8+48.80 to Sta. 15+61.51)
DAMON DRIVE (Sta. 1+00.00 to Sta. 2+47.35)
MAXFIELD DRIVE (Sta. 1+00.00 to Sta. 2+99.95)

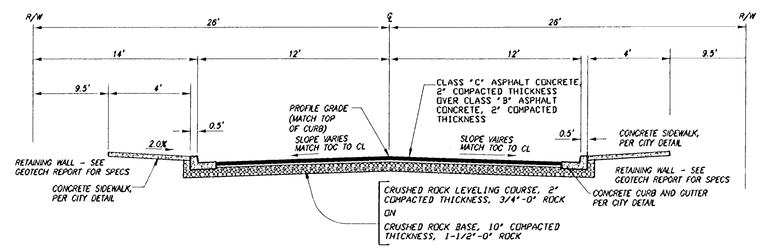

WINKEL WAY (Sta. 6+70.33 to Sta. 8+48.80)

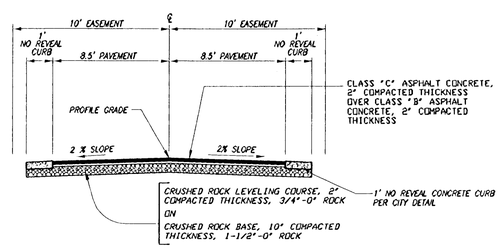

TRACT D
ALLEY E

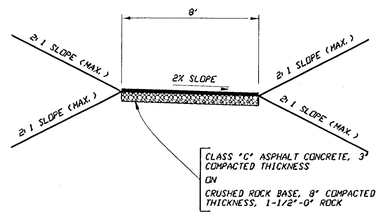

8' WIDE PAVED PATH

NO.	DATE	BY	REVISION COMMENTS	Date	Initial	Issue Date:
Design	JML	Drawn	JML	Checked	MFK	7.20.5

RECORD DRAWING
BY: [illegible]
DATE: 01/11/2007

Permitted design drawings stamped by:
Fares M. Kekhia
Engineer 17447
June 30, 2007

LEGEND HOMES — HOME BUILDER

MATRIX PROFESSIONAL LANDSCAPING — DEVELOPER

"AS BUILT DRAWING"
DATE 1/11/07 BY [illegible]

AS-BUILT PLAN SUBMITTAL - JANUARY 11, 2007

MAXFIELD SUBDIVISION
WEST LINN, OR
CONDITIONS OF APPROVAL
STREET CROSS SECTIONS

otak Incorporated
17355 SW Boones Ferry Rd.
Lake Oswego, Oregon 97035
Phone: (503) 635-3818
FAX: (503) 635-5395
Internet: WWW.Otak.COM

13227 — Project No.
D227C1.0 — Drawing No.
C1.0 — Sheet No.

Copyright 2005 ©

XREF LIST
Ltscale: 1
Resolve
D227X01
MFKSTAMP

LKO LISAB 01/04/2007 9:58am --> R:\DWG\D227C1.0.DWG

XREF LIST
Ltscale: 50
Resolved
D227X001
MFKSTAMP
D227X190
D227X400
D227X680
D227X380

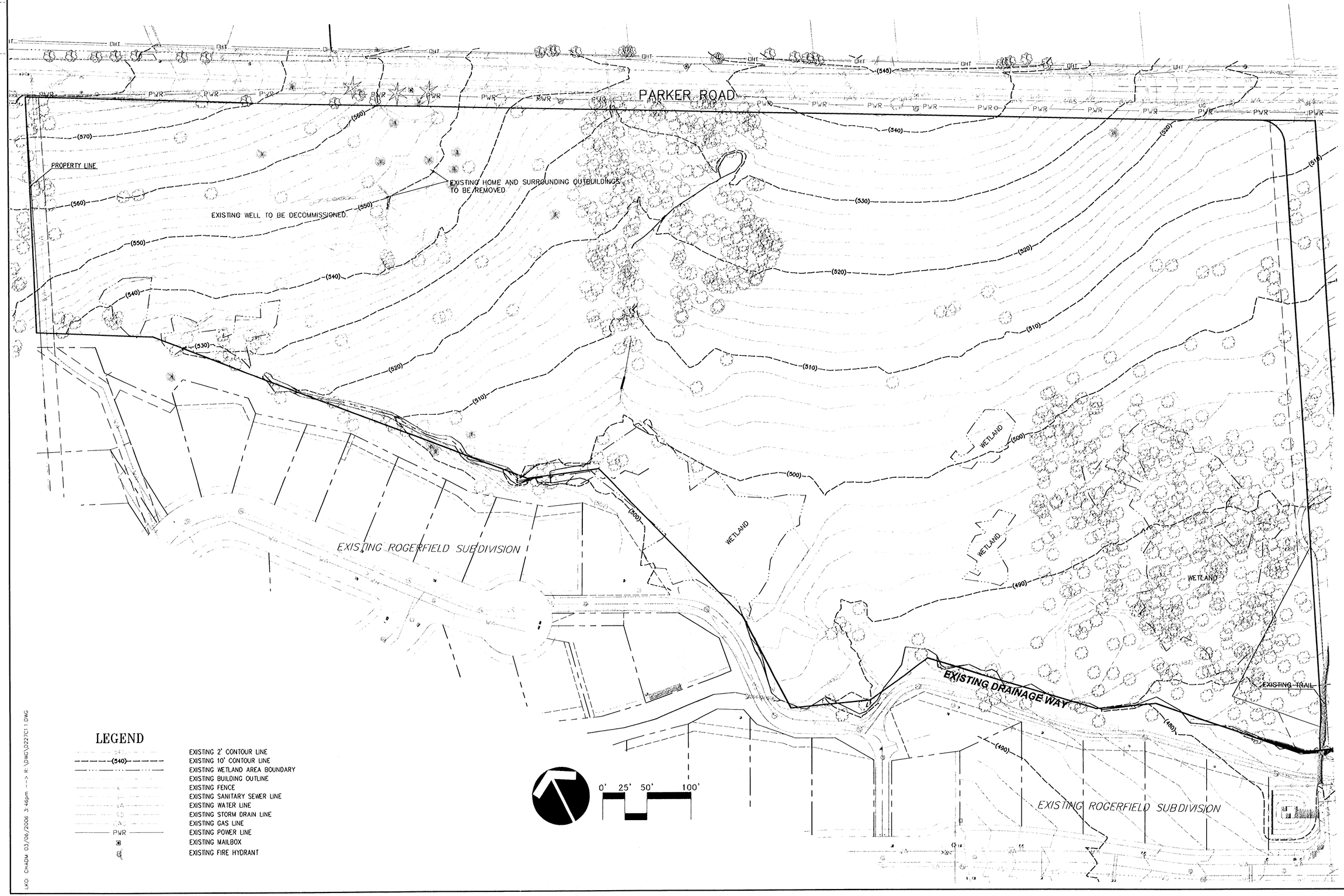

LEGEND

(540)	EXISTING 2' CONTOUR LINE
(540)	EXISTING 10' CONTOUR LINE
	EXISTING WETLAND AREA BOUNDARY
	EXISTING BUILDING OUTLINE
	EXISTING FENCE
	EXISTING SANITARY SEWER LINE
	EXISTING WATER LINE
	EXISTING STORM DRAIN LINE
	EXISTING GAS LINE
PWR	EXISTING POWER LINE
	EXISTING MAILBOX
	EXISTING FIRE HYDRANT

NO	DATE	BY	REVISION COMMENTS

Design	Drawn	Checked	Date
JML	JML	MFK	12.20.5

Initial Issue Date:

RECORD DRAWING
BY: Lance Davis
DATE: 01/11/07

Permitted design drawings stamped by:
Fares M. Kekhia
Engineer 17447
June 30, 2007

LEGEND HOMES
HOME BUILDER

MATRIX DEVELOPMENTS
DEVELOPER

"AS BUILT DRAWING"
DATE 1/11/07 BY Lance Davis

MAXFIELD SUBDIVISION
WEST LINN, OR
EXISTING CONDITIONS

AS-BUILT PLAN SUBMITTAL – JANUARY 11, 2007

otak Incorporated
17355 SW Boones Ferry Rd.
Lake Oswego, Oregon 97035
Phone: (503) 635-3618
FAX: (503) 635-5395
Internet: WWW.Otak.COM

13227 D227C1.1
Project No. Drawing No.

C1.1
Sheet No.

Copyright 2005 ©

LKO: CHADM 03/06/2006 3:46pm --> R:\DWG\D227C1.1.DWG

SEE "PARKER ROAD IMPROVEMENT PLAN" FOR PARKER RD ROW IMPROVEMENTS

PARKER ROAD

DAMON DR

MAXFIELD DRIVE

WINKEL WAY

TRACT A 6,370 sq.ft.

TRACT B 37,044 sq.ft.

TRACT C 318,382 sq.ft.

EXISTING ROGERFIELD SUBDIVISION

EXISTING TRACT

15' EXISTING WATER LINE EASEMENT TO REMAIN

10' WATER LINE EASEMENT

10' UTILITY EASEMENT

25' TRAIL ACCESS & UTILITY EASEMENT

25' ACCESS & UTILITY EASEMENT

19' ALLEY SECTION

15' SANITARY SEWER EASEMENT

15' WIDE TRAIL FOR POND ACCESS

MATCHLINE - WINKEL WAY - SEE BELOW

FU

0' 25 50 100

BOLLARDS

REMOVABLE — NON-REMOVABLE

FRONT VIEW — SIDE VIEW — CAP & HINGE — COVER PLATE — TOP PLATE — PIPE SLEEVE — BASE PLATE — BASE ASSEMBLY — SECTION A-A — PLAN — SECTION B-B — FRONT VIEW — SIDE VIEW

OREGON DEPARTMENT OF TRANSPORTATION

DET 605

KEYNOTES

1. CONSTRUCT WHEELCHAIR RAMP PER DETAIL WL-507A RAMPS MUST ALSO MEET THE LATEST ADA REQUIREMENTS
2. CONSTRUCT 18' WIDE DRIVEWAY PER DETAIL WL-504.
3. CONSTRUCT 6' SIDEWALK PER DETAIL WL-508
4. CONSTRUCT 4' SIDEWALK PER DETAIL WL-508
5. CONSTRUCT 8' AC PATHWAY. ALIGNMENT TO BE DETERMINED DURING CONSTRUCTION WITH CITY OF WEST LINN ARBORIST
6. CONSTRUCT HIGH VINYL-COATED CHAINLINK FENCE PER DETAIL WL-616
7. CONSTRUCT FOOTINGS FOR FUTURE PEDSTRIAN BRIDGE TO BE INSTALLED BY THE CITY OF WEST LINN PARKS DEPT. COORDINATE FOOTING LOCATIONS AND DETAILS WITH WEST LINN PARKS DEPT.
8. CONSTRUCT REMOVABLE BOLLARDS PER DETAIL HERE ON
9. CONSTRUCT 15' WIDE DRIVEWAY PER DETAIL WL-504

LEGEND

- PROPOSED LOT LINE
- PROPOSED ROW
- PROPOSED CURB
- PROPOSED TRAIL
- PROPOSED EASEMENT LINE
- EXISTING BOUNDARY
- SIDEWALKS BUILT BY HOME BUILDER
- SIDEWALKS BUILT WITH PUBLIC IMPROVEMENTS
- PROPOSED TRAIL

FUTURE PARKER CREST SUBDIVISION

MATCHLINE - WINKEL WAY - SEE ABOVE

15' SEWER EASEMENT

AS-BUILT PLAN SUBMITTAL - JANUARY 11, 2007

NO.	DATE	REVISION COMMENTS	BY	Design	Drawn	Checked	Date	Initial Issue Date
				JML	JML	MFK		

RECORD DRAWING
BY: Lance Ferris
DATE: 01/11/07

Permitted design drawings stamped by:
Fares M. Kekhia
Engineer 17447
June 30, 2007

LEGEND HOMES — HOME BUILDER

MATRIX DEVELOPMENT CORP. — DEVELOPER

"AS BUILT DRAWING" DATE 1/11/07 BY Lance Ferris

MAXFIELD SUBDIVISION

WEST LINN, OR
SITE PLAN

otak Incorporated

17355 SW Boones Ferry Rd.
Lake Oswego, Oregon 97035
Phone: (503) 635-3618
FAX: (503) 635-5395
Internet: WWW.otak.COM

13227 D227C1.2
Project No. Drawing No.

C1.2
Sheet No.

Copyright 2005 ©

XREF LIST
tscale: 50
Resolved
D227X001
WFKSTAMP
D227X190
D227X230
LKO CHADM 01/11/2007 4:44pm --> R:\DWG\D227C1.2.DWG

XREF LIST
Ltscale: 1
Resolved
D227X001
MFKSTAMP
D227X190
D227X230
D227X400
D227X430

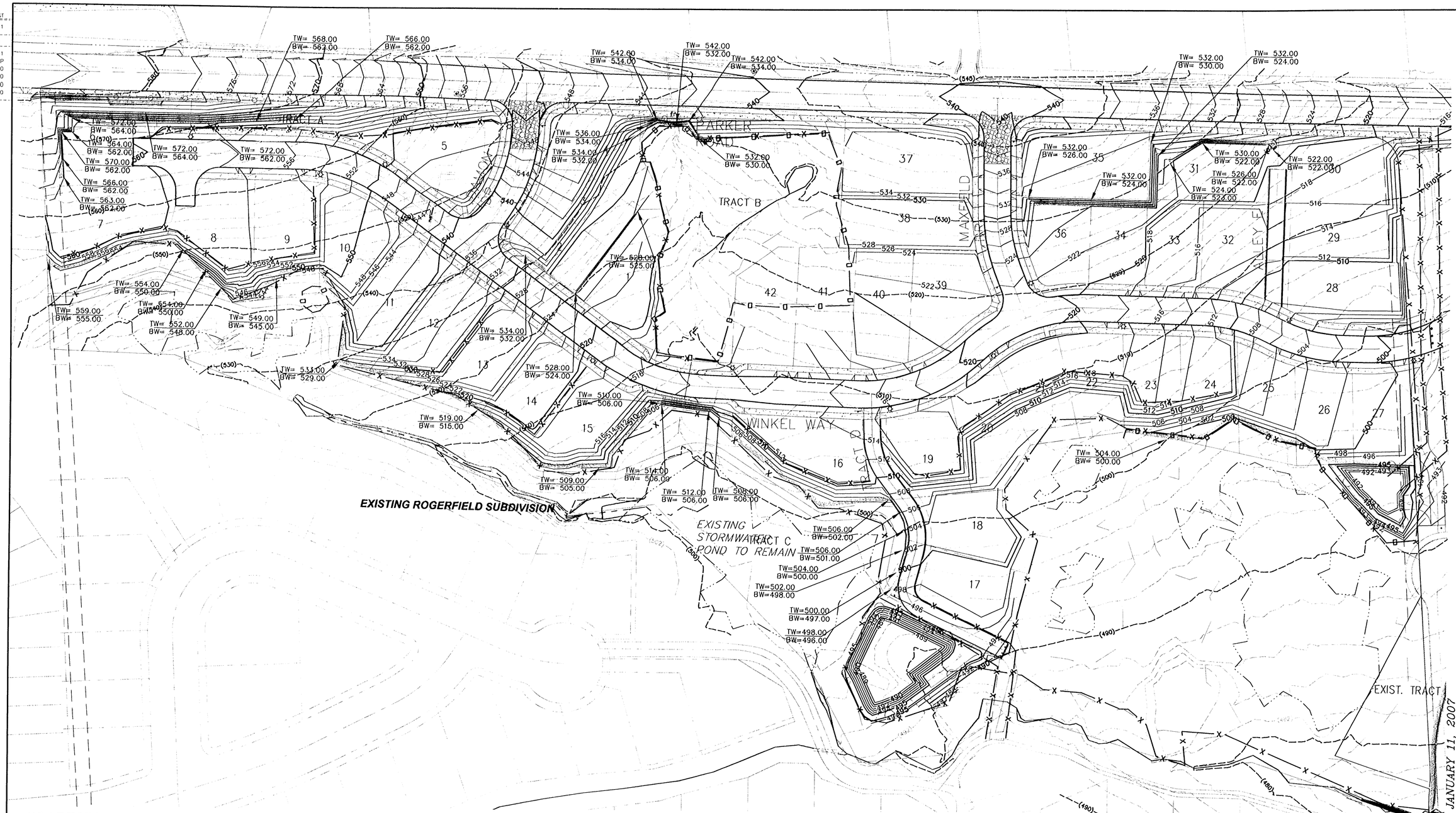

GRADING NOTES

1. SEE PLANS PROVIDED BY GEOPACIFIC FOR RETAINING WALL DESIGNS

2. EXPANSIVE SOILS OCCUR AT SHALLOW DEPTHS IN THE LOWER ELEVATIONS OF THE SITE. EXPANSIVE CLAY SHOULD NOT BE PRESENT WITHIN 10 VERTICAL FEET FROM THE BOTTOM OF FOUNDATIONS. A MINIMUM OF 4 FEET OF ENGINEERED FILL SHOULD BE PLANNED OVERLYING AREAS OF EXPANSIVE CLAY OR THE CLAY SHOULD BE COMPLETELY REMOVED AND REPLACED WITH ENGINEERED FILL. CONTACT THE GEOTECHNICAL ENGINEER FOR MORE DETAILS.

3. ALL FILLS NEED TO BE KEYED IN PER DETAILS IN THE GEOTECHNICAL REPORT.

4. LOTS 6 THROUGH 9 AND 23 AND 24 WILL BE SLOPED 2% BACK TO FRONT WITH POSITIVE DRAINAGE TO THE STREET.

5. IF WEEPING OCCURS DURING CONSTRUCTION, CONTACT AND COORDINATE WITH THE GEOTECHNICAL ENGINEER FOR CORRECTIVE ACTION.

RETAINING WALL NOTES

1. SEE PLANS PROVIDED BY GEOPACIFIC FOR RETAINING WALL DESIGNS

2. LOTS 6,31, AND 35 RETAINING WALL DRAINS TO BE CONNECTED TO THE RESIDENTIAL STORM LATERALS.

3. TRACT B RETAINING WALLS ALONG PARKER ROAD AND WINKEL WAY TO DAYLIGHT INTO EXISTING NATURAL AREA.

4. THE 4' WALLS BEHIND LOTS 7-27 TO DRAIN INTO OPEN SPACE TO THE SOUTH

5. TRACT A WALL TO DRAIN INTO TRACT A STORM LATERAL

6. ALL DAYLIGHT RETAINING WALL DRAINS SHALL BE RIP RAPPED AT DISCHARGE POINTS

AS-BUILT NOTE

FINAL GRADES APPEAR CONSISTENT WITH DESIGN GRADES. NO AS-BUILT SURVEY WAS PERFORMED TO VERIFY GRADES.

LEGEND

EXISTING 2' CONTOUR	
EXISTING 10' CONTOUR	
CONSTRUCTED 2' CONTOUR	522
CONSTRUCTED 10' CONTOUR	530
CONSTRUCTED ROCKERY WALL	
CLEARING LIMITS	
PROPOSED 2' CONTOUR LINE	542
PROPOSED 10' CONTOUR LINE	540
PRIMARY SEDIMENT FENCE	X
PHASE II SEDIMENT FENCE	X
TREE PRESERVATION FENCING	O
CLEARING LIMITS	
GRAVEL CONSTRUCTION ENTRANCE	

GRASS SEED NOTE:

ALL OPEN SPACE AND TRAIL CORRIDORS, INCLUDING ALL DISTURBED AREAS, THAT WILL BE CITY MAINTAINED PROPERTY SHALL BE SEEDED WITH "PRO-TIME" COMPANION SEED MIX BY HOBBS & HOPKINS LTD., AT A RATE OF 15 - 30 LBS. PER ACRE (503-239-7518)

NO.	DATE	BY	REVISION COMMENTS
Design	Drawn	Checked	Date Initial Issue Date
JML	JML	MFK	7.20.5

RECORD DRAWING
BY: [illegible]
DATE: 01/11/07

Permitted design drawings stamped by:
Fares M. Kekhia
Engineer 17447
June 30, 2007

LEGEND HOMES
HOME BUILDER

MATRIX DEVELOPMENT CORPORATION
DEVELOPER

"AS BUILT DRAWING"
DATE 1/11/07 BY [illegible]

MAXFIELD SUBDIVISION
WEST LINN, OR
COMPOSITE GRADING PLAN

AS-BUILT PLAN SUBMITTAL - JANUARY 11, 2007

otak Incorporated
17355 SW Boones Ferry Rd.
Lake Oswego, Oregon 97035
Phone: (503) 635-3618
FAX: (503) 635-5395
Internet: WWW.Otak.COM

13227 D227C1.3
Project No. Drawing No.
C1.3
Sheet No.

Copyright 2005 ©

LKO: LISAB 12/19/2006 3:27pm --> R:\DWG\D227C1.3.DWG

REF LIST
scale: 50
resolved
227X230
227X001
FKSTAMP
227X680
227X190
227X600
227X380

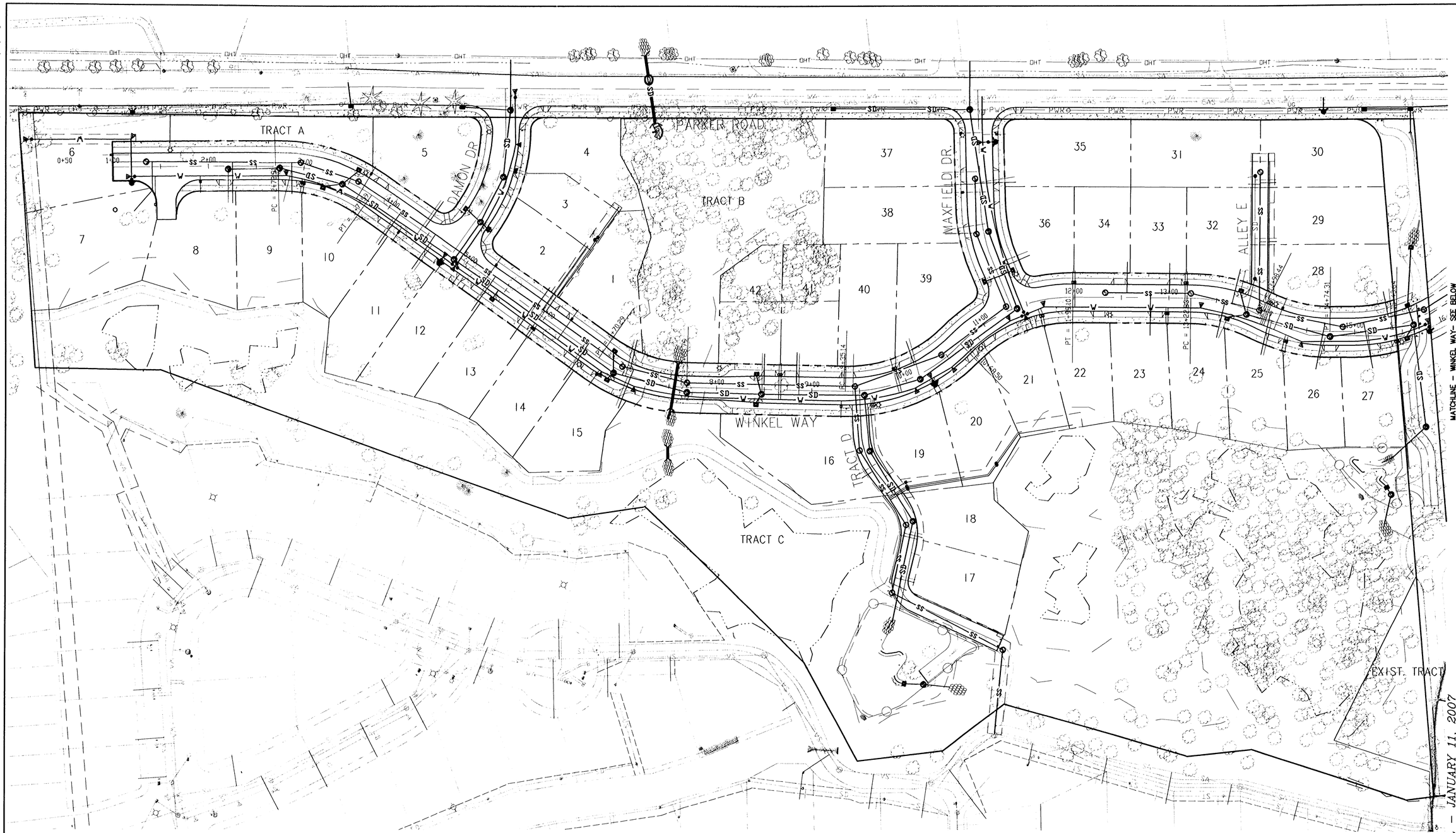

UTILITY NOTES

1. LOTS 6 THROUGH 9 AND 22 AND 23 WILL BE SLOPED 2% BACK TO FRONT WITH POSITIVE DRAINAGE TO THE STREET. DRAINAGE WILL BE PROVIDED THROUGH WEEPHOLES IN THE CURB.

LEGEND

—SS—	PROPOSED SANITARY SEWER LINE
	PROPOSED SANITARY SEWER CLEAN OUT
	PROPOSED SANITARY SEWER MANHOLE
	PROPOSED SANITARY SEWER LATERAL
—SD—	PROPOSED STORM SEWER LINE
	PROPOSED STORM SEWER LATERAL
	PROPOSED STORM SEWER MANHOLE
	PROPOSED CURB INLET
	PROPOSED FIRE HYDRANT
—W—	PROPOSED WATER LINE
	PROPOSED THRUST BLOCK
	PROPOSED LIGHT POLE
	PROPOSED WATER METER

NO.	DATE	BY	REVISION COMMENTS	Date	Initial	Issue Date:
Design	JML	Drawn	JML	Checked	MFK	

RECORD DRAWING
BY: [illegible]
DATE: 01/11/07

Permitted design drawings stamped by:
Fares M. Kekhia
Engineer 17447
June 30, 2007

LEGEND HOMES
HOME BUILDER

MATRIX
DEVELOPER

"AS BUILT DRAWING"
DATE 1/11/07 BY [illegible]

MAXFIELD SUBDIVISION

WEST LINN, OR
COMPOSITE UTILITY PLAN

AS-BUILT PLAN SUBMITTAL – JANUARY 11, 2007

otak
Incorporated

17355 SW Boones Ferry Rd.
Lake Oswego, Oregon 97035
Phone: (503) 635-3618
FAX: (503) 635-5395
Internet: WWW.Otak.COM

13227 D227C1.4
Project No. Drawing No.

C1.4
Sheet No.

Copyright 2005 ©

LKO: CHADM 01/11/2007 4:49pm --> R:\DWG\D227C1.4.DWG

XREF LIST
Ltscale: 50
Resolved
D227X001
MFKSTAMP
D227X190
D227X230

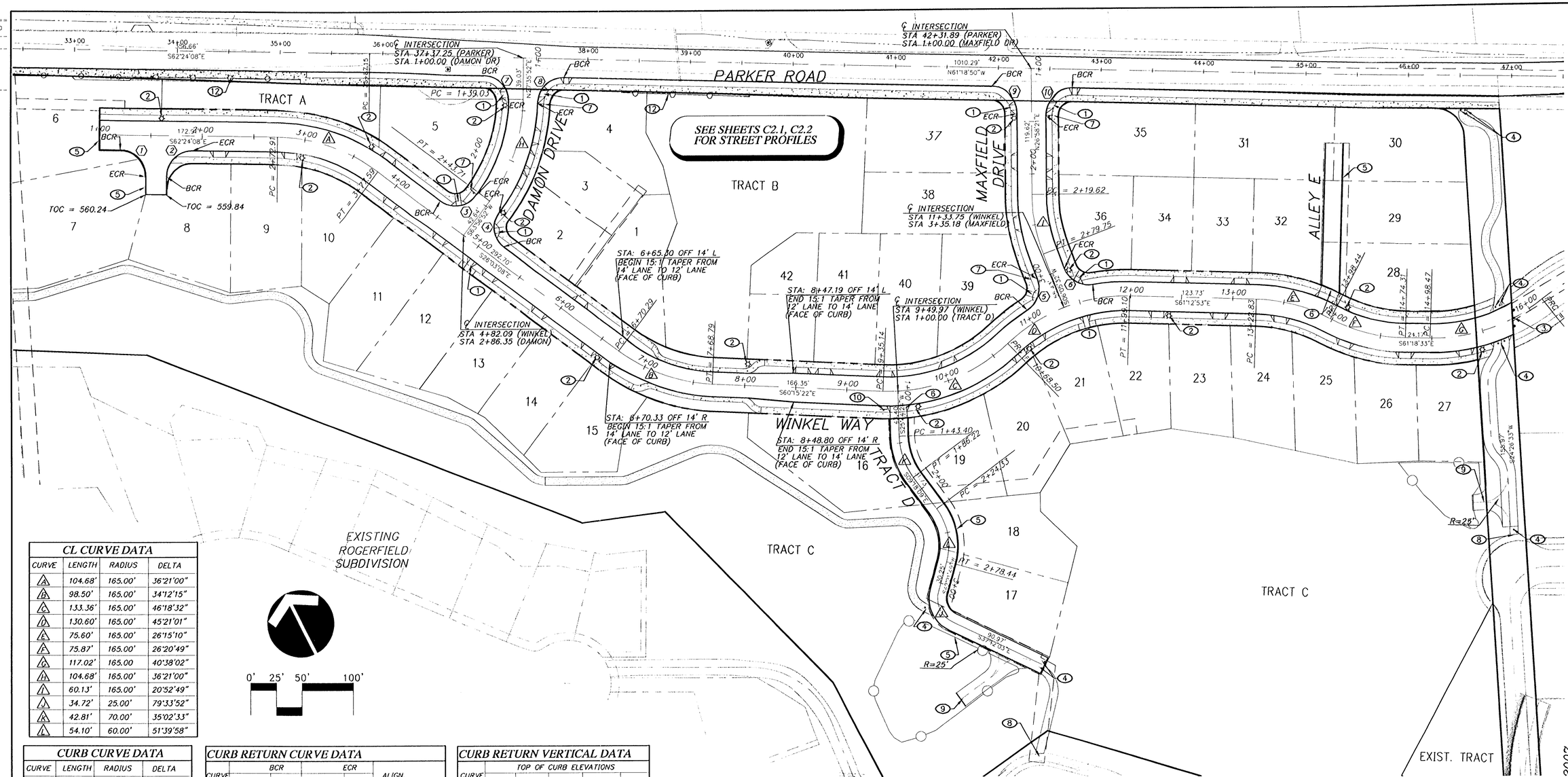

CL CURVE DATA

CURVE	LENGTH	RADIUS	DELTA
A	104.68'	165.00'	36°21'00"
B	98.50'	165.00'	34°12'15"
C	133.36'	165.00'	46°18'32"
D	130.60'	165.00'	45°21'01"
E	75.60'	165.00'	26°15'10"
F	75.87'	165.00'	26°20'49"
G	117.02'	165.00	40°38'02"
H	104.68'	165.00'	36°21'00"
I	60.13'	165.00'	20°52'49"
J	34.72'	25.00'	79°33'52"
K	42.81'	70.00'	35°02'33"
L	54.10'	60.00'	51°39'58"

CURB CURVE DATA

CURVE	LENGTH	RADIUS	DELTA
1	39.27'	25.00'	90°00'00"
2	39.27'	25.00'	90°00'00"
3	39.27'	25.00'	90°00'00"
4	39.27'	25.00'	90°00'00"
5	34.46'	25.00'	78°58'43"
6	39.46'	25.00'	78°58'43"
7	39.44'	25.00'	90°22'58"
8	39.17'	25.00'	89°45'49"
9	38.52'	25.00'	88°17'11"
10	40.02'	25.00'	91°42'49"

CURB RETURN CURVE DATA

CURVE	BCR STR. STA.	BCR OFFSET	ECR STR. STA.	ECR OFFSET	ALIGN.
1	1+20.50	14'R	1+45.50	39'R	WINKEL, WINKEL
2	1+65.50	39'R	1+90.50	14'R	WINKEL, WINKEL
3	4+43.09	14'L	2+47.35	14'R	WINKEL, DAMON
4	5+21.09	14'L	2+47.35	14'L	WINKEL, DAMON
5	11+02.01	14'L	2+99.95	14'R	WINKEL, MAXFIELD
6	11+65.49	14'L	2+99.95	14'L	WINKEL, MAXFIELD
7	36+99.02	18'R	1+43.27	14'R	PARKER, DAMON
8	37+77.02	18'R	1+42.85	14'L	PARKER, DAMON
9	41+94.16	18'R	1+41.85	14'R	PARKER, MAXFIELD
10	42+72.20	18'R	1+44.19	14'L	PARKER, MAXFIELD

CURB RETURN VERTICAL DATA

CURVE	TOP OF CURB ELEVATIONS BCR	1/4 PT.	1/2 PT.	3/4 PT.	ECR
1	559.90	559.90	559.90	559.90	559.90
2	559.50	559.27	559.00	558.73	558.50
3	541.98	540.74	539.49	538.38	537.58
4	532.32	533.64	535.20	536.63	537.58
5	520.93	521.00	521.06	521.13	521.19
6	520.61	520.69	520.75	520.88	521.19
7	554.20	553.20	551.94	550.69	549.76
8	548.74	549.36	549.88	550.07	549.73
9	540.55	540.57	540.36	539.98	539.48
10	540.65	540.61	540.33	539.89	539.35

LEGEND

- PROPOSED LOT LINE
- PROPOSED ROW
- PROPOSED CURB
- PROPOSED TRAIL
- PROPOSED EASEMENT LINE
- EXISTING BOUNDARY
- SIDEWALKS BUILT BY HOME BUILDER
- SIDEWALKS BUILT WITH PUBLIC IMPROVEMENTS
- PROPOSED TRAIL

GENERAL NOTES

1. ALL WORK IN THE PUBLIC RIGHT-OF-WAY SHALL CONFORM TO CURRENT CITY OF WEST LINN STANDARD DRAWINGS AND SPECIFICATIONS.
2. EROSION CONTROL MUST BE INSTALLED AND MAINTAINED PER THE APPROVED EROSION CONTROL PLANS.
3. STATIONING IS FROM ROAD CENTERLINE UNLESS OTHERWISE NOTED.
4. ALL TREES WITHIN THE PUBLIC RIGHT-OF WAY SHALL BE REMOVED AND DISPOSED OF OFF-SITE AT A LEGAL DUMP SITE, UNLESS OTHERWISE NOTED.
5. CONSTRUCT ROADS PER DESIGNATED SECTION ON SHEET C1.0.
6. SIDEWALK BENCHES SHALL BE INCLUDED IN ALL STREET EXCAVATION OR EMBANKMENT UNLESS OTHERWISE SPECIFIED OR APPROVED BY ENGINEER.
7. PAVING WIDTHS AND NUMBER OF PANELS SHALL BE AS FOLLOWS WHEN PAVING WITH A.C.

STREET WIDTH	PANELS	PAVING WIDTH
28'	2	14'

AS-BUILT NOTE

FINAL GRADES APPEAR CONSISTENT WITH DESIGN GRADES. NO AS-BUILT SURVEY WAS PERFORMED TO VERIFY GRADES.

CONSTRUCTION KEYNOTES

1. CONSTRUCT WHEELCHAIR RAMP PER DETAIL WL-507A.
2. INSTALL STREET LIGHT, 30-FOOT, BRONZE, ROUND, DIRECT BURY, FIBERGLASS LIGHT POLE, WITH A 100W, 240V, HPS, "SHOEBOX" STYLE LUMINAIRE, MOUNTED ON AN 8-INCH MASTARM, 25-FEET ABOVE THE ROADWAY.
3. INSTALL TYPE III BARRICADE PER CITY OF WEST LINN STD DETAL WL-515
4. INSTALL BOLLARDS PER CITY OF WEST LINN STANDARDS.
5. NO PARKING SIGNS
6. INSTALL 18' COMMERCIAL DRIVEWAY APRON PER DETAIL WL-204
7. INSTALL STOP AND STREET SIGNS
8. CONNECT PROPOSED TRAIL TO NEW SIDEWALK.
9. POND ACCESS/TURNAROUND
10. SIGN INDICATING ACCESS TO TRAIL
11. NOT USED
12. (PARKER ROAD) INSTALL 4' VINYL COATED CHAINLINK FENCE

NO.	DATE	BY	REVISION COMMENTS

Design: JML | Drawn: JML | Checked: MFK | Date: 7.20.5 | Initial Issue Date:

RECORD DRAWING
BY: [illegible]
DATE: 01/11/07

Permitted design drawings stamped by:
Fares M. Kekhia
Engineer 17447
June 30, 2007

LEGEND HOMES — HOME BUILDER

MATRIX DEVELOPMENT CORP. — DEVELOPER

"AS BUILT DRAWING"
DATE 1/11/07 BY [illegible]

MAXFIELD SUBDIVISION

WEST LINN, OR
STREET PLAN
WINKEL WAY, DAMON DRIVE, MAXFIELD DRIVE,
TRACT D & ALLEY E

AS-BUILT PLAN SUBMITTAL – JANUARY 11, 2007

otak Incorporated
17355 SW Boones Ferry Rd.
Lake Oswego, Oregon 97035
Phone: (503) 635-3618
FAX: (503) 635-5395
Internet: WWW.Otak.COM

13227 D227C2.0
Project No. Drawing No.
C2.0
Sheet No.

Copyright 2005 ©

LKD CHAFM 01/11/2007 4:52pm --> R:\DWG\D227C2.0.DWG

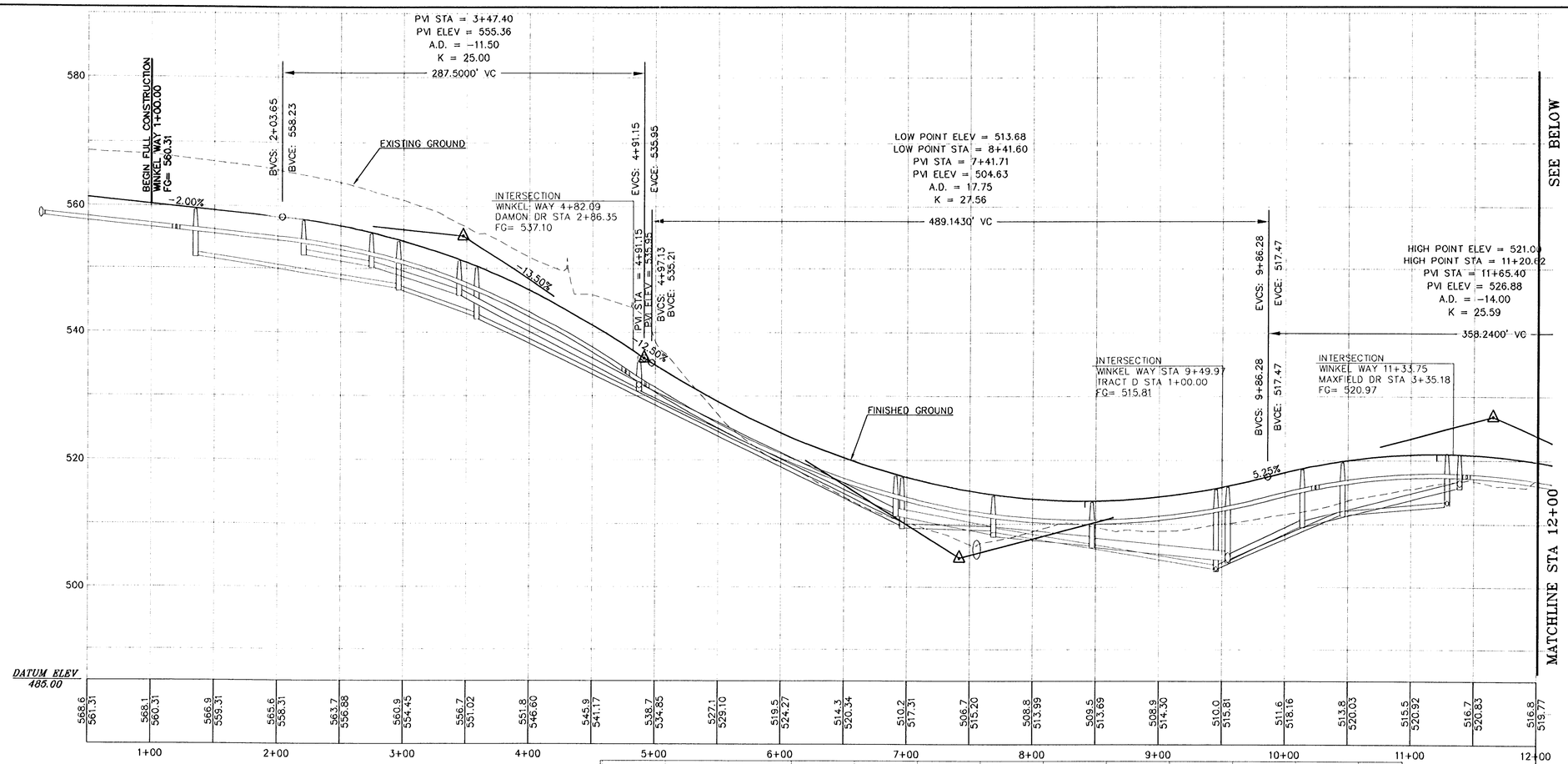

WINKEL WAY

1 / C2.1

SCALE: 1"=50' HORZ.
1"=10' VERT.

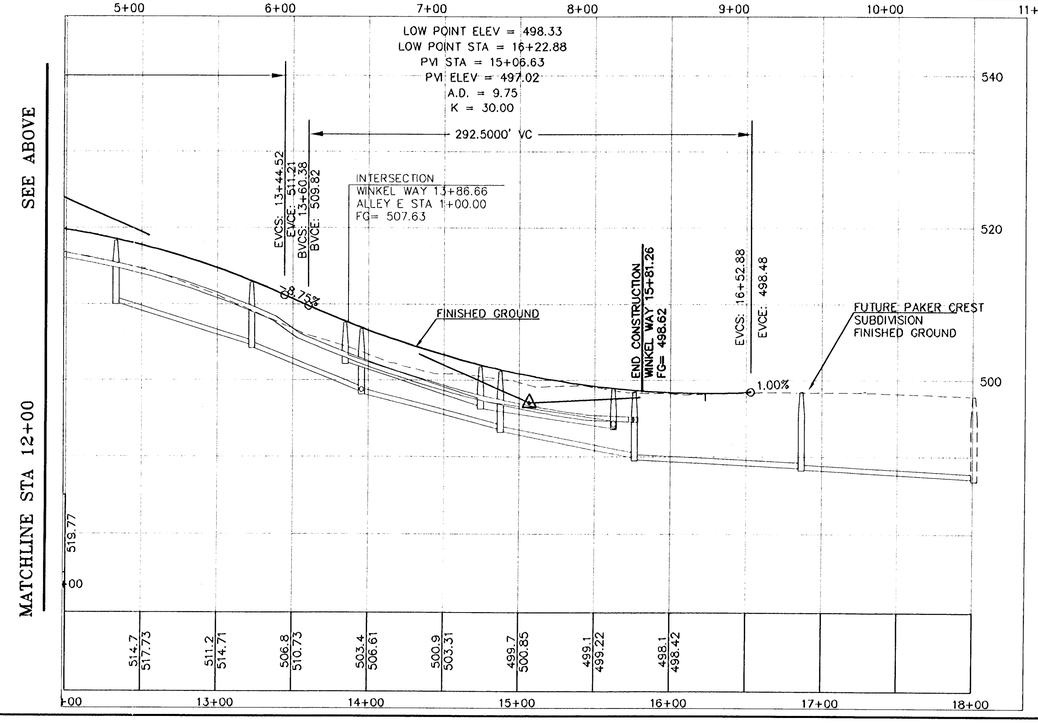

AS-BUILT NOTE

FINAL GRADES APPEAR CONSISTENT WITH DESIGN GRADES. NO AS-BUILT SURVEY WAS PERFORMED TO VERIFY GRADES.

NO.	DATE	BY	REVISION COMMENTS

Design: JML Drawn: JML Checked: MFK Date: 7.20.5 Initial Issue Date:

RECORD DRAWING
BY: [illegible]
DATE: 01/11/07

Permitted design drawings stamped by:
Fares M. Kekhia
Engineer 17447
June 30, 2007

LEGEND HOMES — HOME BUILDER

MATRIX DEVELOPMENT CORPORATION — DEVELOPER

"AS BUILT DRAWING"
DATE 1/11/07 BY [illegible]

AS-BUILT PLAN SUBMITTAL – JANUARY 11, 2007

MAXFIELD SUBDIVISION

WEST LINN, OR
STREET PROFILES
WINKEL WAY

otak Incorporated

17355 SW Boones Perry Rd
Lake Oswego, Oregon 97035
Phone: (503) 635-3618
FAX: (503) 635-5395
Internet: WWW.Otak.COM

13227 D227C2.1
Project No. Drawing No.

C2.1
Sheet No.

Copyright 2005 ©

REF LIST
tscale: 50
esolved
227X001
IFKSTAMP
227X900
JKO USER 01/11/2007 3:11pm --> R:\TNW\D227C2.1.DWG

XREF LIST
Ltscale: 1
Resolved
D227X001
MFKSTAMP
D227x900

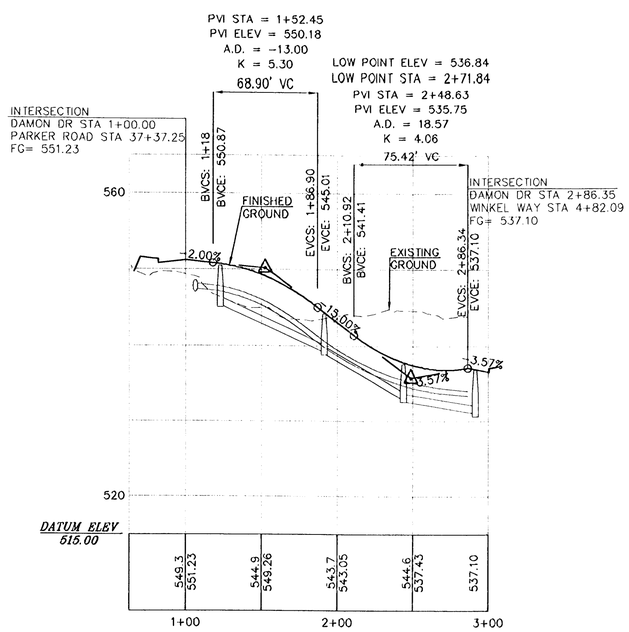

DAMON DRIVE

SCALE: 1"=50' HORZ.
1"=10' VERT.

2
C2.2

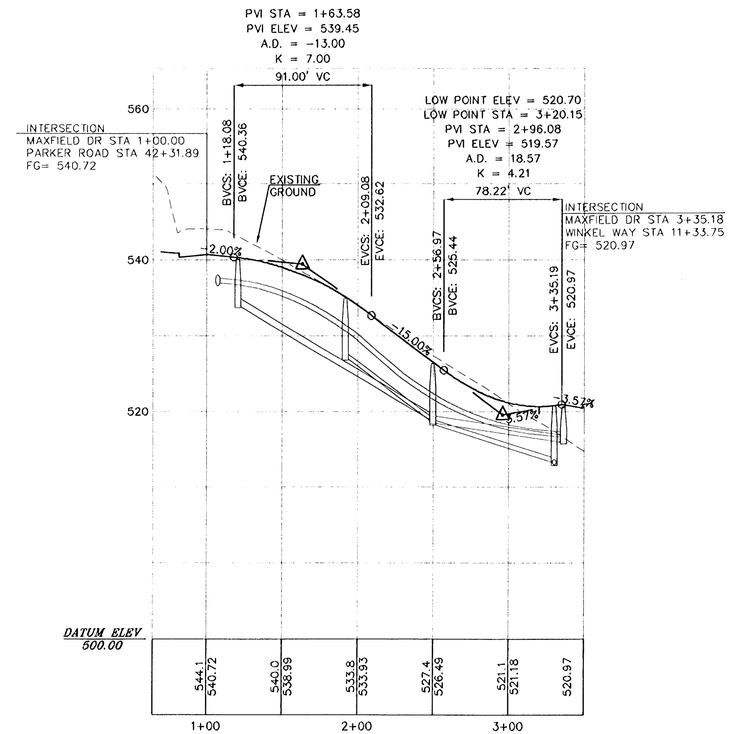

MAXFIELD DRIVE

SCALE: 1"=50' HORZ.
1"=10' VERT.

3
C2.2

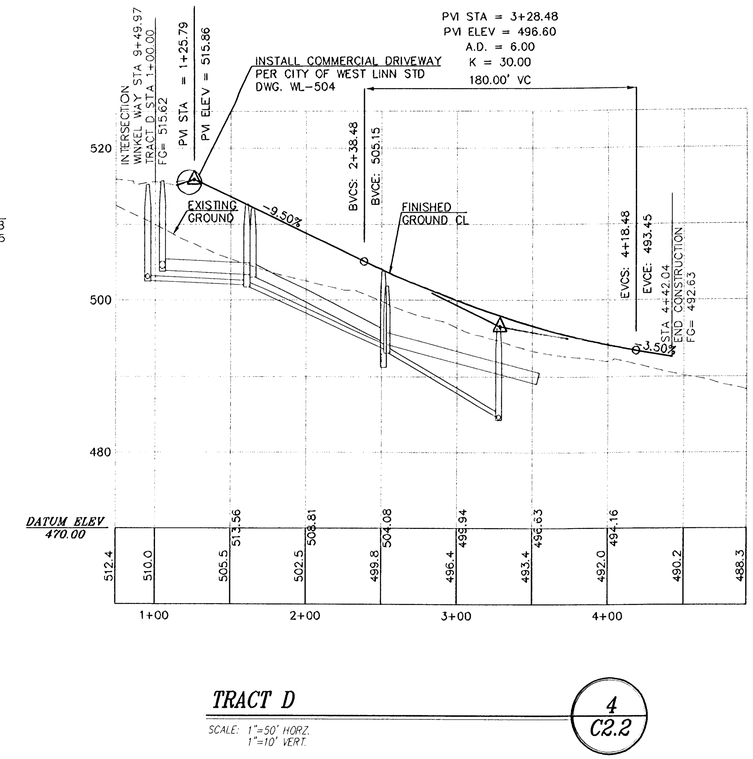

TRACT D

SCALE: 1"=50' HORZ.
1"=10' VERT.

4
C2.2

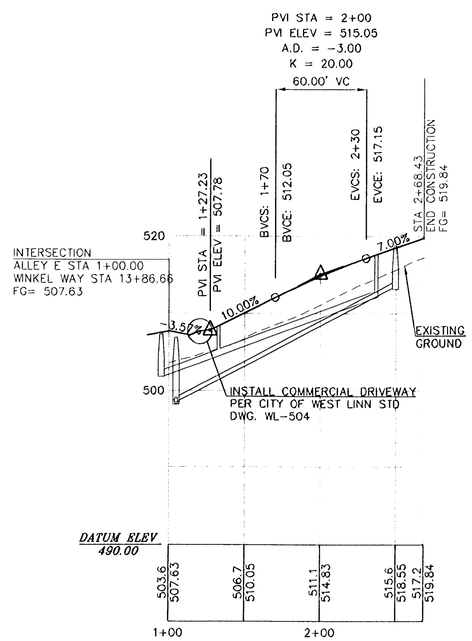

ALLEY E

SCALE: 1"=50' HORZ.
1"=10' VERT.

5
C2.2

AS-BUILT NOTE

FINAL GRADES APPEAR CONSISTENT WITH DESIGN GRADES.
NO AS-BUILT SURVEY WAS PERFORMED TO VERIFY GRADES.

NO.	DATE	BY	REVISION COMMENTS	Date	Initial	Issue Date
Design		Drawn		Checked		
JML		JML		MFK		

RECORD DRAWING
BY: [illegible]
DATE: 01/11/07

Permitted design drawings stamped by:
Fares M. Kekhia
Engineer 17447
June 30, 2007

LEGEND HOMES
HOME BUILDER

MATRIX
DEVELOPER

"AS BUILT DRAWING"
DATE 1/11/07 BY [illegible]

AS-BUILT PLAN SUBMITTAL – JANUARY 11, 2007

MAXFIELD SUBDIVISION

WEST LINN, OR
STREET PROFILE
DAMON DRIVE, MAXFIELD DRIVE & TRACT D

otak
Incorporated

17355 SW Boones Ferry Rd.
Lake Oswego, Oregon 97035
Phone: (503) 635-3818
FAX: (503) 635-5395
Internet: WWW.Otak.COM

13227 D227C2.2
Project No. Drawing No.

C2.2
Sheet No.

Copyright 2005 ©

LKD: LISAB 01/11/2007 3:12pm ---> R:\DWG\D227C2.2.DWG

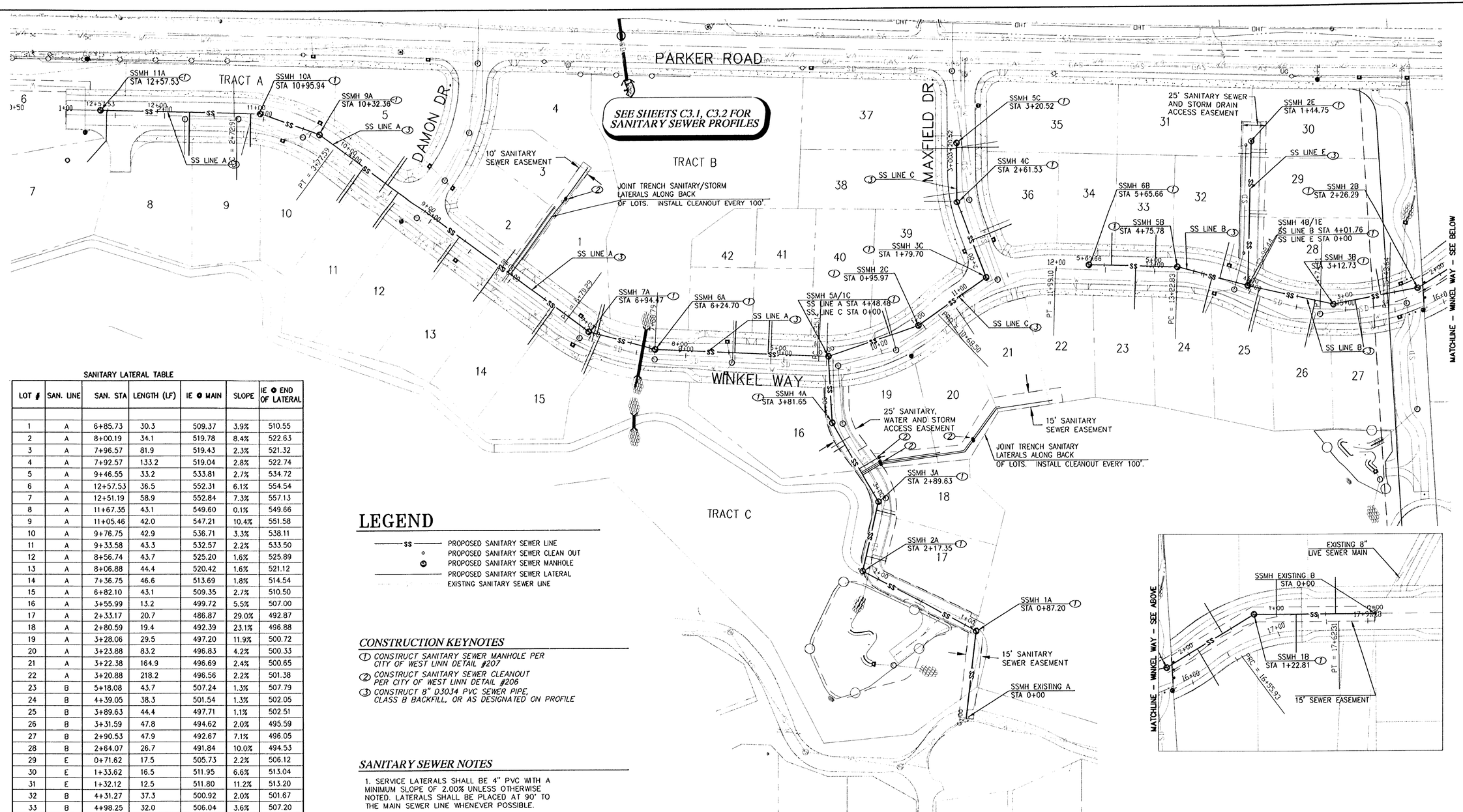

SANITARY LATERAL TABLE

LOT #	SAN. LINE	SAN. STA	LENGTH (LF)	IE @ MAIN	SLOPE	IE @ END OF LATERAL
1	A	6+85.73	30.3	509.37	3.9%	510.55
2	A	8+00.19	34.1	519.78	8.4%	522.63
3	A	7+96.57	81.9	519.43	2.3%	521.32
4	A	7+92.57	133.2	519.04	2.8%	522.74
5	A	9+46.55	33.2	533.81	2.7%	534.72
6	A	12+57.53	36.5	552.31	6.1%	554.54
7	A	12+51.19	58.9	552.84	7.3%	557.13
8	A	11+67.35	43.1	549.60	0.1%	549.66
9	A	11+05.46	42.0	547.21	10.4%	551.58
10	A	9+76.75	42.9	536.71	3.3%	538.11
11	A	9+33.58	43.3	532.57	2.2%	533.50
12	A	8+56.74	43.7	525.20	1.6%	525.89
13	A	8+06.88	44.4	520.42	1.6%	521.12
14	A	7+36.75	46.6	513.69	1.8%	514.54
15	A	6+82.10	43.1	509.35	2.7%	510.50
16	A	3+55.99	13.2	499.72	5.5%	507.00
17	A	2+33.17	20.7	486.87	29.0%	492.87
18	A	2+80.59	19.4	492.39	23.1%	496.88
19	A	3+28.06	29.5	497.20	11.9%	500.72
20	A	3+23.88	83.2	496.83	4.2%	500.33
21	A	3+22.38	164.9	496.69	2.4%	500.65
22	A	3+20.88	218.2	496.56	2.2%	501.38
23	B	5+18.08	43.7	507.24	1.3%	507.79
24	B	4+39.05	38.3	501.54	1.3%	502.05
25	B	3+89.63	44.4	497.71	1.1%	502.51
26	B	3+31.59	47.8	494.62	2.0%	495.59
27	B	2+90.53	47.9	492.67	7.1%	496.05
28	B	2+64.07	26.7	491.84	10.0%	494.53
29	E	0+71.62	17.5	505.73	2.2%	506.12
30	E	1+33.62	16.5	511.95	6.6%	513.04
31	E	1+32.12	12.5	511.80	11.2%	513.20
32	B	4+31.27	37.3	500.92	2.0%	501.67
33	B	4+98.25	32.0	506.04	3.6%	507.20
34	B	5+42.75	32.9	508.74	4.2%	510.10
35	C	3+15.93	42.6	526.87	2.7%	528.01
36	C	2+20.10	43.1	516.10	1.9%	516.92
37	C	3+15.05	32.8	526.74	1.3%	527.18
38	C	2+62.74	33.2	519.03	6.8%	521.29
39	C	0+66.04	25.6	509.08	9.8%	511.60
40	A	4+59.79	32.1	503.33	15.4%	508.27
41	A	5+09.86	33.7	504.98	4.9%	506.64
42	A	5+43.75	31.6	506.09	7.4%	508.44
PC 31**	B	1+60.00	35.5	488.98	2.0%	489.86
PC 30**	B	1+00.00	35.9	488.18	2.0%	489.06
PC 29**	B	0+40.00	37.7	487.58	2.0%	488.50
PC 1**	B	1+90.00	42.3	489.28	2.0%	490.29
PC 2**	B	0+80.00	38.6	487.98	2.0%	488.92

* CONSTRUCT PER DETAIL WL-218 (SCHEME 2)
** FUTURE LOTS IN THE PARKER CREST DEVELOPMENT - SLOPE @ 2% MIN.

LEGEND

- —SS— PROPOSED SANITARY SEWER LINE
- ○ PROPOSED SANITARY SEWER CLEAN OUT
- Ⓜ PROPOSED SANITARY SEWER MANHOLE
- PROPOSED SANITARY SEWER LATERAL
- EXISTING SANITARY SEWER LINE

CONSTRUCTION KEYNOTES

1. CONSTRUCT SANITARY SEWER MANHOLE PER CITY OF WEST LINN DETAIL #207
2. CONSTRUCT SANITARY SEWER CLEANOUT PER CITY OF WEST LINN DETAIL #206
3. CONSTRUCT 8" D3034 PVC SEWER PIPE, CLASS B BACKFILL, OR AS DESIGNATED ON PROFILE

SANITARY SEWER NOTES

1. SERVICE LATERALS SHALL BE 4" PVC WITH A MINIMUM SLOPE OF 2.00% UNLESS OTHERWISE NOTED. LATERALS SHALL BE PLACED AT 90° TO THE MAIN SEWER LINE WHENEVER POSSIBLE.

2. ALL SANITARY SEWER SHALL BE CONSTRUCTED WITH PVC PIPE EXCEPT WHERE SPECIFIED.

3. WATER MAINS SHALL BE INSTALLED A MINIMUM CLEAR DISTANCE OF 10' HORIZONTALLY FROM SANITARY SEWER AND SHALL BE INSTALLED TO GO OVER THE TOP OF SUCH SEWERS WITH A MINIMUM OF 18 INCHES OF CLEARANCE AT INTERSECTIONS IN ACCORDANCE WITH THE REQUIREMENTS OF OAR CHAPTER 333, PUBLIC WATER SYSTEMS.

4. CONTRACTOR TO VERIFY INVERTS OF EXISTING STRUCTURES PRIOR TO CONSTRUCTION. CONTACT ENGINEER IF ANY DISCREPANCIES ARE FOUND BETWEEN THE FIELD AND THE PLANS.

0' 25' 50' 100'

NO.	DATE	BY	REVISION COMMENTS	Date	Initial Issue Date
Design	Drawn	Checked			
JML	JML	MFK		7.20.5	

RECORD DRAWING
BY: Sam Phillips
DATE: 01/11/07

Permitted design drawings stamped by:
Fares M. Kekhia
Engineer 17447
June 30, 2007

LEGEND HOMES
HOME BUILDER

MATRIX DEVELOPMENT CORPORATION
DEVELOPER

"AS BUILT DRAWING"
DATE 1/11/07 BY

MAXFIELD SUBDIVISION
WEST LINN, OR
SANITARY SEWER PLAN

AS-BUILT PLAN SUBMITTAL - JANUARY 11, 2007

otak Incorporated
17355 SW Boones Ferry Rd.
Lake Oswego, Oregon 97035
Phone: (503) 635-3618
FAX: (503) 635-5395
Internet: WWW.Otak.COM

13227 D227C3.0
Project No. Drawing No.

C3.0
Sheet No.

Copyright 2005 ©

LKO: CHADM 01/11/2007 4:56pm --> R:\DWG\D227C3.0.DWG

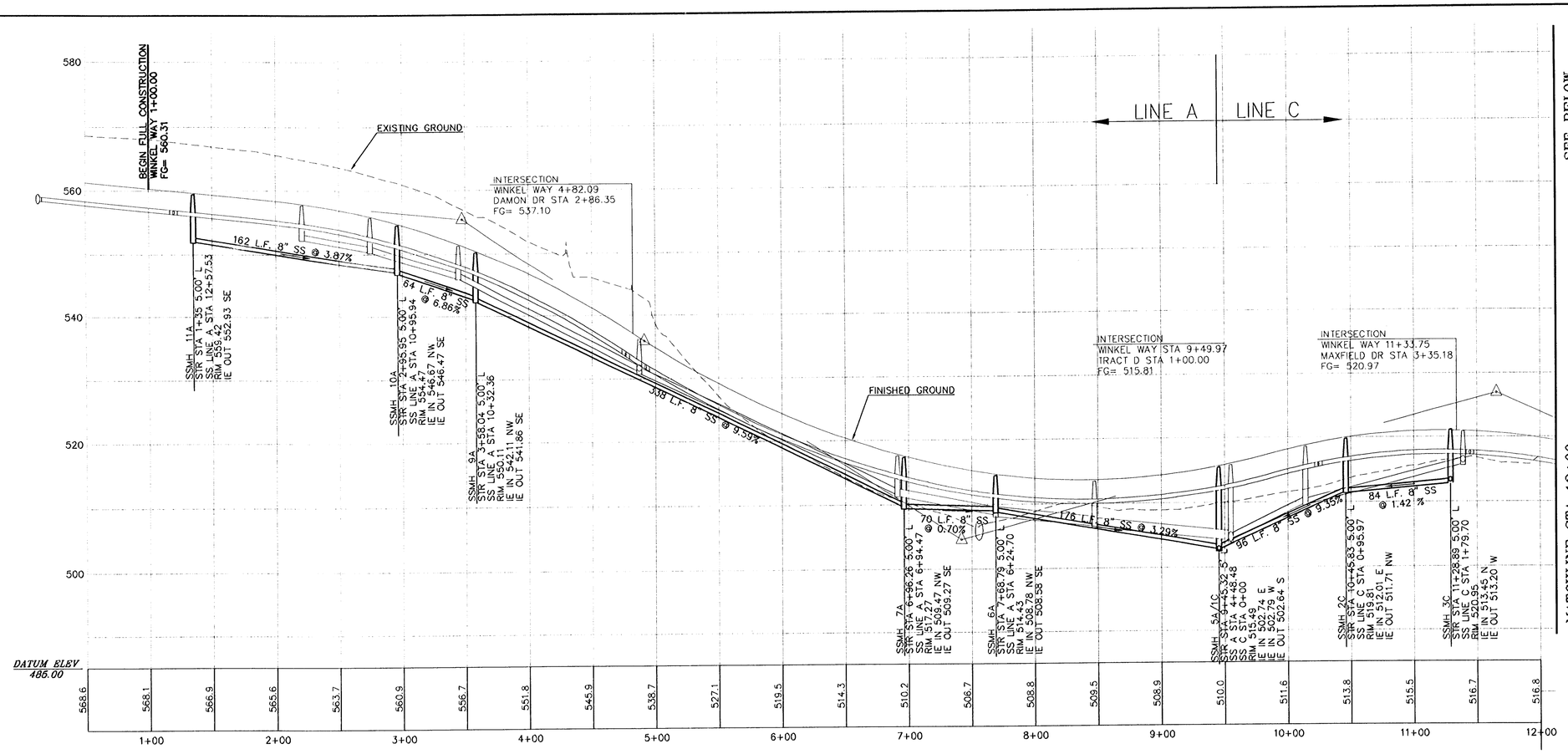

WINKEL WAY/SANITARY LINES A & B & C

1 / C3.1

SCALE: 1"=50' HORZ.
1"=10' VERT.

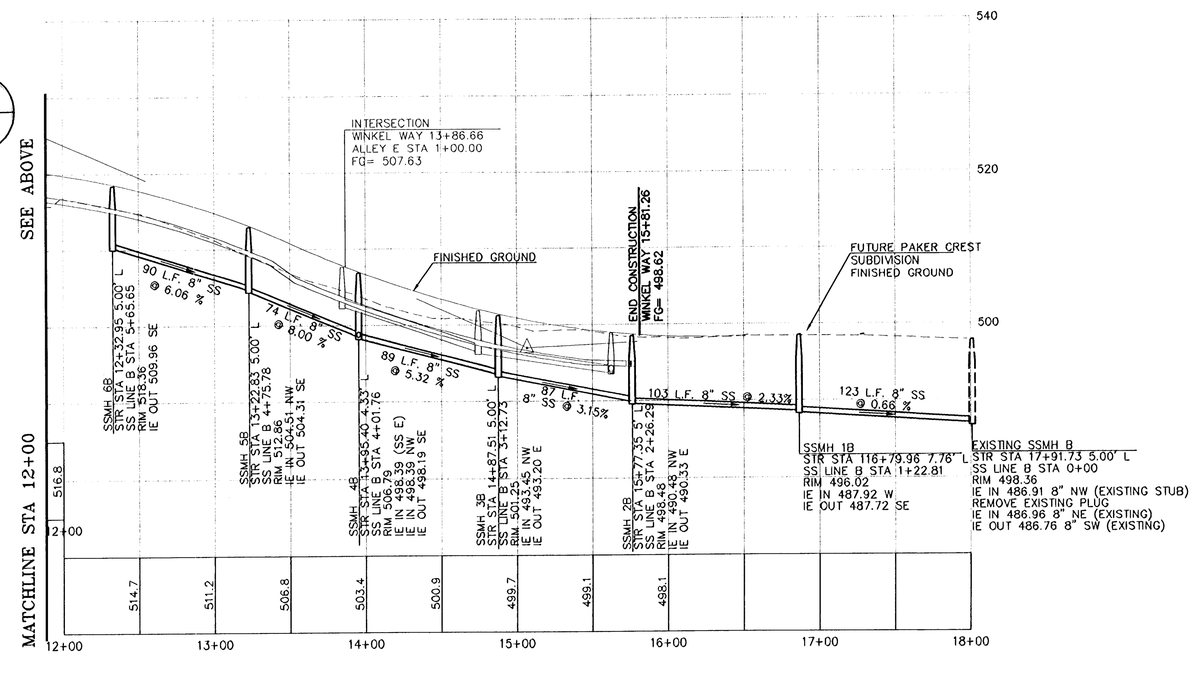

NO.	DATE	BY	REVISION COMMENTS

Design: JML | Drawn: JML | Checked: MFK | Date | Initial Issue Date:

RECORD DRAWING
BY: Larry Evans
DATE: 01/11/07

Permitted design drawings stamped by:
Fares M. Kekhia
Engineer 17447
June 30, 2007

LEGEND HOMES — HOME BUILDER

MATRIX DEVELOPMENT CORPORATION — DEVELOPER

"AS BUILT DRAWING"
DATE 1/11/07 BY

MAXFIELD SUBDIVISION

WEST LINN, OR
SANITARY SEWER PROFILE
WINKEL WAY STA: 1+00 – 18+00

AS-BUILT PLAN SUBMITTAL – JANUARY 11, 2007

otak Incorporated
17355 SW Boones Ferry Rd.
Lake Oswego, Oregon 97035
Phone: (503) 635-3618
FAX: (503) 635-5395
Internet: WWW.Otak.COM

13227 D227C3.1
Project No. Drawing No.

C3.1
Sheet No.

Copyright 2006 ©

XREF LIST
Ltscale: 1
Resolved
D227X001
MFKSTAMP
D227X900
LKO: LISAB 01/11/2007 3:36pm --> R:\DWG\D227C3.1.DWG

XREF LIST
Ltscale: 50
Resolved
D227X001
MFKSTAMP
D227X900

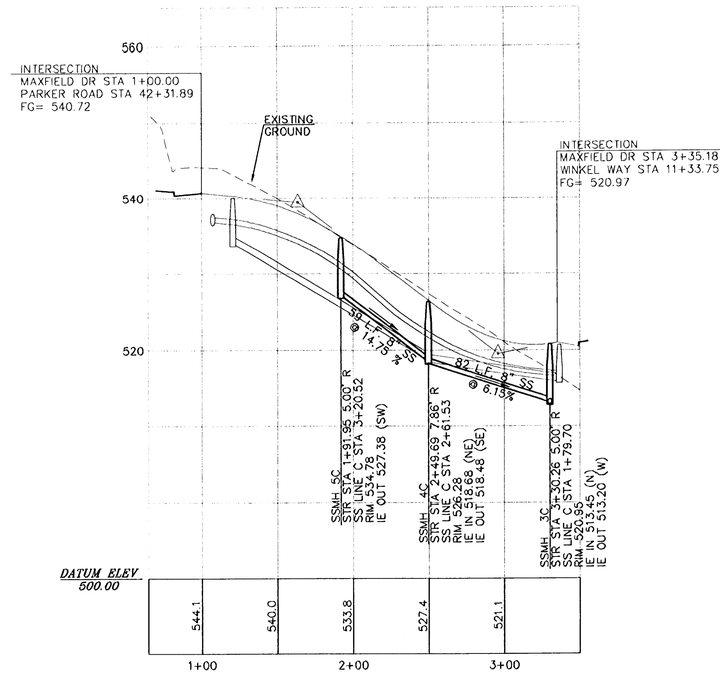

MAXFIELD DR./SANITARY LINE C

3 / C3.2

SCALE: 1"=50' HORZ.
1"=10' VERT.

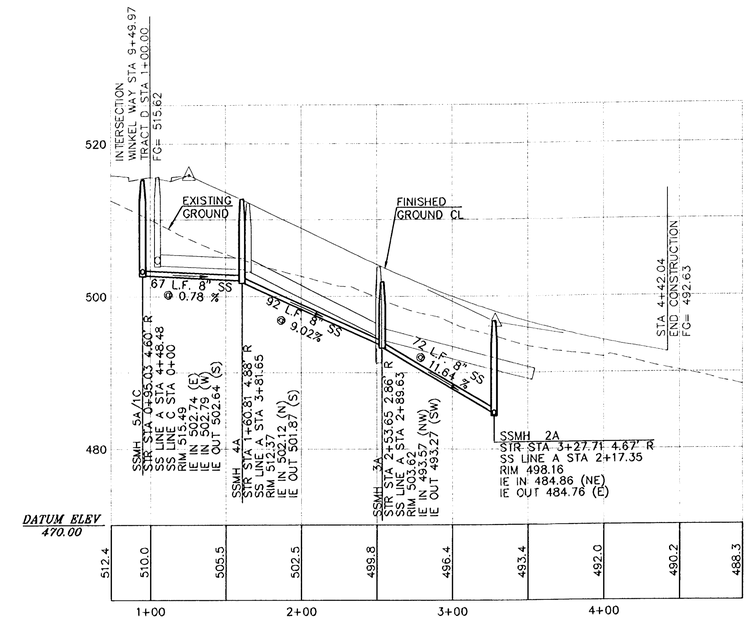

TRACT D/SANITARY LINE A

4 / C3.2

SCALE: 1"=50' HORZ.
1"=10' VERT.

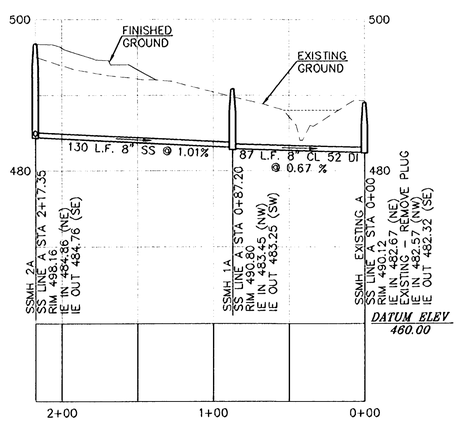

SANITARY LINE A - OFFSITE

4 / C3.2

SCALE: 1"=50' HORZ.
1"=10' VERT.

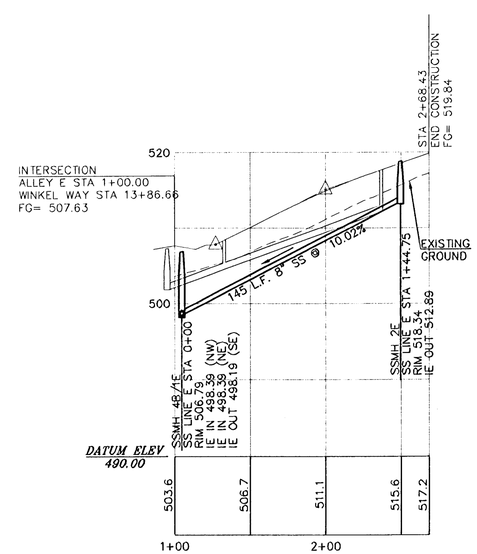

ALLEY E/SANITARY LINE E

4 / C3.2

SCALE: 1"=50' HORZ.
1"=10' VERT.

NO.	DATE	BY	REVISION COMMENTS

Design	Drawn	Checked	Date	Initial Issue Date:
JML	JML	MFK		

RECORD DRAWING
BY
DATE: 01/11/07

Permitted design drawings stamped by:
Fares M. Kekhia
Engineer 17447
June 30, 2007

LEGEND HOMES
HOME BUILDER

MATRIX DEVELOPMENT
DEVELOPER

"AS BUILT DRAWING"
DATE 1/11/07 BY

MAXFIELD SUBDIVISION

WEST LINN, OR
SANITARY SEWER PROFILE
DAMON DRIVE, MAXFIELD DRIVE, TRACT D
& ALLEY E

AS-BUILT PLAN SUBMITTAL - JANUARY 11, 2007

otak Incorporated
17355 SW Boones Ferry Rd.
Lake Oswego, Oregon 97035
Phone: (503) 635-3818
FAX: (503) 635-5395
Internet: WWW.Otak.COM

13227 D227C3.2
Project No. Drawing No.
C3.2
Sheet No.

Copyright 2005 ©

LKO: LS48 01/11/2007 3:39pm --> R:\DWG\D227C3.2.DWG

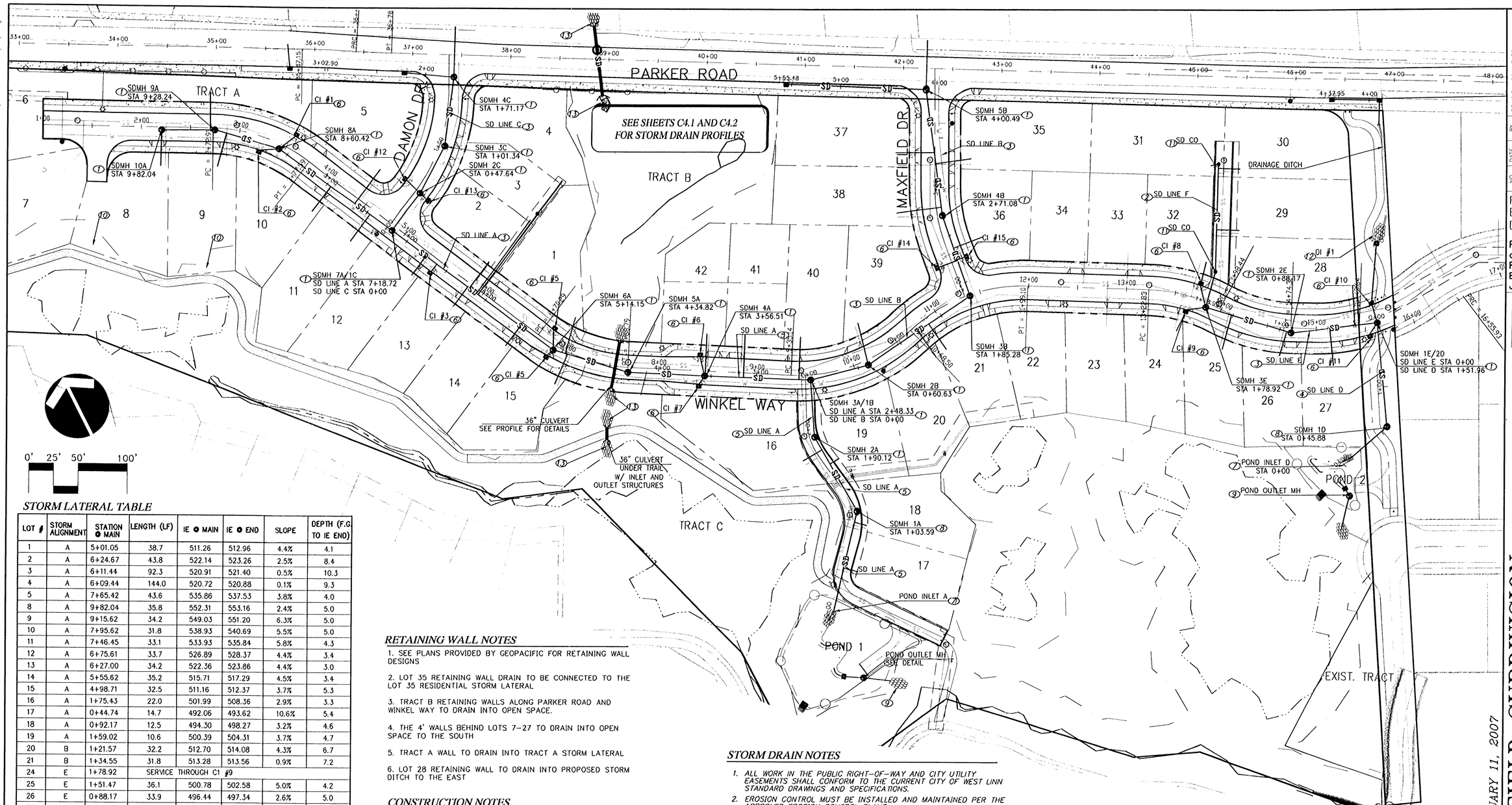

STORM LATERAL TABLE

LOT #	STORM ALIGNMENT	STATION @ MAIN	LENGTH (LF)	IE @ MAIN	IE @ END	SLOPE	DEPTH (F.G. TO IE END)
1	A	5+01.05	38.7	511.26	512.96	4.4%	4.1
2	A	6+24.67	43.8	522.14	523.26	2.5%	8.4
3	A	6+11.44	92.3	520.91	521.40	0.5%	10.3
4	A	6+09.44	144.0	520.72	520.88	0.1%	9.3
5	A	7+65.42	43.6	535.86	537.53	3.8%	4.0
8	A	9+82.04	35.8	552.31	553.16	2.4%	5.0
9	A	9+15.62	34.2	549.03	551.20	6.3%	5.0
10	A	7+95.62	31.8	538.93	540.69	5.5%	5.0
11	A	7+46.45	33.1	533.93	535.84	5.8%	4.3
12	A	6+75.61	33.7	526.89	528.37	4.4%	3.4
13	A	6+27.00	34.2	522.36	523.86	4.4%	3.0
14	A	5+55.62	35.2	515.71	517.29	4.5%	3.4
15	A	4+98.71	32.5	511.16	512.37	3.7%	5.3
16	A	1+75.43	22.0	501.99	508.36	2.9%	3.3
17	A	0+44.74	14.7	492.06	493.62	10.6%	5.4
18	A	0+92.17	12.5	494.30	498.27	3.2%	4.6
19	A	1+59.02	10.6	500.39	504.31	3.7%	4.7
20	B	1+21.57	32.2	512.70	514.08	4.3%	6.7
21	B	1+34.55	31.8	513.28	513.56	0.9%	7.2
24	E	1+78.92	SERVICE THROUGH C1 #9				
25	E	1+51.47	36.1	500.78	502.58	5.0%	4.2
26	E	0+88.17	33.9	496.44	497.34	2.6%	5.0
27	E	0+42.43	37.6	495.07	496.65	4.2%	3.4
28	E	0+22.75	40.6	494.40	494.80	1.0%	8.3
29	E	2+58.80	22.6	508.53	509.86	5.9%	2.6
30	E	3+20.80	21.8	512.88	515.83	13.5%	2.3
31	E	3+24.84	7.9	513.17	515.67	31.8%	2.3
32	E	1+78.92	SERVICE THROUGH CI #8				
35	B	3+24.42	36.0	525.02	528.07	8.5%	8.0
36	B	2+36.64	31.4	517.57	518.95	4.4%	3.0
37	B	3+35.79	39.0	526.31	528.96	6.8%	7.5
38	B	2+79.64	45.5	519.96	522.88	6.4%	5.1
39	B	0+60.63	44.0	509.91	512.78	6.5%	6.0
40	A	2+60.27	42.7	504.73	510.40	13.3%	5.2
41	A	3+16.93	42.6	505.97	508.79	6.6%	5.9
42	A	3+55.81	42.4	506.82	510.09	7.7%	4.2
TR A	A	SERVICE THROUGH CI #1					

RETAINING WALL NOTES

1. SEE PLANS PROVIDED BY GEOPACIFIC FOR RETAINING WALL DESIGNS
2. LOT 35 RETAINING WALL DRAIN TO BE CONNECTED TO THE LOT 35 RESIDENTIAL STORM LATERAL
3. TRACT B RETAINING WALLS ALONG PARKER ROAD AND WINKEL WAY TO DRAIN INTO OPEN SPACE.
4. THE 4' WALLS BEHIND LOTS 7-27 TO DRAIN INTO OPEN SPACE TO THE SOUTH
5. TRACT A WALL TO DRAIN INTO TRACT A STORM LATERAL
6. LOT 28 RETAINING WALL TO DRAIN INTO PROPOSED STORM DITCH TO THE EAST

CONSTRUCTION NOTES

1. CONSTRUCT STORM DRAIN MANHOLE PER CITY OF WEST LINN DETAIL WL-207
2. CONSTRUCT 10" RIBBED PVC STORM MAIN PER PROFILES ON SHEETS C4.1 AND C4.2 AND WEST LINN STANDARDS
3. CONSTRUCT 12" RIBBED PVC STORM MAIN PER PROFILES ON SHEETS C4.1 AND C4.2 AND WEST LINN STANDARDS
4. CONSTRUCT 15" RIBBED PVC STORM MAIN PER PROFILES ON SHEETS C4.1 AND C4.2 AND WEST LINN STANDARDS
5. CONSTRUCT 18" RIBBED PVC STORM MAIN PER PROFILES ON SHEETS C4.1 AND C4.2 AND WEST LINN STANDARDS
6. CONSTRUCT COMBINATION CURB INLET PER CITY OF WEST LINN DETAIL WL-601
7. CONSTRUCT OUTLET HEADWALL PER CITY OF WEST LINN DETAIL WL-613
8. CONSTRUCT POLLUTION CONTROL MANHOLE PER CITY OF WEST LINN DETAIL WL-607
9. CONSTRUCT DETENTION POND OUTLET PER CITY OF WEST LINN DETAIL WL-607
10. HOMEBUILDER TO CONSTRUCT SOAKAGE TRENCH WITH CITY WEST LINN BUILDING DEPARTMENT APPROVAL
11. CONSTRUCT 10" STORM CLEANOUT FOR JOINT SERVICE LINE PER CITY OF WEST LINN DETAIL WL-206
12. CONSTRUCT STANDARD DITCH INLET PER CITY OF WEST LINN DETAIL WL-603 CONNECT DITCH INLET TO CURB INLET #10 WITH 10" RIBBED PVC
13. CONSTRUCT STORM SEWER OUTFALL PER CITY OF WEST LINN STANDARD WL-614

STORM DRAIN NOTES

1. ALL WORK IN THE PUBLIC RIGHT-OF-WAY AND CITY UTILITY EASEMENTS SHALL CONFORM TO THE CURRENT CITY OF WEST LINN STANDARD DRAWINGS AND SPECIFICATIONS.
2. EROSION CONTROL MUST BE INSTALLED AND MAINTAINED PER THE APPROVED EROSION CONTROL PLANS.
3. ONCE CURB INLET IS INSTALLED, SILT SAK INSERT SHOULD BE INSTALLED AT ONCE.
4. CONSTRUCT DESIGNATED SIZE STORM DRAIN PER CITY OF WEST LINN STANDARDS. USE CLASS B BACKFILL, OR AS DESIGNATED ON PROFILE.
5. MANHOLE RIM ELEVATIONS SHOWN ARE APPROXIMATE AND FOR INFORMATION ONLY. FINAL ELEVATIONS SHALL BE SET TO MATCH CONSTRUCTED FINISH GRADE.
6. LOTS 22,23,33,34 TO BE SERVED BY A 3" WEEPHOLE THROUGH THE CURB ON THE LOW SIDE OF THE LOT, (SEE DETAIL WL-501).
7. LOTS 6-9 TO BE SERVED BY SOAKAGE TRENCH
8. SEE SHEETS C4.3 AND C4.4 FOR POND CONTROL STRUCTURE DETAILS.

CURB INLET TABLE

CI/CB #	STREET	STR. STA.	OFFSET TO F.O.C.	T.O.C. ELEV.	I.E. OUT	PIPE DIA.	PIPE LENGTH	PIPE SLOPE
1	WINKEL	3+53.09	14.00 L	550.79	546.26	10"	21 LF	0.0243
2	WINKEL	3+25.25	14.00 R	552.78	548.24	10"	20 LF	0.1370
3	WINKEL	5+43.88	14.00 R	529.73	525.92	10"	9 LF	0.0668
4	WINKEL	6+88.55	12.70 R	517.86	513.22	10"	8 LF	0.1375
5	WINKEL	6+80.40	13.00 L	518.29	513.63	10"	21 LF	0.0957
6	WINKEL	8+41.60	14.00 L	513.72	509.06	10"	20 LF	0.1105
7	WINKEL	8+41.60	14.00 R	513.72	508.01	10"	10 LF	0.1160
8	WINKEL	13+71.63	14.00 L	508.95	504.56	10"	23 LF	0.0817
9	WINKEL	13+65.55	14.00 R	509.38	504.88	10"	20 LF	0.0115
10	WINKEL	15+62.64	14.00 L	498.96	494.09	10"	19 LF	0.0426
11	WINKEL	15+50.70	14.00 R	499.19	494.45	10"	14 LF	0.0836
12	DAMON	2+41.15	14.00 R	538.53	535.02	10"	19 LF	0.0863
13	DAMON	2+45.00	14.00 L	537.77	533.98	10"	9 LF	0.0889
14	MAXFIELD	2+97.60	14.00 R	521.39	517.33	10"	8 LF	0.0618
15	MAXFIELD	2+97.60	14.00 L	521.29	517.12	10"	20 LF	0.0128

*ALL CATCH BASINS TO BE COMBINATION INLETS PER CITY OF WEST LINN DETAIL WL-601

NO.	DATE	BY	REVISION COMMENTS

Design: JWL Drawn: JML Checked: MFK Date: 7.20.5 Initial Issue Date:

RECORD DRAWING
BY: [signature]
DATE: 01/11/07

Permitted design drawings stamped by:
Fares M. Kekhia
Engineer 17447
June 30, 2007

LEGEND HOMES
HOME BUILDER

MATRIX DEVELOPER

"AS BUILT DRAWING"
DATE 1/11/07 BY [signature]

MAXFIELD SUBDIVISION
WEST LINN, OR
STORM DRAIN PLAN

AS-BUILT PLAN SUBMITTAL – JANUARY 11, 2007

otak Incorporated
17355 SW Boones Ferry Rd.
Lake Oswego, Oregon 97035
Phone: (503) 635-3618
FAX: (503) 635-5395
Internet: WWW.Otak.COM

13227 D227C4.0
Project No. Drawing No.
C4.0
Sheet No.

Copyright 2005 ©

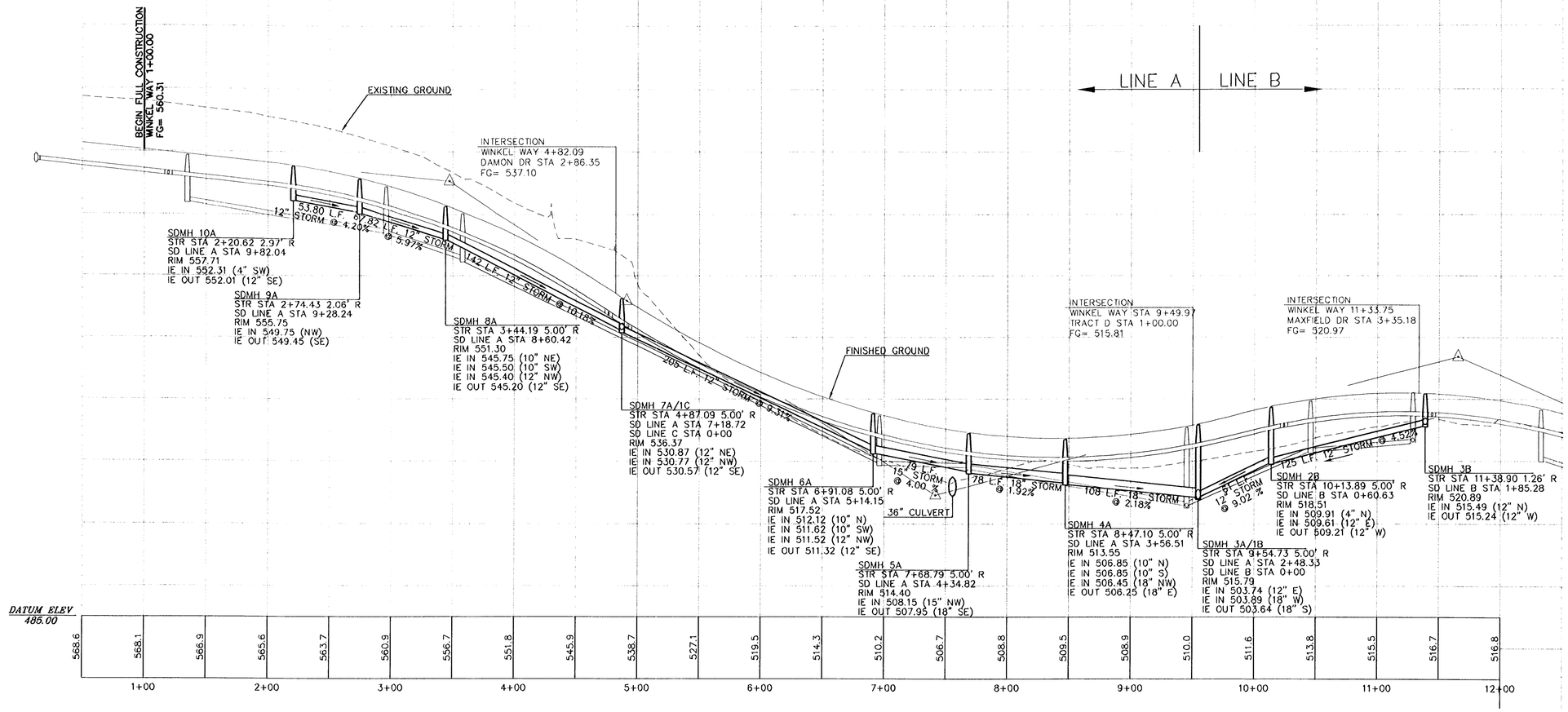

WINKEL WAY/STORM LINES A, B & E

1 / C4.1

SCALE: 1"=50' HORZ.
1"=10' VERT.

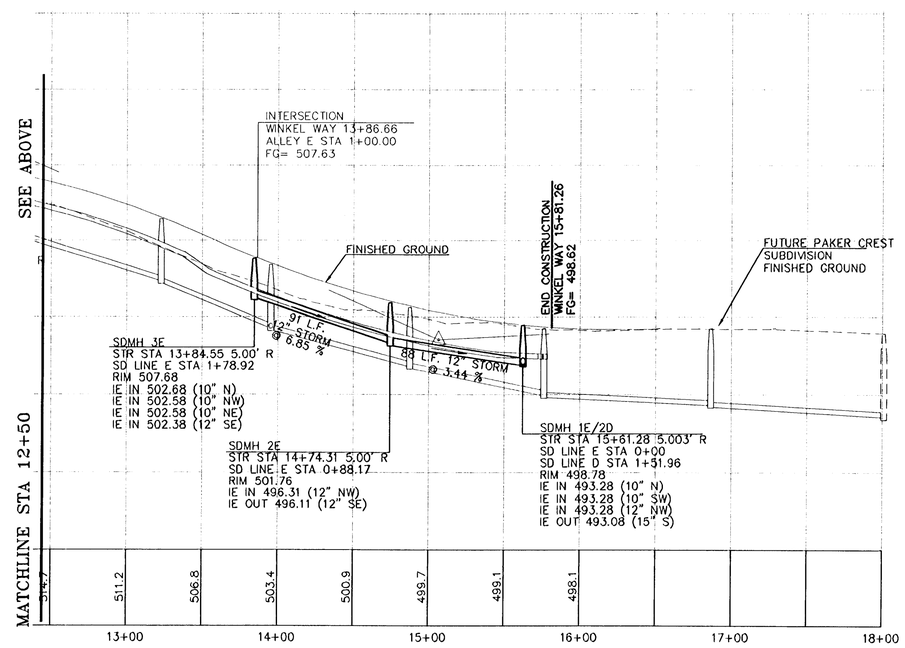

NO.	DATE	BY	REVISION COMMENTS	Date	Initial Issue Date:

Design: JML Drawn: JML Checked: MFK

RECORD DRAWING
BY: Jarvis Stacks
DATE: 01/11/07

Permitted design drawings stamped by:
Fares M. Kekhia
Engineer 17447
June 30, 2007

LEGEND HOMES — HOME BUILDER

MATRIX DEVELOPMENT CORPORATION — DEVELOPER

"AS BUILT DRAWING"
DATE 1/11/07 BY

MAXFIELD SUBDIVISION

WEST LINN, OR
STORM SEWER PROFILE
WINKEL WAY STA: 1+00 – 15+66.12

AS-BUILT PLAN SUBMITTAL – JANUARY 11, 2007

otak Incorporated

17355 SW Boones Ferry Rd.
Lake Oswego, Oregon 97035
Phone: (503) 635-3618
FAX: (503) 635-5395
Internet: WWW.Otak.COM

13227 D227C4.1
Project No. Drawing No.

C4.1
Sheet No.

Copyright 2005 ©

XREF: LIST
Ltscale: 1
Resolved:
D227X001
MFKSTAMP
D227X900
LKO: LISAB 01/11/2007 3:45pm --> R:\DWG\D227C4.1.DWG

XREF LIST
Ltscale: 1
Resolved
D227X001
MFKSTAMP
D227X900

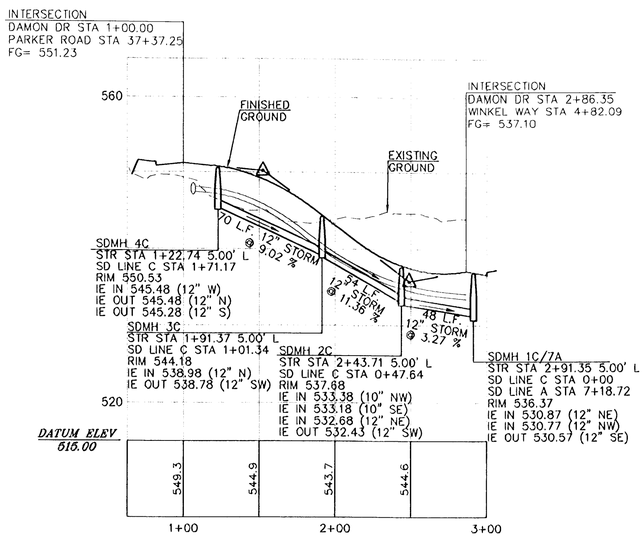

DAMON DRIVE/STORM LINE C

SCALE: 1"=50' HORZ.
1"=10' VERT.

2 / C4.2

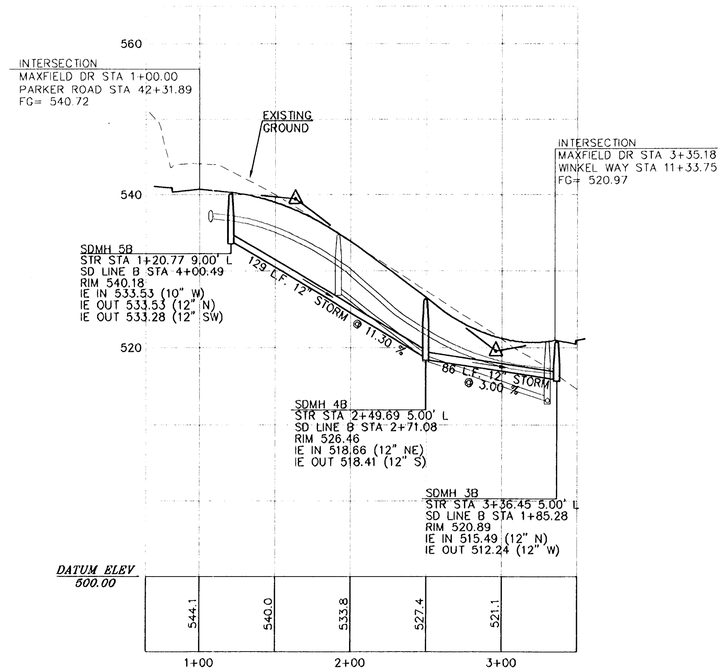

MAXFIELD DRIVE/STORM LINE B

SCALE: 1"=50' HORZ.
1"=10' VERT.

3 / C4.2

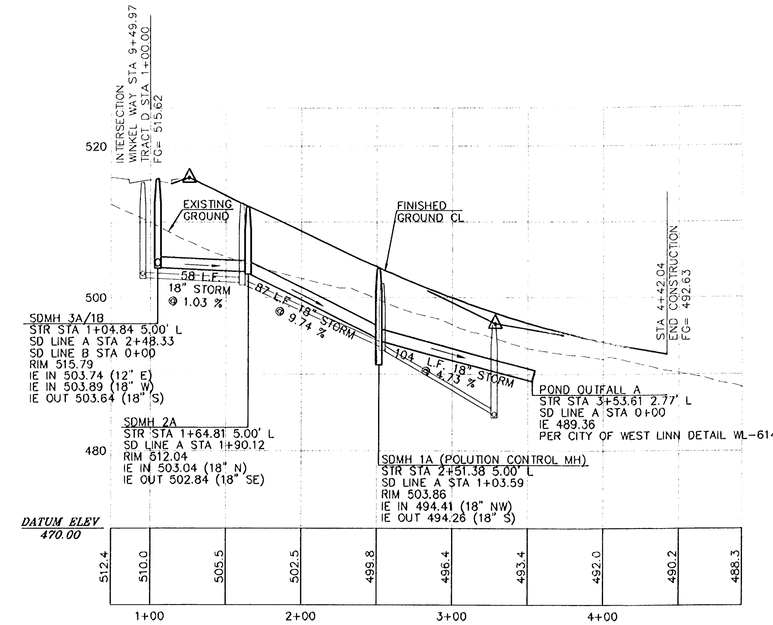

TRACT D/STORM LINE A

SCALE: 1"=50' HORZ.
1"=10' VERT.

4 / C4.2

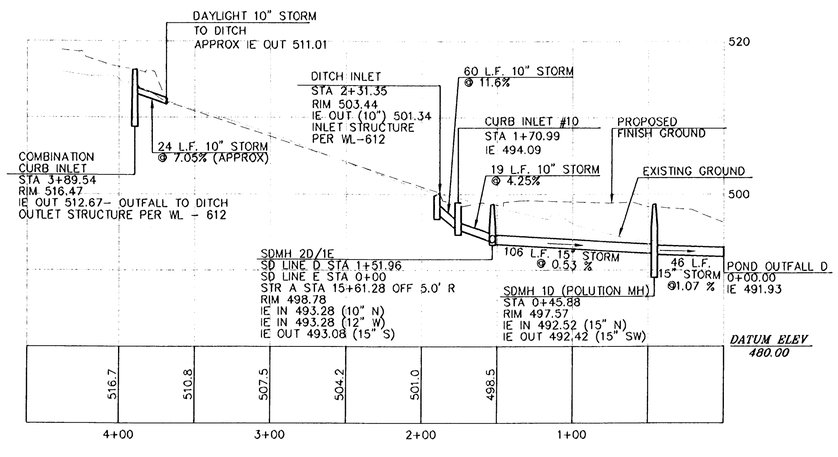

STORM LINE D

SCALE: 1"=50' HORZ.
1"=10' VERT.

5 / C4.2

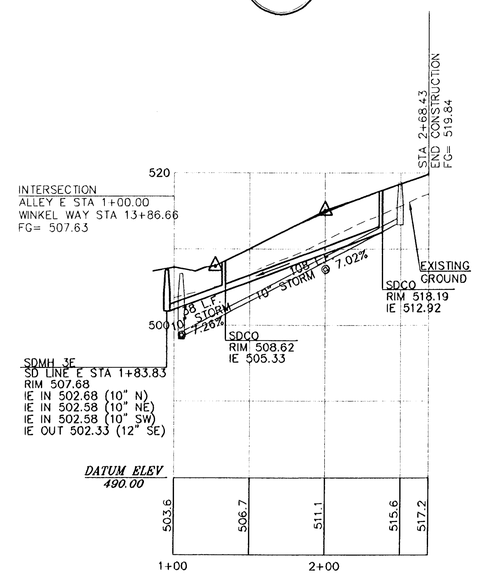

ALLEY E STORM SERVICE

SCALE: 1"=50' HORZ.
1"=10' VERT.

6 / C4.2

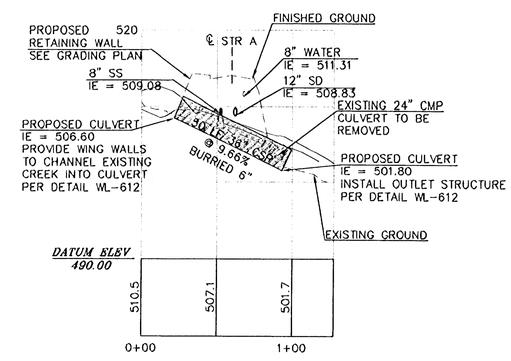

WINKEL WAY CULVERT

SCALE: 1"=50' HORZ.
1"=10' VERT.

7 / C4.2

NO.	DATE	BY	REVISION COMMENTS
Design	Drawn	Checked	Date / Initial Issue Date
	JML	JML	MFK

RECORD DRAWING
BY: Dennis Davis
DATE: 01/11/07

Permitted design drawings stamped by:
Fares M. Kekhia
Engineer 17447
June 30, 2007

LEGEND HOMES — HOME BUILDER

MATRIX DEVELOPMENT — DEVELOPER

"AS BUILT DRAWING"
DATE 1/11/07 BY

MAXFIELD SUBDIVISION

WEST LINN, OR
STORM SEWER PROFILE
DAMON DRIVE, MAXFIELD DRIVE, TRACT D,
STORM LINE D & STREET A CULVERT

AS-BUILT PLAN SUBMITTAL - JANUARY 11, 2007

otak
Incorporated
17355 SW Boones Ferry Rd.
Lake Oswego, Oregon 97035
Phone: (503) 635-3618
FAX: (503) 635-5395
Internet: WWW.Otak.COM

13227 D227C4.2
Project No. Drawing No.
C4.2
Sheet No.

Copyright 2005 ©

LKO: LISAB 01/11/2007 3:47pm --> R:\DWG\D227C4.2.DWG

XREF LIST
Ltscale: 1
Resolved
D227X001
MFKSTAMP
D227X230
D227X400
D227X430
D227X600
D227X900
Unresolved
D227X190
D227X680

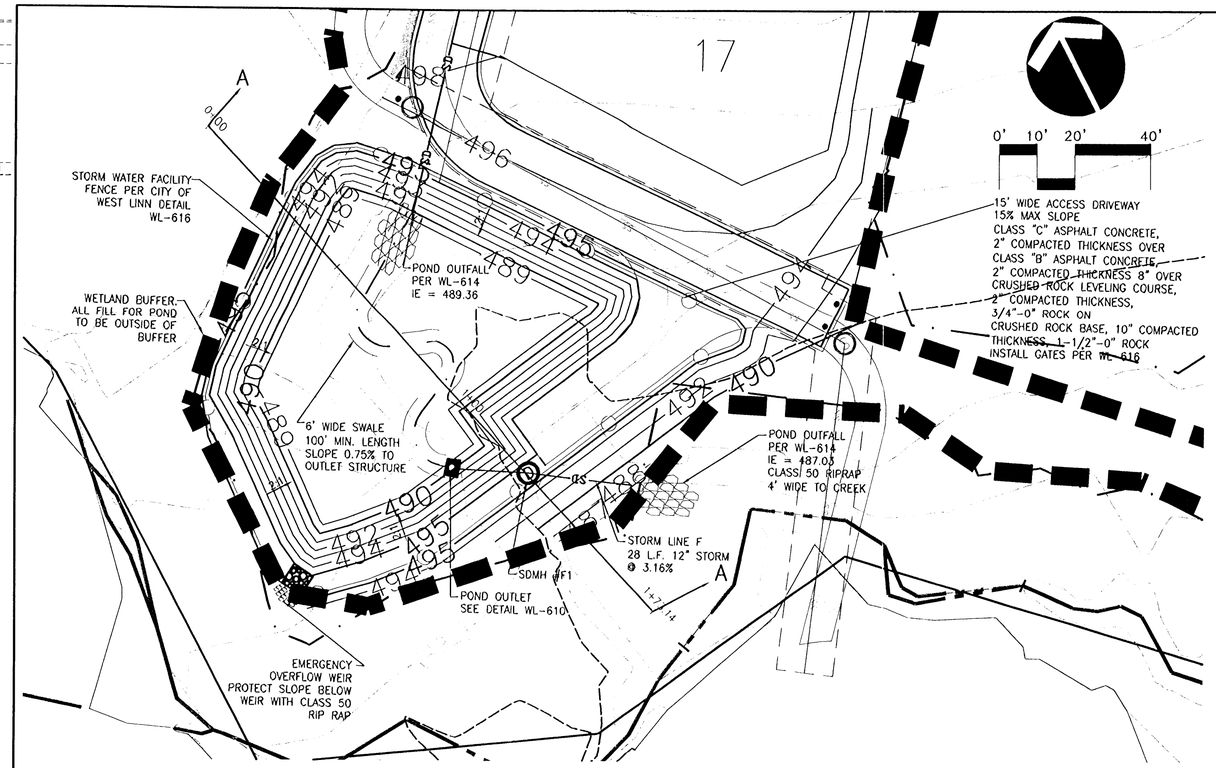

DETENTION POND 1

SCALE: 1"=20' HORZ.

1 / C4.3

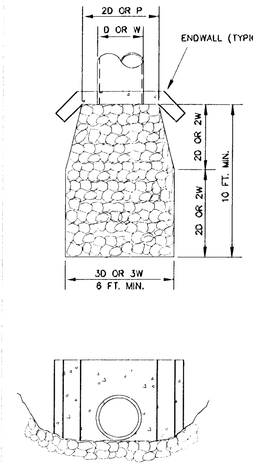

DESIGN VELOCITY FT./SEC	ROCK CLASSIFICATION BY WEIGHT
8 - 10	200 LBS.
10 - 12	1/4 TON
12 - 14	1/2 TON
14 - 16	1 TON
16 - 18	2 TON

SELECTION OF RIP RAP (SEE NOTE 1)

NOTES:
1. DIMENSIONS FOR RIP RAP APPLY TO FLOWS < 2 CFS RIP RAP FOR FLOWS > 2 CFS MUST BE DESIGNED BY AN ENGINEER FLOWS > 20 FPS SHALL USE ENERGY DISSIPATOR
2. TYPE OF RIP RAP
   A. REGULAR QUARRY STONE CLASS 50-200
   B. COBBLESTONE
   C. CONCRETE (ONLY ALLOWED UPON APPROVAL OF THE DISTRICT)
3. PLACEMENT
   A. MINIMUM DEPTH = 1 1/2 TIMES AVERAGE STONE SIZE
   B. ROCKS SHALL BE PLACED TO PROVIDE A MINIMUM OF VOIDS.
   C. SURFACE ROCKS OR CONCRETE SHALL PROTRUDE AT LEAST 1/2 THEIR VERTICAL DIMENSION.
   D. RIP RAP IS TO BE PLACED OVER A NATURAL BEDDING, OR IT MAY BE GROUTED OR PLACED OVER A GRAVEL BEDDING AS REQUIRED BY THE CITY.

Storm Sewer Outfall

West Linn
DATE: JAN 2000
DRAWING NO. WL-614
FILE NO. 00-614

NOTES:
1. NEOPRENE RUBBER GASKET REQUIRED BETWEEN GATE FLANGE AND CONCRETE CATCH BASIN.
2. CLEANOUT/SHEAR GATE TO HAVE LIFT HANDLE (SEE WL-611) ATTACHED WITH GALVANIZED CHAIN TO TOP OF CATCH BASIN.
3. FLANGE MOUNTING BOLTS SHALL BE 3/8" DIA STAINLESS STEEL.

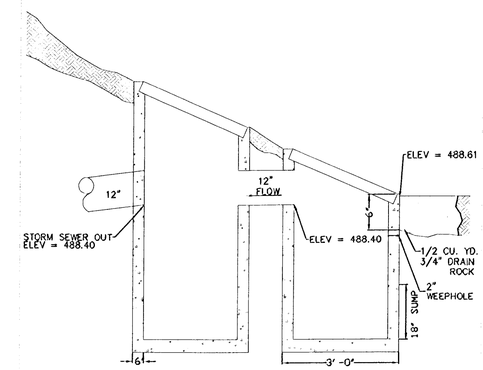

Standard Detention Pond Outlet

West Linn
DATE: JAN 2000
DRAWING NO. WL-610
FILE NO. 00-610

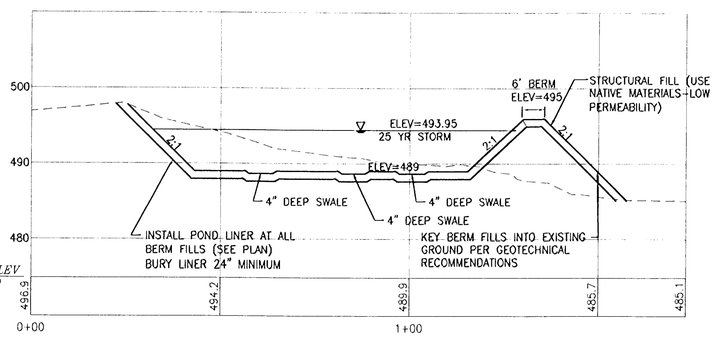

SECTION A-A

SCALE: 1"=20' HORZ. 1"=10' VERT.

4 / C4.3

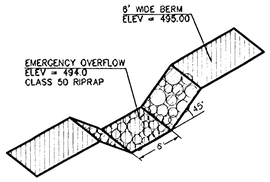

EMERGENCY OVERFLOW WEIR

SCALE: N.T.S.

3 / C4.3

STORM POND NOTES

1. SEE PLANTING DETAILS FOR POND AND SWALE ON SHEET L1.2
2. PROVIDE FENCE WITH ACCESS GATE AT DRIVEWAY PER CITY OF WEST LINN DETAIL WL-616
3. PROVIDE STORM WATER FACILITY SIGN PER CITY OF WEST LINN DETAIL WL-615

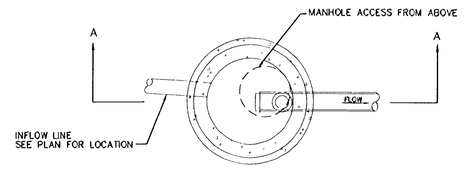

PLAN

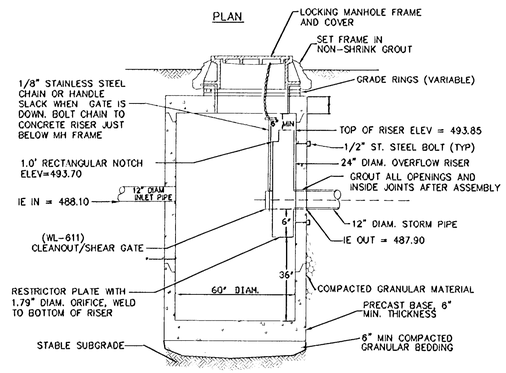

SECTION A-A

NOTES:
1. ALL PRECAST SECTIONS SHALL CONFORM TO THE REQUIREMENTS OF ASTM C-478.
2. DISTANCE FROM TOP OF OVERFLOW TO MH RIM SHALL BE BASED ON OVERFLOW CAPACITY CALC'S BY DESIGN ENGINEER. ASSUME ORIFICE CONTROL.
3. 72" MINIMUM DIA. MANHOLE REQUIRED FOR OUTLET OR INLET > 21".
4. NO STEPS REQUIRED

FLOW CONTROL STRUCTURE - POND 1

OUTLET STRUCTURE - SDMH #F1

SCALE: NTS

6 / C4.3

AS-BUILT NOTE

FINAL GRADES APPEAR CONSISTENT WITH DESIGN GRADES. NO AS-BUILT SURVEY WAS PERFORMED TO VERIFY GRADES.

NO.	DATE	BY	REVISION COMMENTS
Design	Drawn	Checked	Date Initial Issue Date
JML	JML	MFK	7.20.3

RECORD DRAWING
BY: [signature]
DATE: 01/11/07

Permitted design drawings stamped by:
Fares M. Kekhia
Engineer 17447
June 30, 2007

LEGEND HOMES — HOME BUILDER
MATRIX DEVELOPER
"AS BUILT DRAWING" DATE 1/11/07 BY [signature]

MAXFIELD SUBDIVISION
WEST LINN, OR
STORM WATER DETENTION FACILITY
POND 1

AS-BUILT PLAN SUBMITTAL - JANUARY 11, 2007

otak Incorporated
17355 SW Boones Ferry Rd.
Lake Oswego, Oregon 97035
Phone: (503) 635-3618
FAX: (503) 635-5395
Internet: WWW.Otak.COM

Project No. 13227 Drawing No. D227C4.3
Sheet No. C4.3

Copyright 2005 ©

LKO: LISAB 01/11/2007 3:48pm --> R:\DWG\D227C4.3.DWG

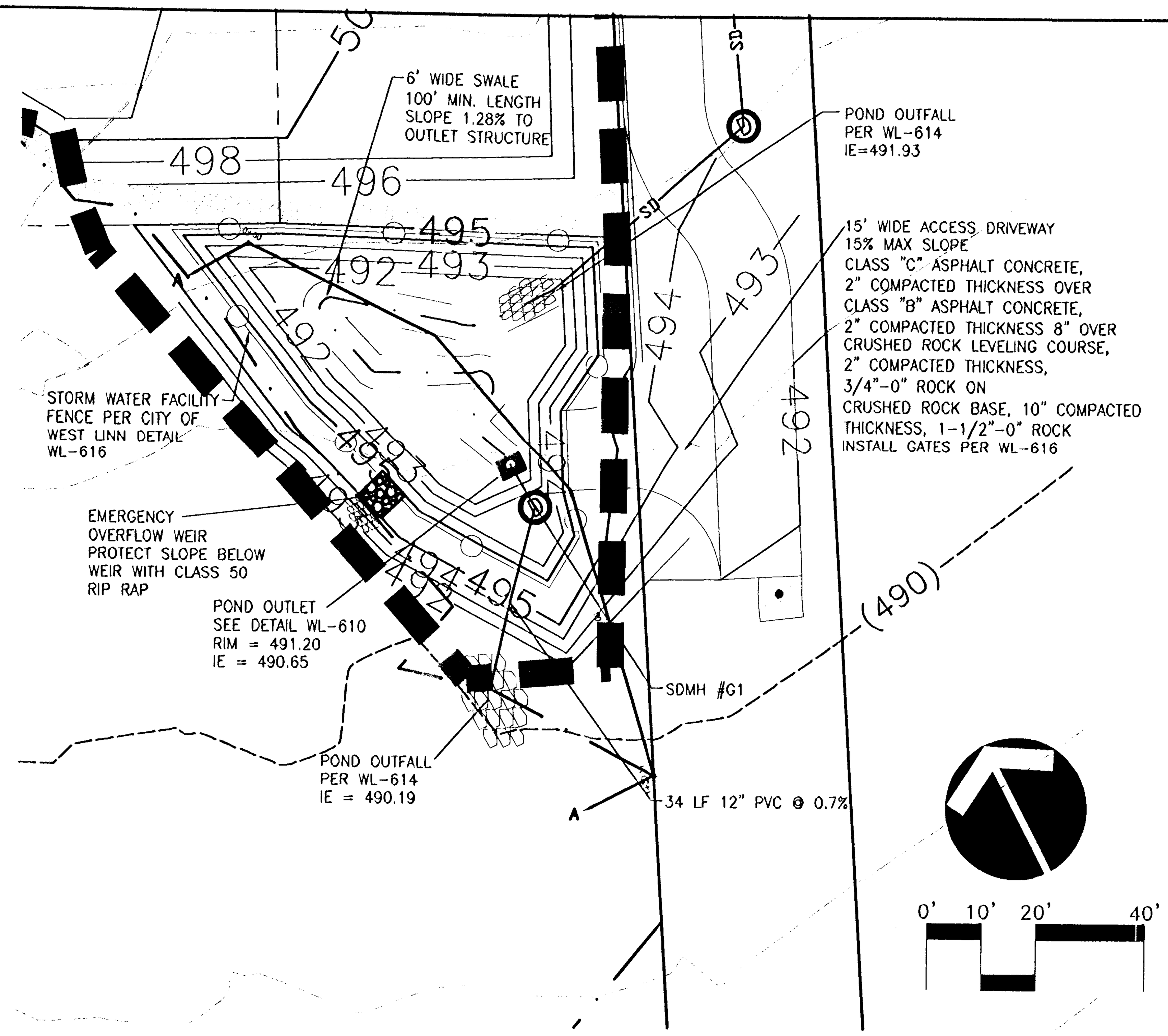

DETENTION POND 2

1 / C4.4

SCALE: 1"=20' HORZ.

STORM POND NOTES

1. SEE PLANTING DETAILS FOR POND AND SWALE ON SHEET L1.2
2. PROVIDE FENCE WITH ACCESS GATE AT DRIVEWAY PER CITY OF WEST LINN DETAIL WL-616
3. PROVIDE STORM WATER FACILITY SIGN PER CITY OF WEST LINN DETAIL WL-615

NOTES:
1. NEOPRENE RUBBER GASKET REQUIRED BETWEEN GATE FLANGE AND CONCRETE CATCH BASIN.
2. CLEANOUT/SHEAR GATE TO HAVE LIFT HANDLE (SEE WL-611) ATTACHED WITH GALVANIZED CHAIN TO TOP OF CATCH BASIN.
3. FLANGE MOUNTING BOLTS SHALL BE 3/8" DIA STAINLESS STEEL.

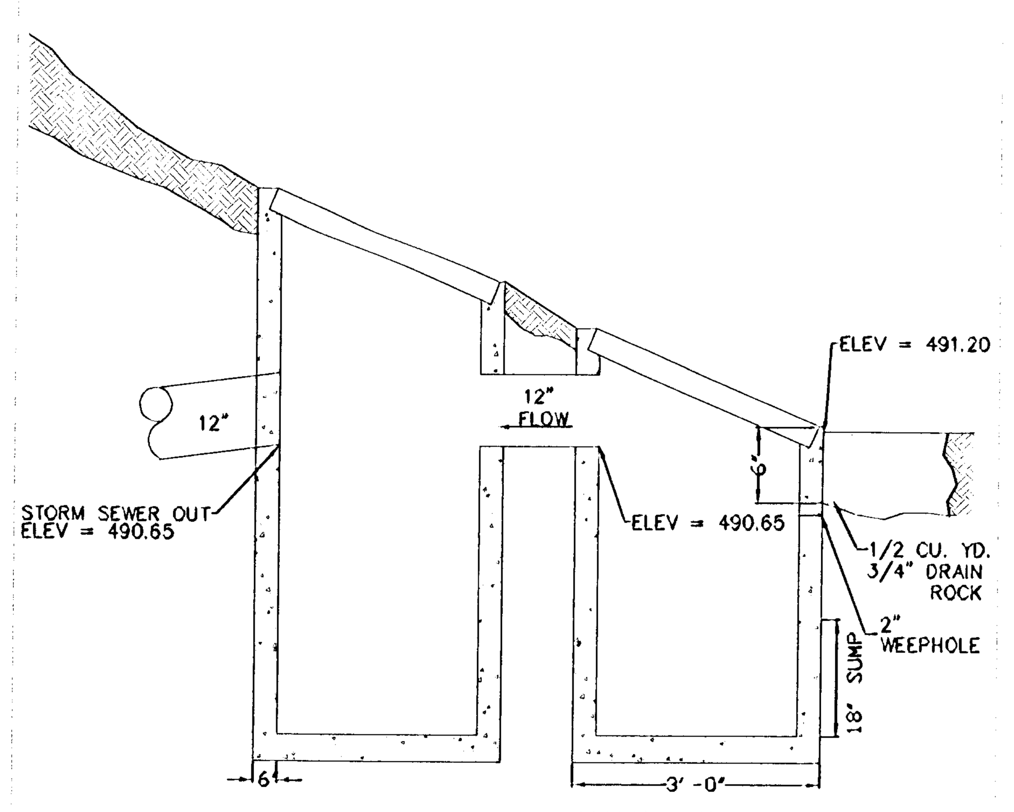

Standard Detention Pond Outlet

West Linn — DATE: JAN 2000 — DRAWING NO. WL-610 — FILE NO. 00-610

D = PIPE DIAMETER
W = BOTTOM WIDTH OF CHANNEL
P = WETTED PERIMETER OF CHANNEL

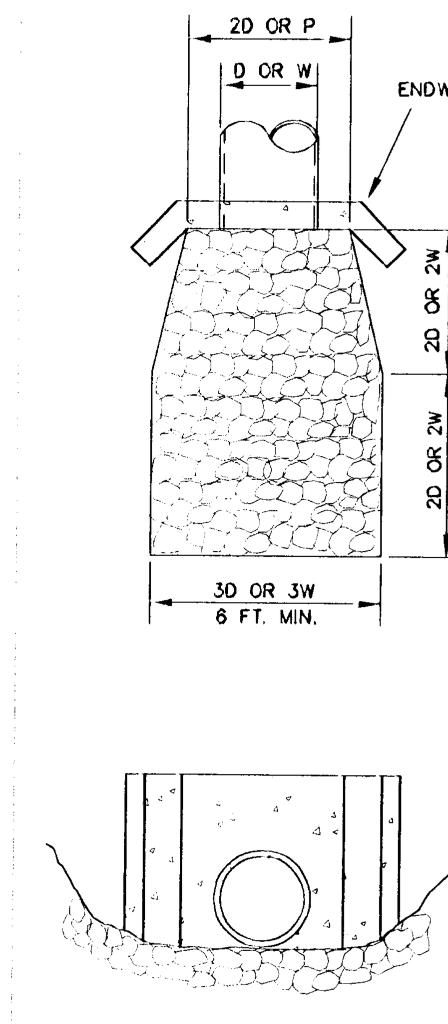

DESIGN VELOCITY FT./SEC	ROCK CLASSIFICATION BY WEIGHT
6 - 10	200 LBS.
10 - 12	1/4 TON
12 - 14	1/2 TON
14 - 16	1 TON
16 - 18	2 TON

SELECTION OF RIP RAP (SEE NOTE 1)

NOTES:
1. DIMENSIONS FOR RIP RAP APPLY TO FLOWS < 2 CFS RIP RAP FOR FLOWS > 2 CFS MUST BE DESIGNED BY AN ENGINEER FLOWS > 20 FPS SHALL USE ENERGY DISSIPATOR
2. TYPE OF RIP RAP
   A. REGULAR QUARRY STONE CLASS 50-200
   B. COBBLESTONE
   C. CONCRETE (ONLY ALLOWED UPON APPROVAL OF THE DISTRICT)
3. PLACEMENT
   A. MINIMUM DEPTH = 1 1/2 TIMES AVERAGE STONE SIZE
   B. ROCKS SHALL BE PLACED TO PROVIDE A MINIMUM OF VOIDS.
   C. SURFACE ROCKS OR CONCRETE SHALL PROTRUDE AT LEAST 1/2 THEIR VERTICAL DIMENSION.
   D. RIP RAP IS TO BE PLACED OVER A NATURAL BEDDING, OR IT MAY BE GROUTED OR PLACED OVER A GRAVEL BEDDING AS REQUIRED BY THE CITY.

Storm Sewer Outfall

West Linn — DATE: JAN 2000 — DRAWING NO. WL-614 — FILE NO. 00-614

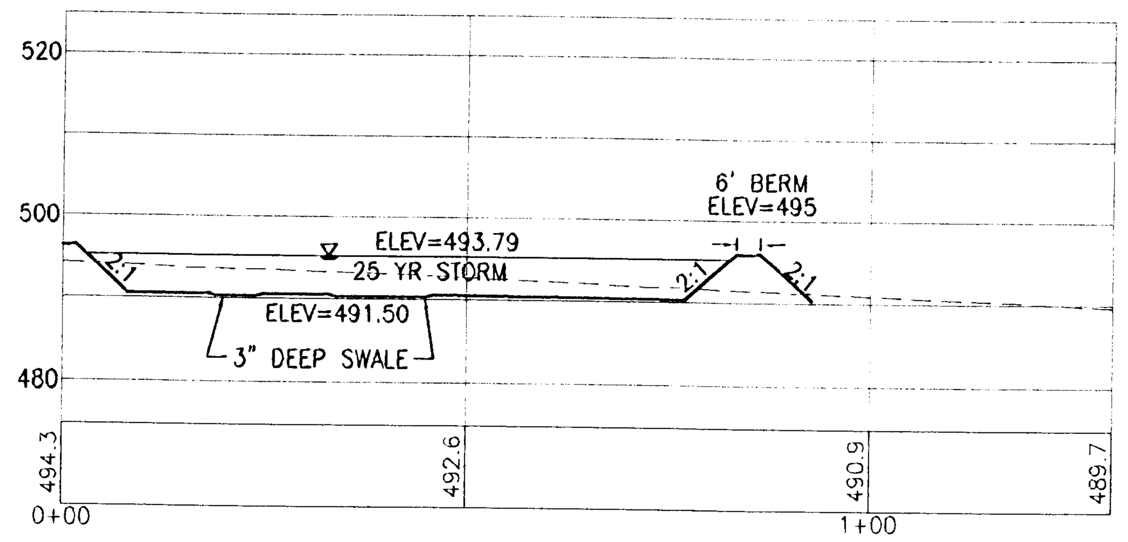

SECTION A-A

4 / C4.4

SCALE: 1"=20' HORZ. 1"=10' VERT.

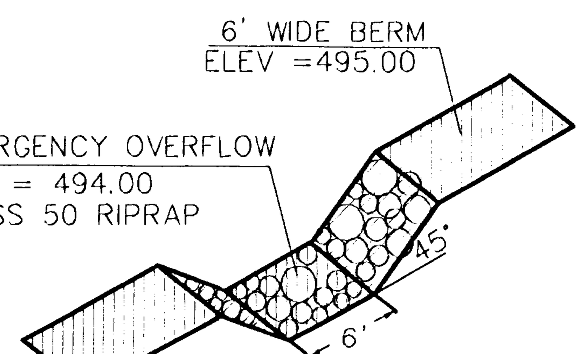

EMERGENCY OVERFLOW WEIR

3 / C4.5

SCALE: NTS

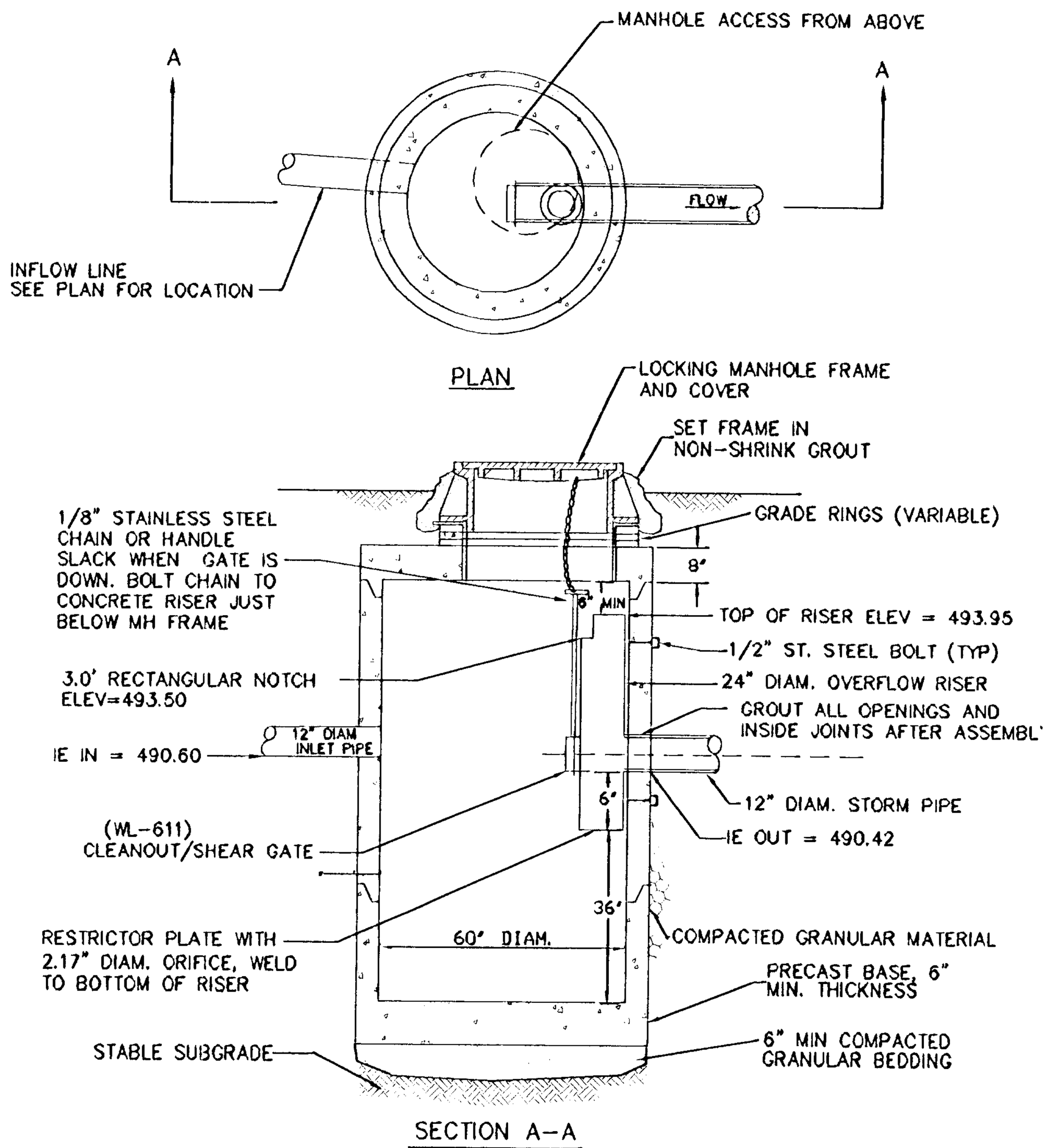

NOTES:
1. ALL PRECAST SECTIONS SHALL CONFORM TO THE REQUIREMENTS OF ASTM C-478.
2. DISTANCE FROM TOP OF OVERFLOW TO MH RIM SHALL BE BASED ON OVERFLOW CAPACITY CALC'S BY DESIGN ENGINEER. ASSUME ORIFICE CONTROL.
3. 72" MINIMUM DIA. MANHOLE REQUIRED FOR OUTLET OR INLET > 21".
4. NO STEPS REQUIRED

FLOW CONTROL STRUCTURE - POND 2

OUTLET STRUCTURE - SDMH #G1

6 / C4.4

SCALE: NTS

AS-BUILT NOTE

FINAL GRADES APPEAR CONSISTENT WITH DESIGN GRADES. NO AS-BUILT SURVEY WAS PERFORMED TO VERIFY GRADES.

AS-BUILT PLAN SUBMITTAL - JANUARY 11, 2007

MAXFIELD SUBDIVISION

WEST LINN, OR
STORM WATER DETENTION FACILITY
POND 2

RECORD DRAWING
BY: [signature]
DATE: 01/11/17

Permitted design drawings stamped by: Fares M. Kekhia Engineer 17447 June 30, 2007

LEGEND HOMES — HOME BUILDER

MATRIX — DEVELOPER

"AS BUILT DRAWING" DATE 1/11/07 BY [signature]

NO.	DATE	BY	REVISION COMMENTS

Design	Drawn	Checked	Date	Initial Issue Date
JML	JML	MFK	7.20.5	

otak Incorporated
17355 SW Boones Ferry Rd.
Lake Oswego, Oregon 97035
Phone: (503) 635-3618
FAX: (503) 635-5395
Internet: WWW.Otak.COM

13227 D227C4.4
Project No. Drawing No.

C4.4
Sheet No.

Copyright 2005 ©

XREF LIST
Ltscale: 1
Resolved
D227X001
MFKSTAMP
D227X230
D227X400
D227X430
D227X600
D227X680

XREF LIST
Ltscale: 50
Resolved
D227X001
MFKSTAMP
D227X230
D227X600
D227X680

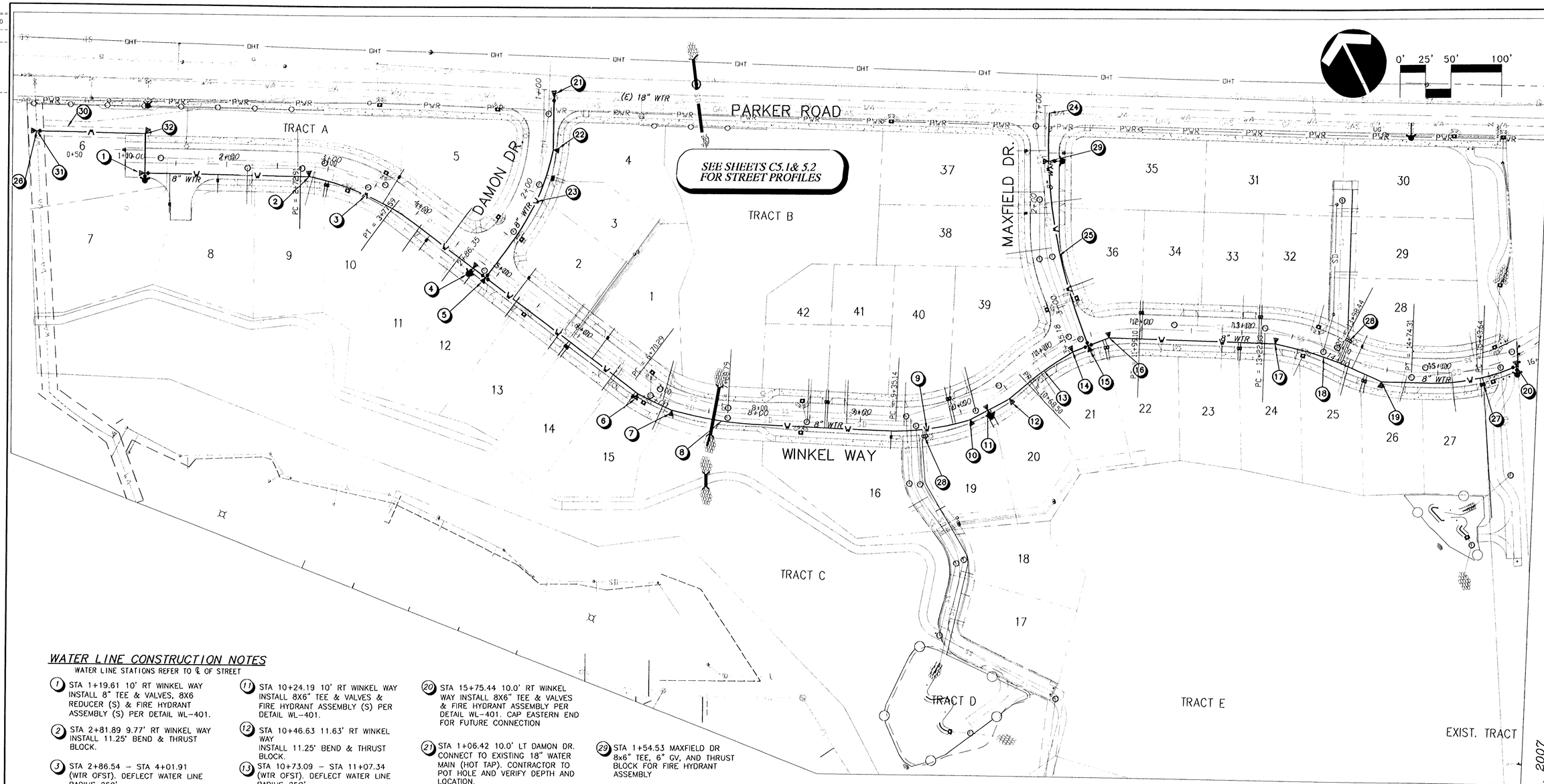

WATER LINE CONSTRUCTION NOTES

WATER LINE STATIONS REFER TO ℄ OF STREET

1. STA 1+19.61 10' RT WINKEL WAY INSTALL 8" TEE & VALVES, 8X6 REDUCER (S) & FIRE HYDRANT ASSEMBLY (S) PER DETAIL WL-401.
2. STA 2+81.89 9.77' RT WINKEL WAY INSTALL 11.25° BEND & THRUST BLOCK.
3. STA 2+86.54 – STA 4+01.91 (WTR OFST). DEFLECT WATER LINE RADIUS 250'.
4. STA 4+76.39 10' RT WINKEL WAY INSTALL 8X6 TEE AND 8" VALVE (W) & FIRE HYDRANT ASSEMBLY (S) PER DETAIL WL-401.
5. STA 4+92.09 10' RT WINKEL WAY INSTALL 8" TEE & 8" VALVES (N,E,W).
6. STA 6+80.08 10.30' RT WINKEL WAY INSTALL 11.25° BEND & THRUST BLOCK.
7. STA 7+15.49 9.10' RT WINKEL WAY INSTALL 11.25° BEND & THRUST BLOCK.
8. STA 7+34.94 – STA 7+92.75 (WTR OFST). DEFLECT WATER LINE RADIUS 300'.
9. STA 9+23.64 – STA 10+04.65 (WTR OFST). DEFLECT WATER LINE RADIUS 250'.
10. STA 10+05.57 11.12' RT WINKEL WAY INSTALL 11.25° BEND & THRUST BLOCK.
11. STA 10+24.19 10' RT WINKEL WAY INSTALL 8X6" TEE & VALVES & FIRE HYDRANT ASSEMBLY (S) PER DETAIL WL-401.
12. STA 10+46.63 11.63' RT WINKEL WAY INSTALL 11.25° BEND & THRUST BLOCK.
13. STA 10+73.09 – STA 11+07.34 (WTR OFST). DEFLECT WATER LINE RADIUS 250'
14. STA 11+26.78 10.18' RT WINKEL WAY INSTALL 11.25° BEND & THRUST BLOCK.
15. STA 11+44.40 10.0'RT WINKEL WAY INSTALL 8" TEE & 8" VALVES (N,E,W).
16. STA 11+67.28 7.07' RT WINKEL WAY INSTALL 11.25° BEND & THRUST BLOCK.
17. STA 13+33.67 9.66' RT WINKEL WAY INSTALL 11.25° BEND & THRUST BLOCK.
18. STA 13+55.07 – STA 14+16.53 (WTR OFST). DEFLECT WATER LINE RADIUS 300'
19. STA 14+46.70 12.48' RT WINKEL WAY INSTALL 22.50° BEND & THRUST BLOCK.
20. STA 15+75.44 10.0' RT WINKEL WAY INSTALL 8X6" TEE & VALVES & FIRE HYDRANT ASSEMBLY PER DETAIL WL-401. CAP EASTERN END FOR FUTURE CONNECTION
21. STA 1+06.42 10.0' LT DAMON DR. CONNECT TO EXISTING 18" WATER MAIN (HOT TAP). CONTRACTOR TO POT HOLE AND VERIFY DEPTH AND LOCATION.
22. STA 1+56.99 11.04' LT DAMON DR. INSTALL 11.25° BEND & THRUST BLOCK.
23. STA 1+57.77 – STA 2+57.32 (WTR OFST). DEFELCT WATER LINE RADIUS 240'
24. STA 1+07.49 10.0' LT MAXFIELD DR. CONNECT TO EXISTING 18" WATER MAIN. REMOVE EXISTING FIRE HYDRANT AND RELOCATE (SEE "PARKER ROAD IMPROVEMENT PLAN"). CONNECT PROPOSED 8" MAIN TO EXISTING TEE.
25. STA 2+02.12 – STA 2+92.26 (WTR OFST). DEFLECT WATER LINE RADIUS 250'
26. CONNECT TO EXISTING 14" WATER MAIN (HOT TAP). POT HOLE TO VERIFY DEPTH AND LOCATION. ADD THRUST BLOCK AND 8" GATE VALVE (E)
27. INSTALL 1" IRRIGATION METER FOR STORM WATER POND
28. RESIDENTIAL 1" WATER METERS. RUN 1" SERVICE ALONG TRACT PER PLUMBING CODE
29. STA 1+54.53 MAXFIELD DR 8x6" TEE, 6" GV, AND THRUST BLOCK FOR FIRE HYDRANT ASSEMBLY
30. INSTALL GRAVEL PATH
31. INSTALL ASPHALT PAD FOR HOT TAP VALVE
32. STA 1+19.61 28.2' LT BEND AND THRUST BLOCK

LEGEND

—W—	PROPOSED 8" DI WATER LINE
———	PROPOSED WATER SERVICE
▲	PROPOSED THRUST BLOCK
▫	PROPOSED WATER METER

NO.	DATE	BY	REVISION COMMENTS
Design	Drawn	Checked	Date Initial Issue Date
JML	JML	MFK	7.20.5

RECORD DRAWING
BY: Larry Stamps
DATE: 01/11/07

Permitted design drawings stamped by:
Fares M. Kekhia
Engineer 17447
June 30, 2007

LEGEND HOMES
HOME BUILDER

MATRIX
DEVELOPER

"AS BUILT DRAWING"
DATE 1/11/07

MAXFIELD SUBDIVISION
WEST LINN, OR
WATER LINE PLAN

AS-BUILT PLAN SUBMITTAL – JANUARY 11, 2007

otak Incorporated
17355 SW Boones Ferry Rd.
Lake Oswego, Oregon 97035
Phone: (503) 635-3818
FAX: (503) 635-5395
Internet: WWW.Otak.COM

13227 D227C5.0
Project No. Drawing No.

C5.0
Sheet No.

Copyright 2005 ©

LKO: CHADM 01/11/2007 5:08pm --> R:\DWG\D227C5.0.DWG

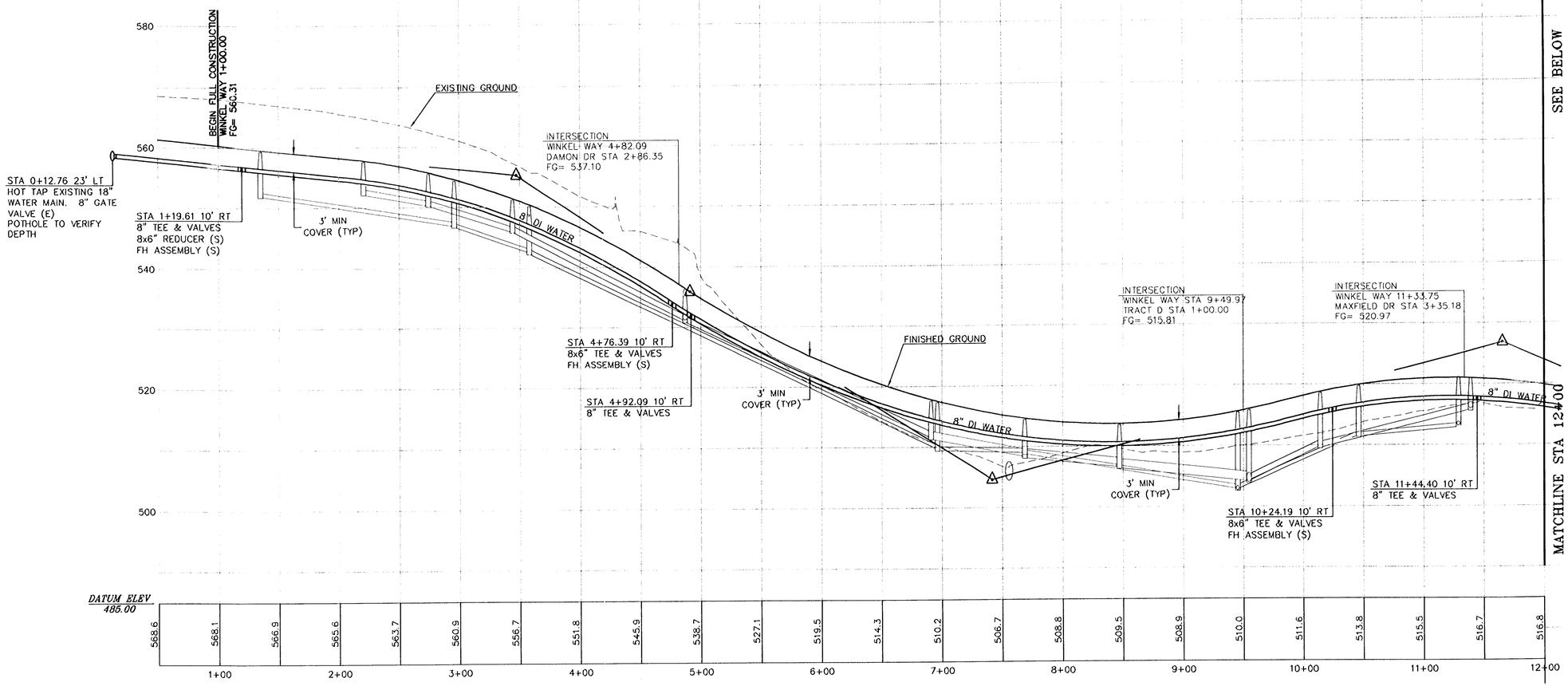

WINKEL WAY WATER LINE

1 / C5.1

SCALE: 1"=50' HORZ
1"=10' VERT.

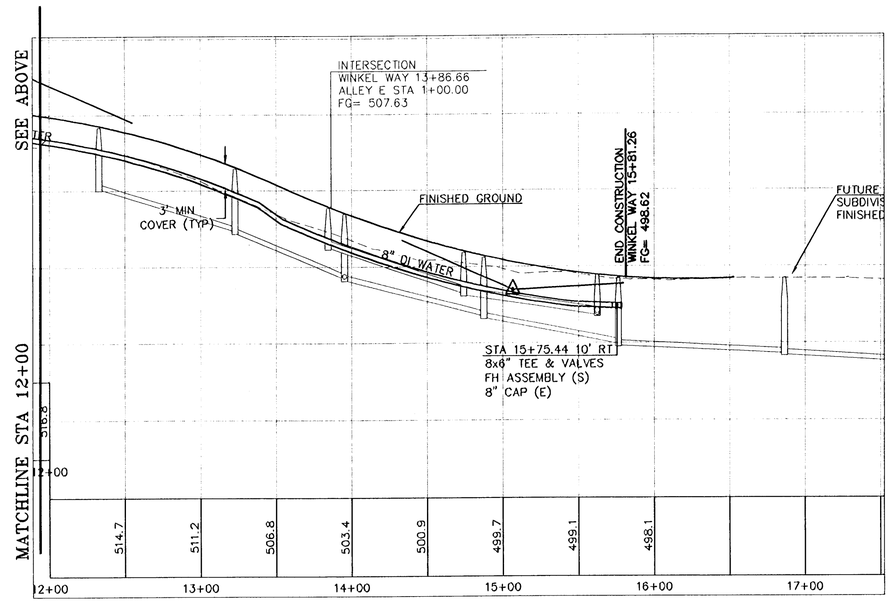

NO.	DATE	BY	REVISION COMMENTS	Date	Initial	Issue Date:

Design JML | Drawn JML | Checked MFK

RECORD DRAWING
BY: Larry Stephens
DATE: 01/11/07

Permitted design drawings stamped by:
Fares M. Kekhia
Engineer 17447
June 30, 2007

LEGEND HOMES — HOME BUILDER

MATRIX DEVELOPMENTS — DEVELOPER

"AS BUILT DRAWING"
DATE 1/11/07 BY

AS-BUILT PLAN SUBMITTAL – JANUARY 11, 2007

MAXFIELD SUBDIVISION

WEST LINN, OR
WATER LINE PROFILE
WINKEL WAY

otak Incorporated

17355 SW Boones Ferry Rd.
Lake Oswego, Oregon 97035
Phone: (503) 635-3618
FAX: (503) 635-5395
Internet: WWW.Otak.COM

13227 D227C5.1
Project No. Drawing No.

C5.1
Sheet No.

Copyright 2005 ©

REF LIST
tscale: 1
resolved
D227X001
TFKSTAMP
D227X900

LKO CHADM 03/06/2006 5:26pm --> R:\DWG\D227C5.1.DWG

XREF LIST
Ltscale: 1
Resolved
D227X001
MFKSTAMP
D227X900

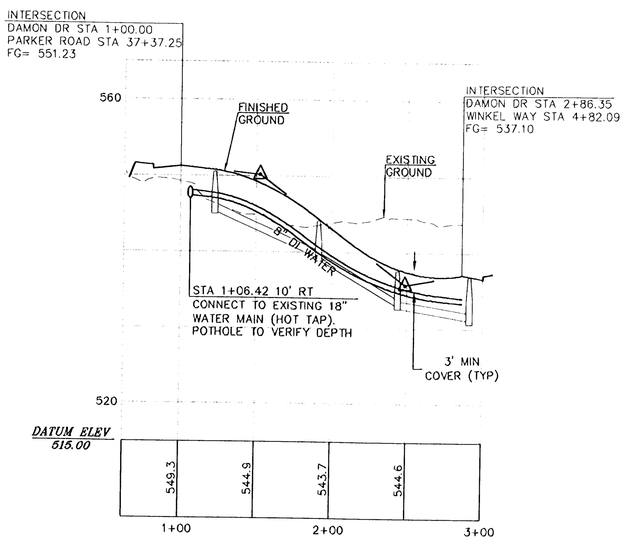

DAMON DRIVE WATER LINE

SCALE: 1"=50' HORZ.
1"=10' VERT.

2
C5.2

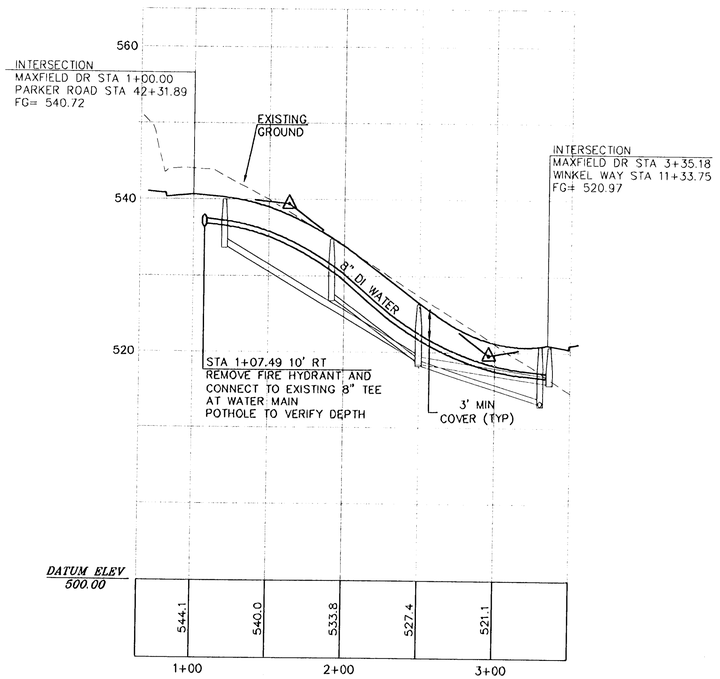

MAXFIELD DRIVE WATER LINE

SCALE: 1"=50' HORZ.
1"=10' VERT.

3
C5.2

NO.	DATE	BY	REVISION COMMENTS

Design	JML	Drawn	JML
Checked	MFK	Date	
Initial Issue Date			

RECORD DRAWING
BY: Sam Barrows
DATE: 01/11/07

Permitted design drawings stamped by:
Fares M. Kekhia
Engineer 17447
June 30, 2007

LEGEND HOMES
HOME BUILDER

MATRIX DEVELOPMENT
DEVELOPER

"AS BUILT DRAWING"
DATE 1/11/07 BY

AS-BUILT PLAN SUBMITTAL - JANUARY 11, 2007

MAXFIELD SUBDIVISION

WEST LINN, OR
WATER LINE PROFILE
DAMON DRIVE & MAXFIELD DRIVE

otak Incorporated

17355 SW Boones Ferry Rd.
Lake Oswego, Oregon 97035
Phone: (503) 635-3618
FAX: (503) 635-5395
Internet: WWW.Otak.COM

13227 D227C5.2
Project No. Drawing No.

C5.2
Sheet No.

Copyright 2005 ©

LKO: LISAB 01/11/2007 3:59pm ---> R:\DWG\D227C5.2.DWG

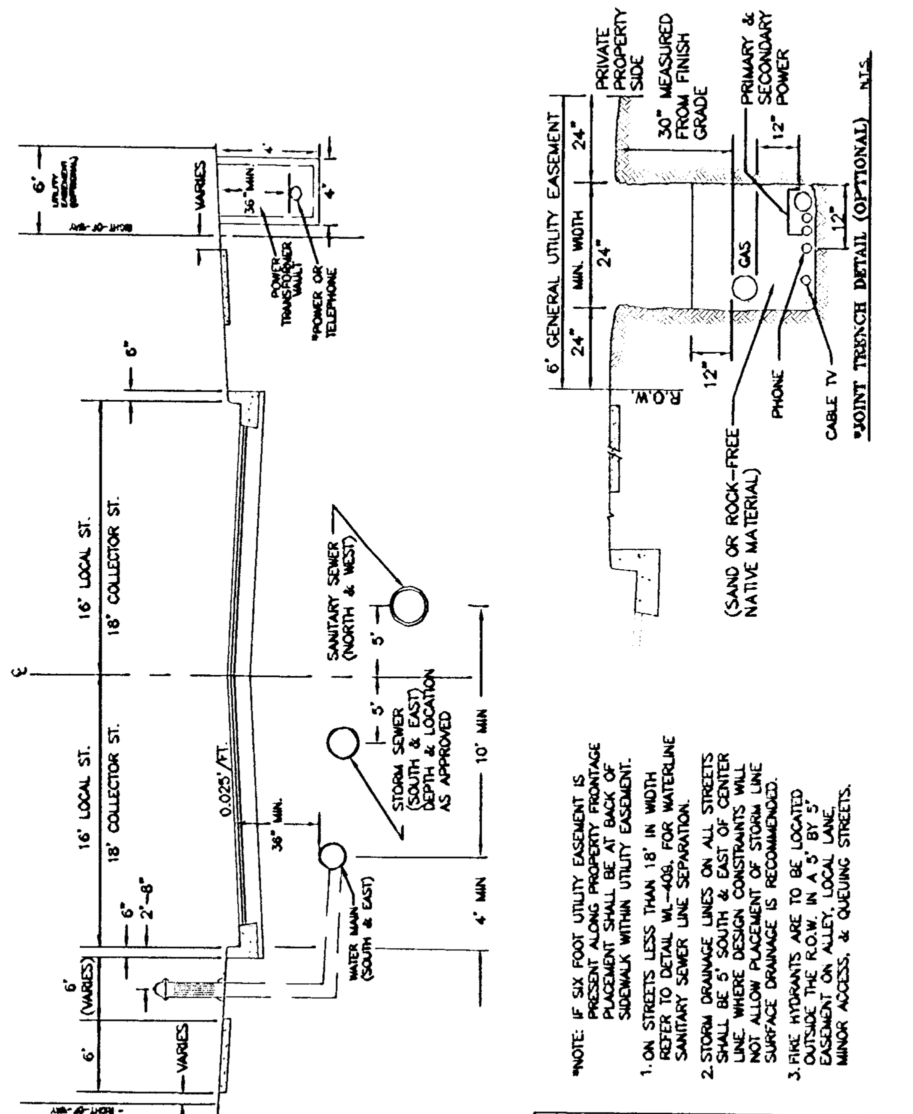

*NOTE: IF SIX FOOT UTILITY EASEMENT IS PRESENT ALONG PROPERTY FRONTAGE, ALL UTILITIES SHALL BE WITHIN UTILITY EASEMENT.

Typical Utility Placement Detail

West Linn

DATE: JAN 2000
DRAWING NO. WL-500
FILE NO. 00-500

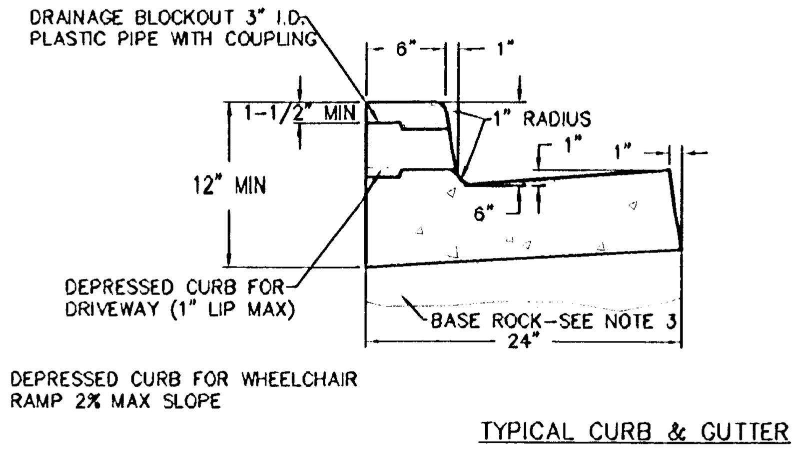

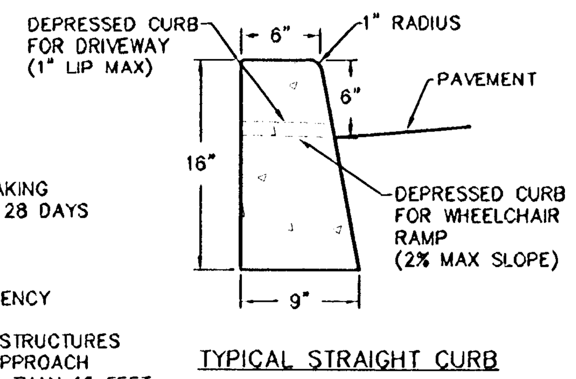

NOTES:
1. CONCRETE SHALL HAVE A BREAKING STRENGTH OF 3300 PSI AFTER 28 DAYS
2. CONTRACTION JOINTS
   A) TO BE PROVIDED
      -AT EACH POINT OF TANGENCY
      -AT EACH COLD JOINT
      -AT EACH SIDE OF INLET STRUCTURES
      -AT BOTH SIDES OF AN APPROACH
   B) SPACING TO BE NOT MORE THAN 15 FEET
   C) THE DEPTH OF THE JOINT SHALL BE AT LEAST 1/3 OF THE THICKNESS OF CONCRETE
   D) EXPANSION JOINTS SHALL NOT BE USED
3. BASE ROCK – 1-1/2"-0", 95% COMPACTION ROCK SHALL BE TO SUBGRADE OF THE STREET SECTION OR 4" IN DEPTH, WHICHEVER IS GREATER
4. DRAINAGE BLOCK – 3" DIA. PLASTIC PIPE
   A) DRAINAGE ACCESS THROUGH EXISTING CURBS SHALL BE DONE BY:
      -CORE DRILLING
      -VERTICAL SAWCUT OF CURB 18" EACH SIDE OF DRAIN AND RE-POURED TO FULL DEPTH OF CURB
5. STAMP TOP OF CURB WITH "W" AT WATER SERVICE CROSSING AND "S" AT SANITARY LATERAL CROSSING

Typical Curbs

West Linn

DATE: JAN 2000
DRAWING NO. WL-501
FILE NO. 00-501

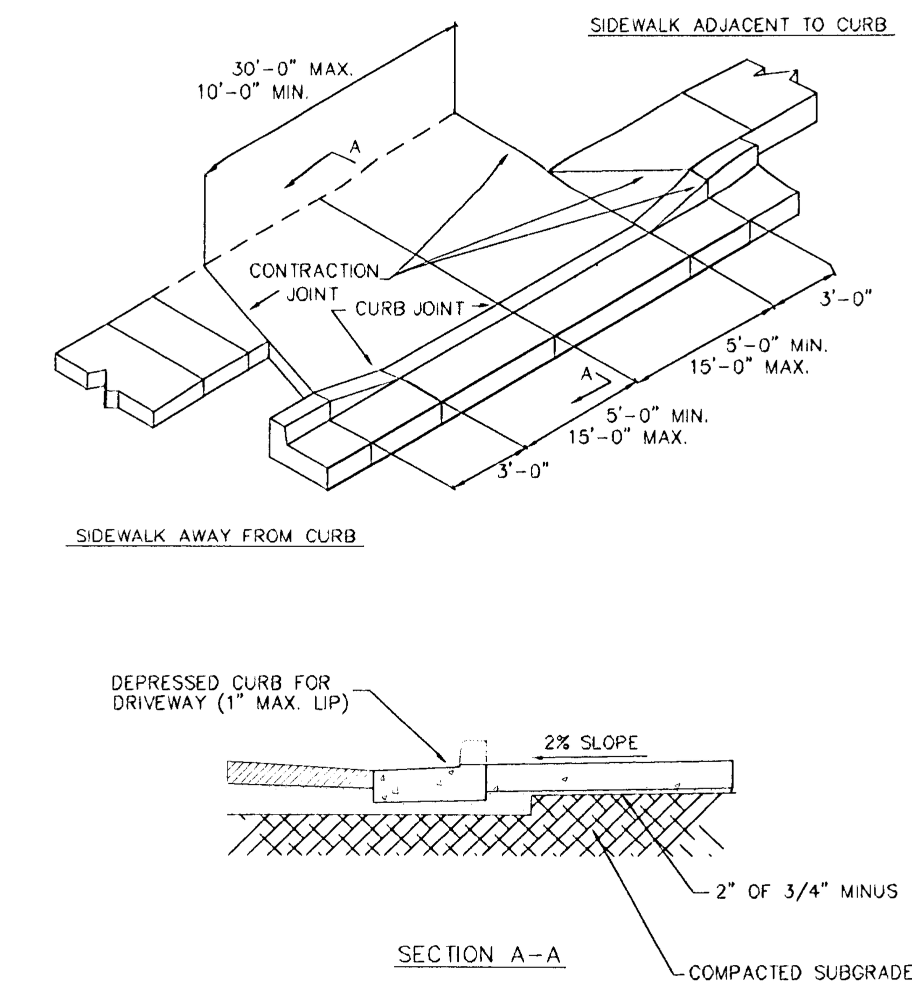

NOTES
1. CONCRETE SHALL HAVE A MINIMUM BREAKING STRENGTH OF 3300 PSI AFTER 28 DAYS, 6 SACK MIX.
2. CURB SHALL BE TROWELED JOINT WITH A MIN. 1/2" RADIUS ALONG BACK OF CURB.
3. DRIVEWAY SHALL BE A MINIMUM 6" THICK.

Residential Driveway

West Linn

DATE: JAN 2000
DRAWING NO. WL-503
FILE NO. 00-503

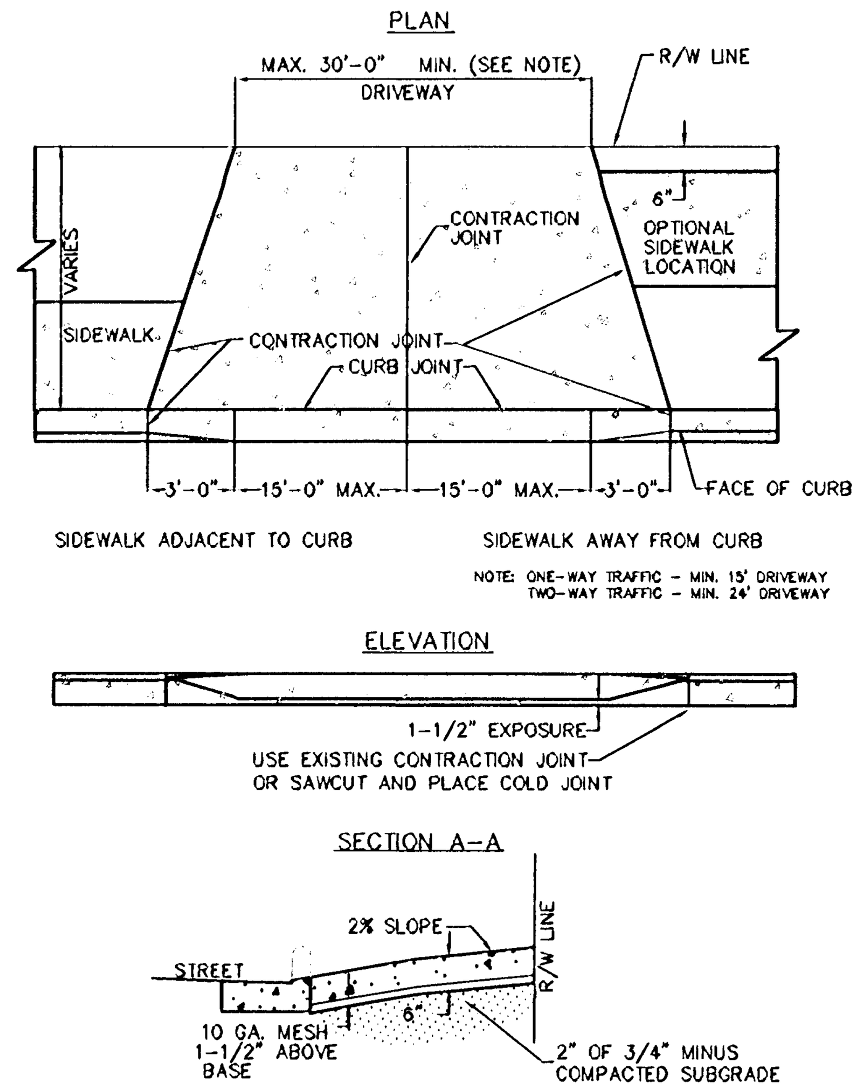

NOTES
1. CONCRETE SHALL HAVE A MINIMUM BREAKING STRENGTH OF 3300 PSI AFTER 28 DAYS, 6 SACK MIX.
2. CURB JOINT SHALL BE A TROWELED JOINT WITH A MIN. 1/2" RADIUS ALONG BACK OF CURB.
3. DRIVEWAY SHALL BE A MINIMUM 6" THICK.

Commercial Driveway

West Linn

DATE: JAN 2000
DRAWING NO. WL-504
FILE NO. 00-504

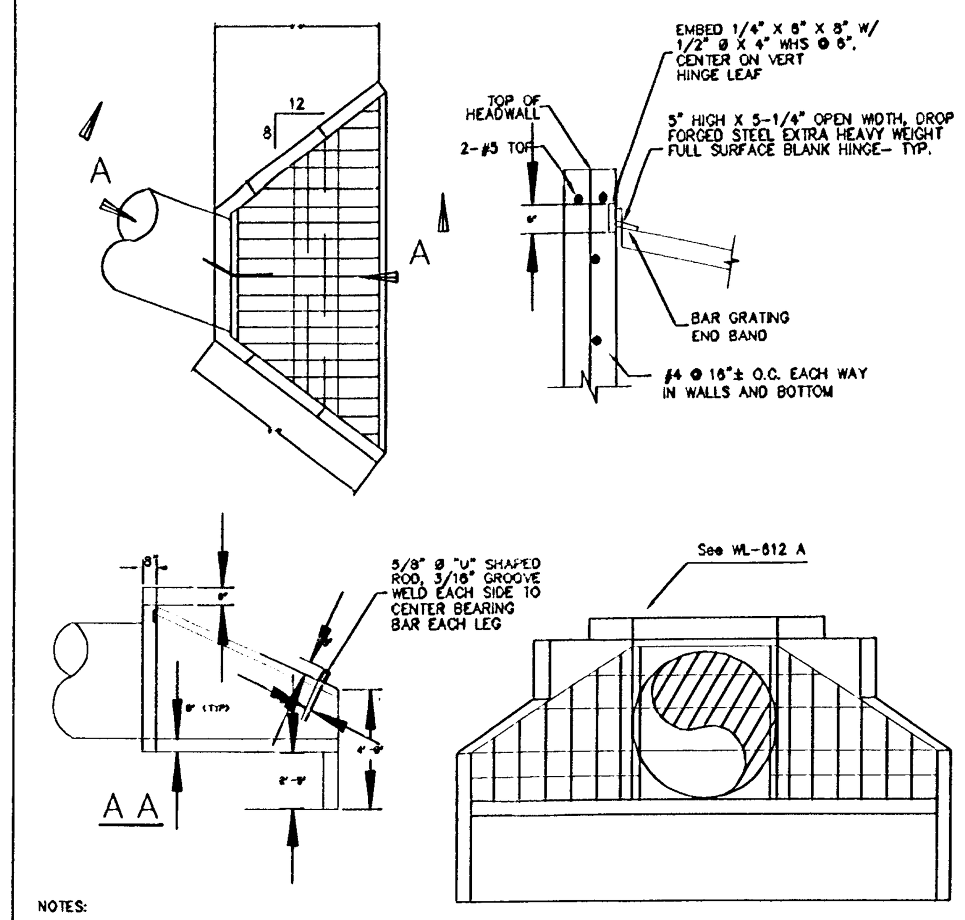

NOTES:
1. FOLLOW ODOT DETAIL 5-7.3 "ALTERNATIVE "A" INLET DETAILS – 2:1 FILL SLOPE". FOR REINFORCEMENT DETAIL USE 5'-0" BARREL HEIGHT. FORM WALL AROUND 54" PIPE.
2. ALL WALL THICKNESS ON THIS PAGE ARE 8" UNLESS OTHERWISE NOTED.

STEEL NOTES:
A. CODES SPECIFICATIONS: STEEL CONSTRUCTION SHALL CONFORM TO THE SPECIFICATIONS AND STANDARDS AS CONTAINED IN THE 9TH EDITION OF THE AISC MANUAL OF STEEL CONSTRUCTION.
B. MATERIAL: STRUCTURAL SHAPES, BARS, PLATES, AND SHEETS INDICATED ON THE DRAWINGS SHALL BE STEEL MEETING ASTM A36 SPECIFICATIONS. BOLTS SHALL CONFORM TO ASTM A307.
C. WELDING: WELDING SHALL CONFORM TO AWS D1.1 CODE FOR ARC AND GAS WELDING IN BUILDING CONSTRUCTION. ELECTRODE SHALL BE E70XX LOW HYDROGEN GROUP. WELDERS SHALL BE CONDUCTED BY WELDERS CERTIFIED BY THE AWS. ALL WELDS SHALL BE MIN 3/16" FILLET UNLESS OTHERWISE NOTED.
D. HOT DIP GALVANIZING: UNLESS OTHERWISE NOTED, ALL STEEL FABRICATIONS SHALL BE HOT DIPPED GALVANIZED AFTER FABRICATION.

Standard Inlet and Outlet Headwall Structure (For Outlets of 36" Dia. or Greater)

West Linn

DATE: MAY 2005
DRAWING NO. WL-612
FILE NO. 00-612

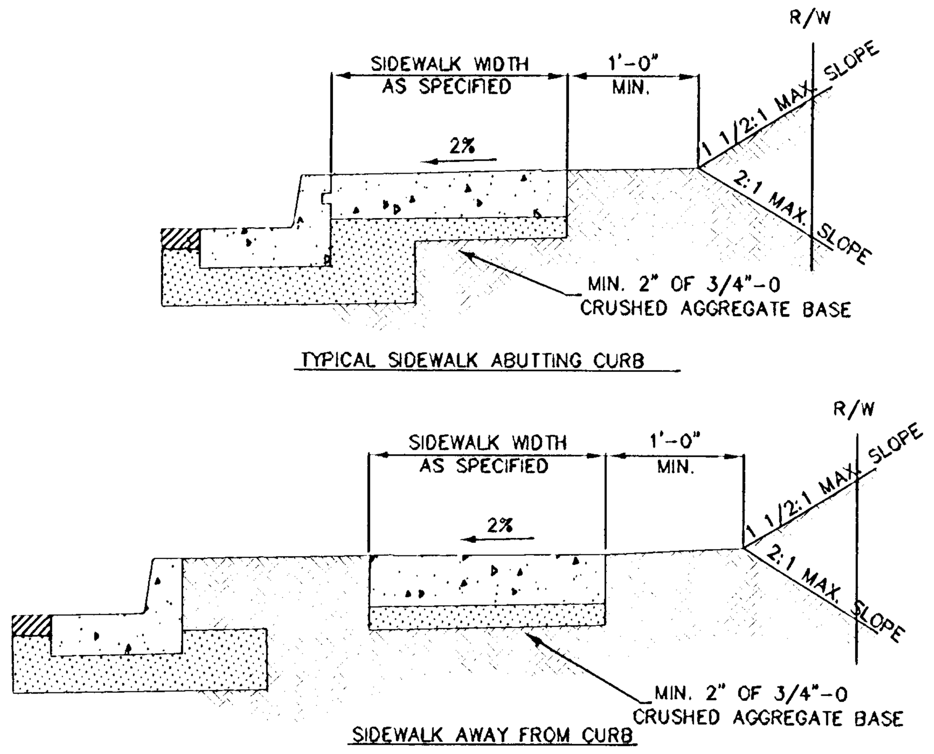

NOTES
1. CONCRETE SHALL BE 3300 PSI AT 28 DAYS, 6 SACK MIX, SLUMP RANGE OF 1 1/2" TO 3".
2. PANEL LENGTHS SHALL BE EQUAL TO THE SIDEWALK WIDTH, BUT MAY BE ADJUSTED WITH THE CITY ENGINEER'S APPROVAL.
3. CONTRACTION JOINTS (1/3RD OF THE THICKNESS OF CONCRETE) SHALL BE PLACED EVERY THIRD PANEL, WITH A MAX. SPACING OF 18 FEET. JOINTS SHALL ALSO BE PLACED AT THE SIDES OF DRIVEWAY APPROACHES, UTILITY VAULTS, AND WHEELCHAIR RAMPS.
4. A CURING COMPOUND SHALL BE USED. WHITE REFLECTIVE SHEETING SHALL BE USED IN CASE OF RAIN.
5. FOR SIDEWALKS ADJACENT TO THE CURB AND POURED AT THE SAME TIME AS THE CURB, THE JOINT BETWEEN THEM SHALL BE A TROWELED JOINT WITH A MIN. 1/2" RADIUS.
6. THE SIDEWALK SHALL HAVE A MIN. THICKNESS OF 6" IF MOUNTABLE CURB IS USED OR IF THE SIDEWALK IS INTENDED AS A PORTION OF THE DRIVEWAY. OTHERWISE, THE SIDEWALK SHALL HAVE A MIN. THICKNESS OF 4".
7. DRAIN BLOCKOUTS IN THE CURB SHALL BE EXTENDED TO THE BACK OF THE SIDEWALK WITH A 3" DIA. PLASTIC PIPE AT A 2% SLOPE. A CONTRACTION JOINT SHALL BE PLACED OVER THE PIPE.

Concrete Sidewalk Cross Section

West Linn

DATE: JAN 2000
DRAWING NO. WL-508
FILE NO. 00-508

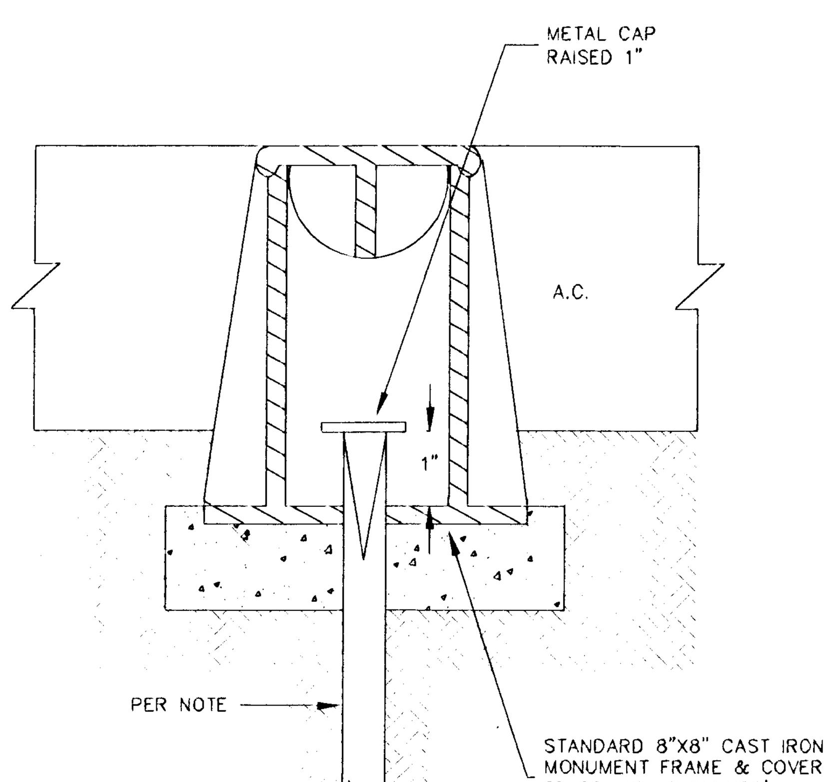

NOTES:
ALL MONUMENTS SHALL USE EITHER 5/8" DIA.X 30" LONG IRON ROD OR 3/4" DIA.X 30" LONG IRON PIPE.

ALL MONUMENTS SHALL BE IN ACCORDANCE WITH ORS 209.250(4).

CONCRETE SHALL BE CLASS 3300.

FRAME AND COVER SHALL BE CAST IRON OR ALUMINUM.

COVER SHALL HAVE "MONUMENT" CAST INTO TOP.

Centerline Survey Monuments

West Linn

DATE: JAN 2000
DRAWING NO. WL-513
FILE NO. 00-513

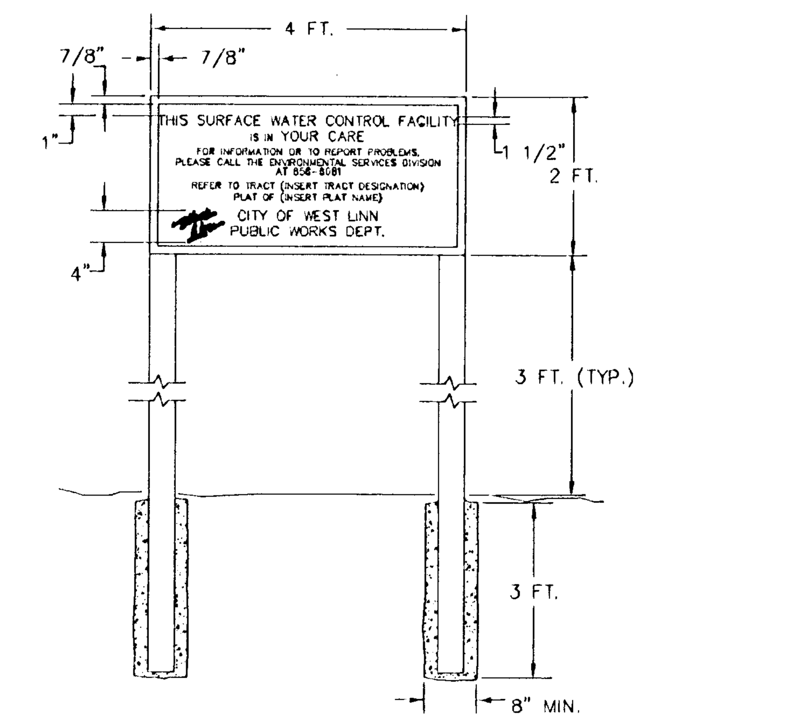

SPECIFICATIONS:
SIZE: 48" BY 24"
MATERIAL: GRADE "B" OR BETTER EXTERIOR PLYWOOD
PAINT: FACE – 3 COATS OUTDOOR ENAMEL (SPRAYED). BACK – 1 COAT OUTDOOR ENAMEL (SPRAYED).
LETTERING: SILK SCREEN ENAMEL WHERE POSSIBLE, OR HAND PAINTED ENAMELS.
COLORS: BLACK AND WHITE. WHITE BACKGROUND, LETTERING AND BORDER IN BLACK
TYPE FACE: HELVETICA. 1 1/2" TALL WITH 7/8" SPACING BETWEEN LETTERS AND OUTER BORDER. OUTER BORDER 1/2" WIDTH
INSTALLATION: SECURED TO CHAIN LINK FENCE IF AVAILABLE, OTHERWISE INSTALL ON TWO 8 FT. LONG 4" X 4" POSTS, PRESSURE TREATED, INSTALLED IN 3 FT. DEEP CONCRETE FILLED POST HOLES (8" MIN. DIA.)

Surface Water Facility Sign

West Linn

DATE: JAN 2000
DRAWING NO. WL-615
FILE NO. 00-615

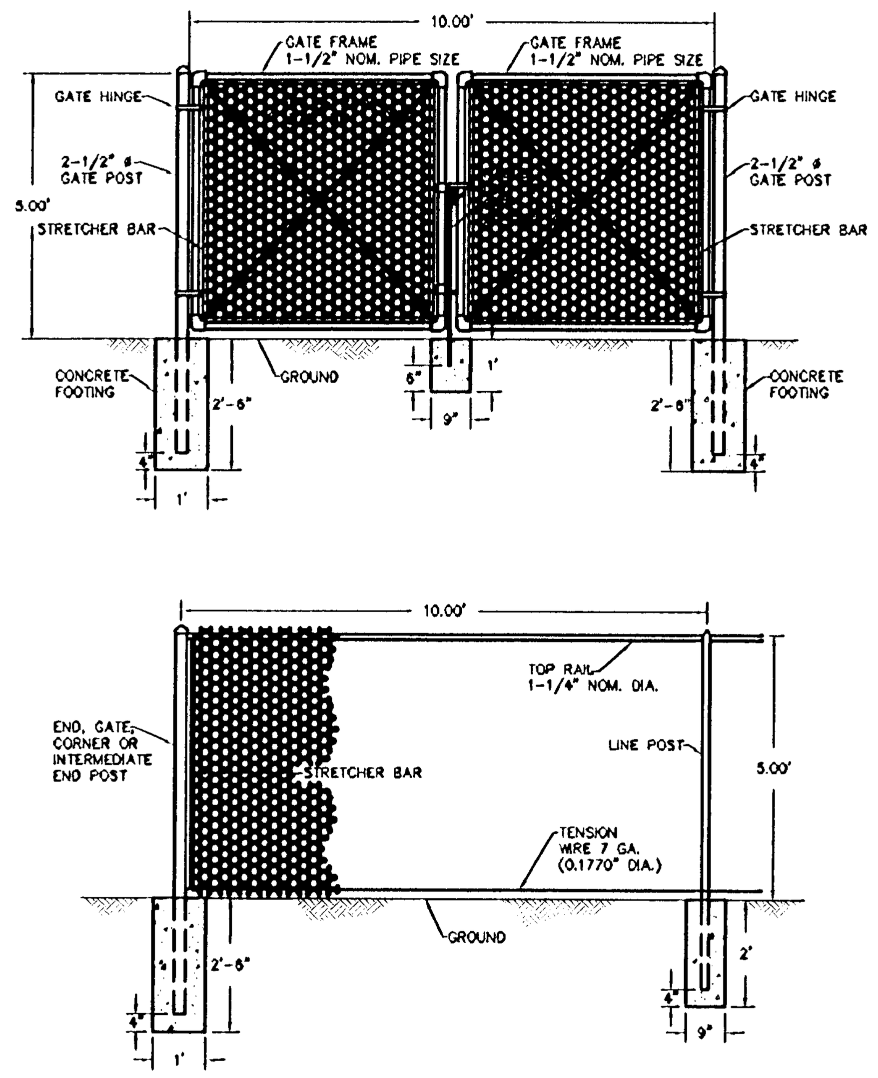

NOTES:
1. BLACK POWDER COATING ON ALL HARDWARE AND ACCESSORIES IS REQUIRED.
2. ALL MATERIAL AND WORKMANSHIP SHALL BE IN ACCORDANCE WITH THE CURRENT STATE OF OREGON STANDARD SPECIFICATIONS FOR HIGHWAY CONSTRUCTION.

Surface Water Facility Fence

West Linn

DATE: JAN 2000
DRAWING NO. WL-616
FILE NO. 00-616

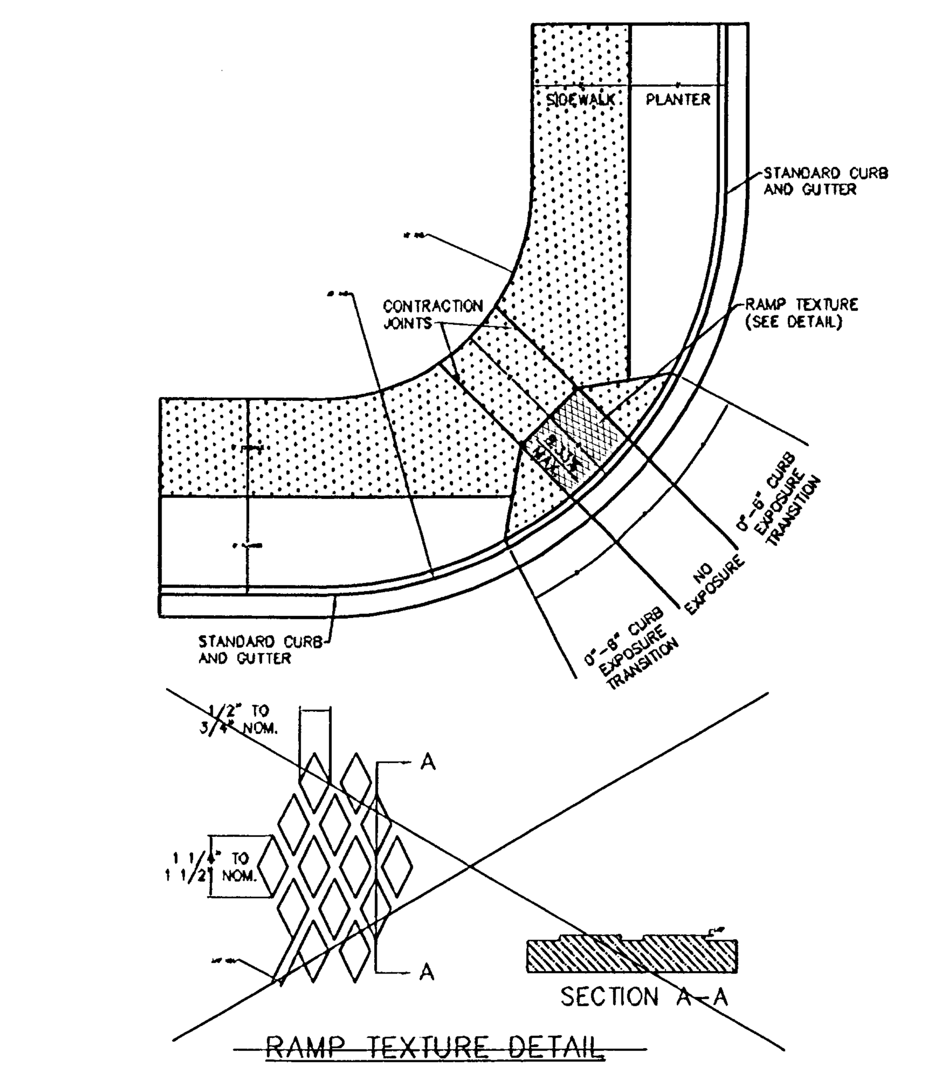

NOTES:
1. THE "AMERICANS WITH DISBILITIES ACT" (ADA) REQUIRES THAT ACCESS RAMPS TO SIDEWALKS CONFORM TO ALL FEDERAL GUIDELINES. EXCEPTIONS TO THE REQUIREMENTS IN THIS DRAWING MUST BE APPROVED BY THE CITY ENGINEER.
2. NO ABOVE GROUND UTILITIES ARE PERMITTED WITHIN RAMP AREA.
3. ~~RAMP SURFACE SHALL BE TEXTURED WITH RAISED DIAMOND TEXTURE TEXTURING SHALL BE DONE WITH AN EXPANDED METAL GRATE STAMPED INTO THE CONCRETE.~~
4. CONCRETE STRENGTH SHALL BE 3300 PSI.
5. PLACE CONTRACTION JOINTS AS SHOWN ABOVE.
6. WHEN EITHER OPPOSING CURB RAMP HAS AN EXISTING TWIN RAMP, USE DETAIL WL-507B.

Single Curb Ramp (For Use At Intersection of (2) Local Streets Only)

West Linn

DATE: JAN 2000
DRAWING NO. WL-507A
FILE NO. 00-507A

NOTE: ADA REQUIRES TRUNCATED DOMES INSTEAD OF TEXTURED RAMP

AS-BUILT PLAN SUBMITTAL – JANUARY 11, 2007

NO.	DATE	BY	REVISION COMMENTS

Design	Drawn	Checked	Date	Initial Issue Date:
JML	JML	MFK		

RECORD DRAWING
BY: [signature]
DATE: 01/11/07

Permitted design drawings stamped by:
Fares M. Kekhia
Engineer 17447
June 30, 2007

LEGEND HOMES
HOME BUILDER

MATRIX DEVELOPMENT CORPORATION
DEVELOPER

"AS BUILT DRAWING"
DATE 1/11/07 BY [signature]

MAXFIELD SUBDIVISION
WEST LINN, OR
STREET AND STORM DETAILS

otak
Incorporated
17355 SW Boones Ferry Rd.
Lake Oswego, Oregon 97035
Phone: (503) 635-3618
FAX: (503) 635-5395
Internet: WWW.Otak.COM

Project No.	Drawing No.
13227	D227C6.0

Sheet No. C6.0

Copyright 2005 ©

XREF LIST
Ltscale: 1
Resolve:
D227X001
MFKSTAMP
LKD: CHADM 03/08/2006 4:35pm --> R:\DWG\D227C6.0.DWG

XREF LIST
Ltscale: 1
Resolve
D227X01
MFKSTAP

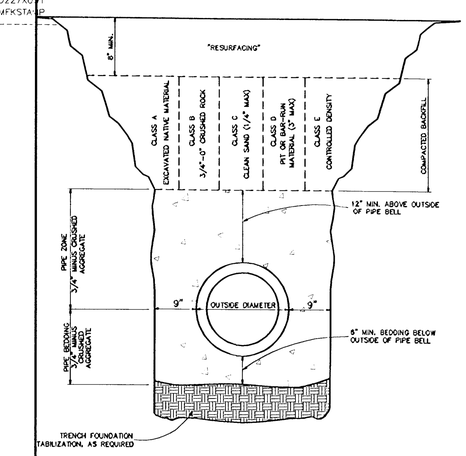

Trench Backfill, Bedding and Pipe Zone

West Linn | DATE: JAN 2000 | DRAWING NO. WL-200 | FILE NO. 00-200

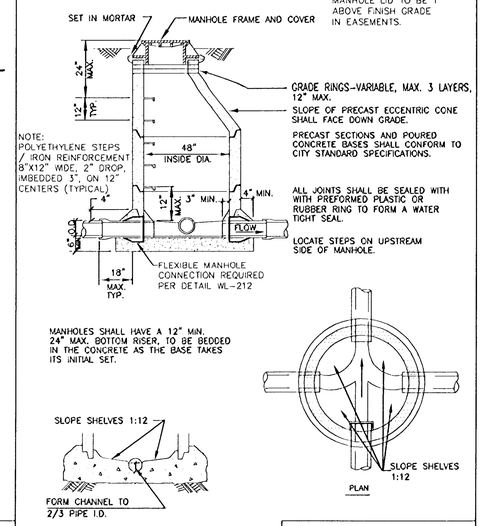

NOTE:
MANHOLE LID TO BE 1' ABOVE FINISH GRADE IN EASEMENTS.

NOTE:
POLYETHYLENE STEPS / IRON REINFORCEMENT 8"X12" WIDE, 2" DROP, IMBEDDED 3", ON 12" CENTERS (TYPICAL)

MANHOLES SHALL HAVE A 12" MIN. 24" MAX. BOTTOM RISER, TO BE BEDDED IN THE CONCRETE AS THE BASE TAKES ITS INITIAL SET.

NOTE:
CHANNELS MUST BE ABLE TO PASS A 7"X30" CYLINDER INTO PIPES. SHELF SHALL NOT BE BELOW THE TOP OF THE PIPE.

Standard Manhole for Less than 36" Pipe

West Linn | DATE: JAN 2000 | DRAWING NO. WL-207 | FILE NO. 00-207

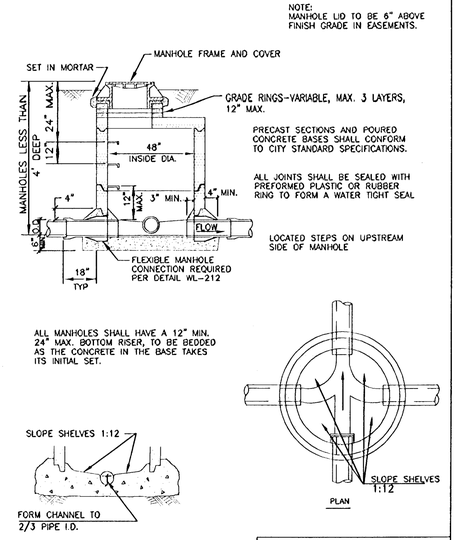

NOTE:
MANHOLE LID TO BE 6" ABOVE FINISH GRADE IN EASEMENTS.

ALL MANHOLES SHALL HAVE A 12" MIN. 24" MAX. BOTTOM RISER, TO BE BEDDED AS THE CONCRETE IN THE BASE TAKES ITS INITIAL SET.

NOTE:
CHANNELS MUST BE ABLE TO PASS A 7"X30" CYLINDER INTO PIPES. SHELF SHALL NOT BE BELOW SPRING LINE OF THE PIPE.

Shallow Manhole for Less than 36" Pipe

West Linn | DATE: JAN 2000 | DRAWING NO. WL-208 | FILE NO. 00-208

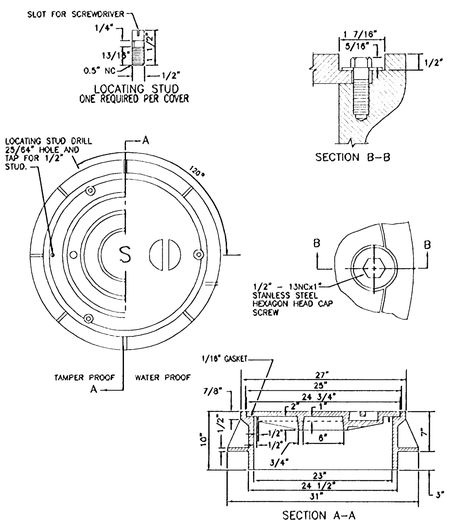

NOTES:
1. COVER AND FRAME TO BE MACHINED TO A TRUE BEARING ALL AROUND.
2. MATERIAL SHALL BE OF GRAY CAST IRON A.S.T.M. A-48 CLASS 30.
3. 2 HOLE LID FOR SANITARY SEWER
4. 16 HOLE LID FOR STORM SEWER

Waterproof and Tamperproof Manhole Frame and Cover

West Linn | DATE: JAN 2000 | DRAWING NO. WL-214 | FILE NO. 00-214

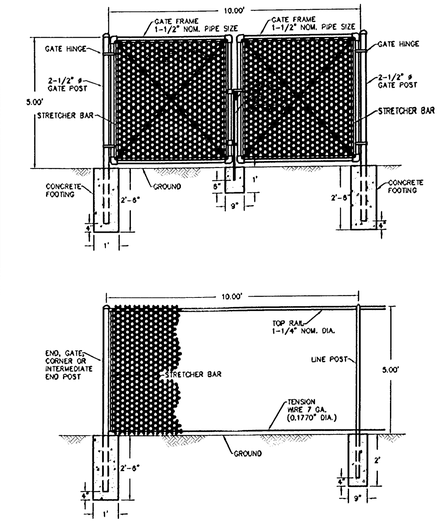

NOTES:
1. BLACK POWDER COATING ON ALL HARDWARE AND ACCESSORIES IS REQUIRED.
2. ALL MATERIAL AND WORKMANSHIP SHALL BE IN ACCORDANCE WITH THE CURRENT STATE OF OREGON STANDARD SPECIFICATIONS FOR HIGHWAY CONSTRUCTION.

Surface Water Facility Fence

West Linn | DATE: JAN 2000 | DRAWING NO. WL-616 | FILE NO. 00-616

NOTES:
1. COVER AND FRAME TO BE MACHINED FOR TRUE BEARING.
2. MATERIAL SHALL BE GRAY CAST IRON A.S.T.M. A-48 CLASS 30.
3. TWO HOLE LID FOR SANITARY SEWER.
4. 16 HOLE LID FOR STORM SEWER.

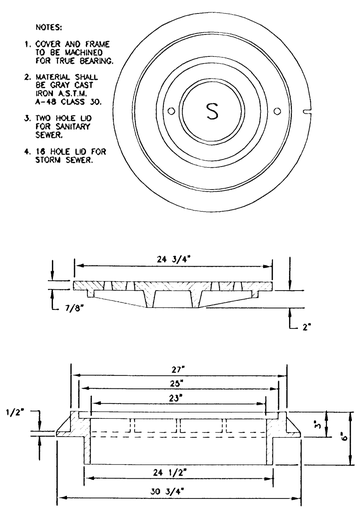

Suburban Manhole Frame and Cover 3" Depth

West Linn | DATE: JAN 2000 | DRAWING NO. WL-300 | FILE NO. 00-300

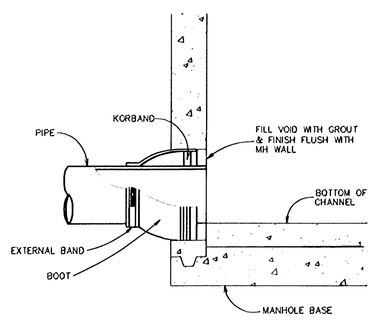

FLEXIBLE MANHOLE CONNECTION
(KOR-N-SEAL OR EQUAL)

Flexible Manhole Connection

West Linn | DATE: JAN 2000 | DRAWING NO. WL-212 | FILE NO. 00-212

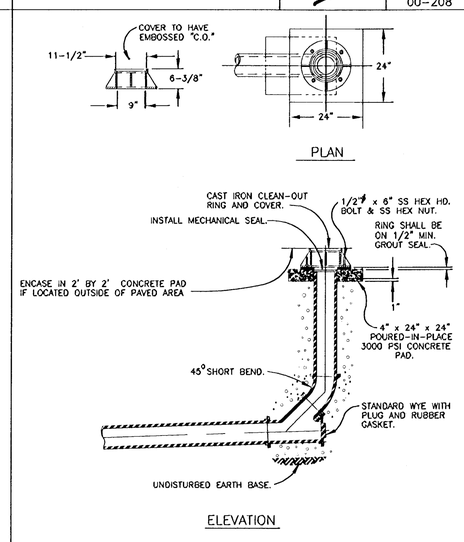

Standard Clean Out

West Linn | DATE: MAY 2005 | DRAWING NO. WL-206 | FILE NO. 00-206

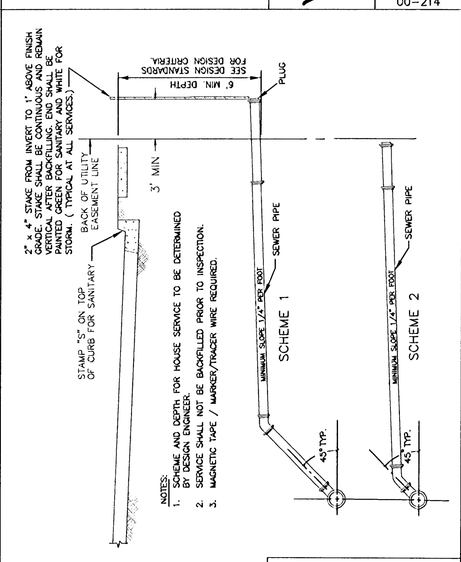

Service Branch

West Linn | DATE: JAN 2000 | DRAWING NO. WL-218 | FILE NO. 00-218

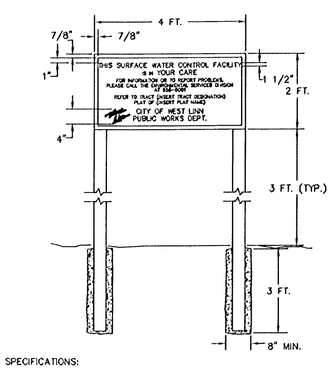

SPECIFICATIONS:
SIZE: 48" BY 24"
MATERIAL: GRADE "B" OR BETTER EXTERIOR PLYWOOD
PAINT: FACE - 3 COATS OUTDOOR ENAMEL (SPRAYED).
BACK - 1 COAT OUTDOOR ENAMEL (SPRAYED).
LETTERING: SILK SCREEN ENAMEL WHERE POSSIBLE, OR HAND PAINTED ENAMELS.
COLORS: BLACK AND WHITE. WHITE BACKGROUND, LETTERING AND BORDER IN BLACK
TYPE FACE: HELVETICA. 1 1/2" TALL WITH 7/8" SPACING BETWEEN LETTERS AND OUTER BORDER. OUTER BORDER 1/2" WIDTH
INSTALLATION: SECURED TO CHAIN LINK FENCE IF AVAILABLE, OTHERWISE INSTALL ON TWO 8 FT. LONG 4" X 4" POSTS, PRESSURE TREATED, INSTALLED IN 3 FT. DEEP CONCRETE FILLED POST HOLES (8" MIN. DIA.)

Surface Water Facility Sign

West Linn | DATE: JAN 2000 | DRAWING NO. WL-615 | FILE NO. 00-615

NO.	DATE	BY	REVISION COMMENTS

Design: JML | Drawn: JML | Checked: MFK | Date: 7.20.5 | Initial Issue Date:

RECORD DRAWING
BY: [signature]
DATE: 01/11/07

Permitted design drawings stamped by:
Fares M. Kekhia
Engineer 17447
June 30, 2007

LEGEND HOMES — HOME BUILDER
MATRIX DEVELOPMENT CORPORATION — DEVELOPER

"AS BUILT DRAWING"
DATE 1/11/07 BY [signature]

MAXFIELD SUBDIVISION
WEST LINN, OR
STORM AND SANITARY DETAILS

AS-BUILT PLAN SUBMITTAL - JANUARY 11, 2007

otak Incorporated
17355 SW Boones Ferry Rd.
Lake Oswego, Oregon 97035
Phone: (503) 635-3818
FAX: (503) 635-5395
Internet: WWW.Otak.COM

13227 D227C6.1
Project No. Drawing No.
C6.1
Sheet No.

Copyright 2005 ©

LKO CHADM 03/06/2006 5:29pm --> R:\DWG\D227C6.1.DWG

XREF LIST
Ltscale: 1
Resolve
D227X01
MFKSTAMP

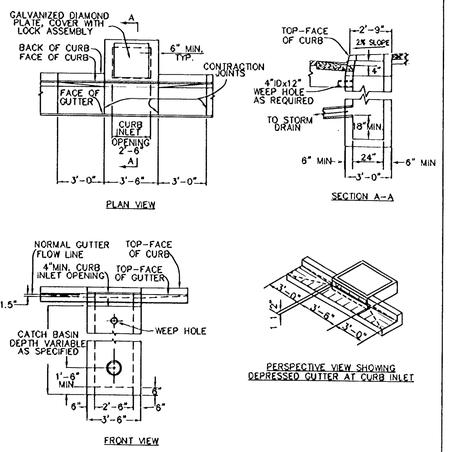

PERSPECTIVE VIEW SHOWING DEPRESSED GUTTER AT CURB INLET

NOTES:
1. ALL FABRICATED METAL PARTS SHALL BE HOT-DIPPED GALVANIZED AFTER FABRICATION.
2. CONCRETE SHALL BE CLASS 3000.
3. CURB INLET BASE MAY BE PRECAST OR CAST-IN-PLACE.
4. FOR SLOPES OF 5% OR GREATER, USE DWG. WL-601.

Gutter Inlet 2 1/2 A	
West Linn	DATE: JAN 2000
	DRAWING NO. WL-600
	FILE NO. 00-600

MANHOLE RIMS AND COVERS AS MANUFACTURED BY HERN IRON WORKS, COEUR D' ALENE, IDAHO. COVER PATTERN NO. 2312, RIM PATTERN NO. 2311 OR APPROVED EQUAL.

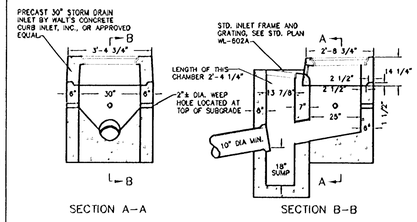

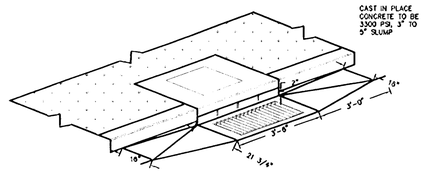

Combination Curb Inlet	
West Linn	DATE: JAN 2000
	DRAWING NO. WL-601
	FILE NO. 00-601

NOTES:
1. CONCRETE STRENGTH SHALL BE 3300 PSI.
2. PRECAST BASE WALLS SHALL BE A MINIMUM 4" THICK. CAST-IN-PLACE BASE WALLS SHALL BE 6" THICK.

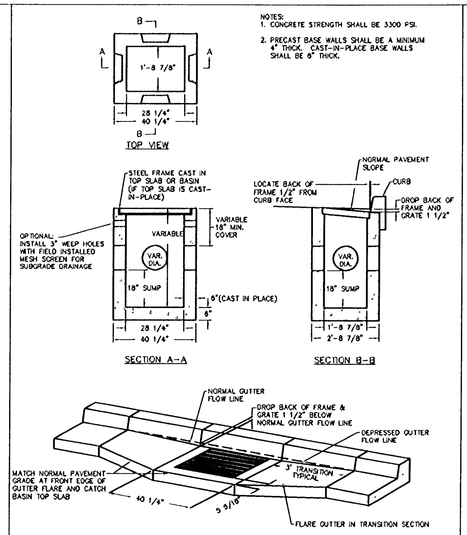

NOTE:
PRECAST TOP SLAB SHOWN WITH GUTTER TRANSITION FLARE IF THE TOP SLAB IS CAST-IN-PLACE, NO FLARE IS REQUIRED IN THE TRANSITION SECTION: MATCH THE TOP FRONT EDGE OF THE FRAME AND THE TOP FRONT EDGE OF THE CAST-IN-PLACE TOP SLAB TO THE NORMAL PAVEMENT GRADE.

Type G-1 Catch Basin with Sump	
West Linn	DATE: JAN 2000
	DRAWING NO. WL-602
	FILE NO. 00-602

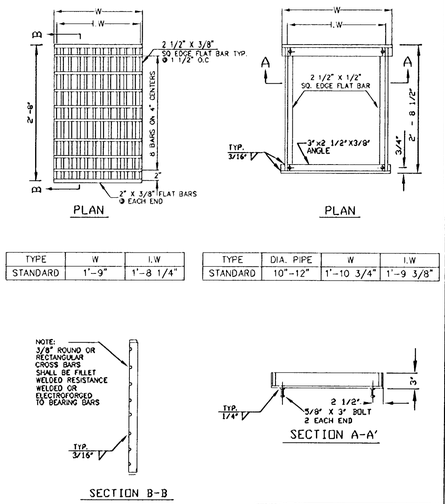

TYPE	W	I.W
STANDARD	1'-9"	1'-8 1/4"

TYPE	DIA. PIPE	W	I.W
STANDARD	10"-12"	1'-10 3/4"	1'-9 3/8"

NOTE:
USE VERTICAL BEARS IN CORNERS. FILLET WELD JOINT ON BOTOM OF FRAME. GRATE MUST REST FLAT ON FRAME SURFACE.

Frame & Grate for Gutter & Curb Inlets	
West Linn	DATE: JAN 2000
	DRAWING NO. WL-602A
	FILE NO. 00-602A

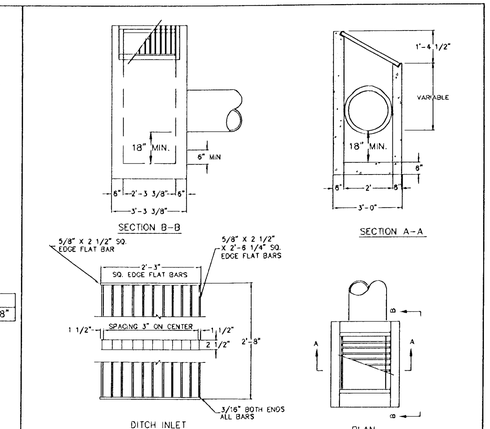

NOTES:
1. CONCRETE STRENGTH SHALL BE 3300 PSI.
2. CATCH BASIN, FRAME, AND GRATES SHALL MEET H20 LOADING.
3. INSIDE FRAME DIMENSIONS: 2'-3 3/8", 2'-8 1/2".

NOTE:
3/8" CROSS BARS SHALL BE FLUSH WITH THE GRATE SURFACE AND MAY BE FILLET WELDED, RESISTANCE WELDED OR ELECTROFORGED TO BEARING BARS.

DITCH INLET FRAME

INLET TYPE	V	Y	Y1	NO. OF BARS	TYPE
D	2'-4 3/4"	2'-3 3/8"	2'-0"	9	1

Standard Ditch Inlet	
West Linn	DATE: JAN 2000
	DRAWING NO. WL-603
	FILE NO. 00-603

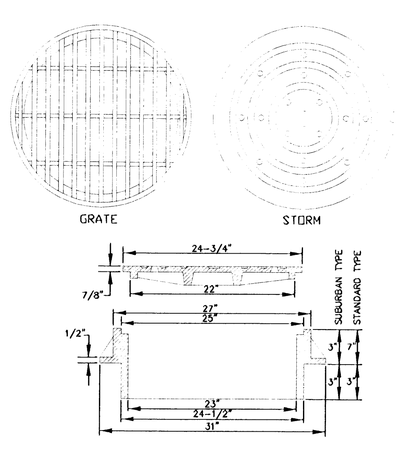

NOTES:
1. USE SUBURBAN TYPE ONLY IN NON-TRAFFIC AREAS, AND ONLY WITH APPROVAL BY THE CITY.
2. COVER AND FRAME SHALL BE GRAY CAST IRON ASTM A-48 CLASS 30.
3. COVER AND FRAME TO BE MACHINED TO A TRUE BEARING ALL AROUND.
4. NOTCH LID FOR LIFTING HOOK.
5. OPEN GRATES REQUIRE APPROVAL BY CITY, AND MUST BE BICYCLE SAFE IF USED IN TRAFFIC AREAS.

SUBURBAN AND STANDARD MANHOLE FRAME AND COVER

Manhole Covers	
West Linn	DATE: JAN 2000
	DRAWING NO. WL-605
	FILE NO. 00-605

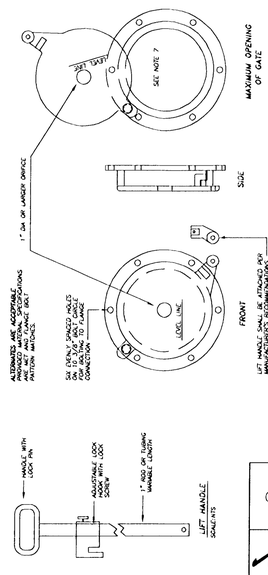

CLEANOUT/SHEAR GATE
SCALE: N.T.S.

NOTES:
1. CLEANOUT/SHEAR GATE AND LIFT HANDLE SHALL BE ALUMINUM ALLOY PER ASTM B-26-20-3A.
2. LIFT HANDLE EITHER SOLID OR TUBING WITH ADJUSTABLE HOOK AS REQUIRED.
3. NEOPRENE RUBBER GASKET REQUIRED BETWEEN RIDER MOUNTING FLANGE AND GATE FLANGE.
4. MATING SURFACES OF LID AND BODY TO BE MACHINED FOR PROPER FIT.
5. FLANGE MOUNTING BOLTS SHALL BE 3/4" DIAMETER STAINLESS STEEL.
6. LIFT HANDLE SHALL BE ADJUSTABLE TO ALLOW FOR ATTACHMENT OF LOCK HOOK. THE FLANGE CONNECTION, ABOVE AND MADE A 6.5" BOLT CIRCLE FOR BOLTING THE FLANGE CONNECTION.
7. GATE SHALL NOT EXCEED WITHIN THE CLEAR OPENING BY LIMITED RANGE MOVEMENT. STOP TAB, OR OTHER DEVICE.

Cleanout / Shear Gate	
West Linn	DATE: MAY 2005
	DRAWING NO. WL-611
	FILE NO. 00-611

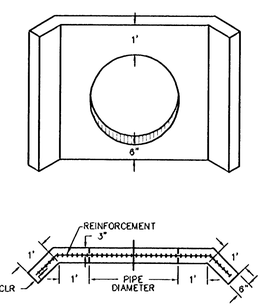

NOTES:
1. USE CONCRETE HAVING A 28 DAY DESIGN STRENGTH OF 3300 PSI.
2. OUTLET WING WALL SHALL BE USED FOR ALL OUTFALL PIPES FROM 10" TO 36".
3. THIS DETAIL REPRESENTS THE MINIMUM REQUIREMENT. THE NEED FOR ADDITIONAL STEEL, A FOOTING AND DRAINAGE BEHIND THE WALL SHALL BE INVESTIGATED BY THE DESIGN ENGINEER.
4. FOR PIPES LARGER THAN 33" OR MULTIPLE PIPE OUTLETS, USE DETAIL WL-612.
5. CONCRETE REINFORCEMENT SHALL CONSIST OF:
   A) ADDING A POLY-FIBER MESH TO THE CONCRETE MIX OR
   B) USE (2) #4 BARS ABOVE AND BELOW PIPE AND #4 BARS AT 6" O.C. VERTICALLY.

Outlet Headwall (For Outlet Pipes of 10" to 33")	
West Linn	DATE: JAN 2000
	DRAWING NO. WL-613
	FILE NO. 00-613

D = PIPE DIAMETER
W = BOTTOM WIDTH OF CHANNEL
P = WETTED PERIMETER OF CHANNEL

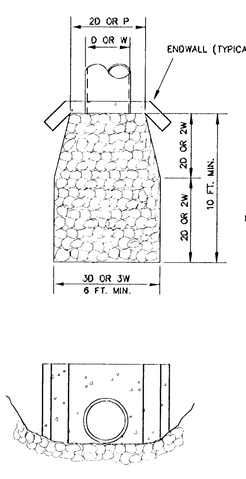

DESIGN VELOCITY FT./SEC	ROCK CLASSIFICATION BY WEIGHT
6 - 10	200 LBS.
10 - 12	1/4 TON
12 - 14	1/2 TON
14 - 16	1 TON
16 - 18	2 TON

SELECTION OF RIP RAP (SEE NOTE 1)

NOTES:
1. DIMENSIONS FOR RIP RAP APPLY TO FLOWS < 2 CFS RIP RAP FOR FLOWS > 2 CFS MUST BE DESIGNED BY AN ENGINEER FLOWS > 20 FPS SHALL USE ENERGY DISSIPATOR
2. TYPE OF RIP RAP
   A. REGULAR QUARRY STONE CLASS 50-200
   B. COBBLESTONE
   C. CONCRETE (ONLY ALLOWED UPON APPROVAL OF THE DISTRICT)
3. PLACEMENT
   A. MINIMUM DEPTH = 1 1/2 TIMES AVERAGE STONE SIZE
   B. ROCKS SHALL BE PLACED TO PROVIDE A MINIMUM OF VOIDS.
   C. SURFACE ROCKS OR CONCRETE SHALL PROTRUDE AT LEAST 1/2 THEIR VERTICAL DIMENSION.
   D. RIP RAP IS TO BE PLACED OVER A NATURAL BEDDING, OR IT MAY BE GROUTED OR PLACED OVER A GRAVEL BEDDING AS REQUIRED BY THE CITY.

Storm Sewer Outfall	
West Linn	DATE: JAN 2000
	DRAWING NO. WL-614
	FILE NO. 00-614

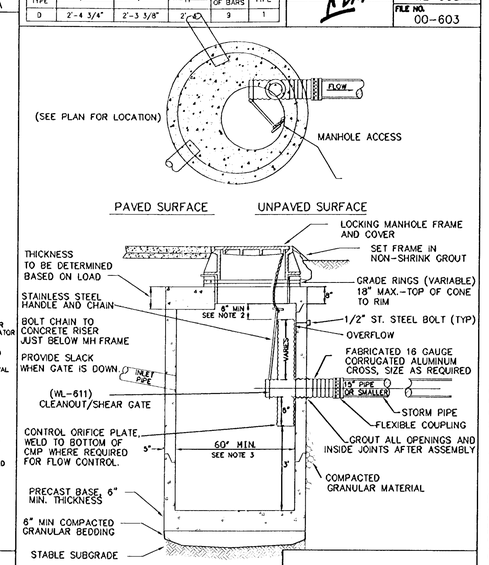

NOTES:
1. ALL PRECAST SECTIONS SHALL CONFORM TO THE REQUIREMENTS OF ASTM C-478.
2. DISTANCE FROM TOP OF OVERFLOW TO MH RIM SHALL BE BASED ON OVERFLOW CAPACITY CALC'S BY DESIGN ENGINEER. ASSUME ORIFICE CONTROL.
3. 72" MINIMUM DIA. MANHOLE REQUIRED FOR OUTLET OR INLET > 21".
4. NO STEPS REQUIRED

Pollution / Flow Control Manhole	
West Linn	DATE: MAY 2005
	DRAWING NO. WL-607
	FILE NO. 00-607

NO.	DATE	BY	REVISION COMMENTS

Design	Drawn	Checked	Date	Initial	Issue Date:
JWL	JWL	MFK	7.20.5		

RECORD DRAWING
BY: Jamie Stevens
DATE: 01/11/09

Permitted design drawings stamped by:
Fares M. Kekhia
Engineer 17447
June 30, 2007

LEGEND HOMES
HOME BUILDER

MATRIX
ENGINEERING, INC.
DEVELOPER

"AS BUILT DRAWING"
DATE 1/16/07 BY

MAXFIELD SUBDIVISION
WEST LINN, OR
STORM DRAIN DETAILS

AS-BUILT PLAN SUBMITTAL - JANUARY 11, 2007

otak
Incorporated

17355 SW Boones Perry Rd.
Lake Oswego, Oregon 97035
Phone: (503) 635-3618
FAX: (503) 635-5395
Internet: WWW.Otak.COM

13227 D227C6.2
Project No. Drawing No.

C6.2
Sheet No.

Copyright 2005 ©

LKO CHADM 03/06/2006 5:30pm ---> R:\DWG\D227C6.2.DWG

XREF LIST
Ltscale: 1
Resolve
D227X01
MFKSTAMP

Standard Fire Hydrant Assembly

NOTES:

1. HYDRANTS TO BE MUELLER CENTURION MDL A-423 ONLY WITH 1 1/2" OPER. NUTS OR CLOW MEDDALION F-2545.
2. HYDRANT COLOR TO BE MILLER EQUIP. ENAMEL O E 40 (SAFETY YELLOW).
3. JOINTS TO BE RESTRAINED BY 3/4" DIA. CALVANIZED STEEL RODS AND THRUST BLOCKS OR MECA LUGS AND THRUST BLOCKS.
4. ALL FITTINGS IN CONTACT W/CONCRETE SHALL BE WRAPPED IN PLASTIC. HYDRANT DRAIN HOLES TO REMAIN OPEN TO DRAIN ROCK AND OPERATIONAL.
5. MIN. 4 CU. FT. OF 1 1/2"-3/4" CLEAN DRAIN ROCK SHALL BE PLACED AROUND SHOE UP TO A MIN. OF 6" ABOVE DRAIN OUTLETS.
6. WHERE PLANTER STRIP EXISTS, HYDRANT SHALL BE PLACED SO FRONT PORT IS A MINIMUM OF 24" BEHIND FACE OF CURB.
7. WHERE INTEGRAL S/W & CURB EXISTS, HYD. SHALL BE PLACED AT BACK OF SIDEWALK, OR AS DIRECTED BY ENGINEER.
8. BURY OF HYDRANT SHALL BE MEASURED FROM FINISHED GRADE TO BOTTOM OF CONNECTING PIPE.
9. THRUST BLOCK AT FIRE HYDRANT TEE SHALL HAVE A 3.7 SQ. FT. BEARING AREA.
10. HYDRANT VALVE SHALL BE MUELLER RESILIENT WEDGE GATE VALVE #A-2360-18 ONLY.
11. WHERE NO SIDEWALK EXISTS, PLACE A 5'x 5'x 4" THICK A.C. OR CONC. APRON AROUND HYDRANT.
12. NO EXTENTIONS ALLOWED.

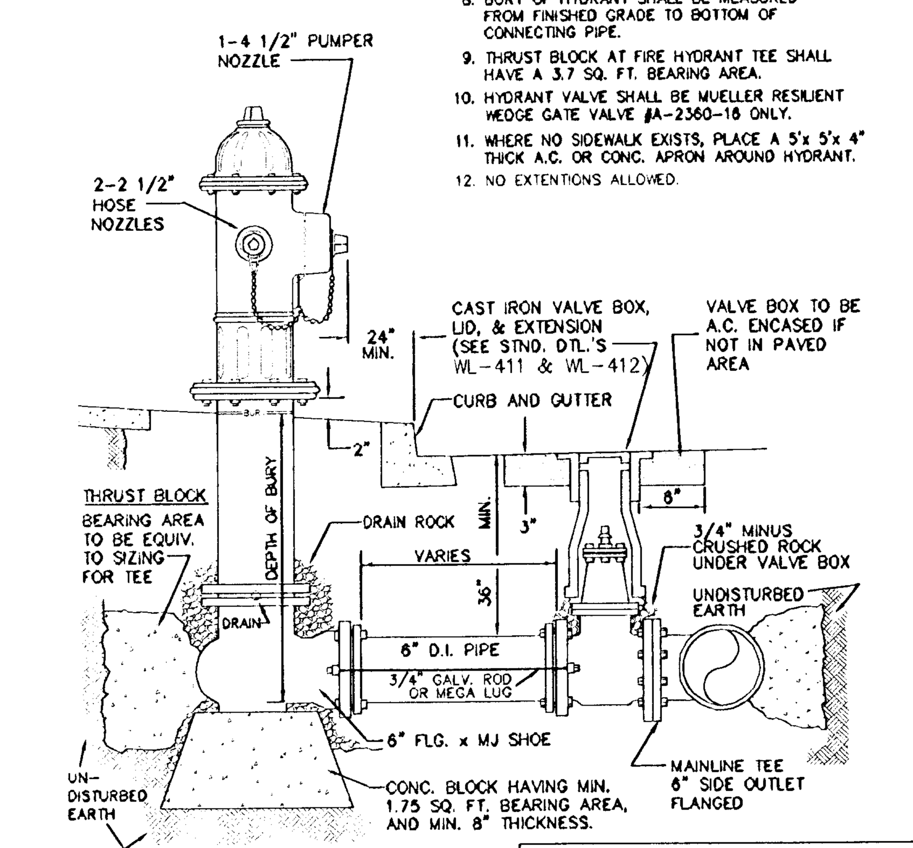

Standard Fire Hydrant Assembly

West Linn	DATE: JAN 2000
	DRAWING NO. WL-401
	FILE NO. 00-401

Standard 1" Water Service

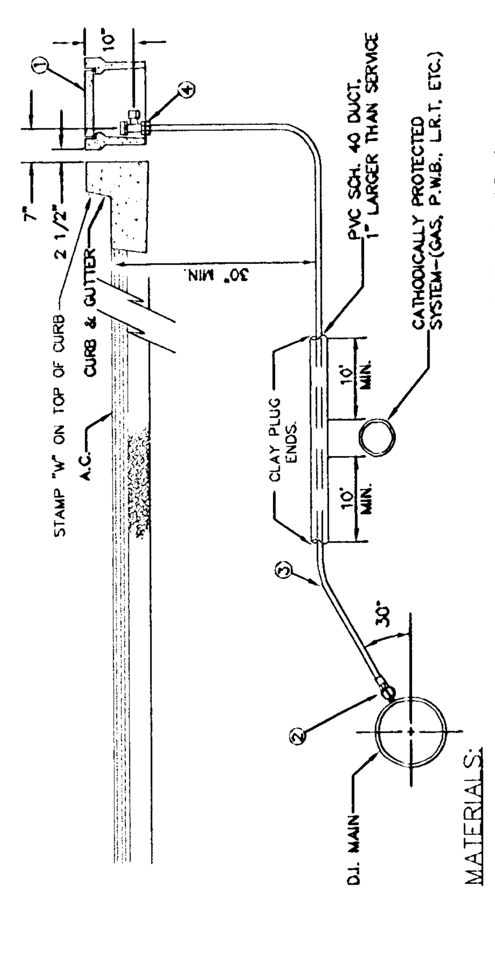

MATERIALS:

1. BROOKS METER BOX, BODY NO. 37, LID AND COVER NO. 37-S.
2. MUELLER CORP. STOP NO. H-15008 OR FORD F1000-4Q SET CORP. STOP WITH OPERATING NUT AT 3 OR 9 O'CLOCK.
3. 1" SOFT TEMPER, TYPE 'K' COPPER TUBING COMPLYING WITH ASTM B-88.
4. MUELLER ANGLE METER STOP NO. H-14258 (FORD NO. KV43-444W-Q).

NOTES:

1. MACHINE DRILLED AND TAPPED ONLY. NO HAND DRILLING IS ALLOWED.
1. SUBSTITUTES FOR ANY MATERIALS SHOWN SHALL BE APPROVED BY THE CITY ENGINEER.
2. ALL PIPE AND STRUCTURE ZONES SHALL BE BACKFILLED USING 3/4" MINUS CRUSHED AGG. AND COMPACTED TO 95% MAX DENSITY AS DETERMINED BY AASHTO T-180.
3. WHEN AN ACTIVE CATHODIC PROTECTED SYSTEM IS ENCOUNTERED, SCH. 40 PVC SHALL BE INSTALLED AS SHOWN ABOVE WITH CLAY PLUG.
4. METER BOX SHALL BE CENTERED OVER THE COMPLETED METER ASSEMBLY.
5. FOR VACANT RESIDENTIAL LOTS, LOCATE SINGLE SERVICE 18" INSIDE SIDE LOT LINE.
6. TAPS INTO MAIN TO BE AT 18" CENTERLINE MIN.
7. ANGLE METER STOPS TO BE 18" FROM PROPERTY LINE AND NOT IN DRIVEWAY APPROACH.

Standard 1" Water Service

West Linn	DATE: MAY 2005
	DRAWING NO. WL-402
	FILE NO. 00-402

Standard 2" Blow-off Assembly

BLOW-OFF SIZES REQUIRED

MAIN SIZE	BLOW-OFF SIZE
4" TO 6"	2"
8" TO 12"	4"
14" TO 18"	6"
20" & UP	PER ENGR.

NOTES:

1. VALVE BOX SHALL BE PER STANDARD DETAIL WL-411.
2. VALVE BOX TO BE CONCRETE ENCASED AS SHOWN, IF NOT IN PAVED AREA.
3. BLOW-OFF UNIT SHALL BE BACKFILLED WITH 3/4"-0" CRUSHED ROCK AND COMPACTED TO 95% OF MAX. DENSITY DETERMINED BY AASHTO T-180.
4. PLACE BLOW-OFF STANDPIPE 3 FT. INSIDE R.O.W. LINE AT END OF STREET (2 FT. FROM BARRICADE).

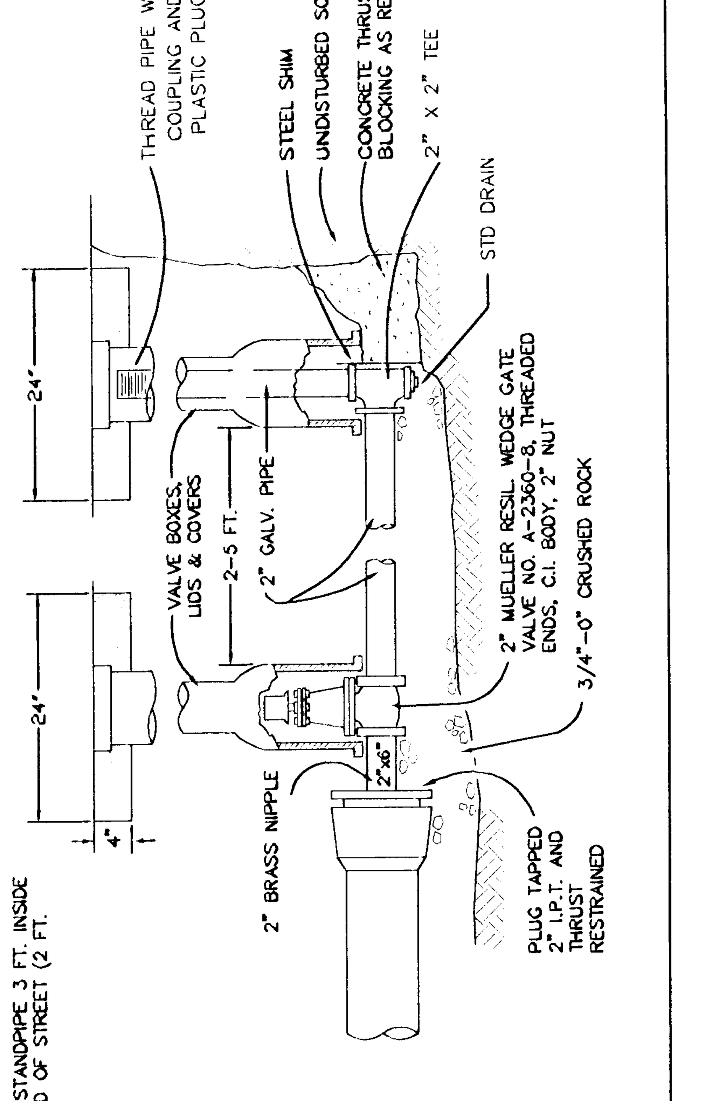

Standard 2" Blow-off Assembly

West Linn	DATE: MAY 2005
	DRAWING NO. WL-404A
	FILE NO. 00-404A

Standard Air Release Valve Unit

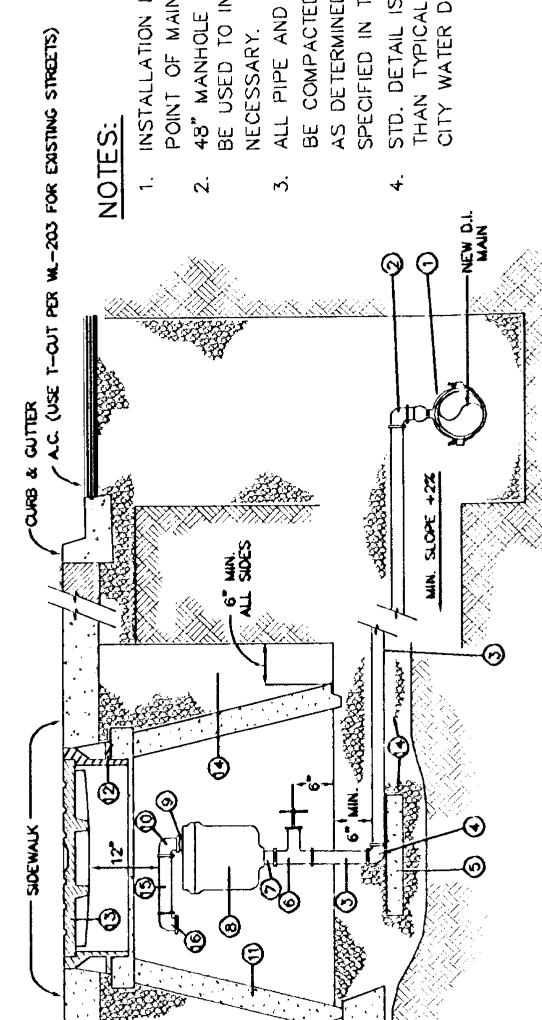

NOTES:

1. INSTALLATION LOCATED AT HIGH POINT OF MAIN
2. 48" MANHOLE BARREL SECTIONS SHALL BE USED TO INCREASE DEPTH IF NECESSARY.
3. ALL PIPE AND STRUCTURE ZONES SHALL BE COMPACTED TO 95% OF MAX. DENSITY AS DETERMINED BY AASHTO T-180 OR AS SPECIFIED IN THE CONTRACT DOCUMENTS.
4. STD. DETAIL IS NOT FOR SHALLOWER THAN TYPICAL INSTALLATIONS. CONTACT CITY WATER DEPT. FOR OPTIONS.

MATERIALS:

1. ROCKWELL NO. 317 SERVICE SADDLE WITH STAINLESS STRAPS
2. MUELLER NO. H15045 2" CORPORATION STOP WITH 1/4 BEND ADAPT (I.P.T. MUELLER 110 CTS)
3. 2" X VARIABLE LENGTH BRASS I.P.T. NIPPLE
4. 2" BRASS 90 DEGREE ELL (MUELLER 110 CTS)
5. 12" X 12" X 4" CONCRETE BLOCK
6. NIBCO NO. 113 2" BRASS GATE VALVE
7. 2" X 3" BRASS I.P.T. NIPPLE
8. 2" AIR RELEASE VALVE (VAL-MATIC #38 OR APCO #205 FOR TYPICAL INSTALLATIONS, IN SOME INSTANCES THE CITY MAY REQUIRE COMBINATION AIR RELEASE & VACUUM UNIT.) INSTALL WALL BRACKETS TO SUPPORT VALVE AS NECESSARY.
9. 1/2" X 1 1/2" OR 2" X 1 1/2" BRASS I.P.T. NIPPLE
10. 1/2" OR 2" BRASS 90 DEGREE ELL (F.M. I.P.T. X F.M. I.P.T.)
11. STD. 48" CONCRETE MANHOLE CONE
12. FRAME PER STD. DWG. WL-214.
13. TAMPERPROOF MANHOLE COVER PER STD. DWG. WL-214.
14. 3/4" MINUS CRUSHED AGG.
15. 1/2" X 6" OR 2" X 6" BRASS NIPPLE, I.P.T.
16. 1/2" OR 2" BRASS 90 DEGREE ELL WITH SCREEN ON OUTLET
17. 3 EA. 12" CONCRETE PIER BLOCKS

Standard Air Release Valve Unit

West Linn	DATE: JAN 2000
	DRAWING NO. WL-405
	FILE NO. 00-405

Horizontal Thrust Blocking

FITTING SIZE (Inches)	TEE, WYE, & ① HYDRANTS	STRADDLE BLOCK ②	90° BEND ③ PLUGGED CROSS TEE PLUGGED-RUNS	45° BEND ④	22 1/2° BEND ④	11 1/2° BEND ④
2	*	*	*	*	*	*
4	1.7	2.1	2.4	1.3	*	*
6	3.7	4.9	5.3	2.9	1.5	*
8	6.7	8.7	9.5	5.1	2.7	1.3
10	10.5	13.6	14.8	8	4.1	2
12	15.1	19.6	21.3	11.6	5.9	2.9
14						
16	26.8	34.8	37.9	20.5	10.4	5.2
18	33.9	44	47.9	25.9	12.8	6.7
LARGER	**	**	**	**	**	**
BEARING AREA OF THRUST BLOCKS (sq. ft.)						

1. ALL VALUES ARE BASED ON THE FOLLOWING ASSUMPTIONS: AVG. PRESSURE = 100 PSI X 2 (safety factor); 1500 PSF SOIL BEARING CAPACITY; NORMAL DISTRIBUTION DESIGN VELOCITY NOT TO EXCEED 5 F/S.
2. ALL FITTINGS SHALL BE WRAPPED IN PLASTIC PRIOR TO PLACEMENT OF CONCRETE.
3. BEARING SURFACE OF THRUST BLOCKING SHALL BE AGAINST UNDISTURBED SOIL
4. ALL CONCRETE MIX SHALL HAVE A MIN. 28 DAY STRENGTH OF 3000 PSI.
5. ALL PIPE ZONES SHALL BE GRAVEL FILLED AND COMPACTED.
6. THRUST BLOCKS FOR PLUGGED CROSS AND PLUGGED TEE SHALL HAVE #4 REBAR LIFTING LOOPS INSTALLED AS SHOWN.
7. VERTICAL THRUST DETAILS-SEE DWG. WL-407.
8. STRADDLE BLOCK DETAILS-SEE DWG. WL-408.

* BLOCK TO UNDISTURBED TRENCH WALLS

** THRUST BLOCKS FOR PIPES LARGER THAN 18" WILL BE INDIVIDUALLY DESIGNED BY THE ENGINEER.

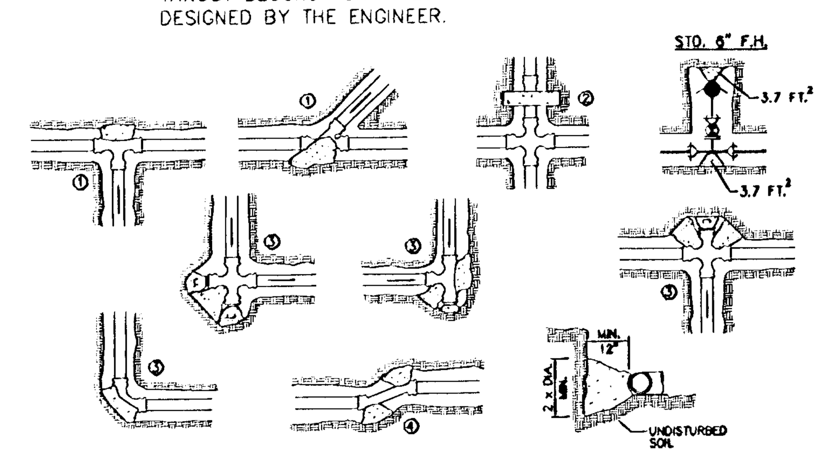

Horizontal Thrust Blocking

West Linn	DATE: JAN 2000
	DRAWING NO. WL-406
	FILE NO. 00-406

Standard Valve Box Detail

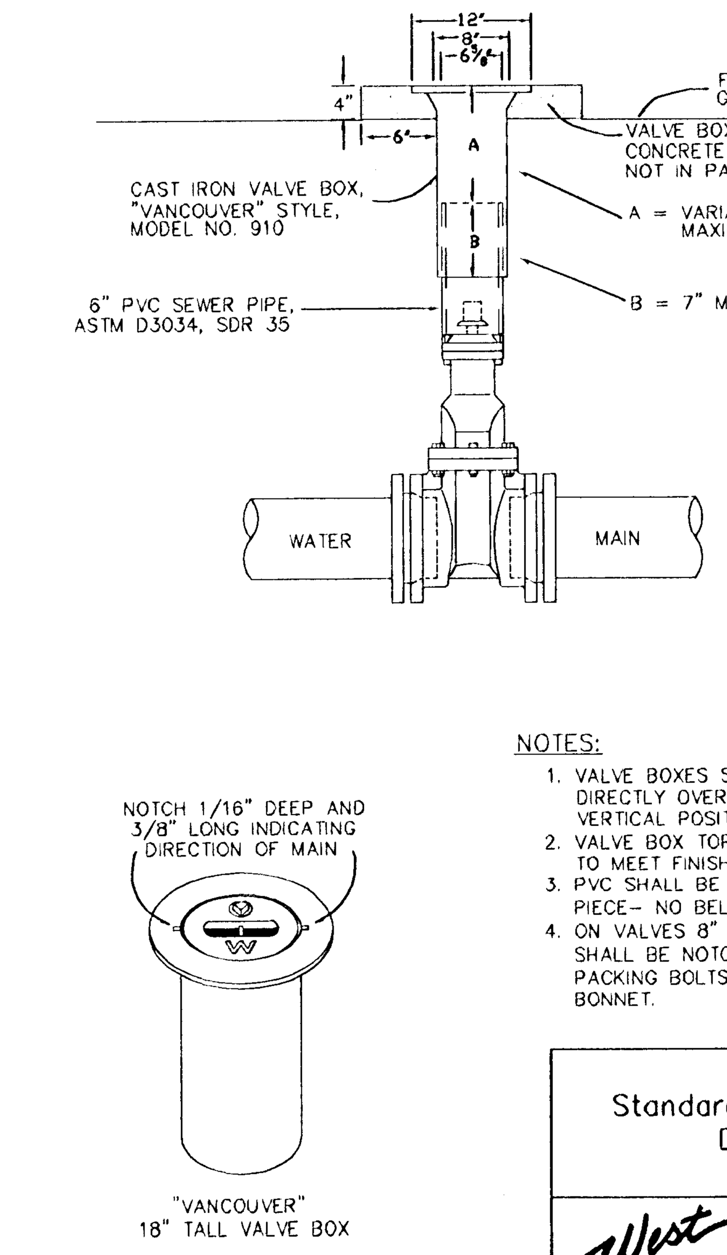

NOTES:

1. VALVE BOXES SHALL BE CENTERED DIRECTLY OVER THE VALVE NUT IN A VERTICAL POSITION.
2. VALVE BOX TOP SHALL BE ADJUSTED TO MEET FINISHED GRADE.
3. PVC SHALL BE ONE CONTINUOUS PIECE- NO BELLS OR COUPLERS.
4. ON VALVES 8" AND LARGER, PVC SHALL BE NOTCHED OVER VALVE PACKING BOLTS SO PVC SITS ON BONNET.

Standard Valve Box Detail

West Linn	DATE: JAN 2000
	DRAWING NO. WL-411
	FILE NO. 00-411

Standard Valve Box Detail for 4" or Larger Blow-offs

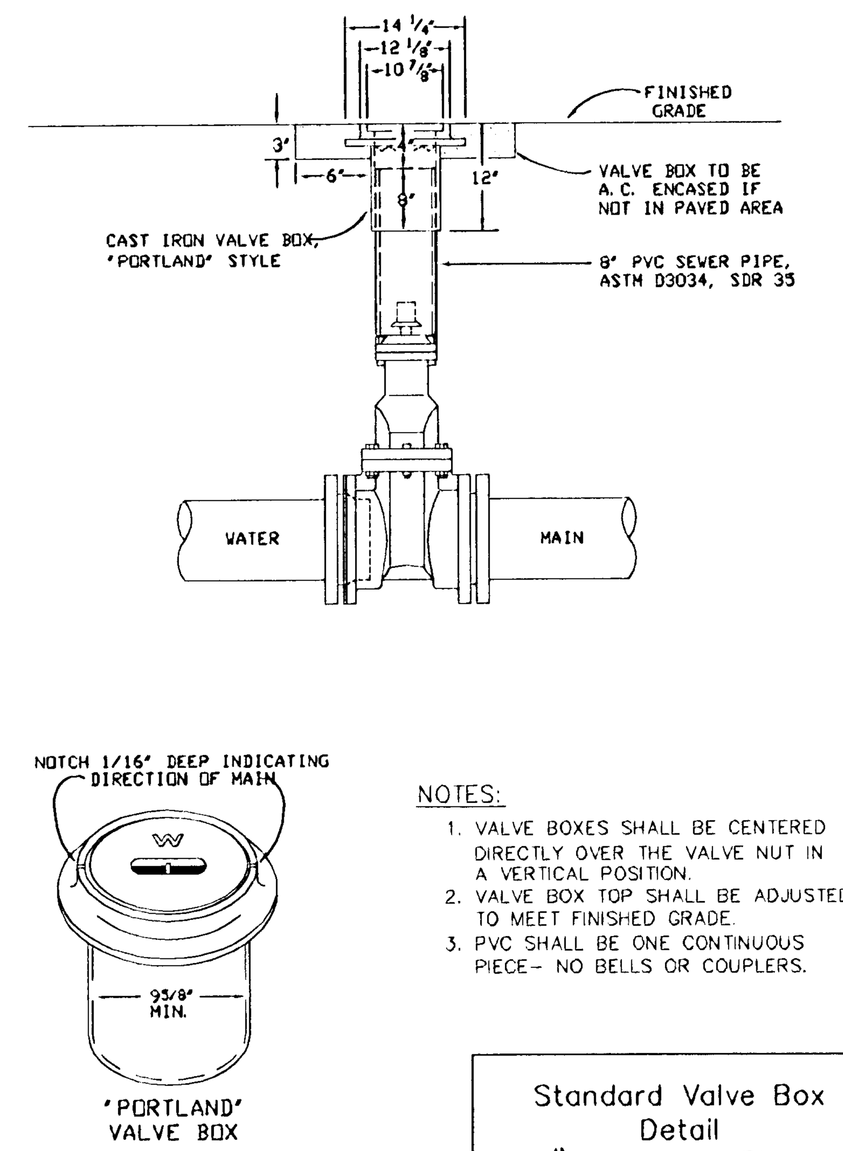

NOTES:

1. VALVE BOXES SHALL BE CENTERED DIRECTLY OVER THE VALVE NUT IN A VERTICAL POSITION.
2. VALVE BOX TOP SHALL BE ADJUSTED TO MEET FINISHED GRADE.
3. PVC SHALL BE ONE CONTINUOUS PIECE- NO BELLS OR COUPLERS.

Standard Valve Box Detail for 4" or Larger Blow-offs

West Linn	DATE: JAN 2000
	DRAWING NO. WL-412
	FILE NO. 00-412

NO.	DATE	BY	REVISION COMMENTS

Design	Drawn	Checked	Date	Initial Issue Date:
JML	JML	MFK	7.20.5	

RECORD DRAWING
BY: [signature]
DATE: 01/11/07

Permitted design drawings stamped by:
Fares M. Kekhia
Engineer 17447
June 30, 2007

LEGEND HOMES
HOME BUILDER

MATRIX
DEVELOPER

"AS BUILT DRAWING"
DATE 1/11/07 BY [signature]

AS-BUILT PLAN SUBMITTAL - JANUARY 11, 2007

MAXFIELD SUBDIVISION
WEST LINN, OR
WATER DETAILS

otak
Incorporated
17355 SW Boones Ferry Rd.
Lake Oswego, Oregon 97035
Phone: (503) 635-3618
FAX: (503) 635-5395
Internet: WWW.Otak.COM

13227	D227C6.3
Project No.	Drawing No.

C6.3
Sheet No.

Copyright 2005 ©

LKO: CHADM 03/06/2006 5:30pm --> R:\DWG\D227C6.3.DWG

XREF LIST
Ltscale: 1
Resolve
D227X0-1
MFKSTAMP

GeoPacific Engineering
7312 SW Durham Road
Portland, Oregon 97224
Tel: (503) 598-8445 Fax: (503) 598-8705

FILL SLOPE DETAIL

TYPICAL KEYWAY, BENCHING & FILL SLOPE DESIGN

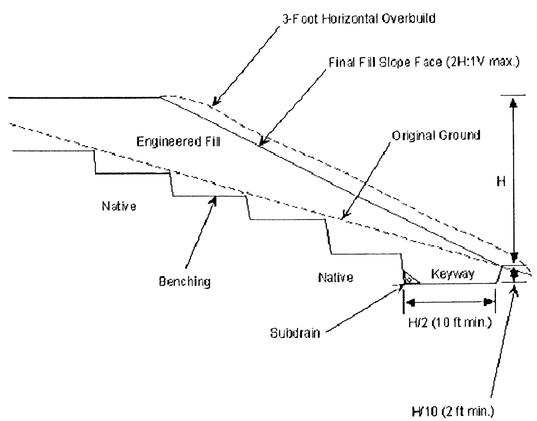

Recommended subdrain is minimum 3-inch-diameter ADS Heavy Duty grade (or equivalent), perforated plastic pipe enveloped in a minimum of 3 cubic feet per lineal foot of 2" to 1/2" open-graded gravel drain rock wrapped with geotextile filter fabric (Mirafi 140N or equivalent).

Project: Sabo Property Subdivision West Linn, Oregon	Project No. 05 - 9118	FIGURE 3

GeoPacific Engineering
7312 SW Durham Road
Portland, Oregon 97224
Tel: (503) 598-8445 Fax: (503) 598-8705

Maxfield Estates
Project No. 05-9118

ROCKERY WALL DETAIL

MAXIMUM WALL HEIGHT (H) = 10 FEET

DRAWING NOT TO SCALE

D is distance from base of boulder to top of wall (D = H for toe boulder)

ROCK SIZE SCHEDULE (See note 4 below)

D (FT)	MIN. WT. (LBS.)	TYPICAL SIZE (IN.)
1	1,000	32 X 27 X 20 24 X 23 X 23
3	1,800	40 X 28 X 20 38 X 27 X 27
5	2,800	48 X 32 X 22 40 X 29 X 29
7	4,000	54 X 34 X 24 48 X 42 X 42
9	6,000	58 X 42 X 42 64 X 34 X 24

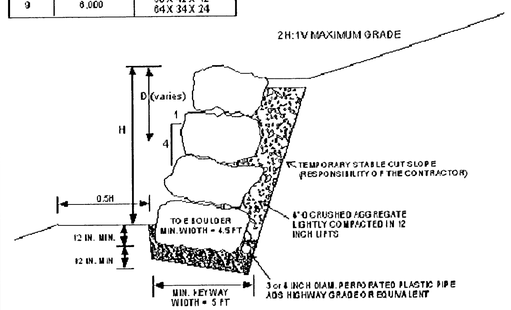

CONSTRUCTION NOTES:

1. Keyway embedment should be verified by GeoPacific Engineering, Inc.
2. Rocks should have a cubical, tabular, or semi-rectangular shape that roughly matches the space created by the previous rock course. Rocks should be laid tilting slightly downward toward the back of the wall with the long dimension perpendicular to the wall face (resting towards the excavation face). Rocks should be staggered such that each rock bears on at least two rocks below and vertical joints are discontinuous. Rock placement and wall integrity should be checked by bulldozer tilting, hammering on the top of each rock with excavator bucket.
3. Minimum rock size should be determined using the ROCK SIZE SCHEDULE above, where D is the distance from the base of the rock to be placed to the top of the wall. Rocks should be no smaller than 1,000 lbs.
4. Voids greater than 6 inches wide where there is no contact between adjacent rocks should be chinked with a small rock.
5. Backfill behind the rocks should consist of an average 12-inch-wide layer of 6"-0 crushed aggregate with no more than 7% fines passing the U.S. Standard No. 200 sieve. Backfill should be placed in 12 inch lifts and lightly compacted to avoid rocking stable as each course of rocks is placed.

GeoPacific Engineering
7312 SW Durham Road
Portland, Oregon 97224
Tel: 503.598.8445 Fax 503.598.8705

KEYSTONE WALL TYPICAL DETAIL

Keystone MSE Wall with Surcharge
Retained Height = 4 to 14 Feet

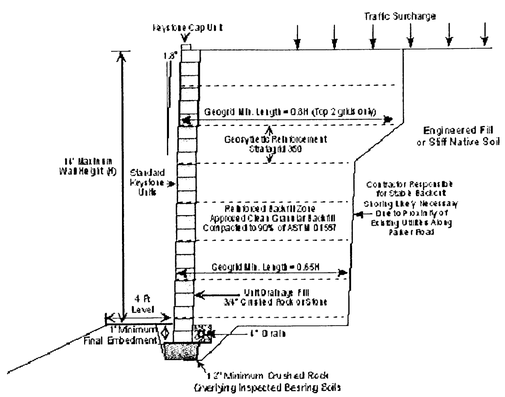

NOTES:
1. Wall Height (H) is the retained height.
2. Minimum wall embedment is 1 foot.
3. Unit core fill and leveling pad shall consist of 3/4" - 0 crushed aggregate.
4. Backfill in reinforced zone to consist of imported granular soil as approved by the geotechnical engineer.
5. Geotechnical Engineer should review subgrade soils.
6. Geogrids must be of appropriate type and length per the design calculations.
7. Finish grade must provide positive drainage.

Date: 09/29/05
Drawn by: EJK

Project: Maxfield Estates West Linn, Oregon	Project No. 05-9112	FIGURE 1

GeoPacific Engineering
7312 SW Durham Road
Portland, Oregon 97224
Tel: 503.598.8445 Fax 503.598.8705

KEYSTONE WALL TYPICAL DETAIL

Keystone MSE Wall with Slope
Retained Height = 4 to 10 Feet

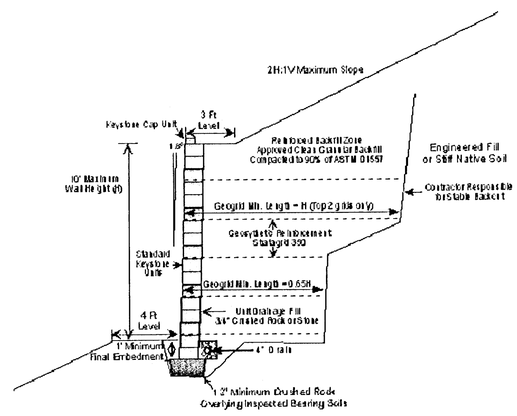

NOTES:
1. Wall Height (H) is the retained height.
2. Minimum wall embedment is 1 foot.
3. Unit core fill and leveling pad shall consist of 3/4" - 0 crushed aggregate.
4. Backfill in reinforced zone to consist of imported granular soil as approved by the geotechnical engineer.
5. Geotechnical Engineer should review subgrade soils.
6. Geogrids must be of appropriate type and length per the design calculations.
7. Finish grade must provide positive drainage.

Date: 10/05/05
Drawn by: EJK

Project: Maxfield Estates West Linn, Oregon	Project No. 05-9118	FIGURE 1

NO.	DATE	BY	REVISION COMMENTS

		Date	Initial Issue Date:
Design	Drawn	Checked	
	JML	MFK	7.20.5

RECORD DRAWING
BY: Darren Stone
DATE: 01/11/07

Permitted design drawings stamped by:
Fares M. Kekhia
Engineer 17447
June 30, 2007

LEGEND HOMES — HOME BUILDER
MATRIX — DEVELOPER

"AS BUILT DRAWING"
DATE 1/11/07 BY Darren Stone

AS-BUILT PLAN SUBMITTAL – JANUARY 11, 2007

MAXFIELD SUBDIVISION

WEST LINN, OR
DETAILS FROM GEOPACIFIC

otak Incorporated

17355 SW Boones Ferry Rd.
Lake Oswego, Oregon 97035
Phone: (503) 635-3618
FAX: (503) 635-5395
Internet: WWW.Otak.COM

13227 D227C6.4
Project No. Drawing No.

C6.4
Sheet No.

Copyright 2005 ©

LKO CHADM 03/06/2006 5:31pm --> R:\DWG\D22706.4.DWG

XREF LIST
Ltscale: 1
Resolved
D227X400
D227X001
MFKSTAMP
D227X230
D227X430
D227X380
D227X600

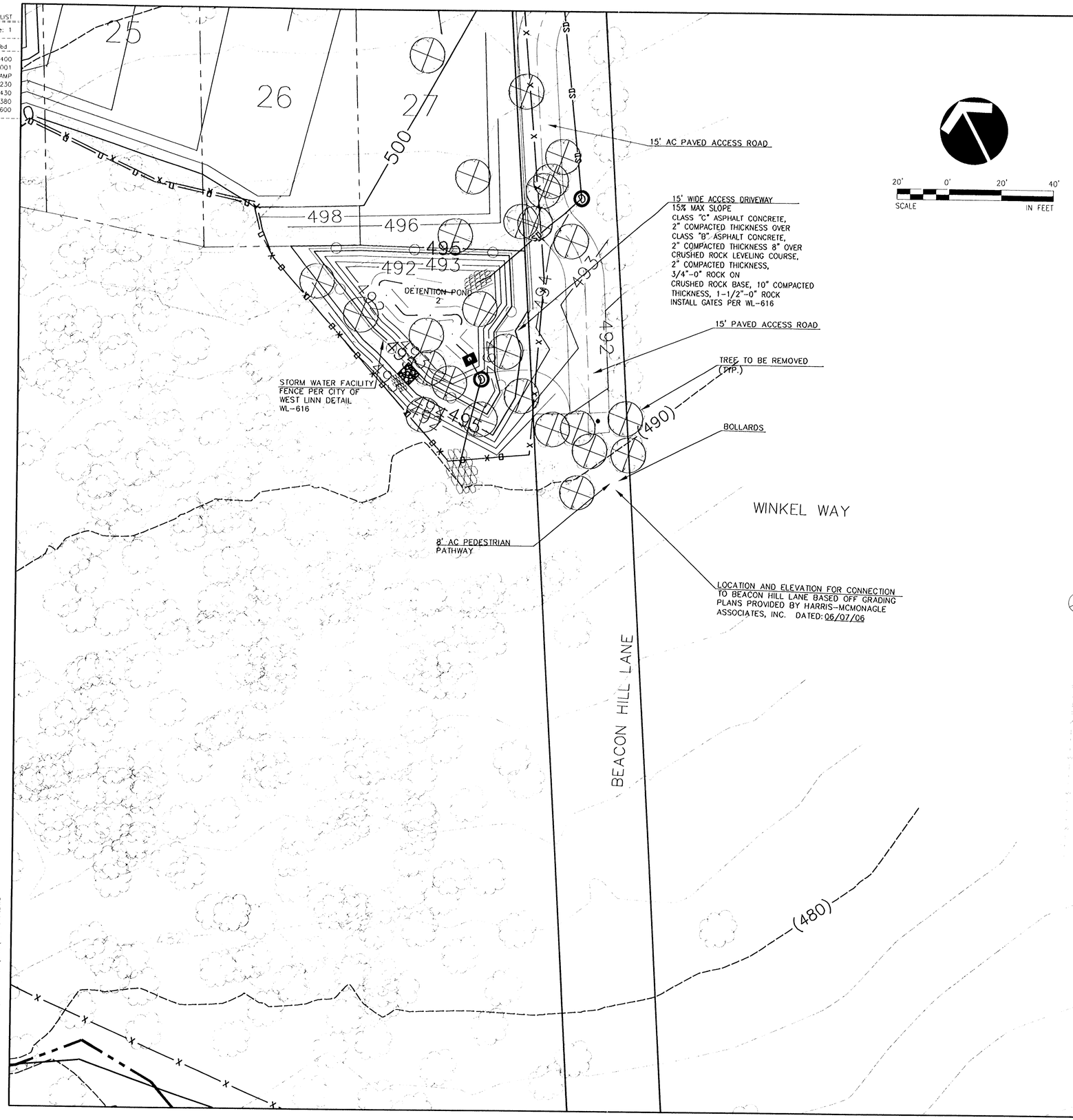

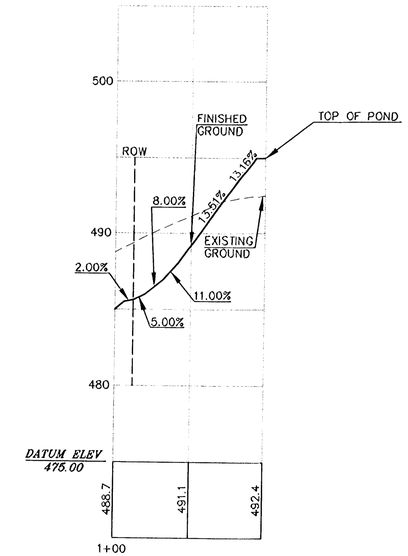

PROFILE FOR HAMMERHEAD TO POND 2

SCALE: HORIZONTAL 1"=50'
VERTICAL 1"=5'

NOTE:
TREES TO BE REMOVED =

NO.	DATE	BY	REVISION COMMENTS

Design	Drawn	Checked	Date
CLM	CLM	DBS	9.19.06

Initial Issue Date

RECORD DRAWING
BY: [illegible]
DATE: 01/11/07

Permitted design drawings stamped by:
Fares M. Kekhia
Engineer 17447
June 30, 2007

LEGEND HOMES
HOME BUILDER

MATRIX DEVELOPMENT CORPORATION
DEVELOPER

"AS BUILT DRAWING"
DATE 1/11/07 BY [illegible]

AS-BUILT PLAN SUBMITTAL - JANUARY 11, 2007

MAXFIELD SUBDIVISION

WEST LINN, OR
HAMMERHEAD PLAN/PROFILE (POND 2)

otak
Incorporated
17355 SW Boones Ferry Rd.
Lake Oswego, Oregon 97035
Phone: (503) 635-3818
FAX: (503) 635-5395
Internet: WWW.Otak.COM

13227 D227C7.1
Project No. Drawing No.

C7.1
Sheet No.

Copyright 2005 ©

LKO: LISAB 01/11/2007 4:14pm -->R:\DWG\D227C7.1.DWG

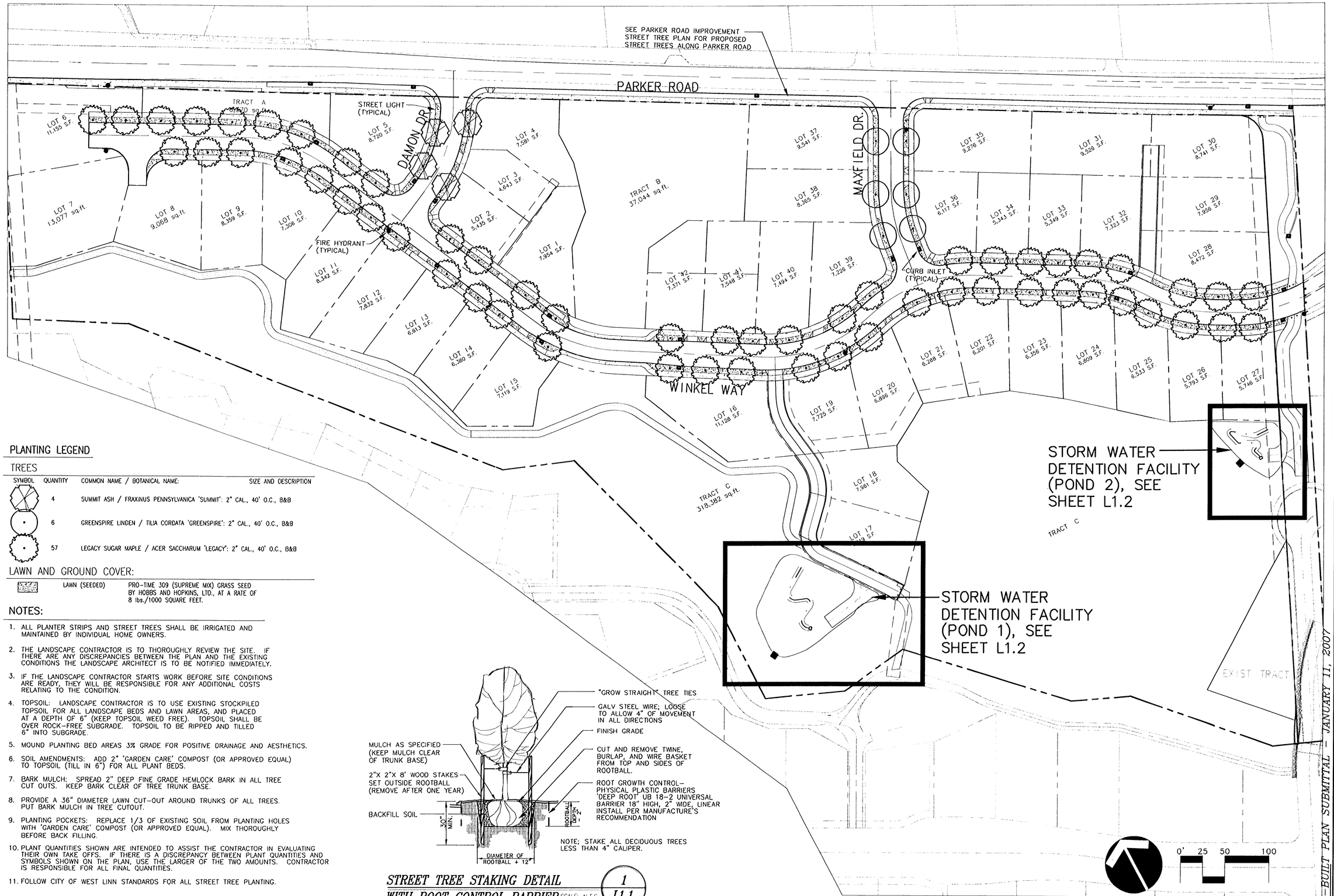

PLANTING LEGEND

TREES

SYMBOL	QUANTITY	COMMON NAME / BOTANICAL NAME:	SIZE AND DESCRIPTION
	4	SUMMIT ASH / FRAXINUS PENNSYLVANICA 'SUMMIT':	2" CAL., 40' O.C., B&B
	6	GREENSPIRE LINDEN / TILIA CORDATA 'GREENSPIRE':	2" CAL., 40' O.C., B&B
	57	LEGACY SUGAR MAPLE / ACER SACCHARUM 'LEGACY':	2" CAL., 40' O.C., B&B

LAWN AND GROUND COVER:

	LAWN (SEEDED)	PRO-TIME 309 (SUPREME MIX) GRASS SEED BY HOBBS AND HOPKINS, LTD., AT A RATE OF 8 lbs./1000 SQUARE FEET.

NOTES:

1. ALL PLANTER STRIPS AND STREET TREES SHALL BE IRRIGATED AND MAINTAINED BY INDIVIDUAL HOME OWNERS.
2. THE LANDSCAPE CONTRACTOR IS TO THOROUGHLY REVIEW THE SITE. IF THERE ARE ANY DISCREPANCIES BETWEEN THE PLAN AND THE EXISTING CONDITIONS THE LANDSCAPE ARCHITECT IS TO BE NOTIFIED IMMEDIATELY.
3. IF THE LANDSCAPE CONTRACTOR STARTS WORK BEFORE SITE CONDITIONS ARE READY, THEY WILL BE RESPONSIBLE FOR ANY ADDITIONAL COSTS RELATING TO THE CONDITION.
4. TOPSOIL: LANDSCAPE CONTRACTOR IS TO USE EXISTING STOCKPILED TOPSOIL FOR ALL LANDSCAPE BEDS AND LAWN AREAS, AND PLACED AT A DEPTH OF 6" (KEEP TOPSOIL WEED FREE). TOPSOIL SHALL BE OVER ROCK-FREE SUBGRADE. TOPSOIL TO BE RIPPED AND TILLED 6" INTO SUBGRADE.
5. MOUND PLANTING BED AREAS 3% GRADE FOR POSITIVE DRAINAGE AND AESTHETICS.
6. SOIL AMENDMENTS: ADD 2" 'GARDEN CARE' COMPOST (OR APPROVED EQUAL) TO TOPSOIL (TILL IN 6") FOR ALL PLANT BEDS.
7. BARK MULCH: SPREAD 2" DEEP FINE GRADE HEMLOCK BARK IN ALL TREE CUT OUTS. KEEP BARK CLEAR OF TREE TRUNK BASE.
8. PROVIDE A 36" DIAMETER LAWN CUT-OUT AROUND TRUNKS OF ALL TREES. PUT BARK MULCH IN TREE CUTOUT.
9. PLANTING POCKETS: REPLACE 1/3 OF EXISTING SOIL FROM PLANTING HOLES WITH 'GARDEN CARE' COMPOST (OR APPROVED EQUAL). MIX THOROUGHLY BEFORE BACK FILLING.
10. PLANT QUANTITIES SHOWN ARE INTENDED TO ASSIST THE CONTRACTOR IN EVALUATING THEIR OWN TAKE OFFS. IF THERE IS A DISCREPANCY BETWEEN PLANT QUANTITIES AND SYMBOLS SHOWN ON THE PLAN, USE THE LARGER OF THE TWO AMOUNTS. CONTRACTOR IS RESPONSIBLE FOR ALL FINAL QUANTITIES.
11. FOLLOW CITY OF WEST LINN STANDARDS FOR ALL STREET TREE PLANTING.

NOTE; STAKE ALL DECIDUOUS TREES LESS THAN 4" CALIPER.

STREET TREE STAKING DETAIL WITH ROOT CONTROL BARRIER SCALE: N.T.S. — 1 / L1.1

NO.	DATE	BY	REVISION COMMENTS

Design Drawn Checked Date Initial Issue Date:
DD DD MFK 1/06

BY: Dawn B. Davis
DATE: 01/11/07

Permitted design drawings stamped by:
W. David Dryer
Landscape Architect
330

LEGEND HOMES — HOME BUILDER

MATRIX DEVELOPMENT CORPORATION — DEVELOPER

"AS BUILT DRAWING"
DATE 1/11/07 BY [illegible]

MAXFIELD SUBDIVISION
WEST LINN, OR
STREET TREE PLAN

otak Incorporated
17355 SW Boones Ferry Rd.
Lake Oswego, Oregon 97035
Phone: (503) 635-3618
FAX: (503) 635-5395
Internet: WWW.Otak.COM

13227 — Project No.
L227P001 — Drawing No.
L1.1 — Sheet No.

AS-BUILT PLAN SUBMITTAL - JANUARY 11, 2007

Copyright 2005 ©

REF LIST
tscale: 50
Resolved
)227X001
)227X190
)227X230
227X700
)227X600
Unresolved
MFKSTAMP
LKG: CHADM 01/11/2007 5:02pm --> R:\DWG\L227P001.DWG

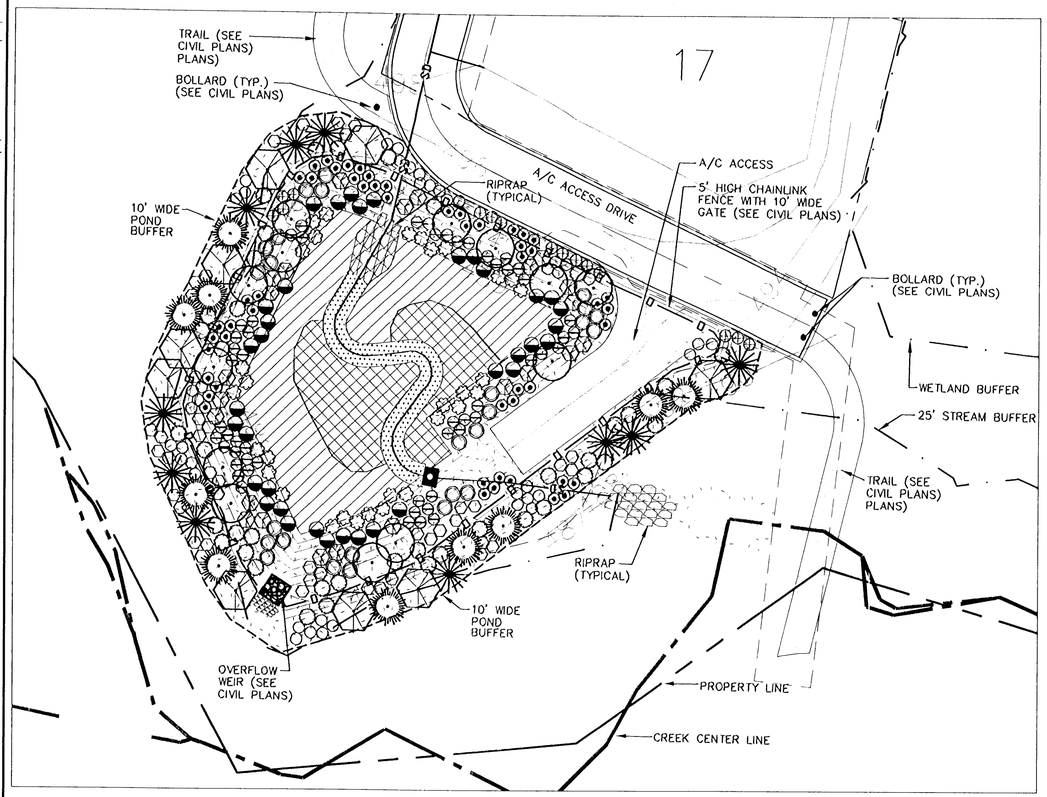

STORM WATER DETENTION FACILITY (POND 1 WITH GRASSY SWALE)

(11,710 S.F. POND PLANTABLE AREA INCLUDING 10 FOOT BUFFER / 600 S.F. GRASSY SWALE AREA)

0' 10' 20' 40'

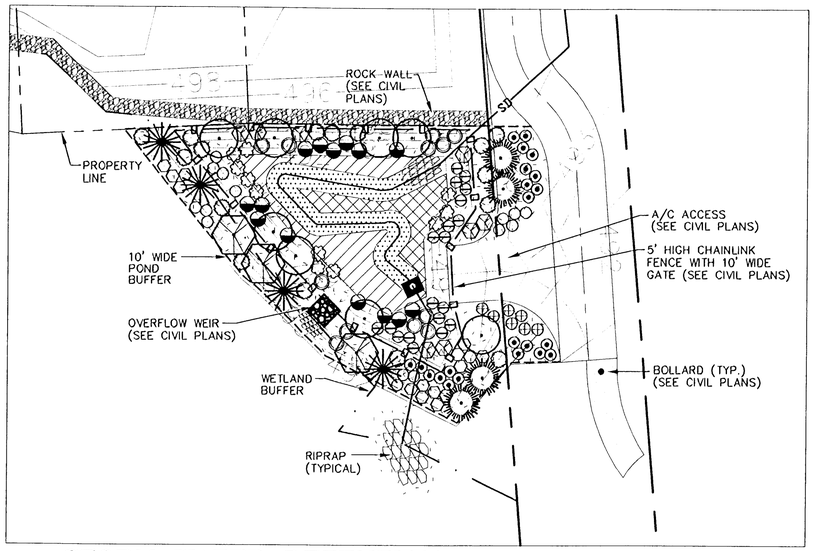

STORM WATER DETENTION FACILITY (POND 2 WITH GRASSY SWALE)

(4,596 S.F. POND PLANTABLE AREA INCLUDING 10 FOOT BUFFER / 600 S.F. GRASSY SWALE AREA)

0' 10' 20' 40'

PLANTING LEGEND

TREES

SYMBOL	QUANTITY	COMMON NAME / Botanical name:	SIZE & DESCRIPTION
	14	WESTERN RED CEDAR / Thuja plicata:	6' HT., B&B
	14	DOUGLAS FIR / Psuedotsuga menziesii:	6' HT., B&B
	21	OREGON ASH / Fraxinus latifolia:	1 1/2" CALIPER
	12	BIG LEAF MAPLE / Acer macrophyllum:	1 1/2" CALIPER
TOTAL	61	(POND/SWALE 1 = 42 TREES) (POND/SWALE 2 = 19 TREES)	

LARGE SHRUBS

50	RED OSIER DOGWOOD / Cornus stolonifera:	3 GALLON
31	PACIFIC NINEBARK / Physocarpus capitus:	3 GALLON
42	SCOULER WILLOW / Salix scouleriana:	3 GALLON
57	VINE MAPLE / ACER CIRCINATUM:	3 GALLON
37	RED ELDERBERRY / Sambucus racemosa:	3 GALLON
TOTAL 217	(POND/SWALE 1 = 156 SHRUBS) (POND/SWALE 2 = 61 SHRUBS)	

SHRUBS

73	WESTERN SPIRAEA / Spiraea douglasii:	1 GALLON
72	NOOTKA ROSE / Rosa nutkana:	1 GALLON
58	TALL OREGON GRAPE / Mahonia aquifolium:	1 GALLON
58	RED FLOWERING CURRANT / Ribes sanguineum:	1 GALLON
65	SNOWBERRY / Symphoricarpus albus:	1 GALLON
TOTAL 326	(POND/SWALE 1 = 234 SHRUBS) (POND/SWALE 2 = 92 SHRUBS)	

GRASS SEED MIXES AND EMERGENT PLANTS

CITY OF PORTLAND GRASSY SWALE SEED MIX, 10–30 LBS. PER ACRE.
(SWALE 1: 600 S.F./0.01 ACRES)
(SWALE 2: 600 S.F./0.01 ACRES)

- MEADOW BARLEY — 20%
- BLUE WILDRYE — 20%
- SITKA OR CALIFORNIA BROME — 20%
- AMERICAN SLOUGHGRASS — 20%
- WATER FOXTAIL — 10%
- SPIKE BENTGRASS — 5%
- TUFTED HAIRGRASS — 5%

CITY OF WEST LINN LOW GROWING SEED MIX — PRO–TIME (COMPANION) LOW GROWING GRASS SEED BY HOBBS & HOPKINS, LTD., AT A RATE OF 15–30 LBS. PER ACRE.
(POND 1: 8,677 S.F./0.20 ACRES)
(POND 2: 3,900 S.F./0.09 ACRES)

EMERGENT PLANTS — SLOUGH SEDGE / CAREX OBNUPTA: 4" POTS @ 12" O.C.
(POND 1: 2,110 S.F./2,439 PLANTS)
(POND 2: 540 S.F./624 PLANTS)

EMERGENT PLANTS — SMALL FRUITED BULRUSH / SCIRPUS MICROCARPUS: 4" POTS @ 12" O.C.
(POND 1: 1,157 S.F./1,337 PLANTS)
(POND 2: 276 S.F./319 PLANTS)

GRASS SEEDING NOTE:
ALL OPEN SPACE AND TRAIL CORRIDORS, INCLUDING ALL DISTURBED AREAS, THAT WILL BE CITY MAINTAINED PROPERTY SHALL BE SEEDED WITH "PRO–TIME" COMPANION SEED MIX BY HOBBS & HOPKINS, LTD., AT A RATE OF 15–30 LBS PER ACRE, 503–239–7518. ONLY "GRASSY SWALES" AT THE BOTTOM OF THE STORM WATER DETENTION PONDS SHALL RECEIVE A DIFFERENT SEED MIX AS SHOWN IN THE LEGEND ABOVE.

PLANTING NOTES

1. ALL LANDSCAPE AREAS WITHIN STORM WATER DETENTION FACILITIES WILL BE PROVIDED WITH A TEMPORARY AUTOMATIC IRRIGATION SYSTEM DESIGNED BY CONTRACTOR IN CONFORMANCE TO ALL LOCAL CITY AND STATE CODES. CONTRACTOR WILL PROVIDE MATERIALS AND INSTALL ALL IRRIGATION DOWNSTREAM OF THE EXISTING WATER METER. THE TEMPORARY IRRIGATION SYSTEM SHALL BE MAINTAINED FOR A MINIMUM OF THREE GROWING SEASONS BY OWNER. SEE CIVIL PLANS FOR EXACT LOCATION OF 1 INCH IRRIGATION WATER METERS (ONE FOR EACH POND).
2. THE LANDSCAPE CONTRACTOR IS TO THOROUGHLY REVIEW THE SITE. IF THERE ARE ANY DISCREPANCIES BETWEEN THE PLAN AND THE EXISTING CONDITIONS THE LANDSCAPE ARCHITECT IS TO BE NOTIFIED IMMEDIATELY.
3. IF THE LANDSCAPE CONTRACTOR STARTS WORK BEFORE SITE CONDITIONS ARE READY, THEY WILL BE RESPONSIBLE FOR ANY ADDITIONAL COSTS RELATING TO THE CONDITION.
4. TOPSOIL: LANDSCAPE CONTRACTOR IS TO USE EXISTING STOCKPILED TOPSOIL FOR ALL STORMWATER DETENTION FACILITIES AND PLACED AT A DEPTH OF 18 INCHES AS PER CITY OF PORTLAND STORMWATER MANAGEMENT MANUAL (SEPTEMBER 2004) GUIDLINES.
5. PRIOR TO PLANTING, NOXIOUS VEGETATION (SUCH AS BLACKBERRIES) SHALL BE REMOVED BY HAND AND DISPOSED OF OFF SITE.
6. SOIL AMENDMENTS: ADD 2" 'GARDEN CARE' COMPOST (OR APPROVED EQUAL) TO TOPSOIL (TILL IN 6") FOR ALL PLANT BEDS.
7. BARK MULCH: DARK HEMLOCK, FINE–MEDIUM GRIND, APPLIED IN A 1–FOOT RADIUS AROUND TREE OR SHRUB AT A 2–INCH DEPTH.
8. PLANTING POCKETS: REPLACE 1/3 OF EXISTING SOIL FROM PLANTING HOLES WITH 'GARDEN CARE' COMPOST (OR APPROVED EQUAL). MIX THOROUGHLY BEFORE BACK FILLING.
9. PLANT QUANTITIES SHOWN ARE INTENDED TO ASSIST THE CONTRACTOR IN EVALUATING THEIR OWN TAKE OFFS. IF THERE IS A DISCREPANCY BETWEEN PLANT QUANTITIES AND SYMBOLS SHOWN ON THE PLAN, USE THE PLANT SYMBOLS FOR TOTALS. CONTRACTOR IS RESPONSIBLE FOR ALL FINAL QUANTITIES.
10. FOLLOW CITY OF PORTLAND STORMWATER MANAGEMENT MANUAL (SEPTEMBER 2004) AND CITY OF WEST LINN CODE FOR ALL LANDSCAPING WITHIN AND AROUND ALL STORM WATER QUALITY AND DETENTION POND FACILITIES.
11. SEE CIVIL PLANS FOR CHAINLINK FENCING AROUND STORM WATER DETENTION FACILITY PONDS.

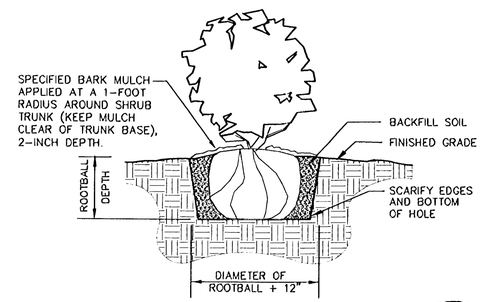

SHRUB PLANTING DETAIL — 1 / L1.2

SCALE: N.T.S

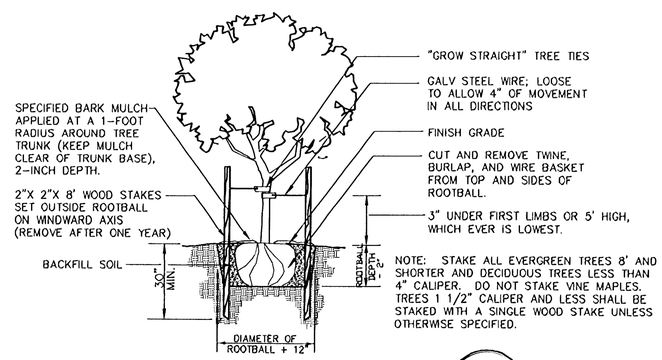

NOTE: STAKE ALL EVERGREEN TREES 8' AND SHORTER AND DECIDUOUS TREES LESS THAN 4" CALIPER. DO NOT STAKE VINE MAPLES. TREES 1 1/2" CALIPER AND LESS SHALL BE STAKED WITH A SINGLE WOOD STAKE UNLESS OTHERWISE SPECIFIED.

TREE STAKING DETAIL — 2 / L1.2

SCALE: N.T.S

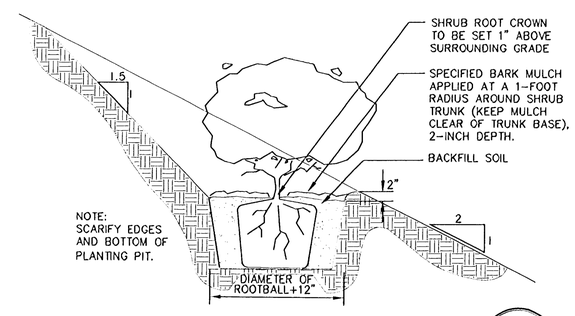

SECTION – PLANTING ON SLOPE — 3 / L1.2

SCALE: N.T.S

NO.	DATE	BY	REVISION COMMENTS

Design	Drawn	Checked	Date	Initial Issue Date:
DD	DD	MFK	10/06	

BY: [signature]
DATE: 01/11/07

Permitted design drawings stamped by: W. David Dryer Landscape Architect 330

LEGEND HOMES — HOME BUILDER

MATRIX — DEVELOPER

"AS BUILT DRAWING" DATE [illegible] BY [illegible]

AS-BUILT PLAN SUBMITTAL – JANUARY 11, 2007

MAXFIELD SUBDIVISION

WEST LINN, OR

STORM WATER DETENTION FACILITY
PLANTING PLAN (POND 1 AND POND 2)

otak Incorporated
17355 SW Boones Perry Rd.
Lake Oswego, Oregon 97035
Phone: (503) 635-3618
FAX: (503) 635-5395
Internet: WWW.Otak.COM

13227 — Project No.
L227P002 — Drawing No.
L1.2 — Sheet No.

Copyright 2005 ©

XREF LIST
Tscale: 20
Resolved
L227X001
L227X230
L227X400
L227X430
L227X600
L227X900
L227X701
Unresolved
TFKSTAMP
L227X190
L227X680
LKO: LISAB 01/04/2007 10:48am --> R:\DWG\L227P002.DWG