MARCOURT WEST

VICINITY MAP

MARCOURT WEST

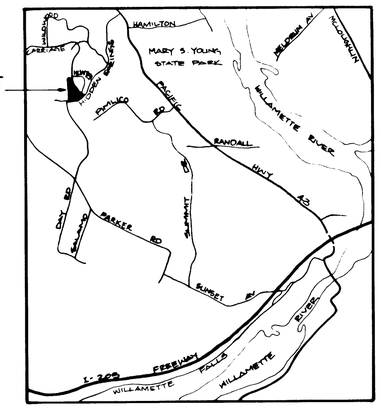

INDEX

1. Cover, Vicinity Map, Index & General Notes
2. Street & Storm Sewer Plan
3. Street & Storm Sewer Profiles & Catch Basin Details
4. Sanitary Sewer, Water & General Notes
5. Sanitary Sewer Profiles
6. Details
7. Sidewall & Street Tree Plan & Details

GENERAL NOTES

1. ALL CONSTRUCTION AND MATERIAL INCLUDED IN THIS CONTRACT SHALL COMPLY WITH THE CURRENT A.P.W.A. STANDARDS & SPECIFICATIONS, UNLESS OTHERWISE DETAILED OR SPECIFIED.
2. PRIOR TO ANY CONSTRUCTION, LOCATIONS OF EXISTING UTILITIES SHALL BE VERIFIED BY THE CONTRACTOR. WHEN ACTUAL CONDITIONS DIFFER FROM THOSE NOW ON THE PLANS, THE CONTRACTOR SHALL NOTIFY THE ENGINEER PRIOR TO PROCEEDING WITH CONSTRUCTION.
3. EXCAVATION OF THE ROADWAY AREA SHALL BE TO THE LINE AND GRADE AS SHOWN ON THE PLANS AND WILL BE UNCLASSIFIED.
4. TOPSOIL AND CLEAN EXCAVATED MATERIAL CONTAINING NO ROCK LARGER THAN 6 INCHES IN DIAMETER SHALL BE EVENLY SPREAD OVER THE SITE OUTSIDE LOTS 17, 18 AND 19.
5. ROCKS LARGER THAN 6 INCHES IN DIAMETER, ROOTS, BRUSH AND REFUSE OF ANY KIND SHALL BE EXPORTED AND DISPOSED BY THE CONTRACTOR AT NO EXTRA COST TO THE OWNER.
6. DURING THE COURSE OF CONSTRUCTION, THE CONTRACTOR SHALL USE SUCH EROSION CONTROL MEASURES AS NECESSARY TO PREVENT SILTING EXISTING PUBLIC STREETS OR STORM DRAINS. THESE MEASURES MAY INCLUDE PLACEMENT OF STRAW BAILS OR OTHER MEANS APPROVED BY THE ENGINEER. THE COST OF SUCH MEASURES SHALL BE CONSIDERED INCIDENTAL TO THE CONSTRUCTION OF STREETS AND SHALL NOT REQUIRE DIRECT PAYMENT.
7. AFTER CUTS AND FILLS ARE COMPLETED ALL DENUDED AREAS SHALL BE COVERED WITH HAY AND SEEDED WITH APPROVED GRASS TO THE SATISFACTION OF THE ENGINEER AND MAINTAINED DURING THE FIRST WINTER SEASON. HYDRA-SEEDING SHALL BE AN APPROVED ALTERNATIVE TO THE HAY COVERING IF CONDITIONS ALLOW GERMINATION AND ESTABLISHMENT OF SEED. NORMAL SATISFACTORY PERIOD FOR SEEDING SHALL BE CONSIDERED MARCH 1 AND JUNE 1. CONTRACTOR MAY PERFORM OPERATIONS FROM JUNE 1 TO SEPTEMBER 1 PROVIDED THE NEW GRASS ESTABLISHES ITSELF TO THE SATISFACTION OF THE ENGINEER. HYDRA-SEEDING SHALL COMPLY WITH THE OREGON STATE HIGHWAY SPECIFICATIONS.
8. ALL DRAIN TILES ENCOUNTERED DURING EXCAVATION SHALL BE TIED TO THE STORM DRAIN LINES AS DIRECTED BY THE ENGINEER.
9. CONTRACTOR SHALL NOT CUT ANY TREES LARGER THAN 8 INCHES IN DIAMETER WITHOUT APPROVAL OF ENGINEER.
10. SUBGRADE, GRANULAR TRENCH BACKFILL BASE ROCK AND TOP COURSE WITHIN RIGHT OF WAY AREA SHALL BE COMPACTED TO NOT LESS THAN 100 PERCENT OF MAXIMUM DENSITY AS DETERMINED BY A.A.S.H.O. T-99.
11. AT THE PROPOSED KNUCKLE AND NEW STREET INTERSECTION IN CARRIAGE WAY THE EXISTING CURB SHALL BE REMOVED BETWEEN THE JOINTS OR IF NECESSARY CUT, BUT NO CLOSER TO THE EXISTING JOINT THAN 5 FEET. THE EDGE OF THE EXISTING PAVEMENT SHALL BE SAW CUT ONE FOOT FROM THE ORIGINAL CURB LINE IMMEDIATELY BEFORE PAVING AND TACK COATED.
12. ALL CONCRETE IS TO HAVE MINIMUM 3,000 PSI COMPRESSION STRENGTH AT 28 DAYS.
13. STANDARD, WHEELCHAIR/BICYCLE RAMPS SHALL BE CONSTRUCTED AS INDICATED AT ALL CURB RETURNS.
14. CONTRACTOR SHALL EXCAVATE AND BACKFILL TRENCHES FOR PRIVATE UTILITIES AND TO COORDINATE THE WORK WITH THE UTILITY COMPANIES. THE COSTS OF COORDINATION WITH CABLE UTILITY COMPANIES IS CONSIDERED TO BE INCIDENTAL TO THE COST OF TRENCHING. THE CONTRACTOR SHALL HAVE ALL UTILITIES MARKED PRIOR TO BEGINNING CONSTRUCTION.
15. SIDEWALK IN HIDDEN SPRINGS ROAD ALONG THE FRONTAGE OF THE PROJECT FROM THE WEST PROJECT BOUNDARY TO THE NORTH END OF CURB RETURN AT CARRIAGE WAY SHALL BE CONSTRUCTED CONCURRENT WITH THE STREET IMPROVEMENTS. SIDEWALK IN LOT 19 IS TO BE CONSTRUCTED ALONG CARRIAGE WAY, 8' WIDE.
16. SIDEWALK IN THE REST OF THE PROJECT IS NOT A PART OF THIS CONTRACT AND SHALL BE CONSTRUCTED WITH THE HOME CONSTRUCTION ON EACH LOT.
17. STREET LIGHTS SHALL BE 100 WATT, H.P.S. ITT CUTOFF LUMINAIR INSTALLED ON 25 FOOT FIBERGLASS WHATLEY DIRECT BURRY BRONZE POLE. THE LIGHTS ARE TO BE SUPPLIED AND INSTALLED BY P.G.E. AND ARE NOT A PART OF THIS CONTRACT.
18. ALL TRENCHING AND PIPE PLACEMENT SHALL BE PER DETAIL ON THE DETAIL SHEET.
19. ALL CONCRETE SEWER PIPE SHALL BE A.S.T.M. C-14 CLASS 2 UNLESS OTHER WISE NOTED.
20. ALL SANITARY SEWER PIPE SHALL BE BELL AND SPIGOT WITH RUBBER GASKET.
21. STORM DRAIN PIPE MAY BE EITHER TONGUE AND GROOVE OR BELL AND SPIGOT WITHOUT GASKET.
22. USE OF PVC PIPE REQUIRES SPECIAL APPROVAL OF THE CITY. IF ALLOWED BY THE CITY, PVC PIPE SHALL COMPLY WITH A.S.T.M. D3034 AND SHALL HAVE MAXIMUM 5 PERCENT DEFLECTION AFTER COMPLETION OF BACKFILL.

AS BUILT

BY: DES DATE: 4-24-86

EIB Designed	5-6 Date
EJ Drawn	1/86 Date
EIB Checked	1/86 Date

Revisions

REVISED 2/6/86 KN
REVISED 2-11-86 MH

REGISTERED PROFESSIONAL ENGINEER 10,658 Kenneth A. Nelson OREGON JUL 18 1980 KENNETH A. NELSON

MARCOURT WEST

VICINITY MAP, INDEX & GENERAL NOTES

MARCOURT WEST

ED BUCHMAN
16400 S.E. CHAPIN RD
LAKE OSWEGO, OREGON 97034
(503) 639-75078

otak
otman tarran launsbach incorporated
planners engineers surveyors
17355 sw boones ferry road lake oswego, oregon 97034 telephone (503) 635-3618

Sheet No. 1/7

Project No. 1359

CURVE AND CURB RETURN DATA

① Δ - 90°00'00"
R - 25.00
L - 39.27
1+48 TC 599.2
1/4 Δ TC 600.70
1/2 Δ TC 602.10
3/4 Δ TC 603.15
0+43 TC 603.87

② Δ - 81°18'57"
R - 139.00
L - 197.27

③ Δ - 44°10'50"
R - 25.00
L - 19.28

④ Δ - 286°42'52"
R - 42.00
L - 210.17

⑤ Δ - 71°03'44"
R - 25.00
L - 31.01

⑥ Δ - 72°47'14"
R - 111.00
L - 141.01

⑦ Δ - 90°00'00"
R - 25.00
L - 39.27
0+43 TC 604.87
1/4 Δ TC 605.05
1/2 Δ TC 606.62
3/4 Δ TC 608.37
2+26 TC 609.00

⑧ Δ - 102°31'24"
R - 25.00
L - 44.73

⑨ Δ - 250°09'29"
R - 42.00
L - 168.71

⑩ Δ - 106°41'12"
R - 25.00
L - 46.55

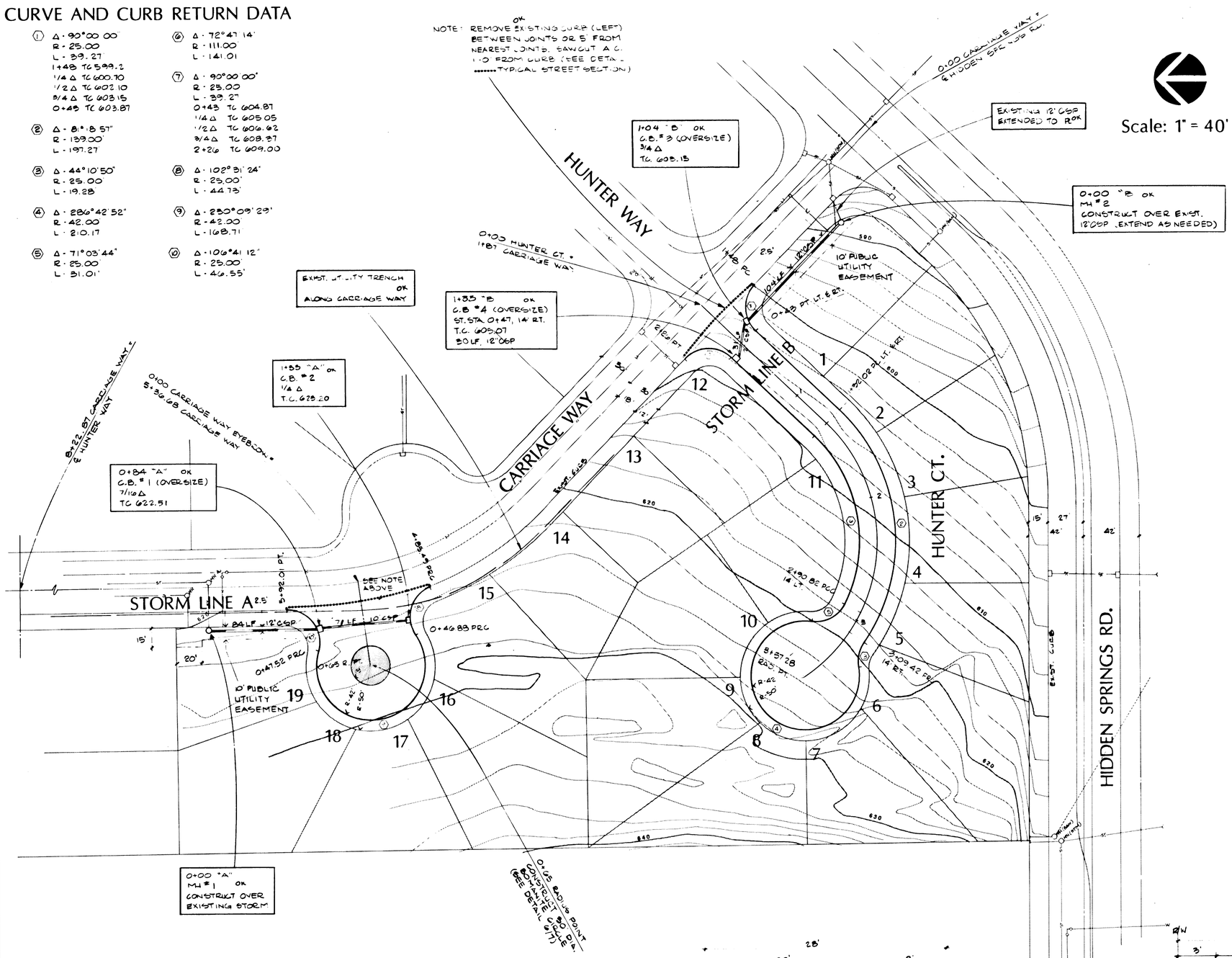

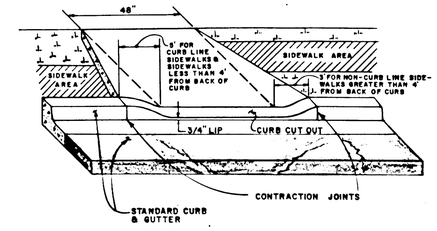

FRONT VIEW

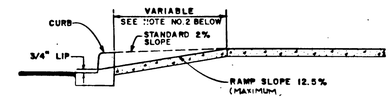

PROFILE VIEW

NOTES:

1. ALL RAMPS TO BE 4" THICK CONCRETE AND SHALL MEET A MINIMUM OF 3,000 P.S.I. COMPRESSION STRENGTH IN 28 DAYS.
2. RAMP LENGTH: a.) FOR CURB LINE SIDEWALKS AND SIDEWALKS UP TO 5' FROM BACK OF CURB, RAMPS SHALL SLOPE TO BACK OF SIDEWALK. b.) FOR SIDEWALK MORE THAN 5' FROM BACK OF CURB, RAMPS SHALL SLOPE AT 12.5% MAXIMUM FOR 5', THEN AT 2% TO SIDEWALK.

Wheelchair Ramp Detail

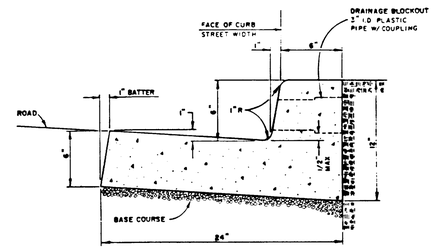

1. CONCRETE TO HAVE A BREAKING STRENGTH OF 3000 P.S.I. AFTER 28 DAYS.
2. EXPANSION JOINTS
   A. TO BE PROVIDED:
      1) AT EACH POINT OF TANGENCY OF THE CURB.
      2) AT EACH COLD JOINT.
      3) ON EACH SIDE OF INLETS.
      4) AT EACH END OF DRIVEWAYS.
      5) AT LOCATIONS NECESSARY TO LIMIT SPACING TO 45 FEET.
   B. MATERIAL TO BE PRE-MOLDED NON-EXTRUDING MATERIAL WITH A MINIMUM THICKNESS OF 1/2 INCH.
3. CONTRACTION JOINTS.
   A. SPACING TO BE NOT MORE THAN 15 FEET.
   B. THE DEPTH OF THE JOINT SHALL BE AT LEAST 1½ INCHES.
4. BASE ROCK - 1 1/2" MINUS, 95% COMPACTION. BASE ROCK SHALL BE TO SUBGRADE OF STREET STRUCTURE OR 4" IN DEPTH, WHICHEVER IS GREATER.
5. DRAINAGE BLOCKOUT - 3" DIAMETER PLASTIC PIPE
   A. I.D. PLASTIC PIPE WITH COUPLING
   B. DRAINAGE ACCESS THROUGH EXISTING CURBS SHALL BE CORE DRILLED OR CURB SAW CUT VERTICALLY 18" EACH SIDE OF ACCESS AND REPOURED TO FULL DEPTH OF CURB.
   C. DRAINAGE BLOCKOUTS SHALL NOT BE PROVIDED UNLESS NEEDED.

Curb & Gutter Detail

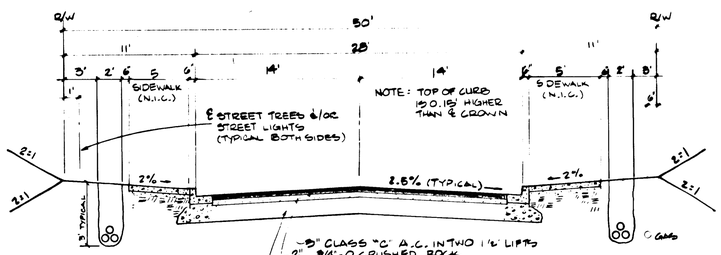

HUNTER CT.

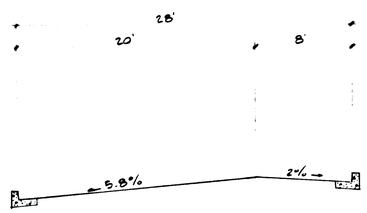

TOP OF CURB LEFT 0.66' LOWER THAN ℄

TOP OF CURB RIGHT 0.54' HIGHER THAN ℄

TOP OF CURB RIGHT 1.0' HIGHER THAN TC LEFT

HUNTER CT.

OFFSET CROWN ST. STA. 0+43 TO 2+60

AS BUILT

BY: DEJ DATE: 4-24-86

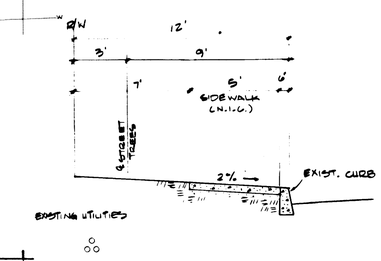

Typical Section

CARRIAGE WAY SOUTH OF STA. 5+50

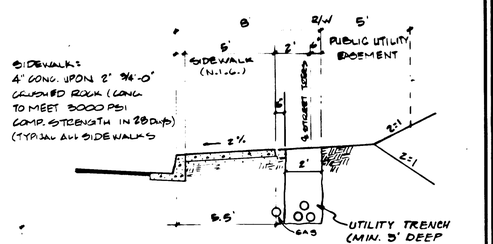

Typical Section

FOR CARRIAGE WAY BUBBLE & HUNTER CT. CUL-DE-SAC

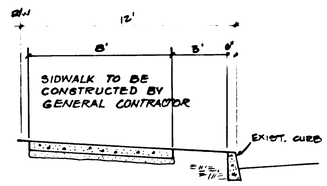

Typical Section

SIDEWALK ADJACENT TO LOT 19

Designed	Date
Drawn	Date
Checked	Date

Revisions

REVISED 2/6/86 KN

REGISTERED PROFESSIONAL ENGINEER 10659 OREGON JULY 18, 1986 KENNETH A. NELSON

STREET & STORM SEWER PLAN & DETAILS

MARCOURT WEST

ED BUCHMAN
16400 S.E. CHAPIN RD
LAKE OSWEGO, OREGON 97034
(503) 639-75078

otak
otak, inc.
tarlan
turnbull
incorporated
planners
engineers
surveyors
17355 sw boones ferry road lake oswego, oregon 97034
telephone (503) 635-3618

Sheet No. 2/7

Project No. 1359

FORD GRAPHICS 090155

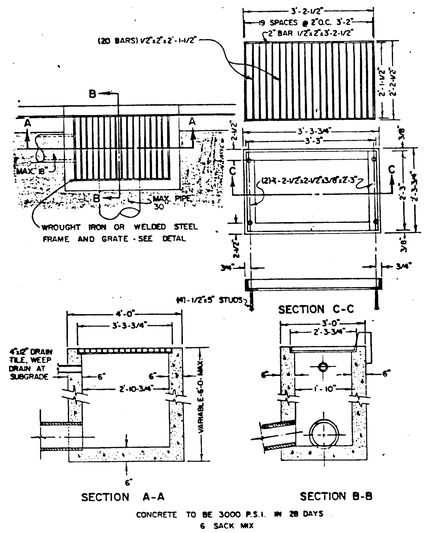

Oversize Catch Basin

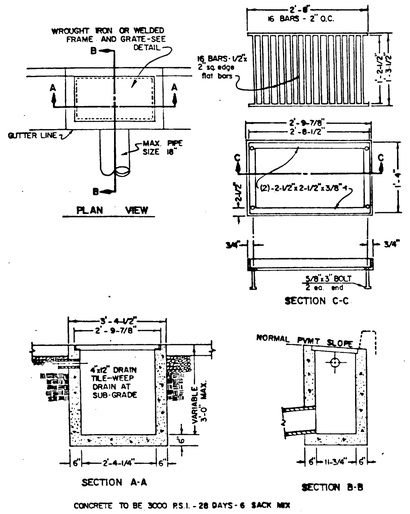

Standard Catch Basin

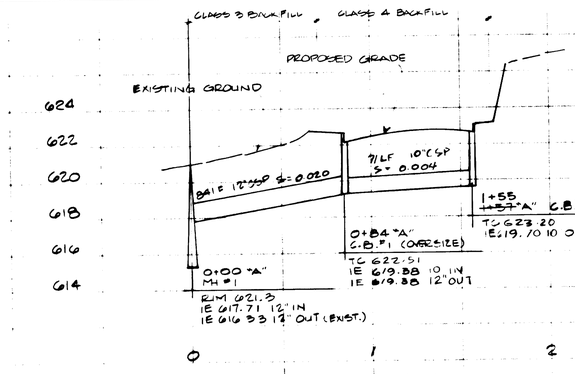

STORM LINE A

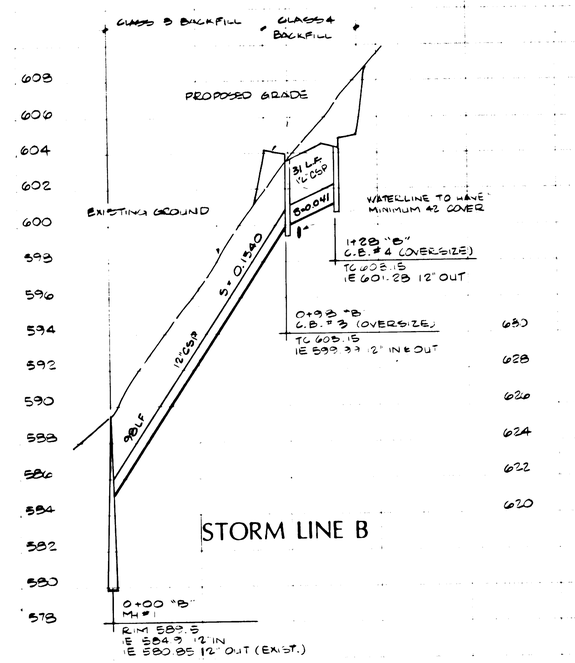

STORM LINE B

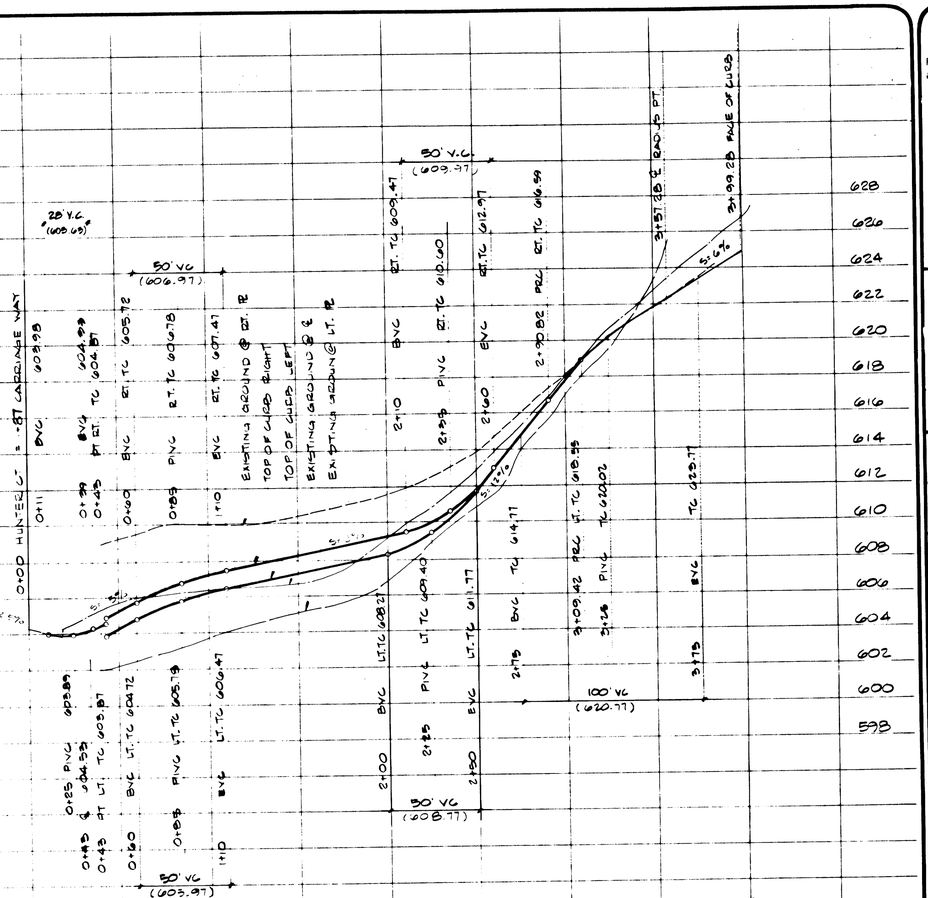

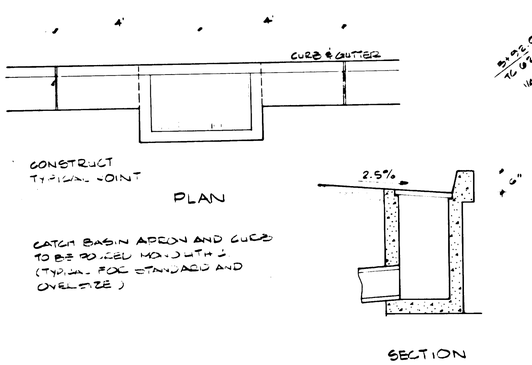

Catch Basin Apron

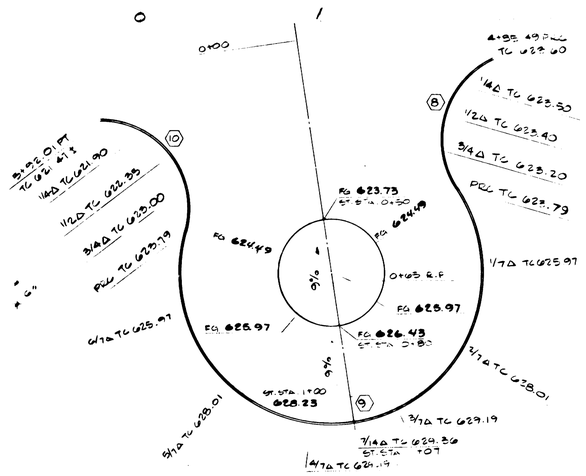

Carriage Way Bubble

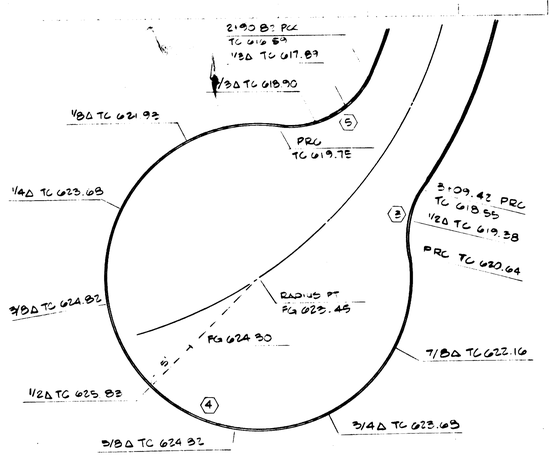

Hunter Ct. Cul-de-sac

AS BUILT

BY: DES DATE: 4-24-86

SCALE: 1" = 40' Horizontal

1" = 4' Vertical

REVISED 3/6/86 KN
REVISED 2-11-86 KN

REGISTERED PROFESSIONAL ENGINEER 10659 OREGON JUN 18 1980 KENNETH A. WELSH

STREET & STORM SEWER PROFILES & CATCH BASIN DETAILS

MARCOURT WEST

ED BUCHMAN
16400 S E CHAPIN RD
LAKE OSWEGO, OREGON 97034
(503) 639-7507B

otak

3/7

1359

WATER LINE SCHEDULE

(1) 0 + 00
REMOVE EXISTING PLUG
INSTALL 10" X 6" MJ REDUCER TIED TO 10" X 10" TEE
WITH MINIMUM 2 EACH 3/4" TIE RODS, AND
6" MJ GATE VALVE AND
6" 45° MJ BEND WITH THRUST BLOCK

(2) 0 + 30
6" 45° MJ BEND AND
THRUST BLOCK

(3) 1 + 81
6" 45° MJ BEND AND
6" 22 1/2" BEND WITH THRUST BLOCK

(4) 3 + 41
6" MJ TEE, WITH THRUST BLOCK,
6" X 4" MJ REDUCER TIED TO BEND WITH MINIMUM 2 EACH
3/4" TIE RODS AND
4" 22 1/2° MJ BEND WITH THRUST BLOCK
ST. STA. 3 + 12, 5.5' RT.

(5) 2" BLOW-OFF
WITH STRADDLE BLOCK
ST. STA. 3 + 65 ON CENTERLINE EXTENDED

(6) 4 + 01
6" 22 1/2° MJ BEND AND
6" 11 1/4° MJ BEND WITH THRUST BLOCKS
ST. STA. ~~2 + 24~~ 2 + 46, 5.5' RT.

(7) 4 + 76
6" 22 1/2° MJ BEND AND
6" 11 1/4° MJ BEND WITH THRUST BLOCKS
ST. STA. 1 _ 66, 2" RT

(8) 5 + 94
6" MJ x MJ x FL TEE, WITH THRUST BLOCK,
6" FL x MJ GATE VALVE,
FIRE HYDRANT ASSEMBLY,
ST. STA. 1 + 48, ~~7~~ 10" RT

(9) 6 + 06
6" MJ x MJ GATE VALVE
6" 90° MJ BEND WITH THRUST BLOCK
ST. STA. 0 + 35, 8' RT.

(10) 8 + 00
DEFLECT PIPE
RADIUS 280'

(11) 11 + 17
2" BLOW OFF
WITH STRADDLE BLOCK
ST. STA. 6 + 78, 27.5' LT.

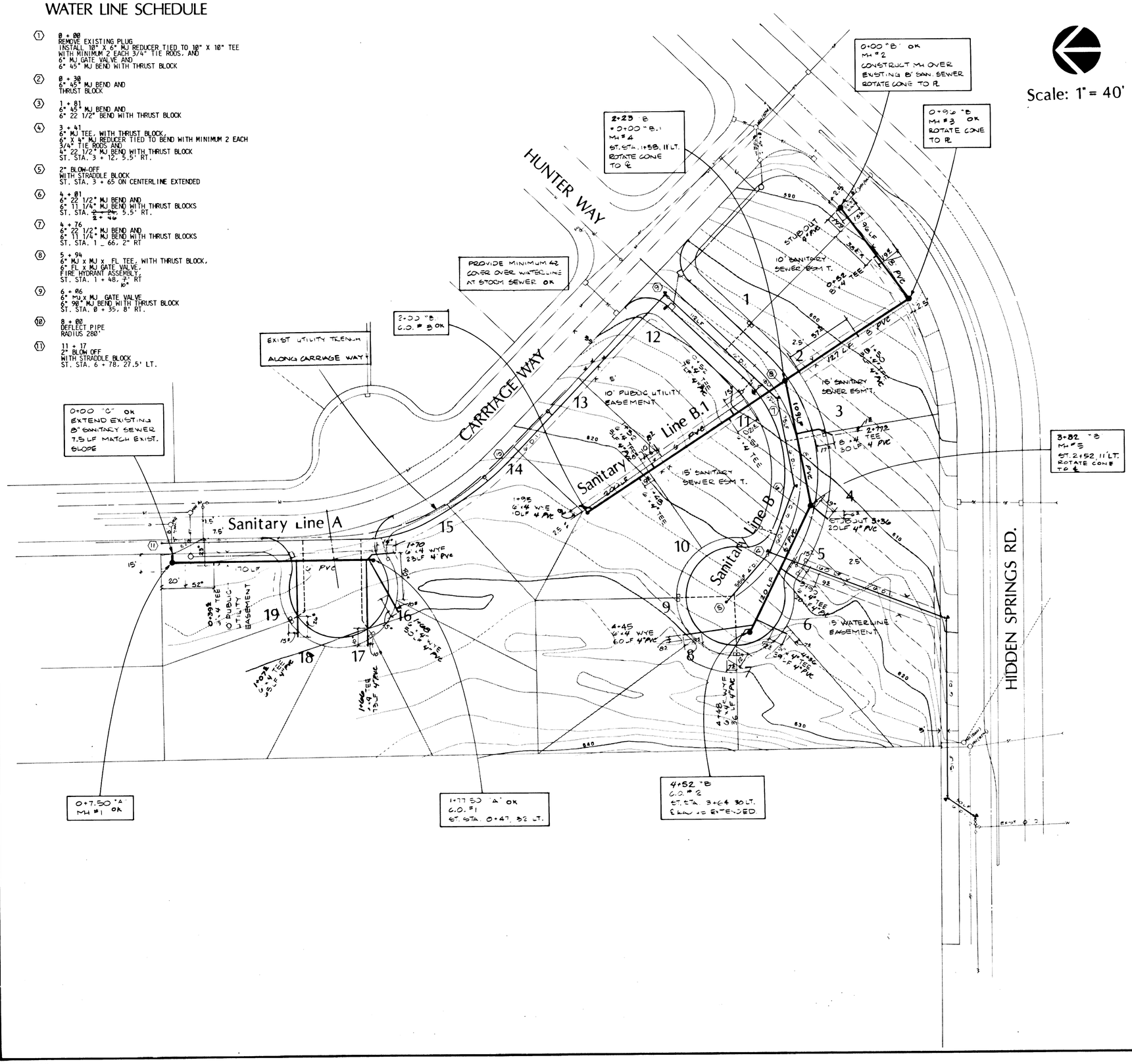

NOTE: ALL SEWER LATERAL TIES ARE FROM PROPERTY PINS AND BACK OF CURB AT SEWER STAMP IN CURB.

SEWER LATERAL ELEVATIONS

LOT 1 - 11.1 ± BELOW LOT GRADE & 5.0 BELOW TOP OF CURB
LOT 2 - 10.2 ± BELOW LOT GRADE & 4.7 BELOW TOP OF CURB
LOT 3 - 5.7 ± BELOW LOT GRADE
LOT 4 - 6.3 ± BELOW LOT GRADE & 5.6 BELOW TOP OF CURB
LOT 5 - 7.0 ± BELOW LOT GRADE & 6.9 BELOW TOP OF CURB
LOT 6 - 6.5 ± BELOW LOT GRADE & 6.7 BELOW TOP OF CURB
LOT 7 - 7.9 ± BELOW LOT GRADE & 5.5 BELOW TOP OF CURB
LOT 8 - 10.6 ± BELOW LOT GRADE & 4.4 BELOW TOP OF CURB
LOT 9 - 9.5 ± BELOW LOT GRADE & 4.2 BELOW TOP OF CURB
LOT 10 - 8.8 ± BELOW LOT GRADE
LOT 11 - 10.0 ± BELOW LOT GRADE & 4.8 BELOW TOP OF CURB
LOT 12 - 10.0 ± BELOW LOT GRADE & 5.0 BELOW TOP OF CURB
LOT 13 - 7.5 ± BELOW LOT GRADE
LOT 14 - 7.8 ± BELOW LOT GRADE
LOT 15 - 10.3 ± BELOW LOT GRADE & 5.4 BELOW TOP OF CURB
LOT 16 - 10.7 ± BELOW LOT GRADE & 6.3 BELOW TOP OF CURB
LOT 17 - 10.6 + BELOW LOT GRADE & 7.7 BELOW TOP OF CURB
LOT 18 - 6.8 ± BELOW LOT GRADE & 4.7 BELOW TOP OF CURB
LOT 19 - 8.0 ± BELOW LOT GRADE & 5.4 BELOW TOP OF CURB

GENERAL NOTES

23. TRENCHES WITHIN PROPOSED RIGHT OF WAY SHALL BE BACKFILLED WITH CRUSHED ROCK COMPACTED TO AT LEAST 95 PERCENT OF RELATIVE MAXIMUM DENSITY (AASHTO T-99).
24. IN AREAS OUTSIDE OF PROPOSED RIGHT OF WAY TRENCH BACKFILL ABOVE PIPE ZONE SHALL BE COMPACTED. SELECT NON-ORGANIC NATIVE MATERIAL, CONTAINING NO ROCKS LARGER THAN 4 INCHES IN DIAMETER.
25. ALL SANITARY SEWER LATERALS SHALL BE CONSTRUCTED AT 2 PERCENT SLOPE UNLESS OTHERWISE SPECIFIED.
26. THE UPSTREAM ENDS OF SANITARY SEWER LATERALS SHALL BE MARKED BY 8 FEET LONG 2 X 4'S. THE LOWER END OF WHICH MUST BE AT THE PIPE FLOW LINE ELEVATION.
27. CONTRACTOR SHALL BE RESPONSIBLE FOR KEEPING THE RECORD OF THE ACTUAL LOCATION AND ELEVATION OF SANITARY LATERALS AND OF ALL UNDERGROUND IMPROVEMENTS WHICH DEVIATE FROM THE APPROVED CONSTRUCTION DRAWINGS.
28. MANHOLE FRAMES AND COVERS SHALL BE STANDARD TYPE IN PAVEMENT AREAS AND SUBURBAN TYPE OUTSIDE OF PAVEMENT AREAS.
29. NO PRE-CAST BASES FOR MANHOLES WILL BE ALLOWED.
30. PRIOR TO ACCEPTANCE, ALL SANITARY SEWER SHALL BE AIR TESTED IN ACCORDANCE WITH THE A.P.W.A. SPECIFICATIONS.
31. WATERLINES SHALL BE CLASS 52 DUCTILE IRON PLACED UPON MINIMUM 6 INCHES OF BEDDING AND COVERED BY MINIMUM OF 12 INCHES OF 3/4 INCH - 0 INCH CRUSHED ROCK.
32. GATE VALVES SHALL COMPLY WITH THE A.P.W.A. SPECIFICATIONS. OR APPROVED EQUAL
33. FIRE HYDRANTS SHALL BE "WATEROURS" BRAND WITH 5 1/4 INCH VALVE AND STEAM PORT.
34. CONCRETE THRUST BLOCKING SHALL BE PROVIDED AT ALL WATERLINE FITTINGS AS PER SHOWN DETAIL. BLOCKING SHALL BE POURED AGAINST UNDISTURBED EARTH AND CLEAR OF JOINT ACCESSORIES. BEARING AREA OF THRUST BLOCK SHALL BE COMPUTED ON THE BASIS OF THE SHOWN CHART.
35. THE COST OF WATER PIPE FITTINGS AND THRUST BLOCKING REQUIRED ARE CONSIDERED INCIDENTAL TO THE WATERPIPE INSTALLATION AND SHALL NOT REQUIRE DIRECT PAYMENT.
36. WATERLINES SHALL BE PRESSURE TESTED FOLLOWING COMPLETION. TEST PRESSURE SHALL BE 150 PSI AT THE LOWEST POINT IN TEST SECTION AND SHALL BE HELD ON THE LINE FOR A PERIOD OF THIRTY MINUTES. LEAKAGE MUST BE WITHIN ALLOWABLE LEAKAGE LIMITS PER A.P.W.A. SPECIFICATIONS.
37. PRIOR TO BEING PLACED IN SERVICE, THE WATERLINE AND SERVICES SHALL BE FLUSHED, STERILIZED AND FLUSHED ALL IN ACCORDANCE WITH STANDARD METHODS OF THE HEALTH DIVISION, DEPARTMENT OF HUMAN RESOURCES, STATE OF OREGON.
38. PRIOR TO ALLOWING HUMAN CONSUMPTION OF WATER FROM THE NEW WATERLINE, A SAMPLE SHALL BE TAKEN AND TESTED FOR BACTERIOLOGICAL QUALITY. RESULTS MUST BE WITHIN STANDARDS OF THE STATE OF OREGON.
39. ALL LOT WATER SERVICES TO BE TYPE "K" SOFT COPPER TUBING, CONFORMING TO A.S.T.M. B88, 3/4 INCH IN DIAMETER UNLESS OTHERWISE SHOWN.
40. CONTRACTOR SHALL CALL CITY MAINTENANCE DEPARTMENT BEFORE CONNECTING TO EXISTING WATERLINES OR TO OPERATE THE EXISTING WATER VALVES.
41. UTILITY TRENCHING SHALL BE 30 INCHES DEEP AND BACKFILLED WITH NATIVE MATERIAL. PVC CROSSINGS ARE TO BE SCHEDULE 40 PVC WITH 3/4" - 0" BACKFILL COMPACTED TO 95% A.A.S.H.T.O. T-99.
42. WATER METERS TO BE LOCATED 24" BEHIND SIDEWALK.

AS BUILT
BY: DES DATE: 4-24-86

AA Designed	JAN 86 Date
Drawn	Date
KN Checked	Date

Revisions
REVISED 2/16/86 KN
REVISED 2-11-86 KN

REGISTERED PROFESSIONAL ENGINEER 10,659 OREGON JULY 18, 1980 KENNETH A. NELSON

SANITARY SEWER AND WATER PLAN

MARCOURT WEST

ED BUCHMAN
16400 S.E. CHAPIN RD
LAKE OSWEGO, OREGON 97034
(503) 639-7507B

otak incorporated
consulting engineers planners engineers surveyors
17355 sw boones ferry road lake oswego, oregon 97034 telephone (503) 635-3618

Sheet No. 4/7
Project No. 1359

FORD GRAPHICS 200/155

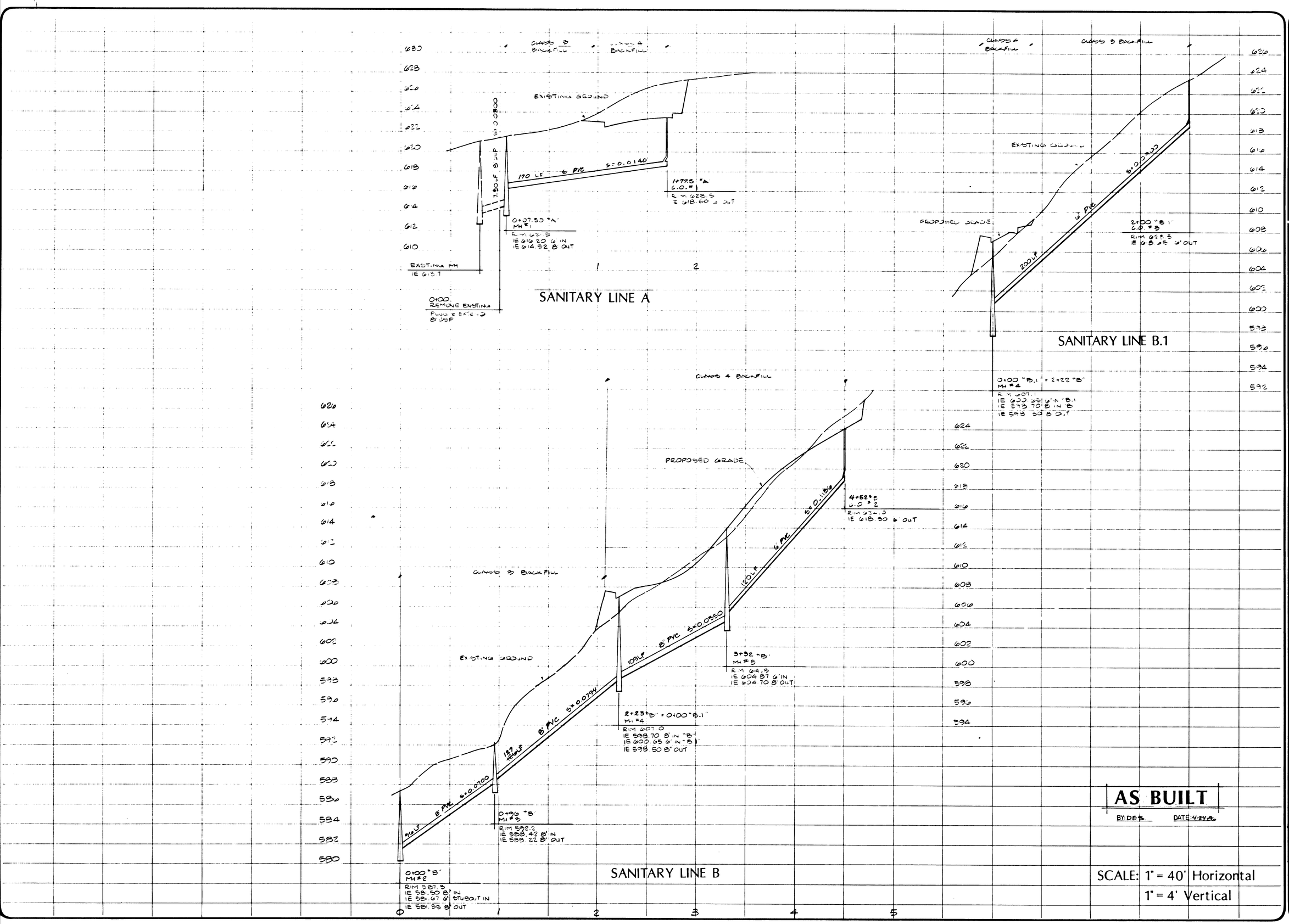

REVISED 2/6/86 KN
REVISED 2-11-86 MH

REGISTERED PROFESSIONAL ENGINEER 10659 OREGON July 18 1980 KENNETH A. NELSON

SANITARY SEWER PROFILES

MARCOURT WEST

ED BUCHMAN
16400 S E CHAPIN RD
LAKE OSWEGO, OREGON 97034
(503) 639-75078

otak
othman tehran kurshashi incorporated
planners engineers surveyors
17355 sw boones ferry road lake oswego oregon 97034 telephone (503) 635-3618

5/7

1359

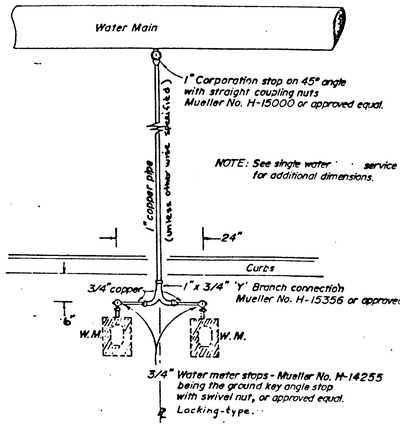

Typical Double Water Service Connection

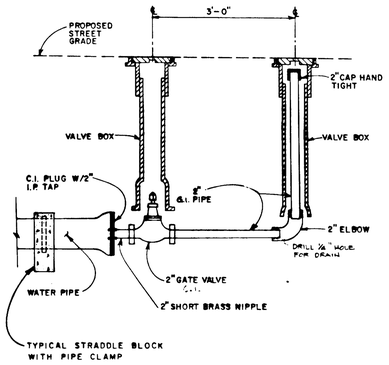

Blowoff

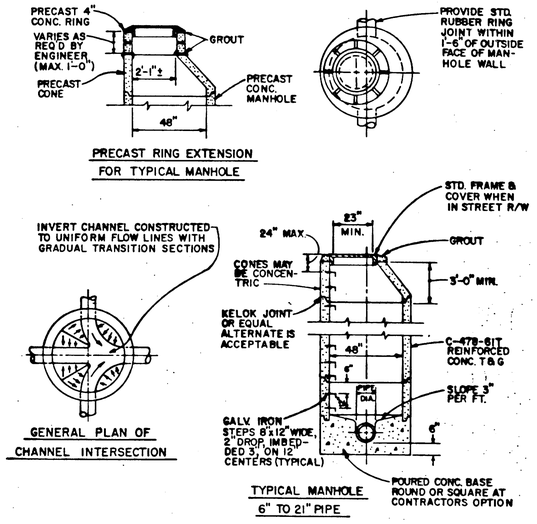

NOTES:
1. ALL PRECAST SECTIONS SHALL CONFORM TO THE REQUIREMENTS OF A.S.T.M.-C-478. ALL POURED IN PLACE CONCRETE SHALL HAVE A 28 DAY STRENGTH OF 3,000 P.S.I. AND 2" TO 4" SLUMP.
2. MATERIAL: 3/4" DIA. STRUCTURAL STEEL CONFORMING TO A.S.T.M. A-36 AND GALVANIZED IN CONFORMANCE TO A.S.T.M. A-123, FOR STEPS.

Standard Manhole

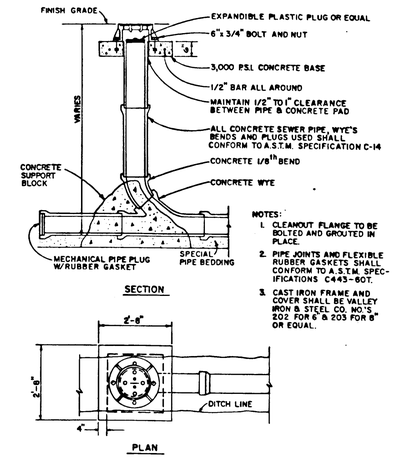

NOTES:
1. CLEANOUT FLANGE TO BE BOLTED AND GROUTED IN PLACE.
2. PIPE JOINTS AND FLEXIBLE RUBBER GASKETS SHALL CONFORM TO A.S.T.M. SPECIFICATIONS C443-60T.
3. CAST IRON FRAME AND COVER SHALL BE VALLEY IRON & STEEL CO. NO'S. 202 FOR 6" & 203 FOR 8" OR EQUAL.

Cleanout

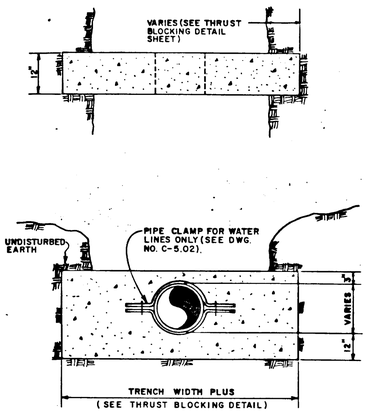

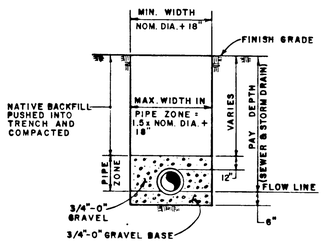

CLASS 3 BACKFILL
(GENERALLY UNIMPROVED AREAS)

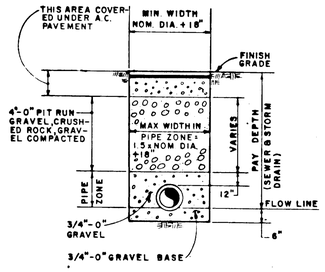

CLASS 4 BACKFILL
(GENERALLY PAVED AREAS)

Trenching

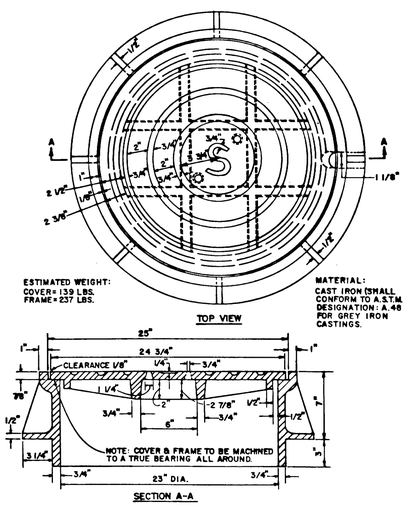

Standard Manhole Frame & Cover

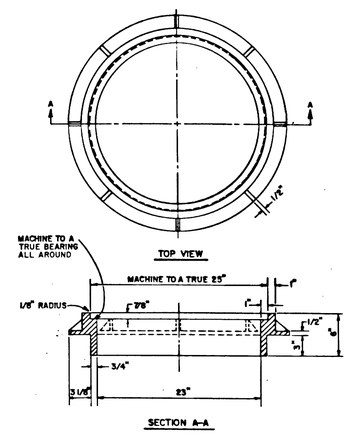

NOTES:
1. MATERIAL TO BE GRAY CAST IRON A.S.T.M. A-48, CLASS 30.
2. SUBURBAN MANHOLE FRAME SHALL BE USED IN NON-VEHICULAR USE AREAS ONLY.

Suburban Manhole Frame

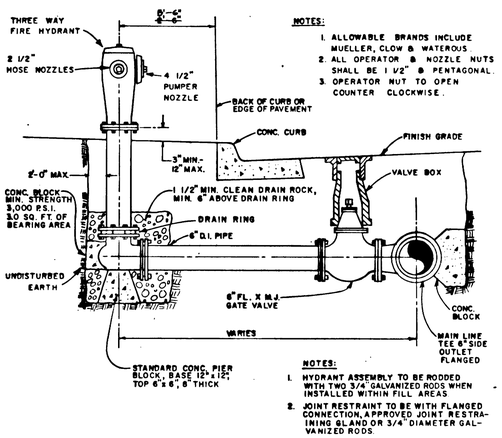

NOTES:
1. ALLOWABLE BRANDS INCLUDE MUELLER, CLOW & WATEROUS.
2. ALL OPERATOR & NOZZLE NUTS SHALL BE 1 1/2" @ PENTAGONAL.
3. OPERATOR NUT TO OPEN COUNTER CLOCKWISE.

NOTES:
1. HYDRANT ASSEMBLY TO BE RODDED WITH TWO 3/4" GALVANIZED RODS WHEN INSTALLED WITHIN FILL AREAS.
2. JOINT RESTRAINT TO BE WITH FLANGED CONNECTION, APPROVED JOINT RESTRAINING GLAND OR 3/4" DIAMETER GALVANIZED RODS.

Fire Hydrant Assembly

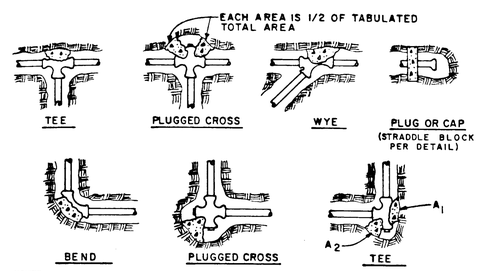

NOTES:
1. CONCRETE THRUST BLOCKING TO BE POURED AGAINST UNDISTURBED EARTH.
2. KEEP CONCRETE CLEAR OF JOINT AND ACCESSORIES.
3. IF NOT SHOWN ON PLANS, REQUIRED BEARING AREAS AT FITTING SHALL BE AS INDICATED BELOW, ADJUSTED IF NECESSARY, TO CONFORM TO THE TEST PROCEDURE(S) AND ALLOWABLE SOIL BEARING STRESS (ES) STATED THE SPECIAL SPECIFICATIONS.
4. BEARING AREAS AND SPECIAL BLOCKING DETAILS SHOWN ON PLANS TAKE PRECEDENCE OVER BEARING AREAS AND BLOCKING DETAILS SHOWN ON THIS STANDARD DETAIL.
5. BUILDING PAPER OR VISQUINE SHALL BE PLACED BETWEEN CONCRETE AND FITTINGS.
6. ALL POURED IN PLACE CONCRETE SHALL HAVE A (28) DAY STRENGTH OF 3,000 P.S.I. (MIN.) AND 2" TO 4" SLUMP.
7. BELOW BEARING AREAS BASED ON TEST PRESSURE OF 150 P.S.I. AND AN ALLOWABLE SOIL BEARING STRESS OF 2,000 POUNDS PER SQUARE FOOT. TO COMPUTE BEARING AREAS FOR DIFFERENT TEST PRESSURES AND SOIL BEARING STRESSES, USE THE FOLLOWING EQUATION: BEARING AREA = (TEST PRESSURE / 150) X (2,000 / SOIL BEARING STRESS) X (TABLE VALUE). BEARING AREAS IN SQUARE FEET.

FITTING SIZE (IN.)	TEE, WYE, PLUG OR CAP	90° BEND PLUGGED CROSS	TEE PLUGGED ON RUN A_1	TEE PLUGGED ON RUN A_2	45° BEND	22 1/2° BEND	11 1/4° BEND
4	1.0	1.4	1.9	1.4	1.0	—	—
6	2.0	3.0	4.3	3.0	1.6	1.0	—
8	3.8	5.3	7.6	5.4	2.9	1.5	1.0
10	5.9	8.4	11.8	8.4	4.6	2.4	1.2
12	8.5	12.0	17.0	12.0	6.6	3.4	1.7
14	11.5	16.3	23.0	16.3	8.9	4.6	2.3
16	15.0	21.3	30.0	21.3	11.6	6.0	3.0
18	19.0	27.0	38.0	27.0	14.6	7.6	3.8
20	23.5	33.3	47.0	33.3	18.1	9.4	4.7
24	34.0	48.0	68.0	48.0	26.2	13.6	6.8

Thrust Blocking

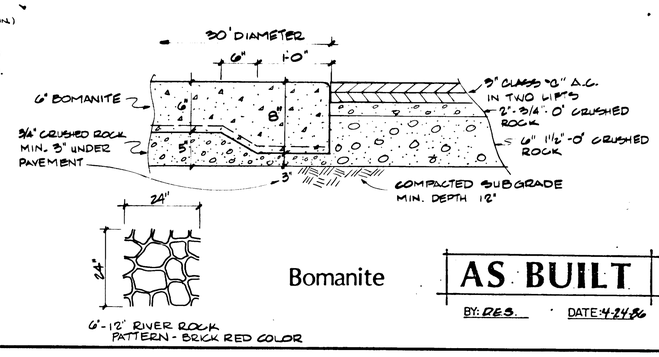

Bomanite

AS BUILT
BY: DES. DATE: 4-24-86

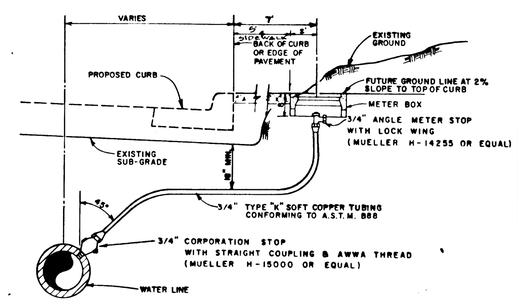

NOTES:
1. ALLOWABLE BRANDS FOR CORPORATION & ANGLE METER STOPS INCLUDE MUELLER, HAYS, FORD & JONES.
2. METER BOXES SHALL BE BROOKS PRODUCTS COMPANY # 4 OR METER BOX EQUIPMENT COMPANY # 1.
3. METER BOX TO BE INSTALLED AT SAME TIME AS SERVICE LINE INSTALLATION.

Typical Single Water Service Connection

Designed	Date
Drawn	Date
Checked	Date

Revisions
REVISED 2/6/86 KN
REVISED 2-11-86 MM

REGISTERED PROFESSIONAL ENGINEER 10,659 OREGON JULY 18, 1980 KENNETH A. NELSON

DETAILS

MARCOURT WEST

ED BUCHMAN
16400 S.E. CHAPIN RD
LAKE OSWEGO, OREGON 97034
(503) 639-75078

otak inc. otthman tahran kunshaty incorporated
planners engineers surveyors
17355 sw boones ferry road lake oswego, oregon 97034 telephone (503) 635-3618

Sheet No. 6/7
Project No. 1359

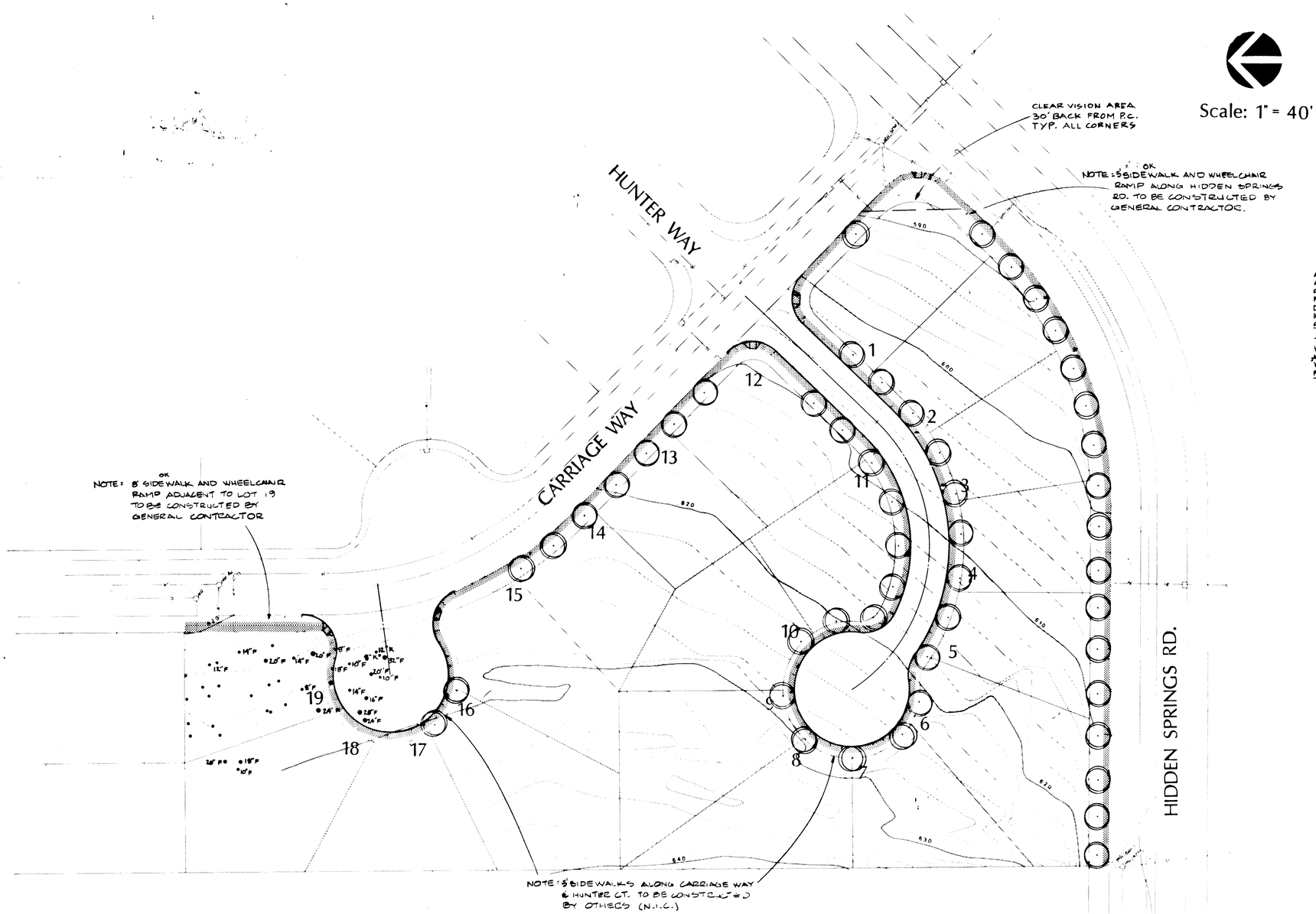

NOTE: STREET TREES TO BE 1 1/2" CALIPER SWEET GUM. BALLED AND BURLAPPED 8 FT. TO 10 FT. TALL.

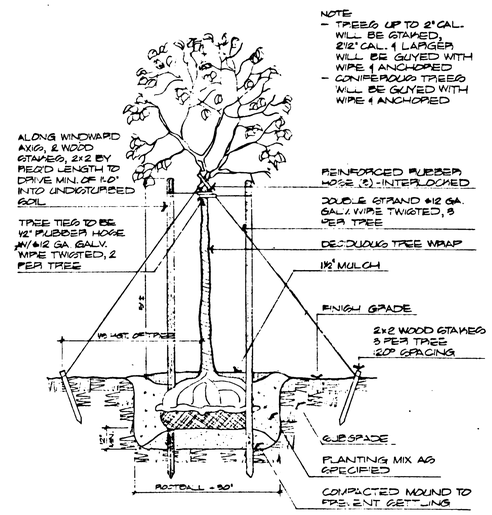

Tree Planting Detail

(TREES TO BE PLANTED BY GENERAL CONTRACTOR)

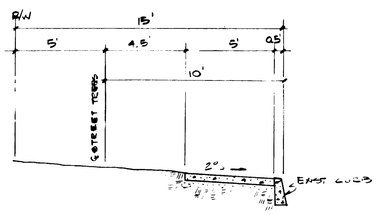

Typical Section

OF SIDEWALK ALONG HIDDEN SPRINGS RD.

AS BUILT

BY: DES DATE: 4-24-86

NOTE: AS-BUILTS FOR SIDEWALK ALONG HIDDEN SPRINGS RD. AND IN FRONT OF LOT 19 ONLY

SOIL PREPARATION SPECIFICATION

EXISTING TOPSOIL ON SITE IS TO BE STOCKPILED FOR FUTURE USE IN THE NEW PLANTING AREAS. THIS EXISTING TOPSOIL IS TO BE AMENDED IN THE FOLLOWING MANNER.

GENERAL SOIL PREPARATION FOR ALL PLANTING POCKETS AND GROUND COVER AREAS:

1. TWO INCH ROTTED STEER MANURE AND ROTTED SAWDUST MIXTURE.
2. ONE POUND AMMONIUM SULPHATE PER 100 SQUARE FEET.
3. TILL OR MIX ALL THE ABOVE INGREDIENTS INTO THE TOP 8 INCHES OF EXISTING SOIL.

TOPDRESSING:

AFTER PLANTING, TOP DRESS ALL PLANTING AREAS WITH 1-1/2 INCH DEPTH MEDIUM FINE ROTTED BARK MULCH UNLESS OTHERWISE NOTED ON PLAN.

TREE AND SHRUB POCKET PLANTING:

1. DIP HOLE TWO TIMES THE DIAMETER OF THE CONTAINER OR ROOT BALL AND ONE AND ONE HALF THE DEPTH OF THE CONTAINER OR ROOT BALL.
2. FILL THE HOLE WITH WATER AND ALLOW THE WATER TO DRAIN INTO THE SURROUNDING SOIL.
3. USE THE GENERAL SOIL PREPARATION SPECIFICATION FOR BACKFILL AROUND EACH SHRUB AND TREE INCLUDING ORGANIC FERTILIZER.
4. PLANT AS FOLLOWS:
   A. FORM SMALL COMPACT MOUND OF TOPSOIL IN THE BOTTOM OF THE HOLE.
   B. PLACE THE BASE OF THE PLANT ON COMPACTED MOUND SO THAT THE CROWN IS 1 1/2 INCHES ABOVE SURROUNDING GRADE (THIS WILL ALLOW FOR DRAINAGE AND SOME SETTLING).
   C. ADD FERTILIZER TO PLANTING SOIL AND BACKFILL PLANTS FOLLOWED BY MUDDING WITH WATER.

FERTILIZATION PROGRAM AT TIME OF PLANTING:

WORK THE FOLLOWING WEBFOOT BRAND 5-4-3 ORGANIC FERTILIZER INTO THE BACKFILL FOR ALL TREES AND SHRUBS AT THE FOLLOWING RATES -

SHRUBS	
1 GALLON PLANTS	1/2 CUP
2 - 3 GALLON PLANTS	1 CUP
5 GALLON PLANTS	2 CUPS
DECIDUOUS TREES	
UP TO 1 1/2 INCH CALIPER	3 CUPS
UP TO 2 INCH CALIPER	4 CUPS
UP TO 3 INCH CALIPER	6 CUPS
CONIFER TREES	
UP TO 6 INCH HIGH	3 CUPS
UP TO 8 INCH HIGH	4 CUPS
UP TO 12 INCH HIGH	6 CUPS

Designed	Date
Drawn	Date
Checked	Date

Revisions

REVISED 2/6/86 KN
REVISED 2-11-86 MH

REGISTERED PROFESSIONAL ENGINEER 10,659 OREGON July 18, 1980 KENNETH A. NELSON

SIDEWALK & STREET TREES PLAN & DETAILS

MARCOURT WEST

ED BUCHMAN
16400 S.E. CHAPIN RD
LAKE OSWEGO, OREGON 97034
(503) 639-75078

otak
17355 SW Boones Ferry Road
Lake Oswego, Oregon 97034
(503) 635-3618
otak incorporated
planners engineers surveyors

Sheet No. 7/7

Project No. 1359