MACKENZIE ROSE ESTATES - P.U.D.

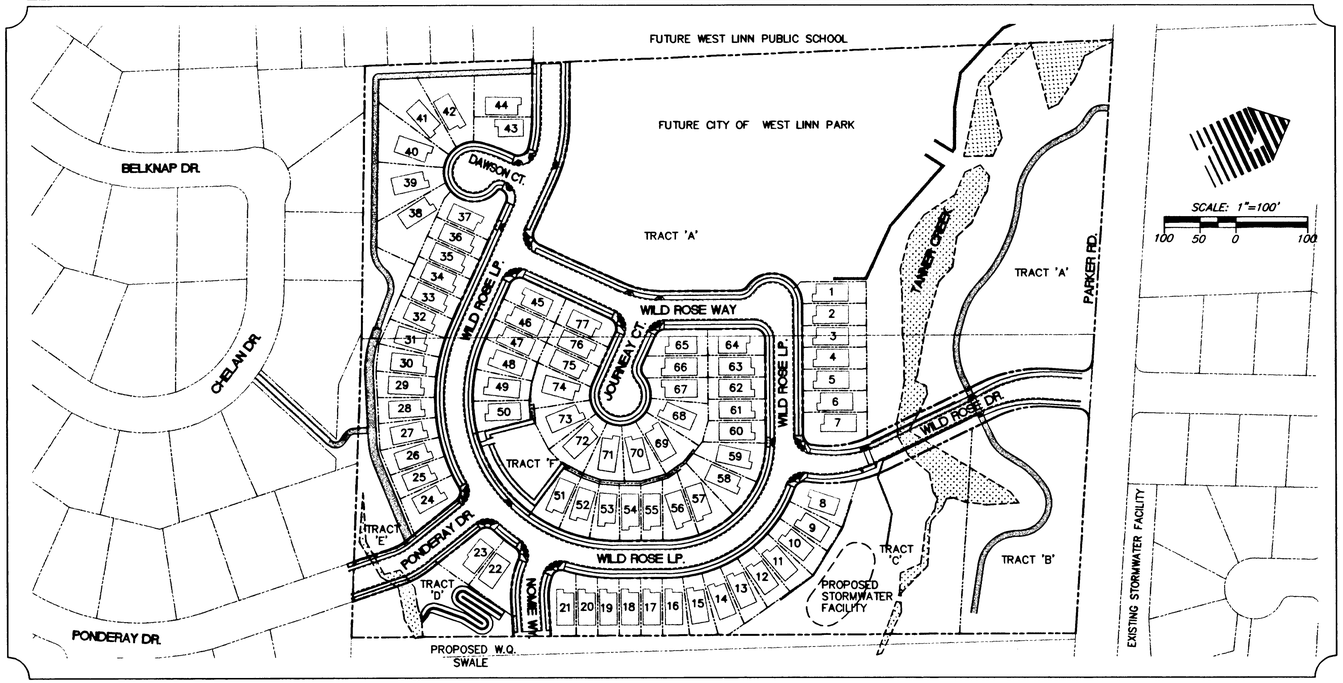

Vicinity Map

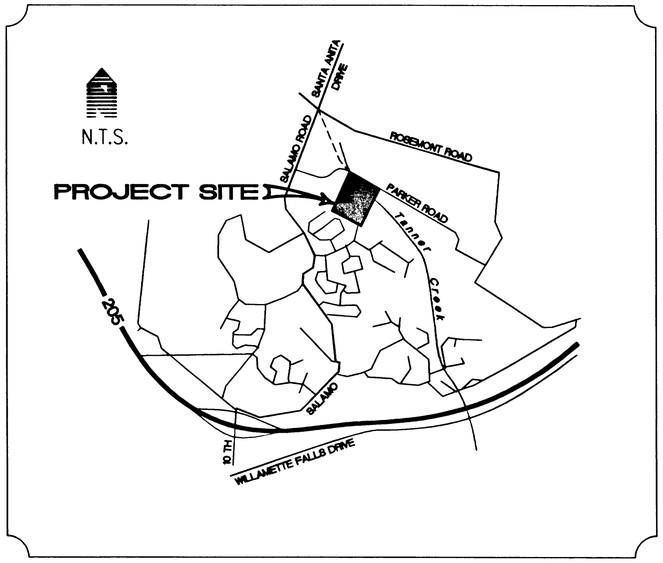

Project Team

DEVELOPER
D.R. HORTON
C/O J. T. Smith Companies
22400 Salamo Road, Ste. 204
West Linn, Oregon 97068
(503) 657-3402

CIVIL ENGINEER
WRG Design, Inc.
5415 S.W. Westgate Drive
Suite 100
Portland, OR 97221
(503) 419-2500
Project Manager: Randy Dyer, PE
Project Designers: Jesse Nemec & David Lavoie

GEOTECHNICAL ENGINEER
GeoPacific, Inc.
Jim Imbrie, PE
17700 SW Upper Boones Ferry
Portland, OR 97224-7010
(503) 598-8445

SURVEYOR
WRG Design, Inc.
5415 S.W. Westgate Drive
Suite 100
Portland, OR 97221
(503) 419-2500
Project Surveyor: Troy Tetsuka

Index of Sheets

C000	General Cover Sheet
C001	Conditions of Approval
C002	Typical Sections
C003	Existing Conditions

GRADING AND EROSION CONTROL PLANS

C004	Grading and Erosion Control Cover Sheet
C005	Grading and Erosion Control Plan
C006	Grading and Erosion Control Details & Notes
C007	Retaining Wall Profiles and Details
C008	Retaining Wall Profiles and Details
C009	Keystone Wall Stair Details
C010	Retaining Wall Details

STREET/STORM DRAINAGE CONSTRUCTION PLANS

C100	Street and Storm Drain Cover Sheet
C100A	Composite Storm Drain Plan
C101-C116	See Sheet C100 for Street/Storm Sheet Index

SANITARY SEWER/WATER CONSTRUCTION PLANS

C200	Sanitary/Water Cover Sheet
C200A	Composite Sanitary Sewer/Water Plan
C201-C211	See Sheet C200 for Sanitary/Water Sheet Index

MISCELLANEOUS

C300	Street Lighting
C301	Signage/Mailbox Plan
C302	Signage Details
L101	Planting Plan
L102	Planting Plan
L103	Landscape Notes and Details

Site Information

GENERAL LOCATION
A 19.0 acre site South of Parker Road and 1200' East of Salamo Road.

LEGAL LOCATION
A Tract of land in the Julia Ann Lewis DLC No. 54 in the SE 1/4 of Section 26 and the SW 1/4 of Section 25, Township 2 South, Range 1 East, Willamette Merdian in the City of West Linn, Clackamas County, Oregon.

BENCHMARK
City of West Linn Bench Mark 'B' is 93.5' East and 17.0' South of edge of pavement from 4-way intersection of Rosemont/Santa Ana. 3" cap on pipe with yellow Water Works LID. Elev: 667.22

FRANCHISE UTILITY CONTACTS:
PGE: Cindy Manselle - (503) 650-1411
PGE BROADBAND: Ken Murray - (503) 519-9394
N.W.N.G.: Scott Palmer - (503) 721-2449
US WEST: Rick Jansen - (503) 242-6064
AT&T: Tanya Trujillo - (503) 605-4914

Legend

- Existing Storm Features
- Existing Sanitary Features
- Existing Gas Line
- Existing Water Features
- Existing Coniferous Tree
- Existing Deciduous Tree
- Proposed Storm Features
- Proposed Sanitary Features
- Proposed Water Features
- Proposed Property/ROW Line
- Proposed ROW Center Line
- Proposed Street Light

Note: See Individual Cover Sheets for More Detailed Legends

WRG DESIGN INC.
5415 S.W. Westgate Dr., Suite 100
Portland, Oregon 97221
☎ 503 | 419-2500 FAX: 503 | 419-2600
PLANNERS • ENGINEERS • LANDSCAPE ARCHITECTS • SURVEYORS

REGISTERED PROFESSIONAL ENGINEER 19,172 OREGON JULY 15, 1997 RANDALL S. DYER
EXPIRES: 12/31/03

GENERAL COVER SHEET
MACKENZIE ROSE ESTATES - P.U.D.
WEST LINN, OREGON

J.T. SMITH COMPANIES
REAL ESTATE DEVELOPMENT
22400 SALAMO ROAD, SUITE 204
WEST LINN, OREGON 97068

RECORD DRAWING
11/26/2001
THESE RECORD DRAWINGS HAVE BEEN PREPARED, IN PART, ON THE BASIS OF INFORMATION COMPILED AND FURNISHED BY THE CONTRACTOR, REVISED CONSTRUCTION PLANS, AND FIELD OBSERVATIONS DURING CONSTRUCTION.

PROJECT NO. JTS007

DATE	01/25/01
DRAFTED	D. LAVOIE
DESIGNED	J. NEMEC
ENGINEER	R. DYER
CHECKED	

SHEET TITLE: COVER SHEET
SHEET NUMBER: C000

J:\DATA\JTS007\Autocad\AS-BUILTS\AB-CO-COVER.dwg Wed Nov 21 12:36:41 2001 DGL

CONDITIONS OF APPROVAL

City of West Linn
Final Decision Notice
Conditions of Approval as amended Findings No. 60
March 8th, 2000

The Planning Director hereby approves this proposal, File Nos. SUB-99-08/ZC-99-10/MISC-99-32, with the following conditions of approval to be satisfied prior to final platting, or guaranteed by other means agreeable to the City Planning Director and Engineer:

1. All single-family home designs shall, prior to building permit issuance, meet the following standards:
   a. At least every third house shall vary from the homes on abutting lots by varying the roof height, pitch, or angle and by using different dormer designs (e.g., shed dormer, gable dormer, etc.).
   b. All garage entryways shall be a maximum 18 feet wide.
   c. All garages shall have transom windows. At least 30 percent of garage doors shall be coved (rounded corners)
   d. No garage shall extend beyond either the first or second floor living space. Second floor pop-outs or overhangs can be used to meet this criterion.
   e. At least every third house in a row shall incorporate different materials on the front elevation to distinguish that building from adjacent homes. This shall include the use of brackets on some buildings, use of various types of decorative shingles, belly bands, different colored composition roofing, or dentils. Other architecture elements that distinguish one home from another are permitted.
   f. At least every third house in a row shall be painted differently from adjacent homes. This shall include a different body and trim color. At least 7 different body colors and 7 different trim colors shall be used so there is color diversity throughout the subdivision.
   g. All window trim shall be four-inch wide.
   h. At least half of all homes that have the entryway door behind the garage shall have covered front porches extending from the front door to the front of the garage. The remainder shall have pergolas extending a similar distance.
   i. All multiple light windows shall have at least four-inch wide mullions.

2(a). Parker Road is designated an arterial road. The applicant shall dedicate a minimum 30-foot half-width right-of-way along the site frontage for Parker Road.

2(b). Parker Road shall be constructed to a minimum 18-foot half-width paved surface with curb and gutter, 6-foot wide planter strip, and 6-foot wide sidewalk.

2(c). Parker Road shall be designed to a 35 mph design speed.

2(d). The access location of Wild Rose Drive onto Parker Road shall align with Wild Rose Drive on the north side of Parker Road. (Ref: Design Standards, Sec. 5.0015, Intersections.)

2(e). All interior streets except Ponderay Drive and cul-de-sacs shall be built to local street standards with a minimum 28-foot wide paved surface with curbs and gutters, 6-foot wide planter strips, and 6-foot wide sidewalks. Ponderay Drive shall be built with a minimum 32-foot wide paved surface with curbs and gutters and 6-foot wide planter strip and 6-foot wide sidewalk. One planter strip may be collapsed to allow sidewalk to be constructed at back of curb.

2(f). All local streets and cul-de-sacs shall be designed to meet the minimum requirements for a 25 mph. design speed, with two exceptions. Wild Rose Drive shall be designed to meet or exceed 20 mph design speed requirements, and Ponderay Drive shall be designed to meet or exceed 15 mph designed speed requirements.

2(g). All cul-de-sacs shall be built to a minimum 28-foot wide paved surface with curbs and gutters, 6-foot wide planter strips, and 6-foot wide sidewalks, and end with a 30-foot radius paved turnaround on a minimum 42-foot radius right-of-way bulb. (Ref. CDC, Section 85.200[A]).

2(h). Plans and profiles shall be prepared by a civil engineer, licensed in the state of Oregon, and submitted to the City for approval prior to construction.

3. The applicants shall install all necessary erosion control measures prior to any site clearing and grubbing.

4. The applicants shall install a maximum 16-inch water line on Parker, unless the water model indicates another size is required, and all half-street improvements on Parker contiguous to not only the Mackenzie Rose project, but also to the City Park property.

5. The applicants shall install an 8-foot wide paved trail in Tract D from Ponderay Drive to Chelan Drive, plus swale crossing, as needed.

6. A 5-foot high chain link fence shall be installed 10 feet beyond the dripline of the Oak tree in Tract F during construction and prior to any site work.

7. An ESEE analysis shall be prepared and approved by the Planning Director for all wetland disturbances per CDC Chapter 32. Mitigation of all disturbed areas shall be implemented per CDC Chapter 32.

8. The applicant shall install a drainage intercept system at the rear of lots 41, 42, 44, 38 and 39 to capture and direct water into the creek in Tract D.

9. The 20-foot wide corridor generally southwest of Mackenzie Court shall accommodate an eight-foot wide path. The path shall connect the trail identified in Condition #5 and finally connect with the west of Mackenzie Road. The path shall match downstream or adjacent trail surfaces (asphalt or gravel). This corridor shall also accommodate storm drainage lines and shall have columnar trees planted 30 feet on center for its entire length along the south and west sides. A four-foot high fence shall be required along both sides except where adequate fencing exists.

10. WILD ROSE WAY, Road, and Court and Rose Court shall be renamed so that they do not duplicate existing street names. Names must be approved by the Planning Director.

11. Lots 24, 23, 22, 21, 8, 7, 67, 68, 80, 48, 37, and 43 must all meet the curbcut setback standards of CDC Section 48.060(C)(6) (e.g., by consolidated driveways or side-loading garages).

12. Stop signs shall be installed at both ends of the street, which crosses Tanner Creek. Street lights shall be installed at the sag of the vertical curve. A textured pedestrian crosswalk, or alternate design, shall be constructed near the sag of the vertical curve. Details for this crosswalk and the exact location shall be submitted to City for approval prior to construction.

13. All trails, paths, or bikeways shall match downstream or adjacent trail surfaces (asphalt or gravel). Paths and bikeways shall be eight feet wide.

14(a). Water quality treatment facilities shall be designed by a Civil Engineer, Licensed in the state of Oregon, and submitted to the City for approval prior to construction. All facilities shall be designed per the City of Portland Stormwater Management Manual, with the exception that no stormceptors or similar commercial water quality assemblies are allowed. (Ref: Design Standards, Sec. 2.0053, Facility Design.)

(b) On-site detention shall be provided to reduce the stormwater discharge from the 24-hour, 25-year storm event after total site development to the 24-hour, 25-year event stormwater discharge for pre-developed conditions.)Ref: Storm Drainage Master Plan, Sec. 8.1.1 and Community Development Code, Sec. 85.200 H,2. Pg. 85-41.)

(c) The 24-hour, 100-year storm event shall be analyzed for street flows and flood protection, including all on-site facilities and off-site conveyances, (Ref: Storm Drainage Master Plan, Sec. 8.1.1.)

(d) A revised stormwater technical information report shall be prepared by a Civil Engineer, licensed in the state of Oregon and include but not be limited to the following information:
   1) Table of contents listing all tables, figures, and attachments.
   2) Vicinity maps including site location. flood plain maps, and soil maps.
   3) Development plan showing sub-basins and acreages used in calculations; easements and right-of-ways; contour maps at maximum 2-foot contour intervals; all storage volumes, dimensions, and elevations for all facilities.
   4) Project overview describing drainage to, from and through the site, and a general description of all stormwater improvements on-site.
   5) Downstream analysis.
   6) Quantity control analysis and design.
   7) Conveyance system analysis and design.
   8) Water quality analysis and design.
   9) Soils evaluation.
   10) Special reports and studies, including geotechnical, wetland, flood plain or structural design reports.
   11) Maintenance and operation manual for privately maintained storm water control or treatment facilities.

(e) A sedimentation and erosion control plan shall be prepared by a Civil Engineer, Licensed in the state of Oregon, and comply with the Clackamas County Department of Utilities Technical Guidance Handbook.

(f) Drains shall be installed at the bases of all cut slopes where the base of the cut slope is within 20 feet of any structure, including pavement structures unless the geotechnical engineer revises his report to state that drains are not required. (Ref: Geo Design, Inc. Geo technical Report.)

(g) Comply with all other design criteria per City Standards, Construction Specifications, Standard Drawings, and the Storm Drainage Master Plan.

15. The berm shown along the east side of lots 14 through 21 shall be designed per engineering code at the pre-construction phase.

16. The layout of Mackenzie Rose subdivision shall be depicted in pages A-323, A-324, and A-328 except as modified in the southwest corner by staff exhibit pgs. 21 and 23 and conditions of approval.

WRG NOTE:

LOT NUMBER EQUATIONS, REFERENCE NOTE #8, #11 & #15:

OLD NUMBER	= NEW NUMBER
38 & 39	38
40	39
41	40
42	41
43 & 44	42
45	43
48	45
67	64
68	65
80	77

W R G DESIGN INC.
5415 S.W. Westgate Dr., Suite 100
Portland, Oregon 97221
503|419-2500 FAX: 503|419-2600
PLANNERS ■ ENGINEERS ■ LANDSCAPE ARCHITECTS ■ SURVEYORS

REGISTERED PROFESSIONAL ENGINEER 19,172 OREGON JULY 15, 1997 RANDALL S. DYER
EXPIRES: 12/31/03

CONDITIONS OF APPROVAL
MACKENZIE ROSE ESTATES - P.U.D.
WEST LINN, OREGON

J.T. SMITH COMPANIES
REAL ESTATE DEVELOPMENT
22400 SALAMO ROAD, SUITE 204
WEST LINN, OREGON 97068

RECORD DRAWING
11/26/2001
THESE RECORD DRAWINGS HAVE BEEN PREPARED, IN PART, ON THE BASIS OF INFORMATION COMPILED AND FURNISHED BY THE CONTRACTOR, REVISED CONSTRUCTION PLANS, AND FIELD OBSERVATIONS DURING CONSTRUCTION.

PROJECT NO.
JTS007

DATE	01/25/01
DRAFTED	D. LAVOIE
DESIGNED	J NEMEC
ENGINEER	R. DYER
CHECKED	

SHEET TITLE
CONDITIONS
SHEET NUMBER
C001

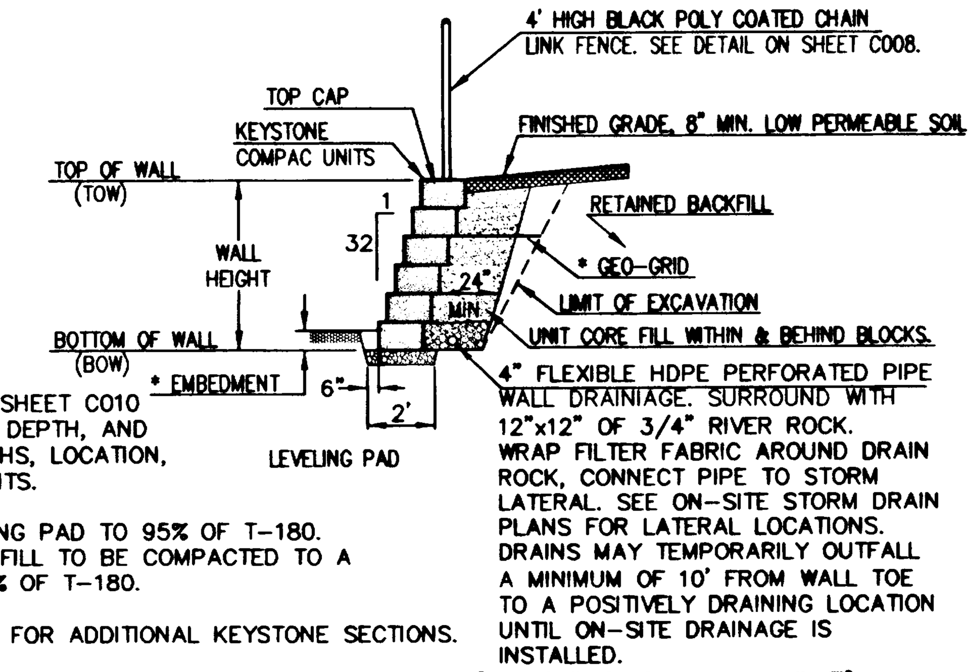

* NOTE:
SEE TABLES ON SHEET C010 FOR EMBEDMENT DEPTH, AND GEO-GRID LENGTHS, LOCATION, AND REQUIREMENTS.

COMPACT LEVELING PAD TO 95% OF T-180.
UNIT CORE BACKFILL TO BE COMPACTED TO A MAXIMUM OF 92% OF T-180.

SEE SHEET C010 FOR ADDITIONAL KEYSTONE SECTIONS.

Keystone Type Wall (Wall # 3 + # 4 + # 5)
TYPICAL SECTION
N.T.S.

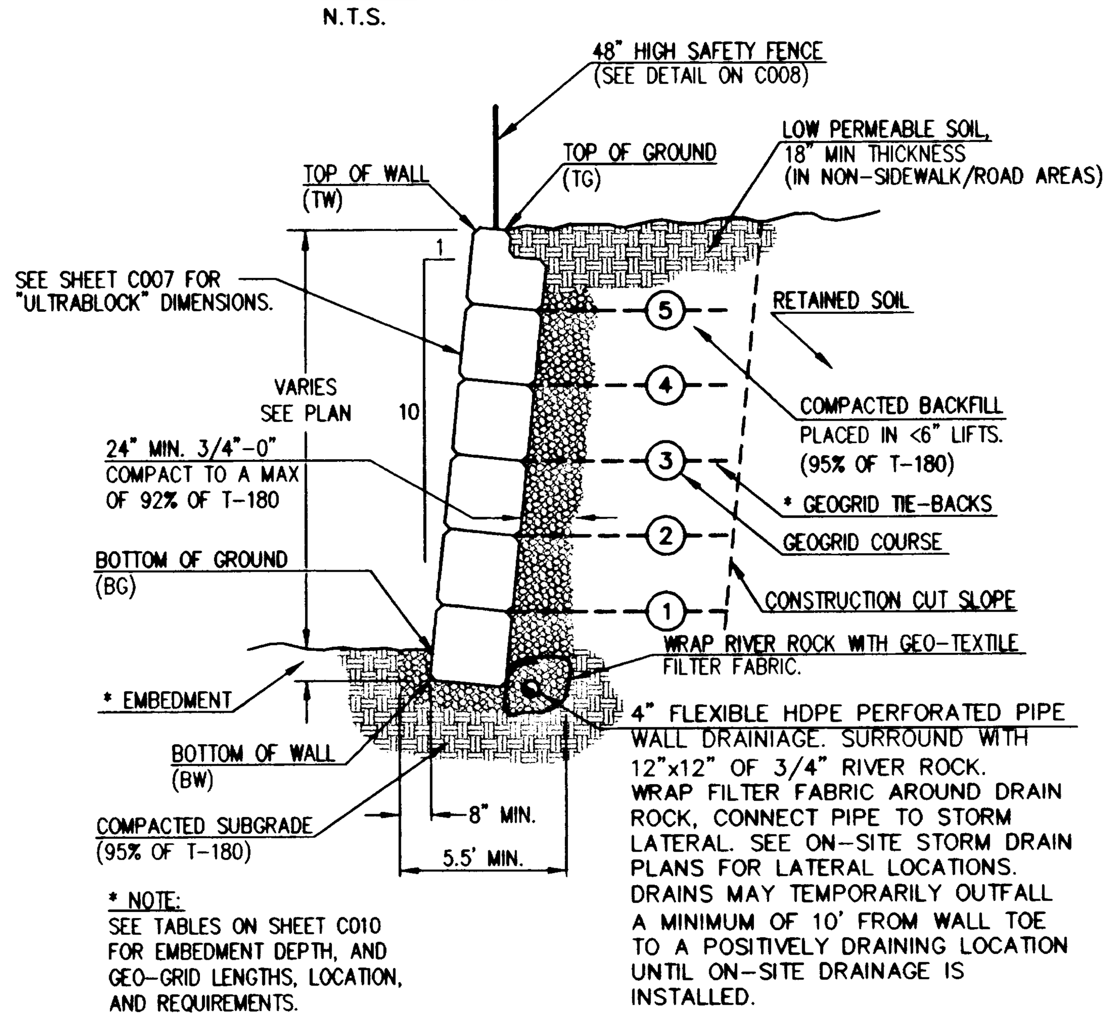

* NOTE:
SEE TABLES ON SHEET C010 FOR EMBEDMENT DEPTH, AND GEO-GRID LENGTHS, LOCATION, AND REQUIREMENTS.

COMPACT LEVELING PAD TO 95% OF T-180.
UNIT CORE BACKFILL TO BE COMPACTED TO A MAXIMUM OF 92% OF T-180.

Ultra Block Type Wall (Wall # 1 + # 2)
TYPICAL SECTION
N.T.S.

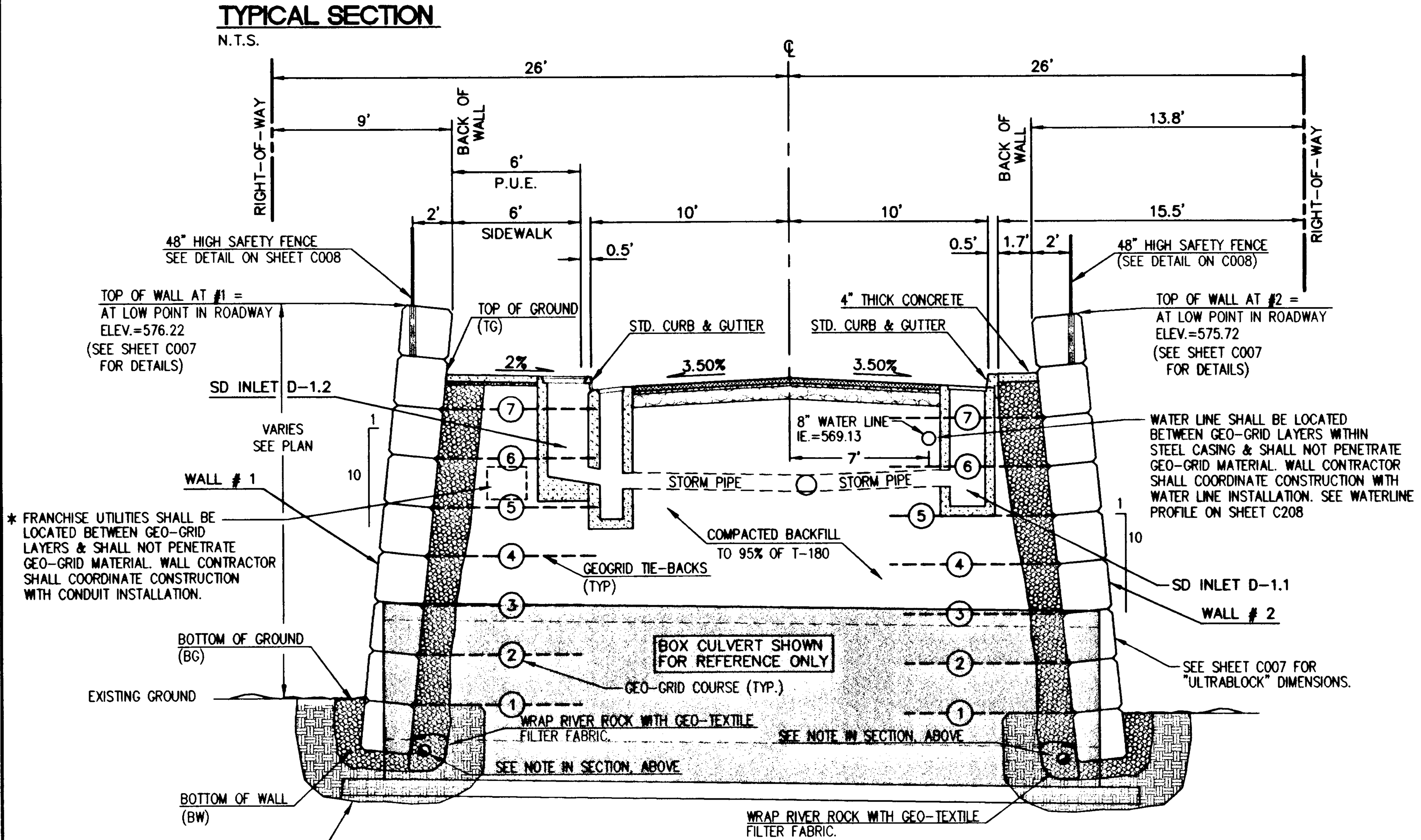

Wild Rose Dr. (approximate sta. 2+20 to sta. 3+85)
TYPICAL SECTION
SCALE: 1" = 5'

* CONTRACTOR TO COORDINATE WITH FRANCHISE UTILITY CO. FOR NUMBER & SIZE OF CONDUITS REQUIRED PRIOR TO WALL CONSTRUCTION.

BOULDER WALL CONSTRUCTION NOTES.

1. FOR WALLS SUPPORTING ENGINEERED FILL, THE FILL SHOULD BE OVERBUILT AS A TEMPORARY 1H:1V SLOPE STARTING AT A MINIMUM DISTANCE OF H/3 FROM THE BASE OF THE WALL. THE SLOPE SHOULD THEN BE TRIMMED BACK SUCH THAT THE WALL IS CONSTRUCTED AGAINST A STABLE EXCAVATED FACE OF COMPACTED (95% OF T-180) FILL.

2. KEYWAY SUBGRADE AND EMBEDMENT SHOULD BE VERIFIED BY THE GEOTECHNICAL ENGINEER.

3. ROCKS SHOULD HAVE A CUBICAL, TABULAR OR SEMI-RECTANGULAR SHAPE THAT ROUGHLY MATCHES THE SPACE CREATED BY THE PREVIOUS ROCK COURSE. ROCKS SHOULD BE LAID FLAT WITH THE LONG DIMINSION ORIENTED PERPENDICULAR TO THE WALL AND EXTENDING TOWARDS THE EXCAVATION FACE. ROCKS SHOULD BE STAGGERED SUCH THAT EACH ROCK BEARS ON AT LEAST TWO ROCKS BELOW AND VERTICAL JOINTS ARE DISCONTINUOUS. ROCK PLACEMENT AND WALL INTEGRITY SHOULD BE VERIFIED BY THE CONTRACTOR, BY LIGHTLY HAMMERING ON THE TOP OF EACH ROCK WITH EXCAVATOR BUCKET.

4. MINIMUM ROCK SIZES SHOULD BE DETERMINED USING THE ROCK SIZE SCHEDULE BELOW, WHERE "D" IS GREATER THAN 9', A DOUBLE ROW OF BOULDERS SHOULD BE USED TO ATTAIN THE MINIMUM BASE WIDTH INDICATED. ROCKS SHOULD BE NO SMALLER THAN 650 lbs.

5. VOIDS GREATER THAN 6" WHERE THERE IS NO CONTACT BETWEEN ADJACENT ROCKS SHOULD BE CHINKED WITH SMALLER ROCK.

6. BACKFILL BEHIND THE ROCKS SHOULD CONSIST OF AN AVERAGE 12" WIDE SHEET 4"-0" CRUSHED AGGREGATE WITH NO MORE THAN 7% FINES PASSING THE U.S. STANDARD NO. 200 SIEVE. BACKFILL SHOULD BE PLACED IN 12" LIFTS AND LIGHTLY COMPACTED TO AN UNYIELDING STATE AS EACH COURSE OF ROCKS IS PLACED.

7. THIS DETAIL IS APPLICABLE FOR THE SUBJECT PROJECT AND WALL ONLY, AND SHOULD NOT BE USED ON ANY OTHER PROJECTS OR WALLS UNLESS APPROVED BY THE GEOTECHNICAL ENGINEER.

GENERAL WALL CONSTRUCTION NOTES.

1. LOW PERMEABLE SOIL SHALL BE A WELL COMPACTED SOIL WITH SUFFICIENT CLAY CONTENT THAT SURFACE WATER WILL SLICK OFF THE TOP RATHER THAN PENETRATE THE SURFACE.

2. UNIT CORE SHALL BE CLEAN AGGREGATE ROCK PER THE SPECIFICATIONS OF EACH WALL TYPE THAT WILL FILL THE VOID BETWEEN THE RETAINED BACKFILL AND THE BACK OF WALL. UNIT CORE SHOULD TYPICALLY BE COMPACTED ONLY UNTIL AN UNYIELDING STATE IS ACHIEVED TO MINIMIZE EXCESS PRESSURE ON THE WALL STRUCTURE. HAND TAMPING EQUIPMENT IS ACCEPTABLE.

3. THE CONTRACTOR SHALL COORDINATE WITH THE GEOTHECHNICAL ENGINEER THROUGHOUT THE DURATION OF ANY RETAINING WALL CONSTRUCTION TO ENSURE ADEQUATE COMPACTION OF FOOTINGS AND SUBGRADE, AND ADHERANCE TO THE SPECIFICATIONS PROVIDED.

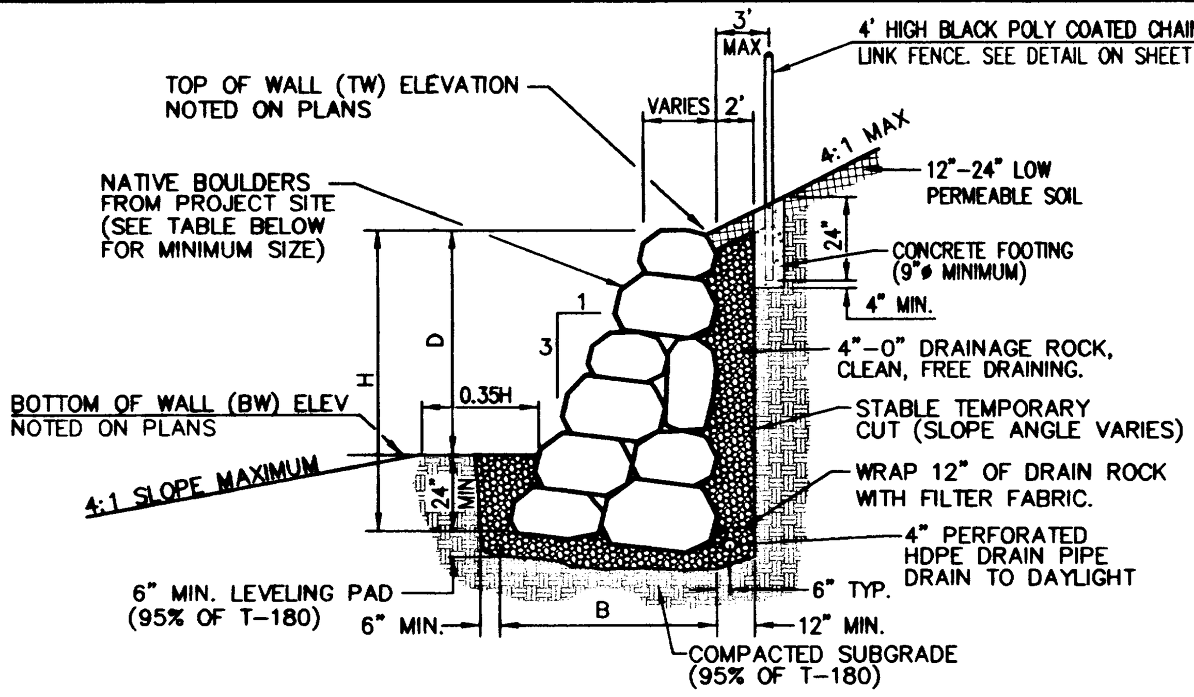

ROCK SIZE SCHEDULE

D (FT)	B (FT)	MIN. WEIGHT (LBS)	TYPICAL SIZE (IN)
9+ (SEE NOTE 4)	10	3,200	40 x 34 x 24 32 x 32 x 32
7	6.5	2,400	38 x 32 x 22 29 x 29 x 29
5	5	1,900	34 x 28 x 20 27 x 27 x 27
3	3.75	1,200	32 x 27 x 16 23 x 23 x 23
1	2.5	650	24 x 18 x 14 19 x 19 x 19

MAXIMUM HEIGHT (H) = 15.0'

Boulder Wall (Wall # 6)
TYPICAL SECTION
N.T.S.

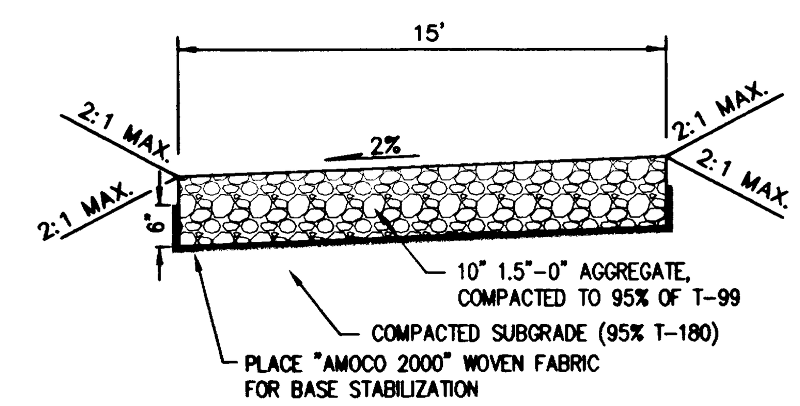

Gravel Maintenance Access
TYPICAL SECTION
N.T.S.

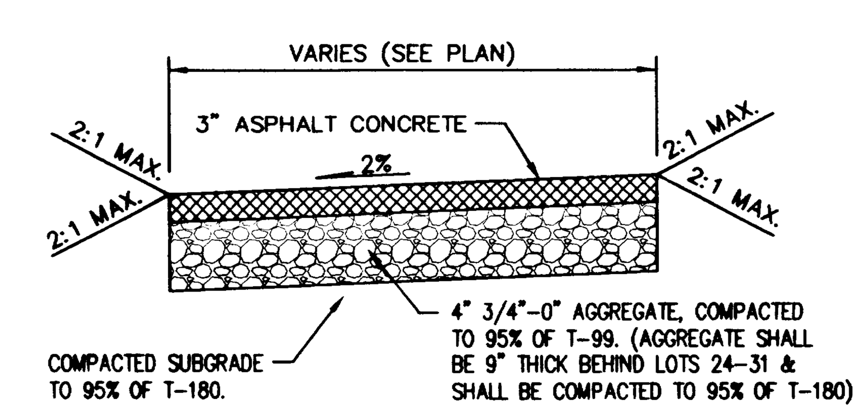

Asphalt Path
TYPICAL SECTION
N.T.S.

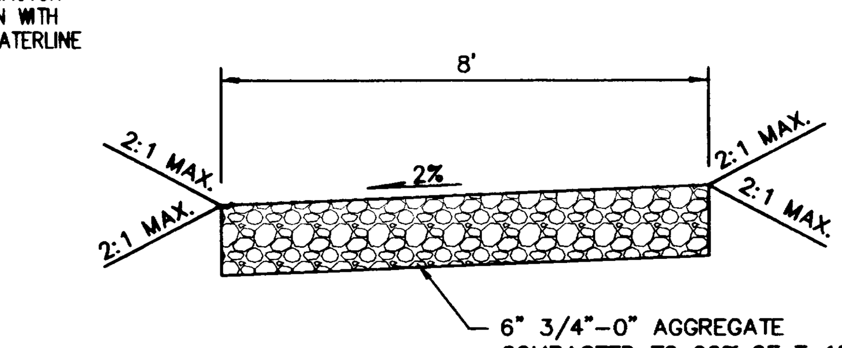

Gravel Path
TYPICAL SECTION
N.T.S.

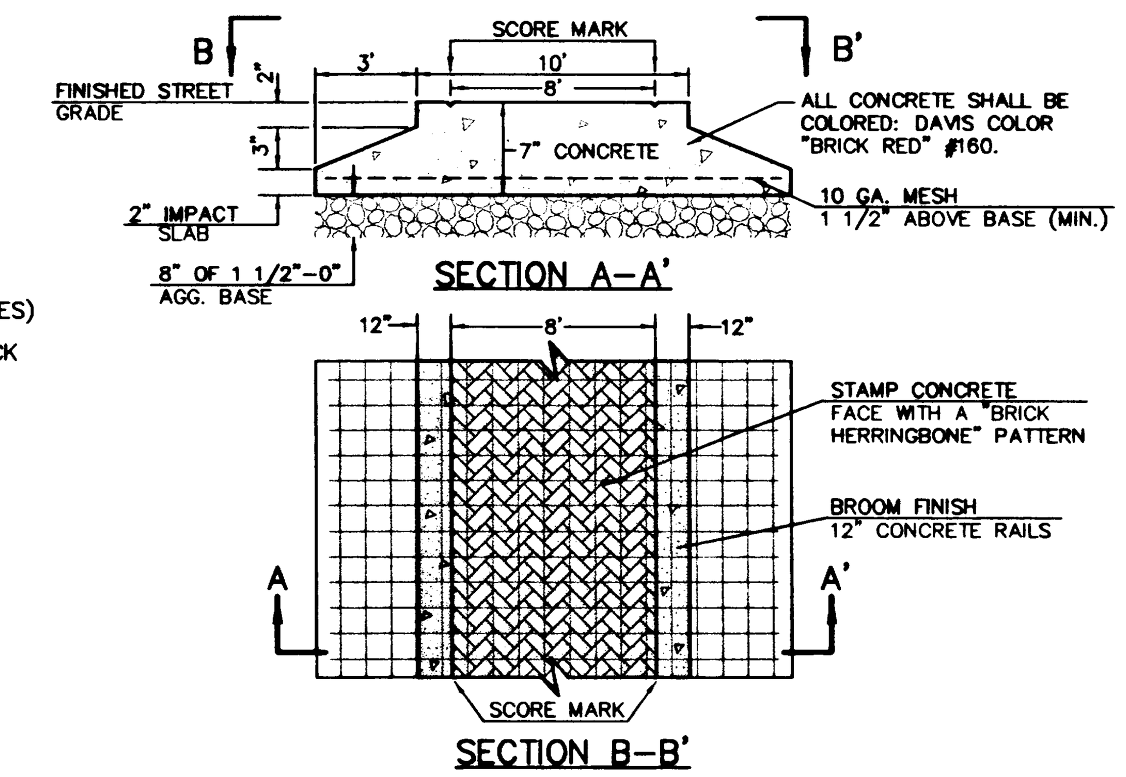

TEXTURED CROSS WALK
TYPICAL SECTION
N.T.S.

CROSS WALK NOTES:

1. PLACE EXPANSION JOINT @ CL.
2. CONCRETE SHALL ACHIEVE A COMPRESSIVE STRENGTH OF 4000 PSI IN 28 DAYS.
3. CONTRACTION JOINTS SHALL BE PLACED AT MIDPOINT BETWEEN EXPANSION JOINT. MAXIMUM SPACING OF 12" O.C.
4. "BRICK RED" SHALL BE DAVIS COLOR BRICK RED #160 APPLICATION RATE OF 4 LBS. PER 94 LB. SACK OF CEMENT OR APPROVED EQUAL.
5. ALL COLORED PAVEMENTS SHALL BE FULL DEPTH COLORING. APPLICATION RATE OF 4 LBS. PER 94 LB. SACK OF CEMENT. (INTEGRAL MIX)
6. "BRICK HERRINGBONE" SHALL BE BRICKFORM'S HERRINGBONE OLD BRICK, OR APPROVED EQUAL.
7. WORKMANSHIP SHALL BE SUCH THAT THE FINISHED PRODUCT IS UNIFORM AND DOES NOT LEAVE "BURS" OR EDGES WHICH WILL EASILY BREAK OFF.

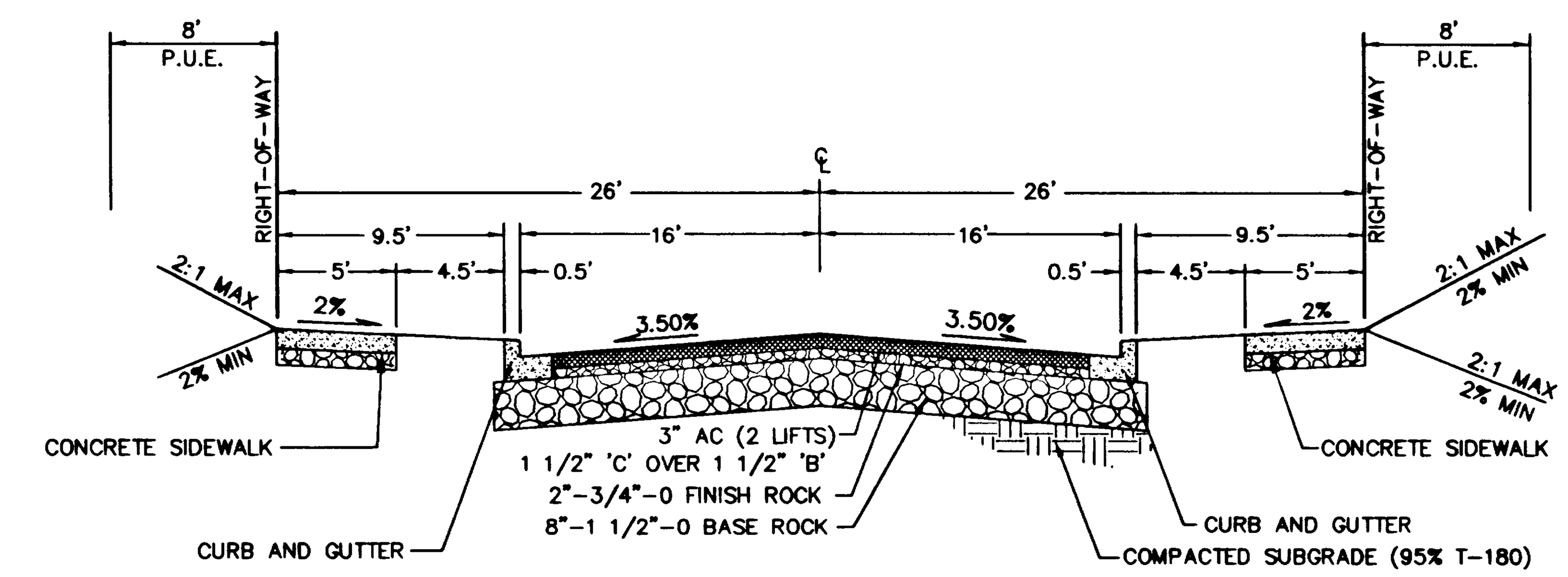

Ponderay Drive
TYPICAL SECTION
N.T.S.

NOTE: P.U.E. = PUBLIC UTILITY EASEMENT

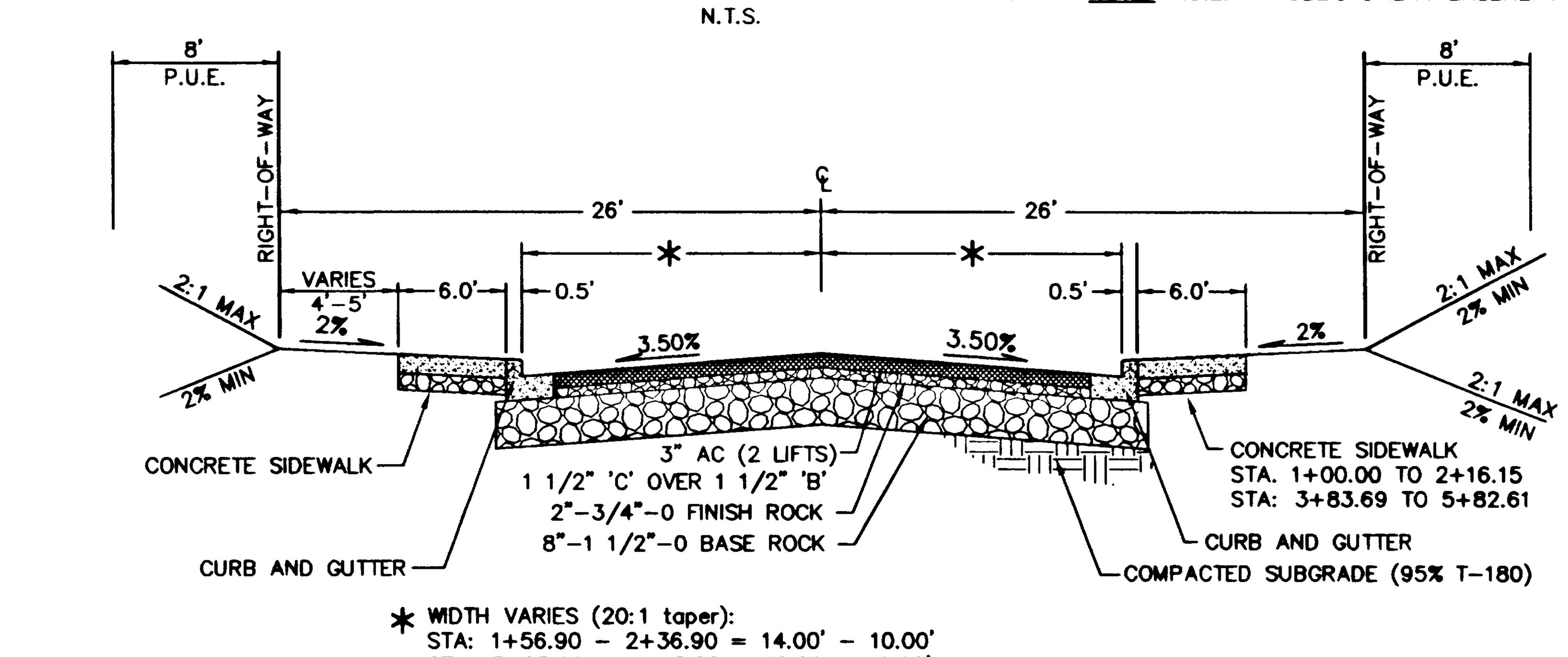

* WIDTH VARIES (20:1 taper):
STA: 1+56.90 - 2+36.90 = 14.00' - 10.00'
STA: 3+83.69 - 4+93.88 = 10.00 - 16.00'

Wild Rose Dr. (Sta. 1+00.00 to Sta. 2+36.90 + Sta. 3+83.69 to Sta. 5+82.61)
TYPICAL SECTION
N.T.S.

NOTE: P.U.E. = PUBLIC UTILITY EASEMENT

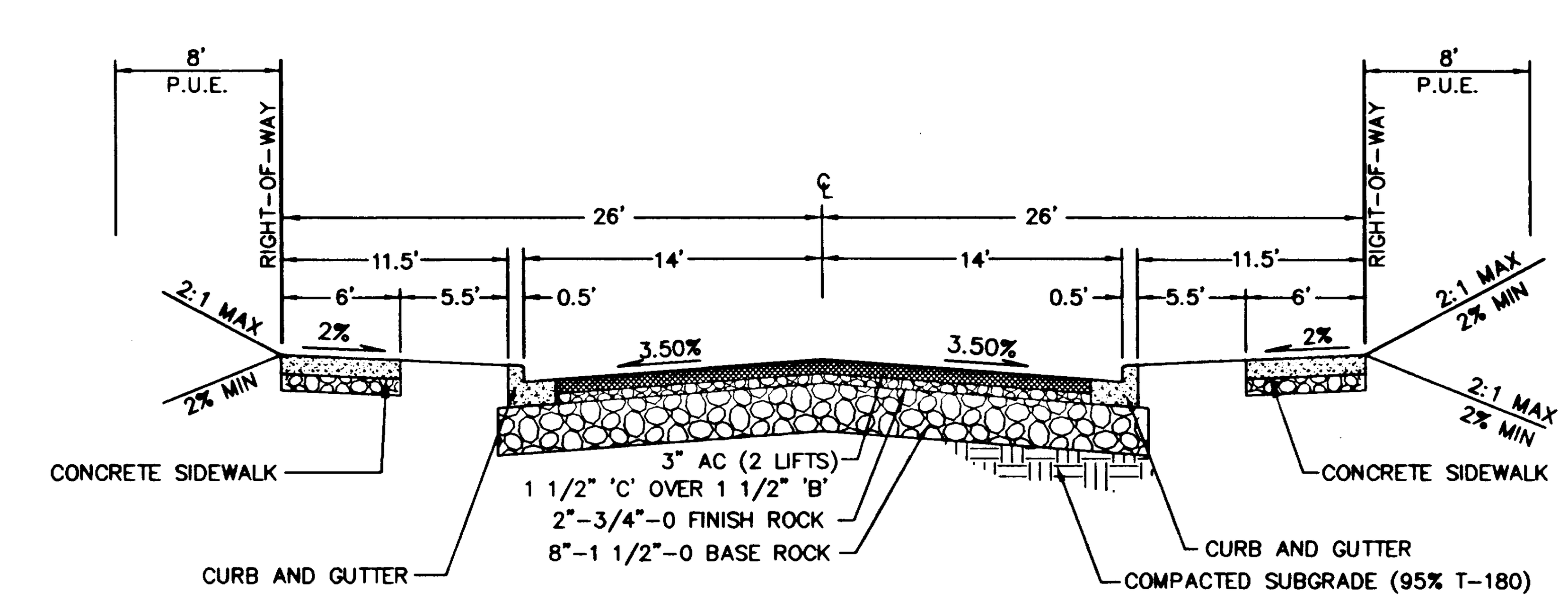

Wild Rose Loop., Wild Rose Wy., Dawson Ct., Journeay Ct., Nomie Way.
TYPICAL SECTION
N.T.S.

NOTE: P.U.E. = PUBLIC UTILITY EASEMENT

W R G DESIGN INC
5415 S.W. Westgate Dr., Suite 100
Portland, Oregon 97221
503 | 419-2500 FAX: 503 | 419-2600
PLANNERS • ENGINEERS • LANDSCAPE ARCHITECTS • SURVEYORS

REGISTERED PROFESSIONAL ENGINEER 19,172 OREGON JULY 15, 1997 RANDALL S. DYER
EXPIRES: 12/31/03

TYPICAL SECTIONS
MACKENZIE ROSE ESTATES - P.U.D.
WEST LINN, OREGON

J.T. SMITH COMPANIES
REAL ESTATE DEVELOPMENT 22400 SALAMO ROAD, SUITE 204 WEST LINN, OREGON 97068

RECORD DRAWING
11/26/2001
THESE RECORD DRAWINGS HAVE BEEN PREPARED, IN PART, ON THE BASIS OF INFORMATION COMPILED AND FURNISHED BY THE CONTRACTOR, REVISED CONSTRUCTION PLANS, AND FIELD OBSERVATIONS DURING CONSTRUCTION.

PROJECT NO.
JTS007

DATE	01/25/01
DRAFTED	D. LAVOIE
DESIGNED	J NEMEC
ENGINEER	R. DYER
CHECKED	

SHEET TITLE
STREET SECTIONS
SHEET NUMBER
C002

J:\DATA\JTS007\Autocad\AS-BUILTS\AB-CD-DETAILS.dwg Wed Nov 21 12:55:58 2001 DSL

TOPOGRAPHIC SURVEY

LOCATED IN THE SE 1/4 OF SECTION 26 AND
THE SW 1/4 OF SECTION 25, T. 2 S., R. 1 E., W.M.,
CITY OF WEST LINN, CLACKAMAS COUNTY, OREGON

BENCHMARK

CITY OF WEST LINN BENCH MARK 'B' IS 93.5' EAST AND 17.0' SOUTH OF EDGE OF PAVEMENT FROM 5-WAY INTERSECTION OF ROSEMONT/SANTA ANA. 3" CAP ON PIPE WITH YELLOW WATER WORKS LID.
ELEV. 667.22

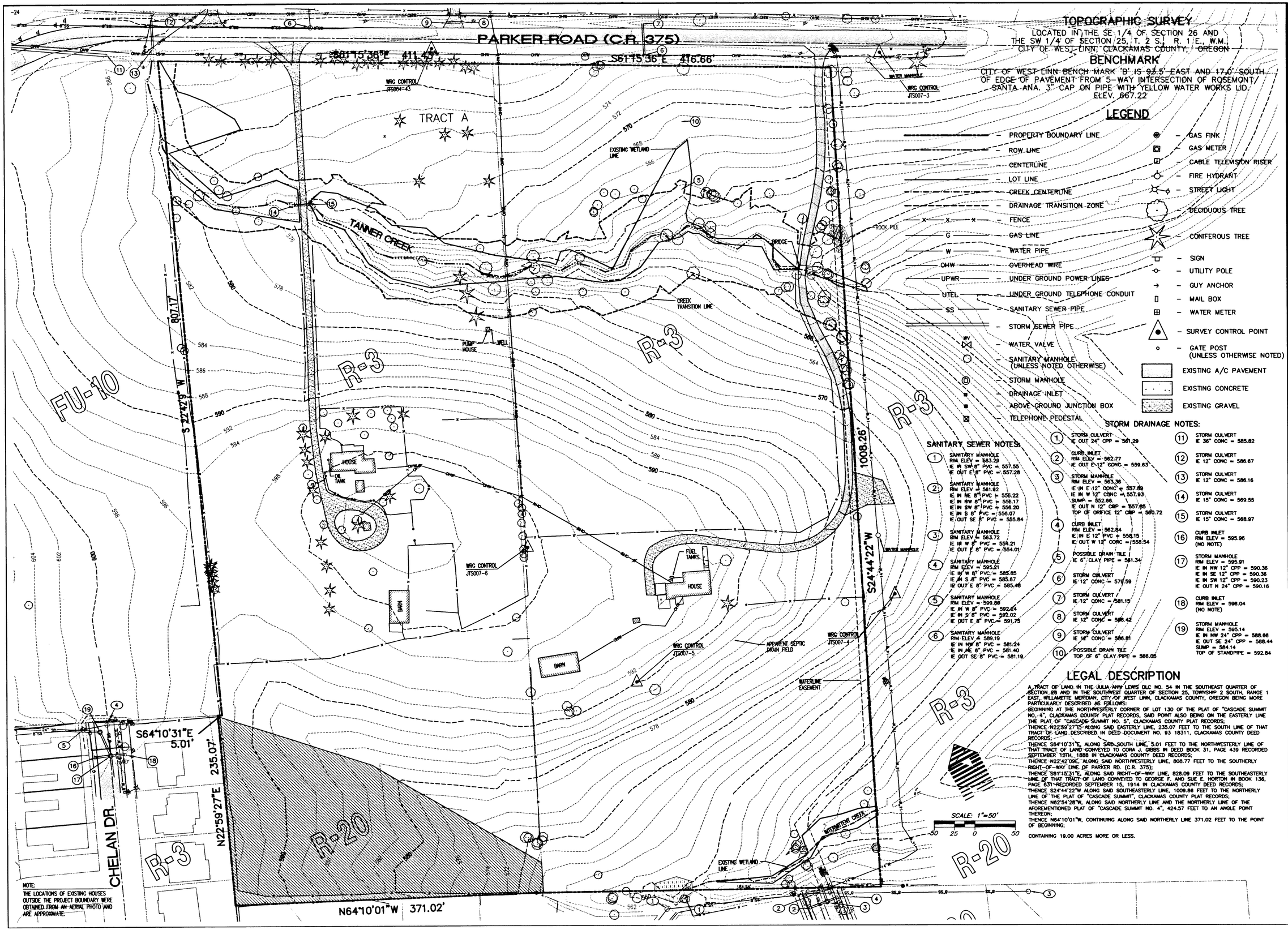

LEGEND

- PROPERTY BOUNDARY LINE
- ROW LINE
- CENTERLINE
- LOT LINE
- CREEK CENTERLINE
- DRAINAGE TRANSITION ZONE
- FENCE
- G — GAS LINE
- W — WATER PIPE
- OHW — OVERHEAD WIRE
- UPWR — UNDER GROUND POWER LINES
- UTEL — UNDER GROUND TELEPHONE CONDUIT
- SS — SANITARY SEWER PIPE
- STORM SEWER PIPE
- WV — WATER VALVE
- SANITARY MANHOLE (UNLESS NOTED OTHERWISE)
- STORM MANHOLE
- DRAINAGE INLET
- ABOVE GROUND JUNCTION BOX
- TELEPHONE PEDESTAL
- GAS FINK
- GAS METER
- CABLE TELEVISION RISER
- FIRE HYDRANT
- STREET LIGHT
- DECIDUOUS TREE
- CONIFEROUS TREE
- SIGN
- UTILITY POLE
- GUY ANCHOR
- MAIL BOX
- WATER METER
- SURVEY CONTROL POINT
- GATE POST (UNLESS OTHERWISE NOTED)
- EXISTING A/C PAVEMENT
- EXISTING CONCRETE
- EXISTING GRAVEL

SANITARY SEWER NOTES:

1. SANITARY MANHOLE
   RIM ELEV = 563.29
   IE IN SW 8" PVC = 557.55
   IE OUT E 8" PVC = 557.28
2. SANITARY MANHOLE
   RIM ELEV = 561.92
   IE IN NE 8" PVC = 558.22
   IE IN NW 8" PVC = 558.17
   IE IN SW 8" PVC = 558.20
   IE IN S 8" PVC = 556.07
   IE OUT SE 8" PVC = 555.84
3. SANITARY MANHOLE
   RIM ELEV = 563.72
   IE IN W 8" PVC = 554.21
   IE OUT E 8" PVC = 554.01
4. SANITARY MANHOLE
   RIM ELEV = 595.21
   IE IN W 8" PVC = 585.85
   IE IN S 8" PVC = 585.67
   IE OUT E 8" PVC = 585.48
5. SANITARY MANHOLE
   RIM ELEV = 599.88
   IE IN W 8" PVC = 592.24
   IE IN S 8" PVC = 592.02
   IE OUT E 8" PVC = 591.75
6. SANITARY MANHOLE
   RIM ELEV = 589.19
   IE IN NW 8" PVC = 581.24
   IE IN NE 8" PVC = 581.40
   IE OUT SE 8" PVC = 581.19

STORM DRAINAGE NOTES:

1. STORM CULVERT
   IE OUT 24" CPP = 561.29
2. CURB INLET
   RIM ELEV = 562.77
   IE OUT E 12" CONC = 559.63
3. STORM MANHOLE
   RIM ELEV = 563.38
   IE IN E 12" CONC = 557.69
   IE IN W 12" CONC = 557.93
   SUMP = 552.68
   IE OUT N 12" CMP = 557.85
   TOP OF ORIFICE 12" CMP = 560.72
4. CURB INLET
   RIM ELEV = 562.84
   IE IN E 12" PVC = 558.15
   IE OUT W 12" CONC = 558.54
5. POSSIBLE DRAIN TILE
   IE 6" CLAY PIPE = 561.34
6. STORM CULVERT
   IE 12" CONC = 579.59
7. STORM CULVERT
   IE 12" CONC = 581.15
8. STORM CULVERT
   IE 12" CONC = 586.42
9. STORM CULVERT
   IE 12" CONC = 586.81
10. POSSIBLE DRAIN TILE
    TOP OF 6" CLAY PIPE = 586.05
11. STORM CULVERT
    IE 36" CONC = 585.82
12. STORM CULVERT
    IE 12" CONC = 586.67
13. STORM CULVERT
    IE 12" CONC = 586.16
14. STORM CULVERT
    IE 15" CONC = 569.55
15. STORM CULVERT
    IE 15" CONC = 568.97
16. CURB INLET
    RIM ELEV = 595.96
    (NO NOTE)
17. STORM MANHOLE
    RIM ELEV = 595.91
    IE IN NW 12" CPP = 590.36
    IE IN SE 12" CPP = 590.36
    IE IN SW 12" CPP = 590.23
    IE OUT N 24" CPP = 590.16
18. CURB INLET
    RIM ELEV = 596.04
    (NO NOTE)
19. STORM MANHOLE
    RIM ELEV = 595.14
    IE IN NW 24" CPP = 588.66
    IE OUT SE 24" CPP = 588.44
    SUMP = 584.14
    TOP OF STANDPIPE = 592.84

LEGAL DESCRIPTION

A TRACT OF LAND IN THE JULIA ANN LEWIS DLC NO. 54 IN THE SOUTHEAST QUARTER OF SECTION 26 AND IN THE SOUTHWEST QUARTER OF SECTION 25, TOWNSHIP 2 SOUTH, RANGE 1 EAST, WILLAMETTE MERIDIAN, CITY OF WEST LINN, CLACKAMAS COUNTY, OREGON BEING MORE PARTICULARLY DESCRIBED AS FOLLOWS:

BEGINNING AT THE NORTHWESTERLY CORNER OF LOT 130 OF THE PLAT OF "CASCADE SUMMIT NO. 4", CLACKAMAS COUNTY PLAT RECORDS, SAID POINT ALSO BEING ON THE EASTERLY LINE THE PLAT OF "CASCADE SUMMIT NO. 5", CLACKAMAS COUNTY PLAT RECORDS;
THENCE N22°59'27"E ALONG SAID EASTERLY LINE, 235.07 FEET TO THE SOUTH LINE OF THAT TRACT OF LAND DESCRIBED IN DEED DOCUMENT NO. 93 18311, CLACKAMAS COUNTY DEED RECORDS;
THENCE S64°10'31"E, ALONG SAID SOUTH LINE, 5.01 FEET TO THE NORTHWESTERLY LINE OF THAT TRACT OF LAND CONVEYED TO CORA J. GIBBS IN DEED BOOK 31, PAGE 439 RECORDED SEPTEMBER 12TH, 1888 IN CLACKAMAS COUNTY DEED RECORDS;
THENCE N22°42'09E, ALONG SAID NORTHWESTERLY LINE, 808.77 FEET TO THE SOUTHERLY RIGHT-OF-WAY LINE OF PARKER RD. (C.R. 375);
THENCE S61°15'31"E, ALONG SAID RIGHT-OF-WAY LINE, 828.09 FEET TO THE SOUTHEASTERLY LINE OF THAT TRACT OF LAND CONVEYED TO GEORGE F. AND SUE E. HORTON IN BOOK 136, PAGE 631 RECORDED SEPTEMBER 15, 1914 IN CLACKAMAS COUNTY DEED RECORDS;
THENCE S24°44'22"W ALONG SAID SOUTHEASTERLY LINE, 1009.86 FEET TO THE NORTHERLY LINE OF THE PLAT OF "CASCADE SUMMIT", CLACKAMAS COUNTY PLAT RECORDS;
THENCE N62°54'28"W, ALONG SAID NORTHERLY LINE AND THE NORTHERLY LINE OF THE AFOREMENTIONED PLAT OF "CASCADE SUMMIT NO. 4", 424.57 FEET TO AN ANGLE POINT THEREON;
THENCE N64°10'01"W, CONTINUING ALONG SAID NORTHERLY LINE 371.02 FEET TO THE POINT OF BEGINNING;

CONTAINING 19.00 ACRES MORE OR LESS.

NOTE:
THE LOCATIONS OF EXISTING HOUSES OUTSIDE THE PROJECT BOUNDARY WERE OBTAINED FROM AN AERIAL PHOTO AND ARE APPROXIMATE.

WRG DESIGN, INC.
5415 S.W. Westgate Dr., Suite 100
Portland, Oregon 97221
☎ 503 | 419-2500 FAX: 503 | 419-2600
PLANNERS ▪ ENGINEERS ▪ LANDSCAPE ARCHITECTS ▪ SURVEYORS

REGISTERED PROFESSIONAL ENGINEER 19,172 OREGON JULY 15, 1997 RANDALL S. DYER
EXPIRES: 12/31/03

EXISTING CONDITIONS
MACKENZIE ROSE ESTATES - P.U.D.
WEST LINN, OREGON

J.T. SMITH COMPANIES
REAL ESTATE DEVELOPMENT
22400 SALAMO ROAD, SUITE 204
WEST LINN, OREGON 97068

RECORD DRAWING
11/26/2001

THESE RECORD DRAWINGS HAVE BEEN PREPARED, IN PART, ON THE BASIS OF INFORMATION COMPILED AND FURNISHED BY THE CONTRACTOR, REVISED CONSTRUCTION PLANS, AND FIELD OBSERVATIONS DURING CONSTRUCTION.

PROJECT NO. JTS007

DATE	01/25/01
DRAFTED	D. LAVOIE
DESIGNED	J NEMEC
ENGINEER	R. DYER
CHECKED	

SHEET TITLE: EXIST. CONDITIONS

SHEET NUMBER: C003

MACKENZIE ROSE ESTATES - P.U.D.

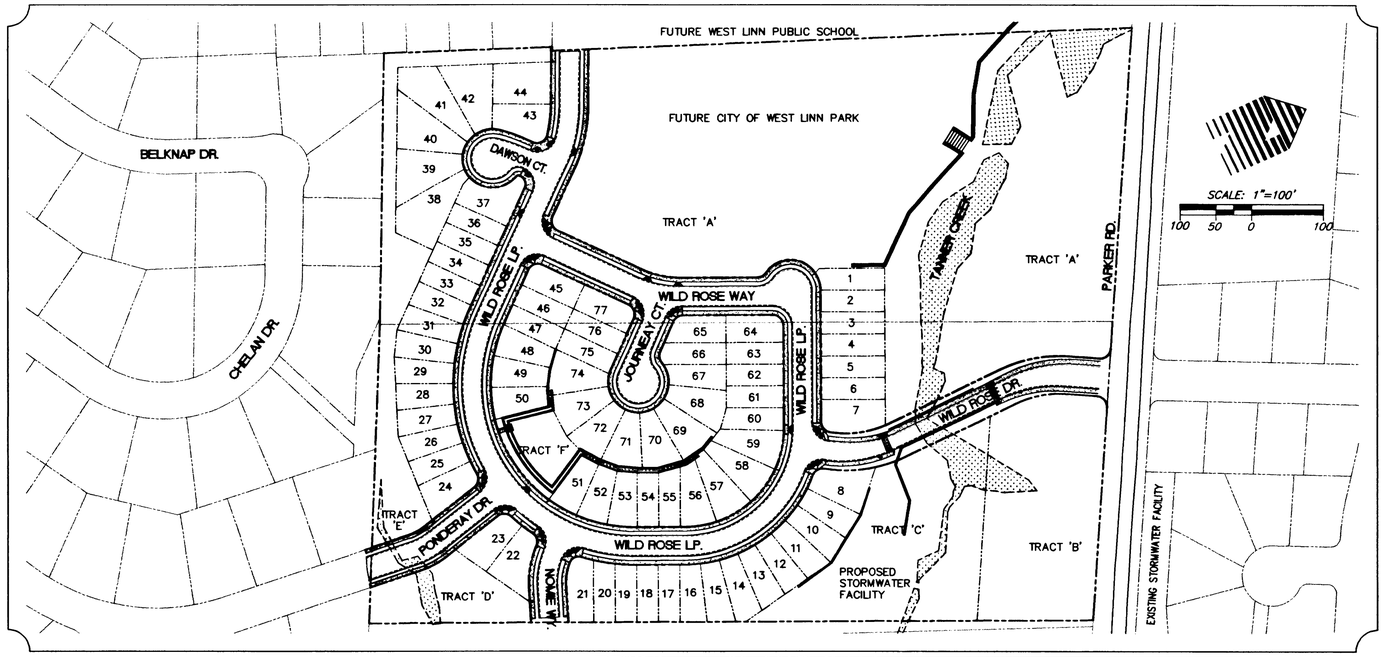

General Grading Notes

1. CONTRACTOR SHALL REMOVE ALL TREES (MARKED), SHRUBS, RUBBISH AND MAN-MADE STRUCTURES INCLUDING, BUT NOT LIMITED TO, CONCRETE SLABS, SPIGOTS, WALLS, FOOTINGS ASPHALTIC PAVED SURFACES GRAVELED AREAS, SHEDS OR OTHER FREE-STANDING BUILDINGS CONSTRUCTED OF WOOD, CONCRETE, METAL, ETC., BUILDING FOUNDATIONS, FENCES, RAILING, MACHINERY, ETC. FROM THE ENTIRE SITE. THE ITEMS LISTED ABOVE SHALL BE DISPOSED OF OFF-SITE. IT SHALL BE THE CONTRACTORS RESPONSIBILITY TO VISIT THE SITE AND CONFIRM THE NUMBER OF ITEMS TO BE REMOVED.
2. ALL BURIED STRUCTURES (I.E. LEACH LINES, DRAIN TILE, PIPES, SEPTIC TANKS) NOT DESIGNATED TO REMAIN ON THE SITE, SHALL BE REMOVED AND THE RESULTING EXCAVATIONS SHALL BE PROPERLY BACKFILLED AND COMPACTED PRIOR TO ANY GRADING OR FILLING OPERATIONS. THIS IS TO INCLUDE STUMPS AND ROOTBALLS OF TREES TO BE REMOVED FROM THE SITE.
3. ALL UNSUITABLE MATERIAL (SOIL & VEGETATION) REMOVED DURING THE CLEARING AND GRUBBING OPERATIONS SHALL BE REMOVED BY THE CONTRACTOR AND DISPOSED OF OFF-SITE IN A SUITABLE LOCATION APPROVED BY THE ENGINEER.
4. EXCAVATIONS MUST COMPLY WITH ALL PROVISIONS OF ORS 757.541 TO 757.571 BY CONTACTING THE OREGON UTILITY NOTIFICATION CENTER AT LEAST 2 BUSINESS DAYS, BUT NOT MORE THAN 10 BUSINESS DAYS, BEFORE COMMENCING EXCAVATION. ON CALL NUMBER IS 246-6699. EXCEPTIONS APPLY, SEE ORS FOR EXACT DETAILS.
5. ALL EXCESS MATERIAL (SUITABLE OR UNSUITABLE) NOT UTILIZED ON-SITE SHALL BE REMOVED BY THE CONTRACTOR AT THE CONTRACTORS EXPENSE.
6. EXISTING TREES 10' BEYOND DRIPLINE AND TREES NOT REMOVED SHALL BE PROTECTED AT ALL TIMES. A TREE CUTTING PERMIT MUST BE OBTAINED FROM THE CITY OF WEST LINN PRIOR TO THE REMOVAL OF ANY TREES.
7. THE CONTRACTOR SHALL MAKE EVERY REASONABLE EFFORT TO PERFORM WORK WITHIN THE DESIGNATED WORK LIMITS. EXISTING TREES AND OR LANDSCAPING OUTSIDE THE PROTECT LIMITS DISTURBED OR REMOVED DURING CONSTRUCTION SHALL BE REPAIRED OR REPLACED IN-KIND. CONTRACTOR SHALL COORDINATE WITH INDIVIDUAL PROPERTY OWNERS. THE CONTRACTOR SHALL PROVIDE COPIES OF RELEASE & WAIVER DOCUMENTS TO THE CITY, FROM ALL IMPACTED OWNERSHIPS PRIOR TO THE CITY CONDITIONAL ACCEPTANCE OF PROJECT WORK.
8. OWNER/ENGINEER SHALL REVIEW TESTING FOR ALL FILL PLACED IN EXCESS OF 1 FOOT IN DEPTH OUTSIDE THE R.O.W. ONLY. CONTRACTOR SHALL BE BE RESPONSIBLE FOR REQUESTING TESTING EVERYWHERE AS REQUIRED.
9. NO TOP-SOIL/STRIPPING MATERIAL SHALL BE PLACED ON THE PROPOSED LOT OR STREET AREAS. ALL STRIPPINGS THAT ARE FREE OF DEBRIS MAY BE SPREAD ON THE FUTURE PARK SITE TO A MAXIMUM DEPTH OF 12", OR REMOVED FROM THE SITE. CONTRACTOR SHALL COORDINATE WITH THE CITY OF WEST LINN PARKS DEPARTMENT. ALL STRIPPING MATERIAL THAT IS PLACED ON THE FUTURE PARK SITE SHALL FIRST BE APPROVED BY THE CITY OF WEST LINN PARKS AND RECREATION DEPARTMENT.

Index of Grading Sheets

GRADING AND EROSION CONTROL CONSTRUCTION PLANS

C004	Grading and Erosion Control Cover Sheet
C005	Grading and Erosion Control Plan
C006	Grading and Erosion Control Details & Notes
C007	Retaining Wall Profiles and Details
C008	Retaining Wall Profiles and Details
C009	Keystone Wall Stair Details
C010	Retaining Wall Details

Legend

EXISTING FEATURES LEGEND

- PROPERTY BOUNDARY LINE
- ROW LINE
- EXISTING ROW CENTERLINE
- EXISTING LOT LINE
- EXISTING CREEK FLOWLINE
- DRAINAGE TRANSITION ZONE
- EXISTING WETLAND BOUNDARY
- EXISTING FENCE
- G — EXISTING GAS LINE
- W — EXISTING WATER PIPE
- OHW — EXISTING OVERHEAD WIRE
- UPWR — EX UNDER GROUND POWER LINES
- UTEL — EX UNDER GROUND TELEPHONE CONDUIT
- SS — EXISTING SANITARY SEWER PIPE
- EXISTING STORM SEWER PIPE
- WV — EXISTING WATER VALVE
- EXISTING SANITARY MANHOLE (UNLESS NOTED OTHERWISE)
- EXISTING STORM MANHOLE
- EXISTING DRAINAGE INLET
- EXISTING ABOVE GROUND JUNCTION BOX
- EXISTING TELEPHONE PEDESTAL
- EXISTING GAS FINK
- EXISTING GAS METER
- EX CABLE TELEVISION RISER
- EXISTING FIRE HYDRANT
- EXISTING STREET LIGHT
- EXISTING DECIDUOUS TREE
- EXISTING CONIFEROUS TREE
- EXISTING SIGN
- EXISTING UTILITY POLE
- EXISTING GUY ANCHOR
- EXISTING MAIL BOX
- EXISTING WATER METER
- EXISTING GATE POST (UNLESS OTHERWISE NOTED)
- EXISTING A/C PAVEMENT
- EXISTING CONCRETE
- EXISTING GRAVEL

PROPOSED FEATURES LEGEND

- PROJECT BOUNDARY LINE
- PROPOSED ROW LINE
- PROPOSED ROW CENTERLINE
- PROPOSED LOT LINE
- PROPOSED BUILDING SETBACK
- 570 — PROPOSED 10' CONTOUR
- 572 — PROPOSED 2' CONTOUR
- PROPOSED SILT FENCE
- PROPOSED RETAINING WALL
- EXISTING DECIDUOUS TREE TO BE REMOVED
- EXISTING CONIFEROUS TREE TO BE REMOVED
- PROPOSED INLET BIO-BAG PROTECTION
- PROPOSED HAY BALE DITCH/CREEK PROTECTION

WRG DESIGN
5415 S.W. Westgate Dr., Suite 100
Portland, Oregon 97221
☎ 503 | 419-2500 FAX: 503 | 419-2600
PLANNERS ▪ ENGINEERS ▪ LANDSCAPE ARCHITECTS ▪ SURVEYORS

REGISTERED PROFESSIONAL ENGINEER 19,172 OREGON JULY 15, 1997 RANDALL S. DYER
EXPIRES: 12/31/03

GRADING + EROSION CONTROL COVER SHEET
MACKENZIE ROSE ESTATES - P.U.D.
WEST LINN, OREGON

J.T. SMITH COMPANIES
REAL ESTATE DEVELOPMENT
22400 SALAMO ROAD, SUITE 204
WEST LINN, OREGON 97068

RECORD DRAWING
11/26/2001
THESE RECORD DRAWINGS HAVE BEEN PREPARED, IN PART, ON THE BASIS OF INFORMATION COMPILED AND FURNISHED BY THE CONTRACTOR, REVISED CONSTRUCTION PLANS, AND FIELD OBSERVATIONS DURING CONSTRUCTION.

PROJECT NO. JTS007
DATE 01/25/01
DRAFTED D. LAVOIE
DESIGNED J NEMEC
ENGINEER R. DYER
CHECKED

SHEET TITLE GRADING/EROSION
SHEET NUMBER C004

GENERAL GRADING and E.C. CONSTRUCTION NOTES:

1. INSTALL SILT FENCE PER DETAIL ON SHEET C006.
2. INSTALL BIO-BAG INLET PROTECTION PER DETAIL ON SHEET C006 (TO BE INSTALLED WITH ON-SITE CONSTRUCTION)
3. INSTALL BIO-BAG DITCH/CREEK PROTECTION @ 20' O.C. PER DETAIL ON SHEET C006. HAY BALES ARE NOT ALLOWED
4. INSTALL GRAVEL CONSTRUCTION ENTRANCE PER DETAIL ON SHEET C006
5. COORDINATE TO REMOVE EXISTING STRUCTURE/BUILDING
6. REMOVE EXISTING FENCE
7. COORDINATE TO REMOVE EXISTING POWER/UTILITY POLE AND ASSOCIATED UTILITIES
8. REMOVE EXISTING GRAVEL/AC DRIVEWAY
10. INSTALL CHAIN LINK FENCE AROUND PERIMETER OF TREE PROTECTION EASEMENT, AT LEAST 10 FEET BEYOND DRIPLINE
11. KEYSTONE RETAINING WALL # 3, SEE SHEET C007 FOR DETAILS
12. KEYSTONE RETAINING WALL # 4, SEE SHEET C007 FOR DETAILS
13. CONSTRUCT DRAINAGE RELIEF DITCH, 1' DEEP, 2:1 SIDES WITH MINIMUM LONGITUDINAL SLOPE OF 1%
14. CONSTRUCT 4' HIGH CEDAR FENCE ON SIDE/REAR LOT LINES, OF LOTS 24-34 & LOTS 38-44, ADJACENT TO TRACT E.
15. CONSTRUCT 4' HIGH CEDAR FENCE ALONG SOUTH/WEST PROJECT BOUNDARY LINE.

WRG DESIGN INC
5415 S.W. Westgate Dr., Suite 100
Portland, Oregon 97221
☎ 503 | 419-2500 FAX: 503 | 419-2600
PLANNERS • ENGINEERS • LANDSCAPE ARCHITECTS • SURVEYORS

REGISTERED PROFESSIONAL ENGINEER 19,172 OREGON JULY 15, 1997 RANDALL S. DYER
EXPIRES: 12/31/03

GRADING + EROSION CONTROL PLAN
MACKENZIE ROSE ESTATES - P.U.D.
WEST LINN, OREGON

J.T. SMITH COMPANIES
REAL ESTATE DEVELOPMENT
12400 SALMON ROAD, SUITE 104
WEST LINN, OREGON 97068

RECORD DRAWING
11/26/2001
THESE RECORD DRAWINGS HAVE BEEN PREPARED, IN PART, ON THE BASIS OF INFORMATION COMPILED AND FURNISHED BY THE CONTRACTOR, REVISED CONSTRUCTION PLANS, AND FIELD OBSERVATIONS DURING CONSTRUCTION.

PROJECT NO. JTS007

DATE	01/25/01
DRAFTED	D. LAVOIE
DESIGNED	J NEMEC
ENGINEER	R. DYER
CHECKED	

SHEET TITLE
GRADING & EROSION CONTROL
SHEET NUMBER
C005

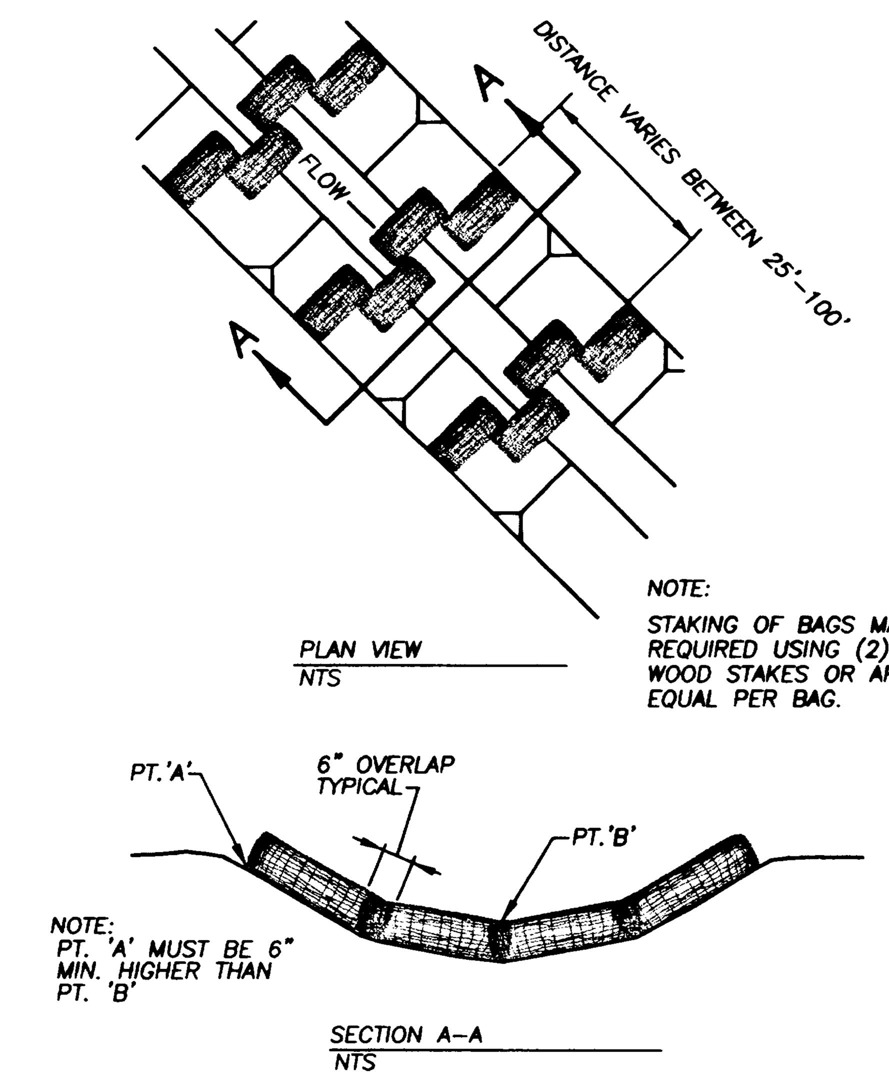

BIOFILTER BAG DITCHES & SWALES

NTS

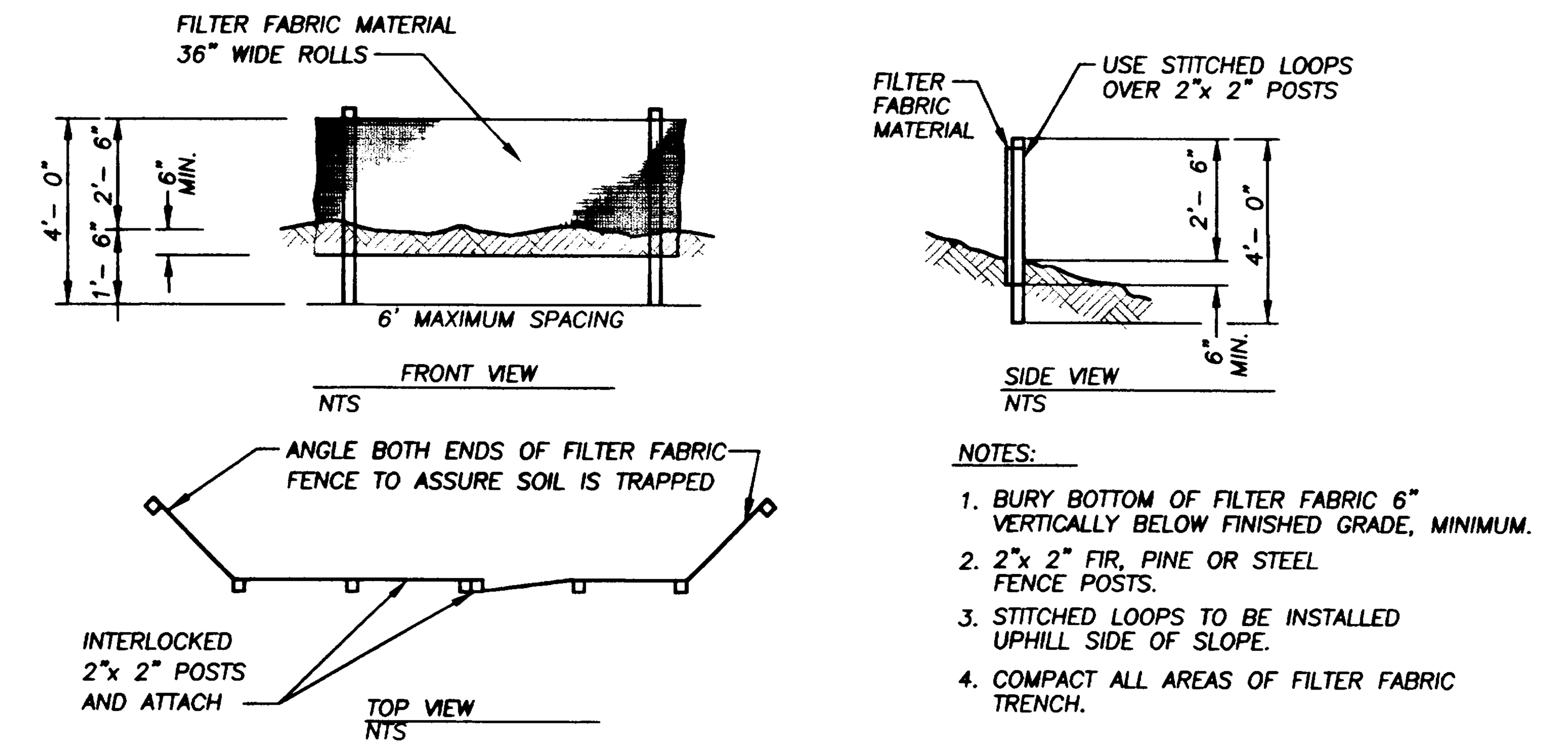

SEDIMENT FENCE

NTS

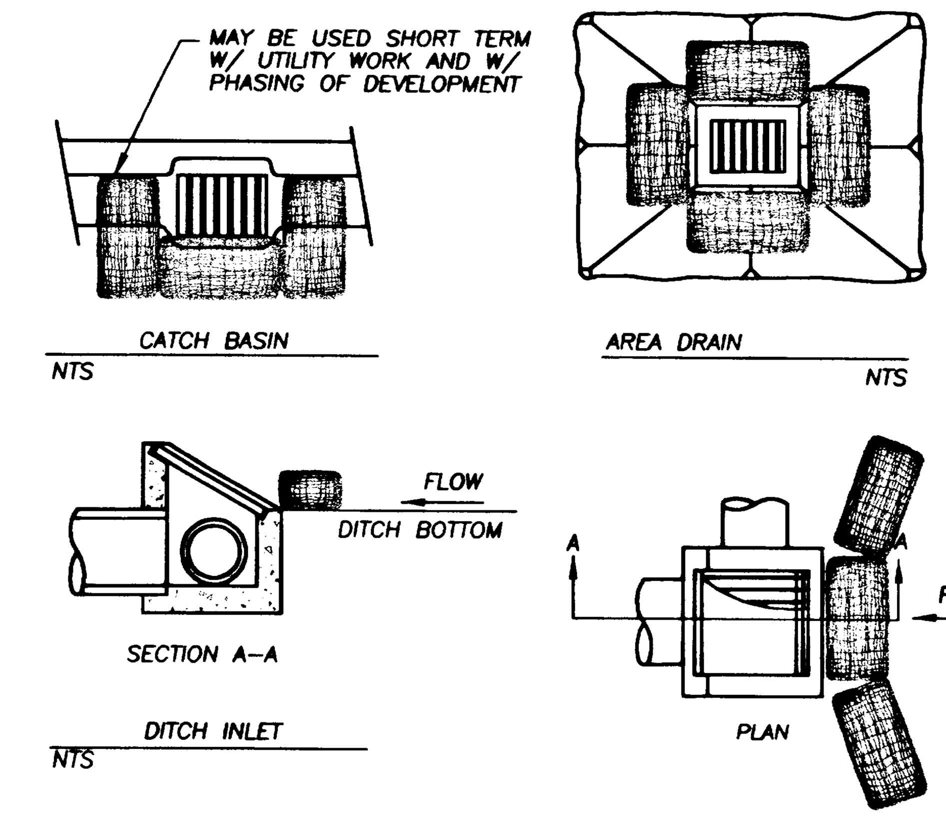

BIO–BAG INLET PROTECTION

NTS

EROSION CONTROL NOTES:

1. CONTRACTOR SHALL REMAIN WITHIN WORK AREA AS SHOWN ON PLAN. CONTRACTOR SHALL NOT DISTURB VEGETATION OUTSIDE DESIGNATED WORK AREA. NECESSARY STAGING SHALL BE DONE WITHIN WORK AREA. CONTRACTOR MUST NOTIFY CITY OF WEST LINN, 24 HOURS PRIOR TO BEGINNING CONSTRUCTION.
2. THE FOLLOWING EROSION CONTROL MEASURES SHALL BE TAKEN:
   - A. SEDIMENT FENCES AND GRAVEL ENTRANCE SHALL BE INSTALLED PRIOR TO ANY FIELD CONSTRUCTION, EXCEPT AS INDICATED ON THE PLANS, IN LOCATIONS SHOWN ON PLANS.
   - B. SEDIMENT FENCE SHALL BE WOVEN GEOTEXTILE FABRIC, AND SHALL BE STAKED IN PLACE, ANCHORED ALONG THE BOTTOM OF THE FABRIC. 6" EMBEDMENT, PER STANDARD DETAIL. SEDIMENT FENCE SHALL BE CONTINUOUS WITHOUT GAPS IN THE AREAS SHOWN.
   - C. SEDIMENT FENCES SHALL BE MAINTAINED DURING THE PERIOD OF CONSTRUCTION AND FINAL ACCEPTANCE OF THE PROJECT BY THE CITY OF WEST LINN.
   - D. ALL DISTURBED AREAS SHALL BE SEEDED IMMEDIATELY UPON COMPLETION OF CONSTRUCTION. ALL DISTURBED AREAS STEEPER THAN 15% SHALL BE MULCHED WITH 3 INCH THICKNESS OF STRAW MULCH AFTER SEEDING.
   - E. CONTRACTOR SHALL BE RESPONSIBLE TO RESEED AND REPAIR ANY ERODED AREAS (GREATER THAN 1 C.Y.) WITHIN WORK AREA UNTIL FINAL ACCEPTANCE OF THE PROJECT BY THE CITY OF WEST LINN.
   - F. BIO–BAGS IN DRAINAGE CHANNEL SHALL BE HAND–PLACED AND STAKED IN PLACE, PER STANDARD DETAIL. BIO–BAGS SHALL BE REPLACED WHEN EXCESSIVELY LOADED WITH SEDIMENT AND NO LONGER FUNCTIONAL OR EVERY 3 MONTHS. HAY BALES WILL NOT BE ALLOWED.
   - G. GRAVEL CONSTRUCTION ENTRANCE SHALL BE CONSTRUCTED AT LOCATION OF PROPOSED STREET ACCESS ON PARKER ROAD. ALL CONSTRUCTION VEHICLES LEAVING SITE SHALL LEAVE BY DRIVING ACROSS THIS GRAVEL ENTRANCE. IF GRAVEL ENTRANCE BECOMES FILLED WITH MUD AND IS NO LONGER FUNCTIONAL, ADDITIONAL GRAVEL SHALL BE PLACED.
   - H. CONTRACTOR SHALL PROVIDE ANY ADDITIONAL EROSION CONTROL MEASURES AS MAY BE REQUIRED TO MEET CITY OF WEST LINN STANDARDS AND AS NECESSARY TO PREVENT SEDIMENT REMOVAL FROM SITE TO THE EXTENT PRACTICAL.
   - I. STORM DRAIN INLET PROTECTION BARRIER SHALL BE PROVIDED AND MAINTAINED FOR ALL INLETS AS SOON AS THEY ARE INSTALLED. FOR INLETS LOCATED WITHIN STREETS, PROVIDE PROTECTION AFTER FIRST LIFT OF A.C. HAS BEEN PLACED.
   - J. CONTRACTOR SHALL COMPLY WITH ALL REQUIREMENTS OF THE CURRENT EDITION OF CLACKAMAS COUNTY'S "EROSION CONTROL PLANS AND TECHNICAL GUIDANCE HANDBOOK", MOST RECENT EDITION.
   - K. SEDIMENT FENCING SHALL BE ORIENTED PRIMARILY ALONG LINES CONTOURING THE SLOPE. SHORT SPURS OF FENCING WILL BE USED WHERE NECESSARY. AT THE BASE OF ALL FILL SLOPES – SILT FENCE SHALL BE IN PLACE BEFORE PLACEMENT OF ANY FILL. SEDIMENT FENCES SHALL BE REMOVED WHEN THEY HAVE SERVED THEIR USEFUL LIFE, BUT NOT BEFORE THE UPSLOPE AREA HAS BEEN SEEDED AND MULCHED.
3. ANY EXCAVATION SPOILS, IN EXCESS OF FILL REQUIREMENTS SHOWN ON THE PLANS, SHALL NOT BE PLACED ON THE SITE, EXCEPT AS SHOWN. SUCH EXCESS SPOILS, WHICH ARE NOT SUITABLE FOR FILL, SHALL BE HAULED TO AN OFF–SITE LOCATION AT NO ADDITIONAL COST TO THE OWNER.
4. THE IMPLEMENTATION OF THESE ESC PLANS AND THE CONSTRUCTION, MAINTENANCE, REPLACEMENTS, AND UPGRADING OF THESE ESC FACILITIES IS THE RESPONSIBILITY OF THE CONTRACTOR UNTIL ALL CONSTRUCTION IS COMPLETED AND ACCEPTED BY THE CITY OF WEST LINN. OWNER IS RESPONSIBLE FOR ALL SUCH ESC MAINTENANCE AFTER FINAL ACCEPTANCE BY WEST LINN UNTIL VEGETATION IS ESTABLISHED OR UNTIL SALE OF LOTS BY OTHERS.
5. THE BOUNDARIES OF THE WORK LIMITS SHOWN ON THIS PLAN SHALL BE CLEARLY FLAGGED IN THE FIELD PRIOR TO CONSTRUCTION. DURING THE CONSTRUCTION PERIOD, NO DISTURBANCE BEYOND THE FLAGGED CLEARING LIMITS SHALL BE PERMITTED. THE FLAGGING SHALL BE MAINTAINED BY THE CONTRACTOR FOR THE DURATION OF CONSTRUCTION.
6. THE ESC FACILITIES SHOWN ON THIS PLAN MUST BE CONSTRUCTED IN CONJUNCTION WITH ALL CLEARING AND GRADING ACTIVITIES, AND IN SUCH A MANNER AS TO INSURE THAT SEDIMENT AND SEDIMENT LADEN WATER DO NOT ENTER THE DRAINAGE SYSTEM, ROADWAYS, OR VIOLATE APPLICABLE WATER STANDARDS.
7. THE ESC FACILITIES SHOWN ON THIS PLAN ARE THE MINIMUM REQUIREMENTS FOR ANTICIPATED SITE CONDITIONS. DURING THE CONSTRUCTION PERIOD, THE CONTRACTOR SHALL UPGRADE THESE FACILITIES AS NEEDED, AND TO ENSURE THAT SEDIMENT AND SEDIMENT–LADEN WATER ARE MINIMAL TO THE EXTENT POSSIBLE.
8. THE ESC FACILITIES SHALL BE INSPECTED DAILY BY THE CONTRACTOR AND MAINTAINED AS NECESSARY TO ENSURE THEIR CONTINUED FUNCTIONING.
9. THE ESC FACILITIES SHALL BE INSPECTED IMMEDIATELY FOLLOWING A STORM EVENT DURING CONSTRUCTION, AND SHALL BE INSPECTED A MINIMUM OF ONCE A MONTH BY THE OWNER FOLLOWING FINAL ACCEPTANCE BY THE CITY OF WEST LINN.
10. AT NO TIME SHALL MORE THAN ONE FOOT OF SEDIMENT BE ALLOWED TO ACCUMULATE WITHIN A TRAPPED CATCH BASIN. ALL CATCH BASINS AND CONVEYANCE LINES SHALL BE CLEANED PRIOR TO PAVING. THE CLEANING OPERATION SHALL NOT FLUSH SEDIMENT LADEN WATER INTO THE DOWNSTREAM SYSTEM.
11. A STABILIZED CONSTRUCTION ENTRANCE SHALL BE INSTALLED AT THE BEGINNING OF CONSTRUCTION AND MAINTAINED FOR THE DURATION OF THE PROJECT. ADDITIONAL MEASURES MAY BE REQUIRED TO INSURE THAT ALL PAVED AREAS ARE KEPT CLEAN FOR THE DURATION OF THE PROJECT.
12. AREAS DESIGNATED TO BE FILLED SHALL BE STRIPPED OF VEGETATION AND ORGANIC MATERIAL PRIOR TO FILL PLACEMENT. SEE GEOTECHNICAL REPORT FOR DEPTH.
13. ALL RESIDENTIAL SITE CONSTRUCTION AND EASEMENT WORK PERFORMED IN OR NEAR THE PROPOSED OPEN SPACE, OR CONSERVATION EASEMENT AREA BOUNDARIES SHALL NOT IMPOSE ANY PERMANENT NEGATIVE EFFECTS TO THE DESCRIBED AREAS. ALL CONSTRUCTION DEBRIS, SURPLUS GRADING MATERIAL, CUT OR FALLEN LIMBS, STUMPS, SNAGS, OR CLIPPINGS, OR OTHER DELETERIOUS OR FOREIGN MATERIAL, SHALL BE REMOVED AND SHALL NOT BE PUSHED INTO THE OPEN AREAS.
14. RIGHT OF WAY AREAS BEHIND BACK OF CURB SHALL BE ROUGH GRADED FOR SIDEWALK AT A SLOPE OF 2%. CUT SLOPES FROM STREET RIGHT–OF–WAY TO BACK EDGE OF PUBLIC UTILITY EASEMENT 5' BEHIND EDGE OF RIGHT OF WAY, (5'PUE) SHALL BE GRADED AT A MAXIMUM SLOPE OF 5H:1V. SLOPES FROM BACK EDGE OF 5'PUE ONTO LOTS SHALL NOT EXCEED 3H:1V. FOR STREET CROSS SECTIONS SEE SHEET C002.
15. FINAL GRADES SHOWN ON PLANS TO DIRECT SURFACE DRAINAGE TO STREET OR APPROVED STORM DRAINAGE SYSTEM.
16. ALL CATCH BASINS, MANHOLES AND CONVEYANCE LINES SHALL BE CLEANED PRIOR TO PAVING. THE CLEANING OPERATION SHALL NOT FLUSH SEDIMENT–LADEN WATER INTO THE DOWNSTREAM SYSTEM.
17. ANY IN–STREAM WORK SHALL BE SCHEDULED IN STRICT ACCORDANCE WITH SPECIFIC LOCAL REQUIREMENTS OF THE DIVISON OF STATE LANDS, AND OREGON DEPARTMENT OF FISH AND WILDLIFE.
18. BY SEPTEMBER 1st ALL BARE SOIL SHALL BE RE–SEEDED, COVERED WITH AN APPROPRIATE EROSION CONTROL BLANKET, AND FERTILIZED. WHERE RAPID GERMINATION IS REQUIRED USE ANNUAL RYEGRASS BLEND AS RECOMMENDED IN THE "TECHNICAL GUIDANCE HANDBOOK". WET WEATHER MEASURES WILL BE IN EFFECT IF SOILS ARE NOT FULLY ESTABLISHED FROM NOVEMBER 1st TO JUNE 30th.
19. THE CONTRACTOR SHALL BE RESPONSIBLE FOR CLEANING AND MAINTAINING ALL IMPACTED EXISTING STORM FACILITIES, FOR THE DURATION OF CONSTRUCTION AND FINAL ACCEPTANCE BY THE CITY OF WEST LINN.

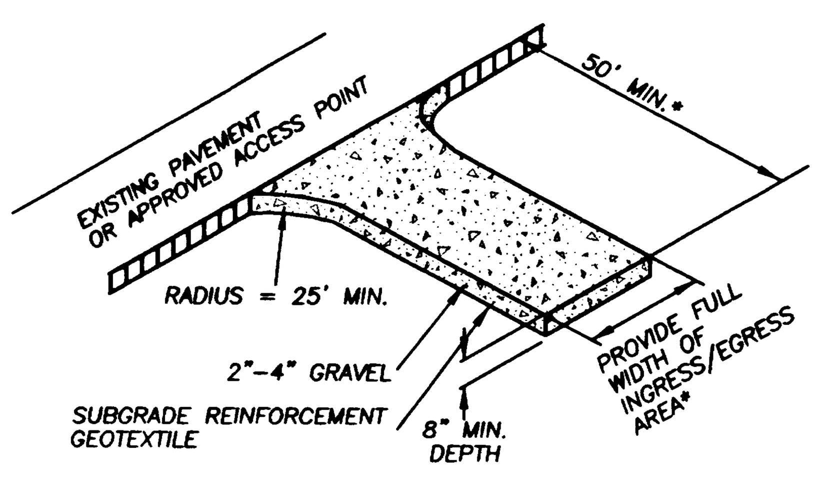

*20' MIN. FOR SINGLE FAMILY AND DUPLEX RESIDENTIAL

GRAVEL CONSTRUCTION ENTRANCE

NTS

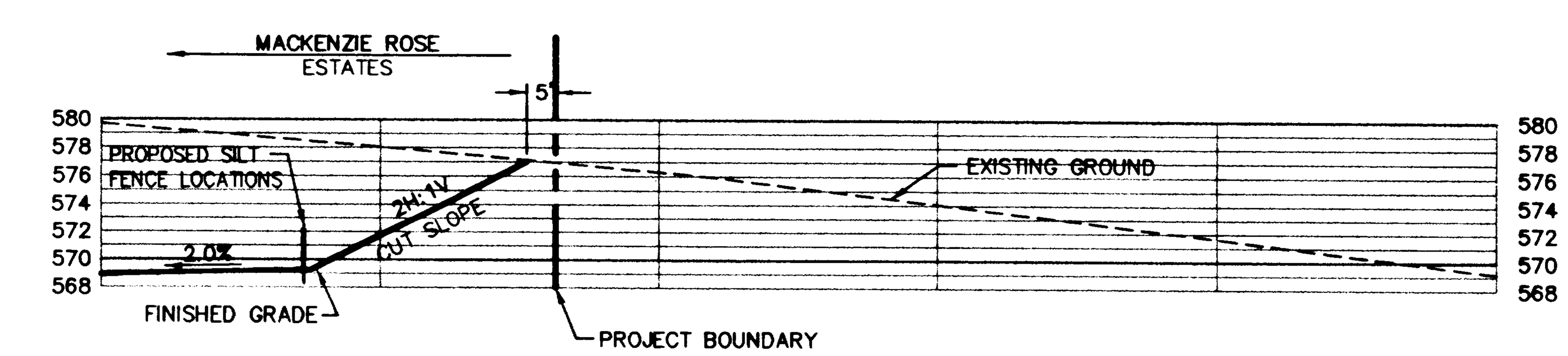

EAST PROPERTY LINE GRADING CROSS SECTION "A–A"

SCALE: 1"=10'

W R G DESIGN INC.
5415 S.W. Westgate Dr., Suite 100
Portland, Oregon 97221
503|419–2500 FAX: 503|419–2600
PLANNERS ■ ENGINEERS ■ LANDSCAPE ARCHITECTS ■ SURVEYORS

REGISTERED PROFESSIONAL ENGINEER 19,172 OREGON JULY 15, 1997 RANDALL S. DYER
EXPIRES: 12/31/03

GRADING/EROSION CONTROL DETAILS/NOTES
MACKENZIE ROSE ESTATES - P.U.D.
WEST LINN, OREGON

J.T. SMITH COMPANIES
REAL ESTATE DEVELOPMENT
22400 SALAMO ROAD, SUITE 204
WEST LINN, OREGON 97068

RECORD DRAWING
11/26/2001
THESE RECORD DRAWINGS HAVE BEEN PREPARED, IN PART, ON THE BASIS OF INFORMATION COMPILED AND FURNISHED BY THE CONTRACTOR, REVISED CONSTRUCTION PLANS, AND FIELD OBSERVATIONS DURING CONSTRUCTION.

PROJECT NO.
JTS007

DATE	01/25/01
DRAFTED	D. LAVOIE
DESIGNED	J NEMEC
ENGINEER	R. DYER
CHECKED	

SHEET TITLE
GRADING/EROSION
SHEET NUMBER
C006

ULTRABLOCK RETAINING WALL # 1

SCALE: 1"=20' HORZ.
1"=10' VERT.

NOTE: ALL STATIONS ARE REFERENCED FROM TOP/FACE OF WALL.

NOTE: ALL TOP BLOCKS SHALL BE FLAT TOPS.

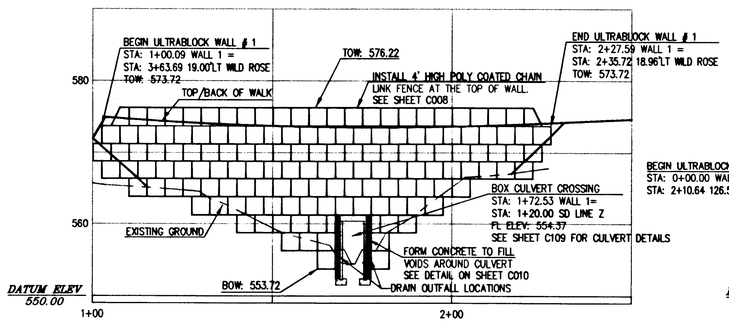

ULTRABLOCK RETAINING WALL # 2

SCALE: 1"=20' HORZ.
1"=10' VERT.

NOTE: ALL STATIONS ARE REFERENCED FROM TOP/FACE OF WALL.

NOTE: ALL TOP BLOCKS SHALL BE FLAT TOPS.

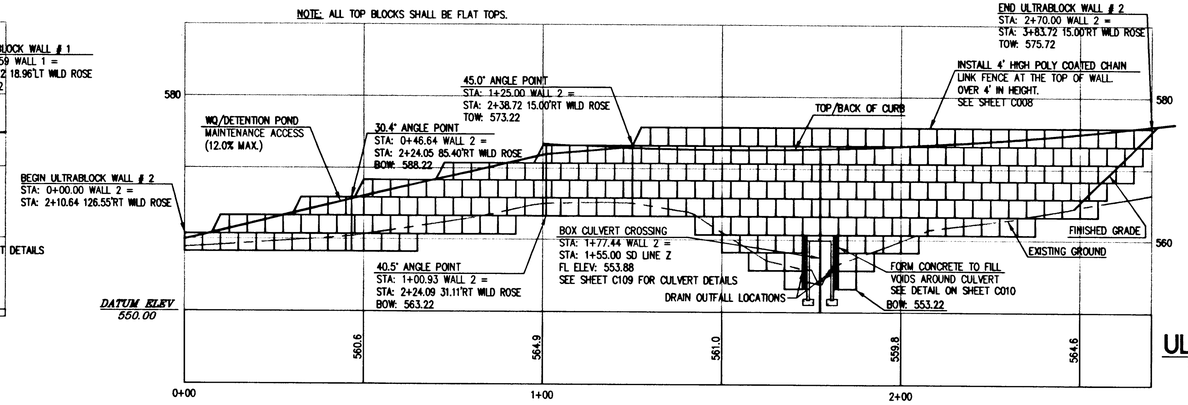

GENERAL ULTRABLOCK NOTES:

SIZE: 29.5"(H) x 29.5"(D) x 59"(L), (750mm x 750mm x 1500mm) APPROXIMATELY 2.5'x2.5'x5'.

WEIGHT: 4320 lbs. (1960 kg)

LIFTING PROVISION: A STANDARD 7 STRAND STEEL LOOP PRE-CAST INTO THE CENTER OF EACH BLOCK.

ADDITIONAL BLOCK TYPES ARE AVAILIBLE SUCH AS: HALF WIDTH, HALF HEIGHT, FLAT TOP, AND ANGLED TRANSITION BLOCKS.

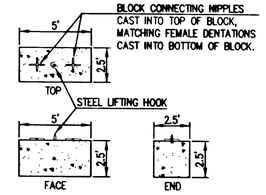

ULTRABLOCK DIMINSIONS

SCALE: 1"=5'

KEYSTONE RETAINING WALL # 3

SCALE: 1"=20' HORZ.
1"=10' VERT.

NOTE: ALL STATIONS ARE GIVEN AT TOE/FACE

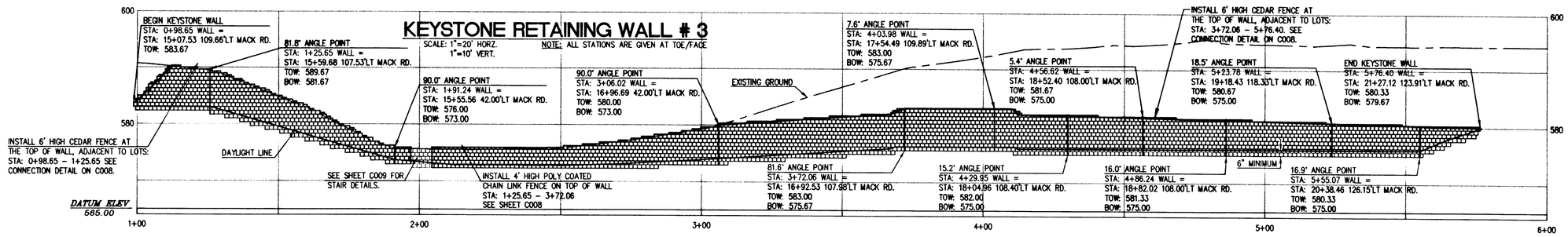

KEYSTONE RETAINING WALL # 4

SCALE: 1"=20' HORZ.
1"=10' VERT.

NOTE: ALL STATIONS ARE GIVEN AT TOE/FACE

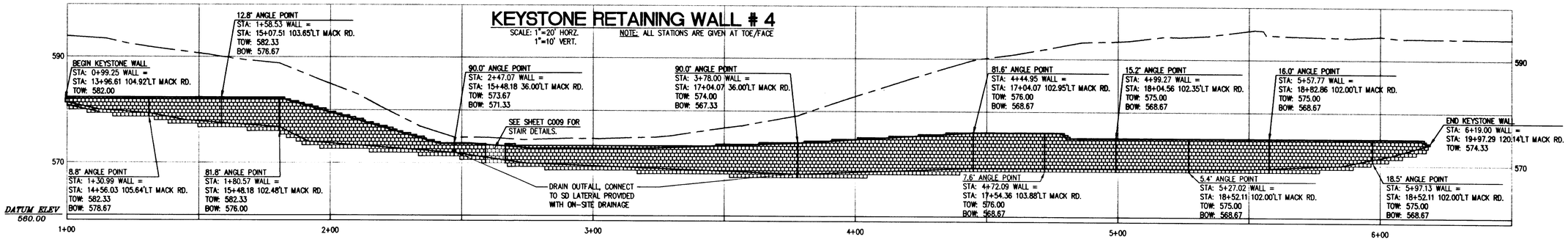

BOULDER RETAINING WALL # 6

SCALE: 1"=20' HORZ.
1"=10' VERT.

NOTE: ALL STATIONS ARE GIVEN AT TOE/FACE

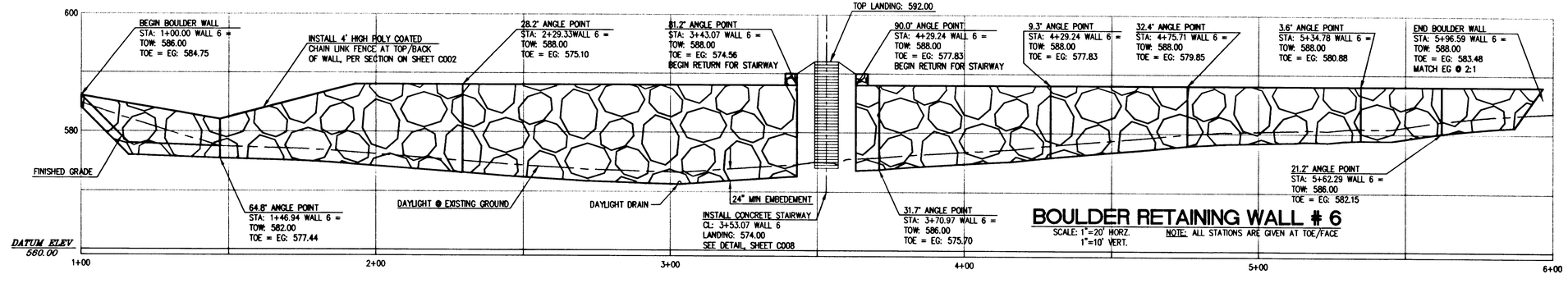

NOTE: SEE SHEET C002 FOR ALL WALL TYPICAL SECTIONS

WRG DESIGN
5415 S.W. Westgate Dr., Suite 100
Portland, Oregon 97221
503 | 419-2500
FAX: 503 | 419-2600
PLANNERS • ENGINEERS • LANDSCAPE ARCHITECTS • SURVEYORS

REGISTERED PROFESSIONAL ENGINEER 19,172 OREGON JULY 15, 1997 RANDALL S. DYER
EXPIRES: 12/31/03

RETAINING WALL PROFILES
MACKENZIE ROSE ESTATES - P.U.D.
WEST LINN, OREGON

J.T. SMITH COMPANIES
REAL ESTATE DEVELOPMENT
22420 SALAMO ROAD, SUITE 204
WEST LINN, OREGON 97068

RECORD DRAWING
11/26/2001
THESE RECORD DRAWINGS HAVE BEEN PREPARED, IN PART, ON THE BASIS OF INFORMATION COMPILED AND FURNISHED BY THE CONTRACTOR, REVISED CONSTRUCTION PLANS, AND FIELD OBSERVATIONS DURING CONSTRUCTION.

PROJECT NO. JTS007
DATE 01/25/01
DRAFTED D. LAVOIE
DESIGNED J NEMEC
ENGINEER R. DYER
CHECKED

SHEET TITLE
WALL PROFILES

SHEET NUMBER
C007

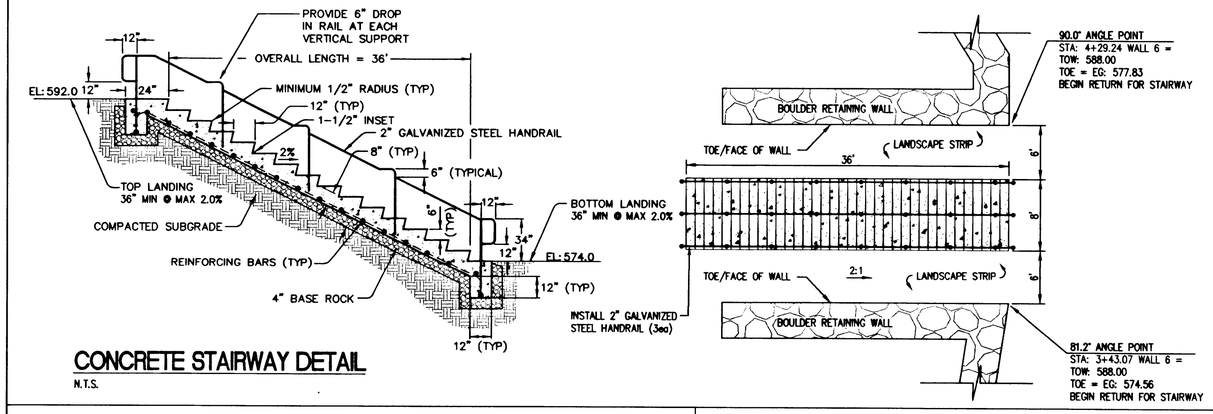

CONCRETE STAIRWAY DETAIL

N.T.S.

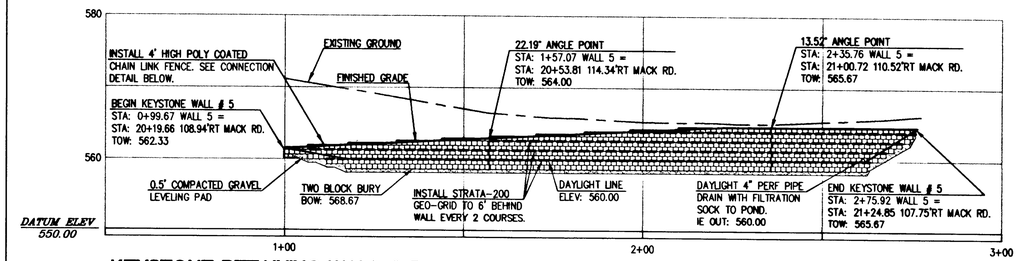

KEYSTONE RETAINING WALL # 5

SCALE: 1"=20' HORZ. 1"=10' VERT.

NOTE: ALL STATIONS ARE GIVEN AT TOE/FACE. ALL TOP BLOCKS SHALL BE FLAT TOPS.

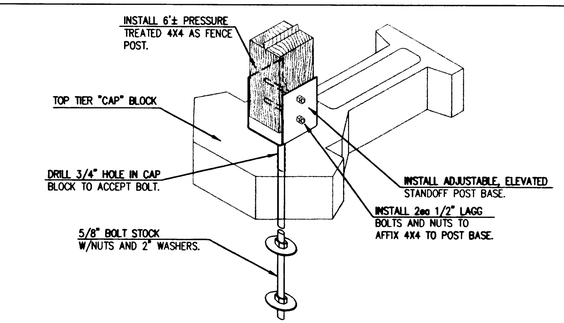

ORTHOGRAPHIC VIEW

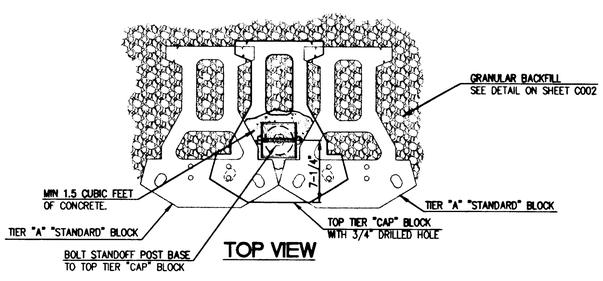

TOP VIEW

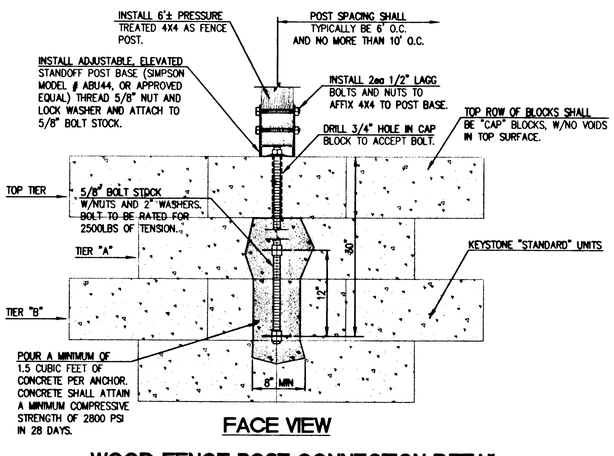

FACE VIEW

WOOD FENCE POST CONNECTION DETAIL FOR KEYSTONE WALL

N.T.S.

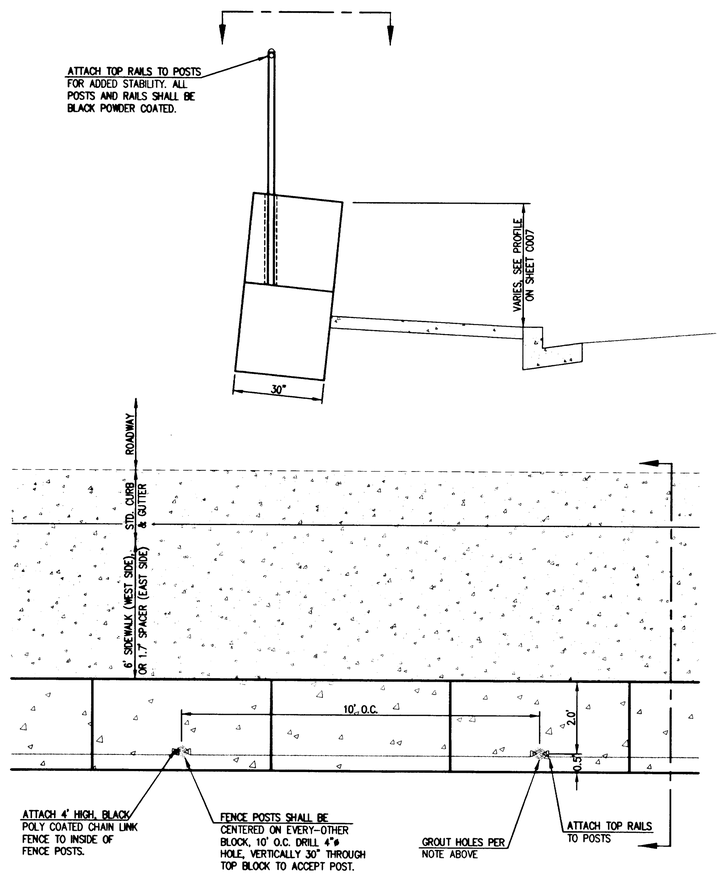

CHAIN LINK FENCE POST CONNECTION DETAIL FOR ULTRABLOCK WALL

N.T.S.

48" HIGH SAFETY FENCE NOTE:

48" HIGH CHAIN LINK FENCE SHALL BE CONSTRUCTED PER AASHTO M181. FABRIC SHALL BE 2" MESH, 11 GA., BLACK VINYL COATED. POSTS SHALL BE 2" ALUMINUM, EMBEDDED THE ENTIRE 30" DEPTH OF THE TOP BLOCK, SPACED 10' APART. 4" DIAMETER HOLES SHALL BE DRILLED IN THE TOP BLOCK TO RECEIVE THE POSTS AND BACKFILLED WITH GROUT. A 1 1/4" ALUMINUM TOP RAIL SHALL BE INSTALLED BETWEEN EACH POST. ALL BARS AND POSTS TO BE BLACK POWDER COATED. MESH SHALL HAVE A BLACK VINYL COATING. SEE WALL CONNECTION DETAIL ABOVE.

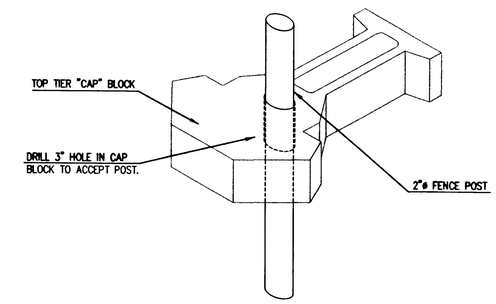

ORTHOGRAPHIC VIEW

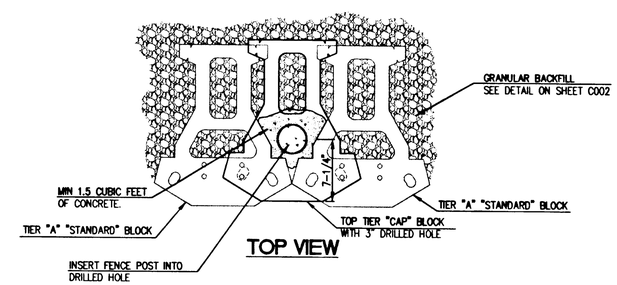

TOP VIEW

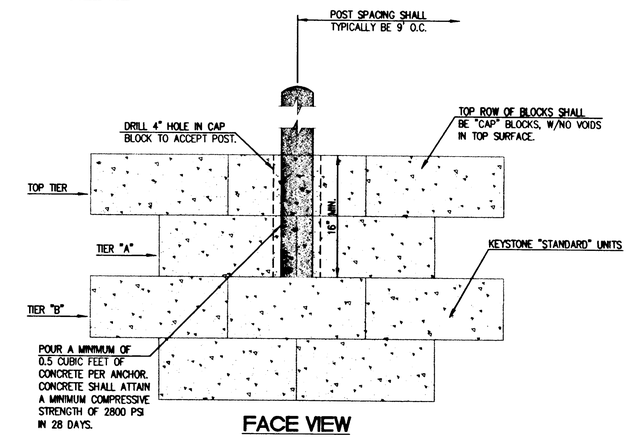

FACE VIEW

CHAIN LINK FENCE POST CONNECTION DETAIL FOR KEYSTONE WALL

N.T.S.

W R G DESIGN INC
5415 S.W. Westgate Dr., Suite 100
Portland, Oregon 97221
☎ 503 | 419-2600 FAX: 503 | 419-2600
PLANNERS • ENGINEERS • LANDSCAPE ARCHITECTS • SURVEYORS

REGISTERED PROFESSIONAL ENGINEER 19,172 OREGON JULY 15, 1997 RANDALL S. DYER
EXPIRES: 12/31/03

RETAINING WALL PROFILES
MACKENZIE ROSE ESTATES - P.U.D.
WEST LINN, OREGON

J.T. SMITH COMPANIES
REAL ESTATE DEVELOPMENT
22400 SALAMO ROAD, SUITE 204
WEST LINN, OREGON 97068

RECORD DRAWING
11/26/2001

THESE RECORD DRAWINGS HAVE BEEN PREPARED, IN PART, ON THE BASIS OF INFORMATION COMPILED AND FURNISHED BY THE CONTRACTOR, REVISED CONSTRUCTION PLANS, AND FIELD OBSERVATIONS DURING CONSTRUCTION.

PROJECT NO. JTS007

DATE	01/25/01
DRAFTED	D. LAVOIE
DESIGNED	J NEMEC
ENGINEER	R. DYER
CHECKED	

SHEET TITLE: WALL PROFILES

SHEET NUMBER: C008

COURSE # 1
SCALE: 1"=5'
BOTTOM OF WALL 4 BLOCK: 569.33

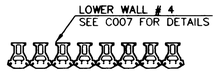

COURSE # 2
SCALE: 1"=5'
BOTTOM OF WALL 4 BLOCK: 570.00

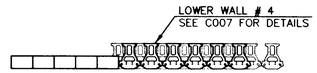

COURSE # 3
SCALE: 1"=5'
BOTTOM OF WALL 4 BLOCK: 570.67

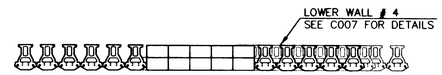

COURSE # 4
SCALE: 1"=5'
BOTTOM OF WALL 4 BLOCK: 571.33

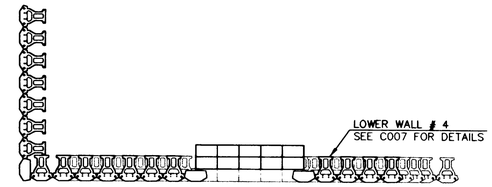

COURSE # 5
SCALE: 1"=5'
BOTTOM OF WALL 4 BLOCK: 572.00
BOTTOM OF WALL 3 BLOCK: 571.67

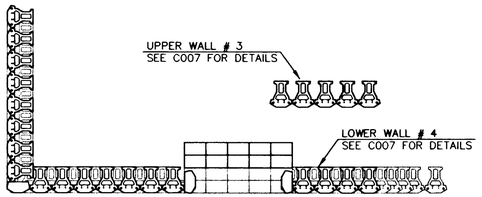

COURSE # 6
SCALE: 1"=5'
BOTTOM OF WALL 4 BLOCK: 572.67
BOTTOM OF WALL 3 BLOCK: 572.33

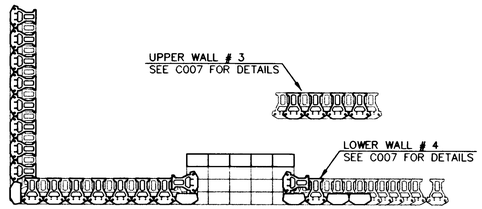

COURSE # 7
SCALE: 1"=5'
BOTTOM OF WALL 4 BLOCK: 573.33
BOTTOM OF WALL 3 BLOCK: 573.00

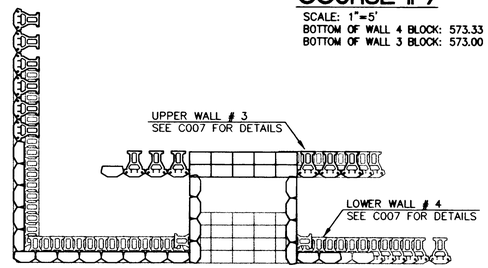

COURSE # 8
SCALE: 1"=5'
BOTTOM OF WALL 4 BLOCK: 574.00
BOTTOM OF WALL 3 BLOCK: 573.67

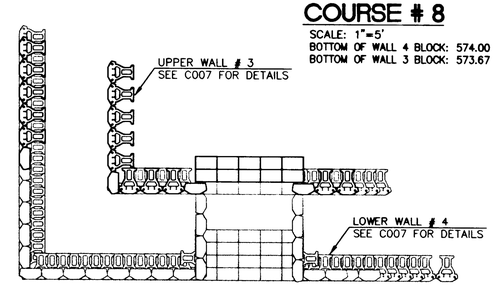

COURSE # 9
SCALE: 1"=5'
BOTTOM OF WALL 4 BLOCK: 574.67
BOTTOM OF WALL 3 BLOCK: 574.33

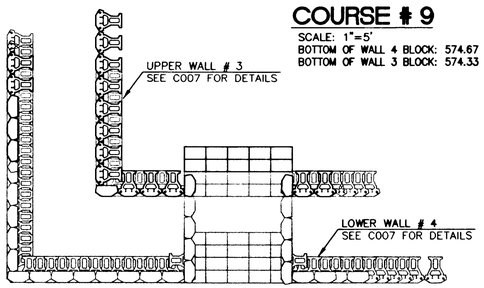

COURSE # 10
SCALE: 1"=5'
BOTTOM OF WALL 4 BLOCK: 575.33
BOTTOM OF WALL 3 BLOCK: 575.00

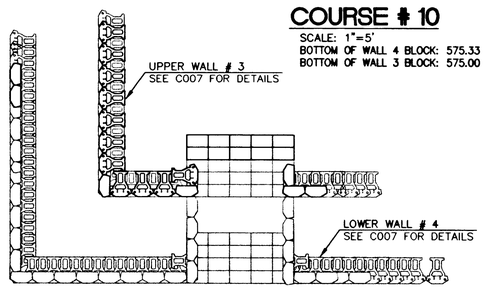

COURSE # 11
SCALE: 1"=5'
BOTTOM OF WALL 3 BLOCK: 575.67

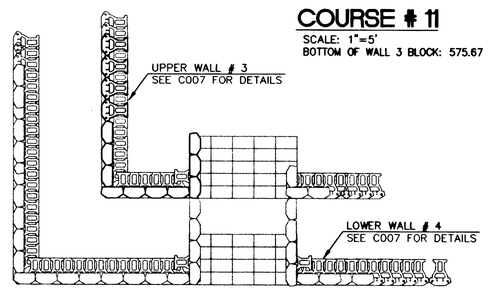

NOTE:
1. THESE DETAILS REPRESENT A PORTION OF KEYSTONE RETAINING WALLS # 3 & # 4. SEE SHEET C007 FOR COMPLETE WALL PROFILES. SEE SHEET C103 FOR A PLANVIEW LOCATION OF THESE STAIRS.

2. ALL BLOCKS NOT CONNECTED WITH THE STANDARD KEYSTONE PINS SHALL BE CONNECTED WITH "KEYSTONE KAPSEAL™ ADHESIVE" MASONRY ADHESIVE CONFORMING TO ASTM 2339-70.

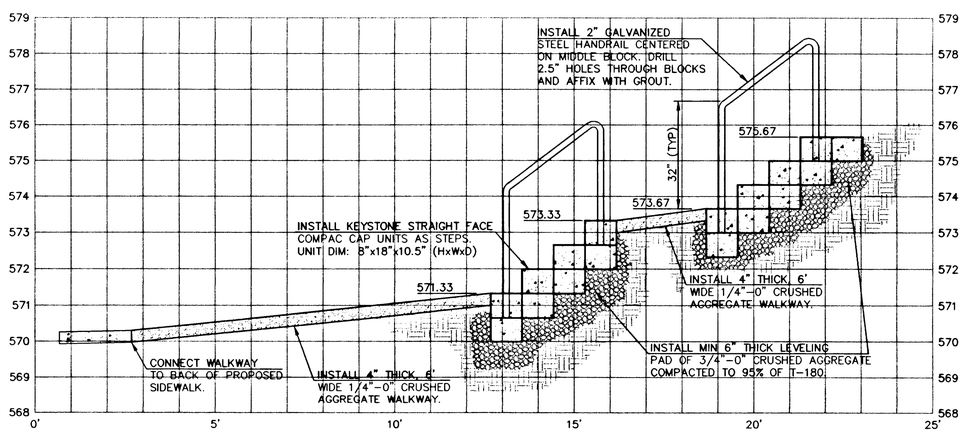

CROSS SECTION THROUGH STEPS
SCALE: 1"=2'

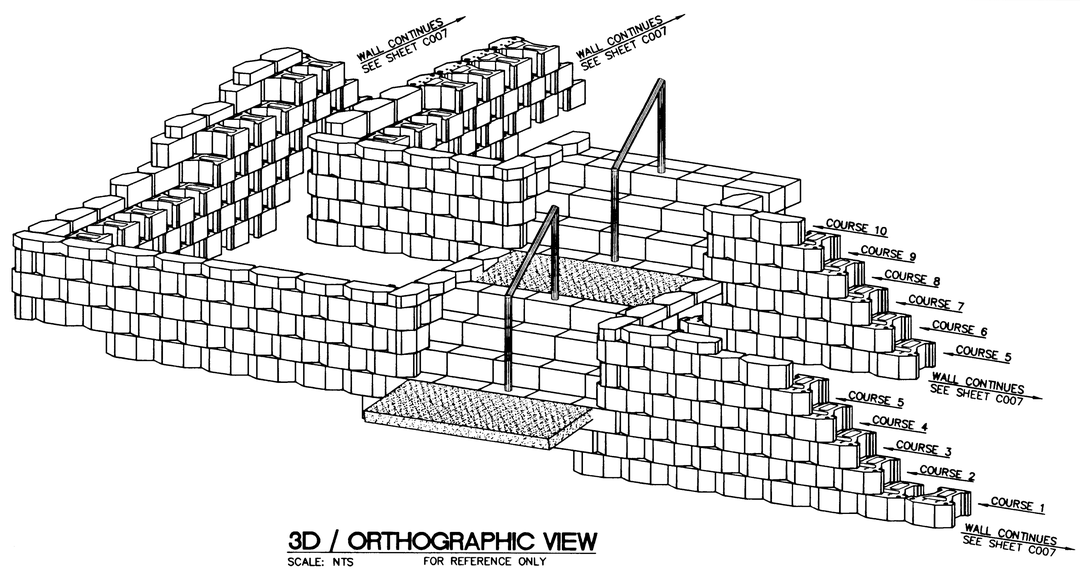

3D / ORTHOGRAPHIC VIEW
SCALE: NTS FOR REFERENCE ONLY

WRG DESIGN INC.
5415 S.W. Westgate Dr., Suite 100
Portland, Oregon 97221
☎ 503 | 419-2500 FAX: 503 | 419-2600
PLANNERS ▪ ENGINEERS ▪ LANDSCAPE ARCHITECTS ▪ SURVEYORS

REGISTERED PROFESSIONAL ENGINEER 19,172 OREGON JULY 15, 1997 RANDALL S. DYER
EXPIRES: 12/31/03

KEYSTONE WALL STAIR DETAILS
MACKENZIE ROSE ESTATES - P.U.D.
WEST LINN, OREGON

J.T. SMITH COMPANIES
N.A.I.C. U.S. INC.
22400 SALAMO ROAD, SUITE 204
WEST LINN, OREGON 97068

RECORD DRAWING
11/26/2001
THESE RECORD DRAWINGS HAVE BEEN PREPARED, IN PART, ON THE BASIS OF INFORMATION COMPILED AND FURNISHED BY THE CONTRACTOR, REVISED CONSTRUCTION PLANS, AND FIELD OBSERVATIONS DURING CONSTRUCTION.

PROJECT NO. JTS007

DATE	01/25/01
DRAFTED	J NEMEC
DESIGNED	J NEMEC
ENGINEER	R. DYER
CHECKED	

SHEET TITLE: WALL STAIRS

SHEET NUMBER: C009

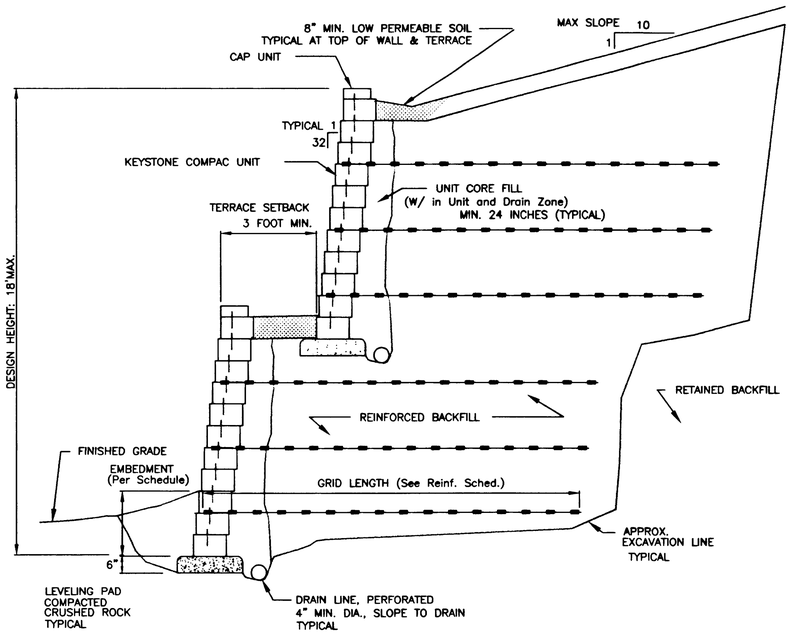

TYPICAL REINFORCED TERRACE SECTION

STANDARD UNITS – 1/4" SETBACK
SCALE: NONE

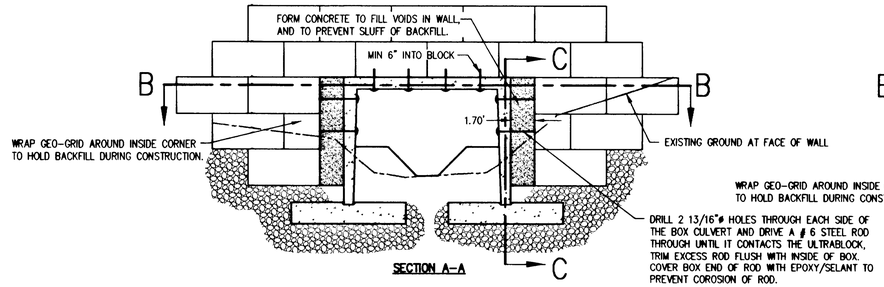

SECTION A–A

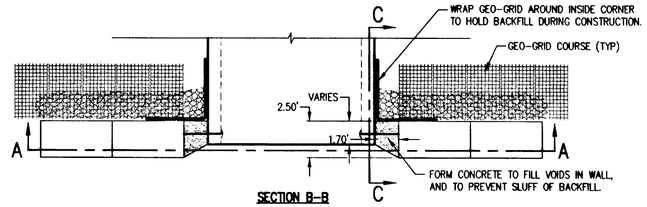

SECTION B–B

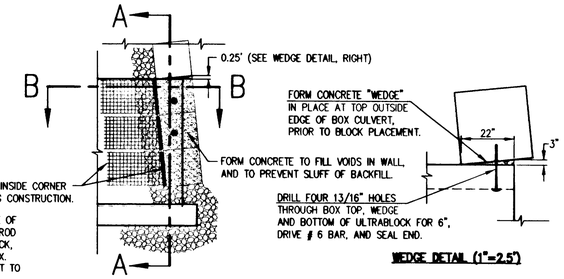

SECTION C–C

WEDGE DETAIL (1"=2.5')

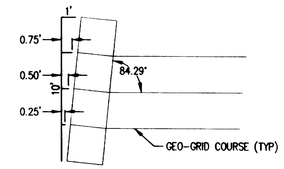

WALL BATTER SECTION DATA

BOX CULVERT / ULTRABLOCK WALL CONNECTION DETAIL

SCALE: 1"=5'

GEOGRID REINFORCING SCHEDULE

ASSUMPTIONS: LEVEL BACKSLOPE NO TRAFFIC SURCHARGE, 1H:32V WALL BATTER, COMPAC UNITS, FIRM COMPACTED FOUNDATION SUBGRADE, GRAVEL LEVELING PAD, REINFORCED FILL IS QUALIFIED NATIVE SILTY SOIL.

COMBINED MAX. WALL HEIGHT (FT.)	STRATA GRID REINF. TYPE	NUMBER OF LAYERS	EMBEDMENT DEPTH	REINF. LENGTH (FT.)	HEIGHT OF GEO-GRID COURSE FROM BASE OF FIRST BLOCK — GEO-GRID COURSE 1	2	3	4	5	6	7	8	9
2	N/A	N/A	0.67	N/A	NOTE: CONSTRUCT 3-FOOT WIDTH OF COMPACTED STRUCTURAL FILL BEHIND WALL FOR ALL HEIGHTS SHORTER THAN 3 FEET								
4	STRATA 200	2	0.67	4.0	1'–4"	2'–8"							
6	STRATA 200	1	0.67	5.0			4'–8"						
	STRATA 200	2	0.67	4.0	1'–4"	2'–8"							
8	STRATA 200	1	1.33	7.0				6'–8"					
	STRATA 200	3	1.33	5.0	1'–4"	2'–8"	4'–8"						
10	STRATA 200	1	1.33	7.0					8'–8"				
	STRATA 200	4	1.33	6.5	1'–4"	2'–8"	4'–8"	6'–8"					
12	STRATA 200	6	1.33	8.0	1'–4"	2'–8"	4'–8"	6'–8"	8'–8"	10'–8"			
14	STRATA 200	5	2	9.0			4'–8"	6'–8"	8'–8"	10'–8"	12'–8"		
	STRATA 500	2	2	9.0	0'–8"	2'–8"							
16	STRATA 200	5	2	10.5				6'–8"	8'–8"	10'–8"	12'–8"	14'–8"	
	STRATA 500	1	2	10.5			4'–8"						
	STRATA 600	2	2	10.5	0'–8"	2'–8"							
18	STRATA 200	5	2	11.5					8'–8"	10'–8"	12'–8"	14'–8"	16'–8"
	STRATA 500	1	2	11.5				6'–8"					
	STRATA 600	3	2	11.5	0'–8"	2'–8"	4'–8"						

WALL HEIGHT IS MEASURED FROM THE BASE OF THE FIRST BLOCK.

KEYSTONE GEOGRID REINFORCEMENT SCHEDULE

GEOGRID REINFORCING SCHEDULE

ASSUMPTIONS: LEVEL BACKSLOPE 250 PSF TRAFFIC SURCHARGE, 1H:10V WALL BATTER, ULTRABLOCK LOCK BLOCK UNITS, FIRM COMPACTED FOUNDATION SUBGRADE, GRAVEL LEVELING PAD, REINFORCED FILL IS CLEAN GRANULAR SOIL.

COMBINED MAX. WALL HEIGHT (FT.)	STRATA GRID REINF. TYPE	NUMBER OF LAYERS	EMBEDMENT DEPTH	REINF. LENGTH (FT.)	HEIGHT OF GEO-GRID COURSE FROM BASE OF FIRST BLOCK — GEO-GRID COURSE 1	2	3	4	5	6	7	8	9
2.5	N/A	N/A	1.0	N/A	GRAVITY WALL: CONSTRUCT 12-INCH THICK MINIMUM DRAIN ZONE BEHIND ALL WALLS 5 FEET AND SHORTER								
5	N/A	N/A	1.0	N/A	GRAVITY WALL: CONSTRUCT 12-INCH THICK MINIMUM DRAIN ZONE BEHIND ALL WALLS 5 FEET AND SHORTER								
7.5	STRATA 300	2	1.5	5.5	2'–6"	5'–0"							
10	STRATA 300	3	1.5	8.0	2'–6"	5'–0"	7'–6"						
12.5	STRATA 300	3	2.0	12.0		5'–0"	7'–6"	10'–0"					
	STRATA 600	1	2.0	12.0	2'–6"								
15	STRATA 300	3	2.0	12.0			7'–6"	10'–0"	12'–6"				
	STRATA 600	2	2.0	12.0	2'–6"	5'–0"							
17.5	STRATA 300	4	2.5	14.0			7'–6"	10'–0"	12'–6"	15'–0"			
	STRATA 600	2	2.5	14.0	2'–6"	5'–0"							
20	STRATA 300	4	2.5	15.0				10'–0"	12'–6"	15'–0"	17'–6"		
	STRATA 600	3	2.5	15.0	2'–6"	5'–0"	7'–6"						

WALL HEIGHT IS MEASURED FROM THE BASE OF THE FIRST BLOCK.

ULTRABLOCK GEOGRID REINFORCEMENT SCHEDULE

BASE LEVELING PAD NOTES:

1. THE LEVELING PAD IS TO BE CONSTRUCTED OF CRUSHED STONE OR 2,000 PSI± UNREINFORCED CONCRETE.
2. THE BASE FOUNDATION IS TO BE APPROVED BY THE SITE GEOTECHNICAL ENGINEER PRIOR TO PLACEMENT OF THE LEVELING PAD.

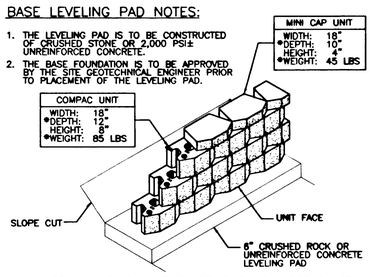

1 COMPAC UNIT/BASE PAD ISOMETRIC VIEW
SCALE: 3/8" = 1'-0"

*DIMENSIONS & WEIGHT MAY VARY BY REGION

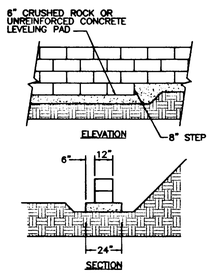

2 LEVELING PAD DETAIL
SCALE: 1/4" = 1'-0"

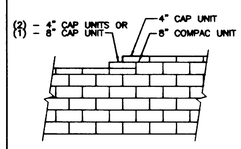

3 TOP OF WALL STEPS
SCALE: 1/4" = 1'-0"

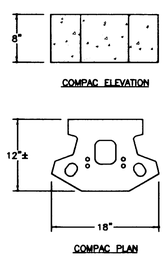

4 COMPAC UNIT
SCALE: 1" = 1'-0"

NOTE:

1. CHECK WITH MANUFACTURER SPECIFICATIONS ON CORRECT DIRECTION OF ORIENTATION FOR GEOGRID TO OBTAIN PROPER STRENGTH.

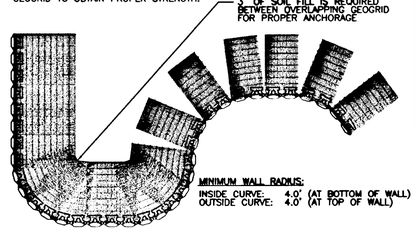

5 GEOGRID INSTALLATION ON CURVES
SCALE: 5/32" = 1'-0"

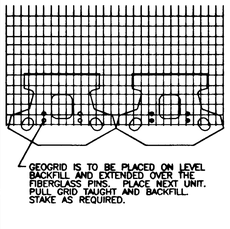

6 GRID & PIN CONNECTION
SCALE: 1" = 1'-0"

NOTE:

1. FOR PIPES LARGER THAN 24", A CONCRETE COLLAR MAY BE CAST AROUND PIPE FOR EASE OF CONSTRUCTION AND APPEARANCE.

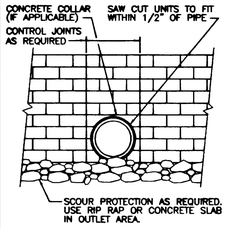

7 TYPICAL PIPE OUTLET DETAIL
SCALE: 1/4" = 1'-0"

THIS FRAME HAS BEEN INTENTIONALLY LEFT BLANK.

WRG DESIGN
5415 S.W. Westgate Dr., Suite 100
Portland, Oregon 97221
☎ 503 | 419-2500 FAX: 503 | 419-2600
PLANNERS ▪ ENGINEERS ▪ LANDSCAPE ARCHITECTS ▪ SURVEYORS

REGISTERED PROFESSIONAL ENGINEER 19,172 OREGON JULY 15, 1997 RANDALL S. DYER
EXPIRES: 12/31/03

RETAINING WALL DETAILS
MACKENZIE ROSE ESTATES – P.U.D.
WEST LINN, OREGON

J.T. SMITH COMPANIES
REAL ESTATE DEVELOPMENT
22400 SALAMO ROAD, SUITE 104
WEST LINN, OREGON 97068

RECORD DRAWING
11/26/2001

THESE RECORD DRAWINGS HAVE BEEN PREPARED, IN PART, ON THE BASIS OF INFORMATION COMPILED AND FURNISHED BY THE CONTRACTOR, REVISED CONSTRUCTION PLANS, AND FIELD OBSERVATIONS DURING CONSTRUCTION.

PROJECT NO. JTS007
DATE 01/25/01
DRAFTED J NEMEC
DESIGNED J NEMEC
ENGINEER R. DYER
CHECKED

SHEET TITLE: WALL DETAILS
SHEET NUMBER: C010

MACKENZIE ROSE ESTATES - P.U.D.

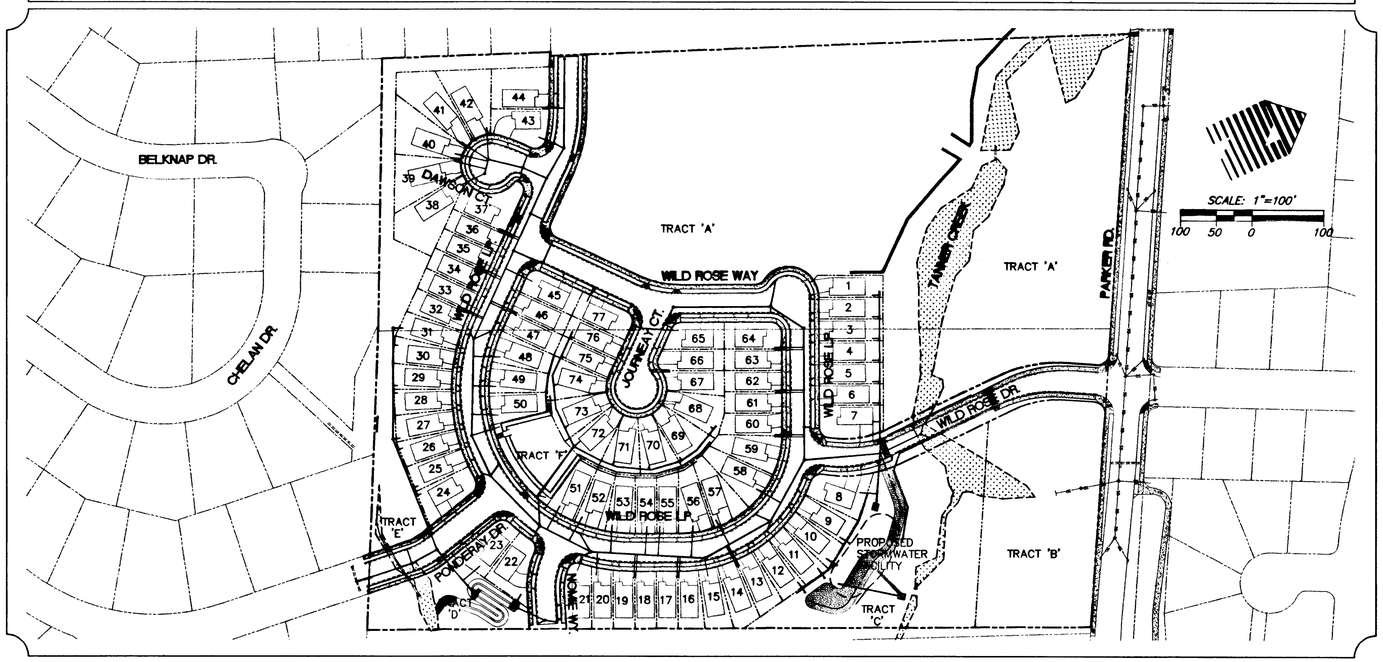

Index of Street/Storm Sheets

STREET AND STORM CONSTRUCTION PLANS

C100 Street/Storm Drain Cover Sheet
C100A Composite Storm Drain Plan
C101 Wild Rose Loop Sta: 10+00 to 15+00
C102 Wild Rose Loop Sta: 15+00 to 19+00
C103 Wild Rose Loop Sta: 19+00 to 23+58.09
C104 Wild Rose Loop
C105 Dawson Court and Journeay Court
C106 Ponderay Drive
C106A Storm Drain Lines "F", "G" & "M"
C107 Nomie Way
C108 Wild Rose Drive
C109 Storm Drain Line "Z", Box Culvert Detail
C110 Sheet Not Used
C111 Sheet Not Used
C112 W.Q./Detention Facility Details
C113 Private Storm Drain Lines "V" & "W"
C114 Private Storm Drain Line "T" & "U"
C115 Street and Storm Drain Details
C116 Storm Drain Details

Legend

- PROPOSED PUBLIC STORM LINE AND MANHOLE
- PROPOSED PRIVATE STORM LINE AND CLEANOUT
- PROPOSED PUBLIC STORM INLET
- EXISTING STORM FEATURES
- SIDEWALK TO BE INSTALLED AT THE TIME OF INITIAL STREET(S) CONSTRUCTION.
- SIDEWALK TO BE INSTALLED BY THE HOME BUILDER
- CENTERLINE OF RIGHT OF WAY
- RIGHT OF WAY/PROPERTY LINE
- PUBLIC EASMENT LINE
- 1 PROPOSED STREET CONSTRUCTION NOTE
- 23 PROPOSED CURB RETURN LABEL
- S SANITARY SEWER FEATURES ON SEPARATE SHEETS
- WATER FEATURES ON SEPARATE SHEETS

Street Construction Notes

1. ALL CONSTRUCTION SHALL BE IN CONFORMANCE WITH THE CURRENT EDITION OF THE CITY OF WEST LINN 'STREET/UTILITY DESIGN AND CONSTRUCTION STANDARDS' AND WITH APWA STANDARDS.
2. STATIONING IS BASED UPON STREET CENTERLINE UNLESS OTHERWISE SPECIFIED.
3. ADJUST ALL MANHOLES LIDS AND VALVE BOXES TO FINISHED GRADE.
4. ALL UTILITIES SHALL BE INSTALLED UNDERGROUND.
5. STREET LIGHTING SHALL BE IN ACCORDANCE WITH THE APPROVED STREET LIGHT PLAN.
6. UTILITY CONDUITS ARE TO BE ELECTRICAL GRADE SCHEDULE 40 PVC & EXTENDED TO 6' PAST RIGHT-OF-WAY LINES WITH 36" OF COVER.
7. SAWCUT STRAIGHT MATCHLINES TO MEET EXISTING PAVEMENT WITH NEW PAVEMENT. JOINTS BETWEEN NEW AND EXISTING PAVEMENT SHALL BE SEALED AND SANDED.
8. USE 3,300 PSI CONCRETE FOR ALL SIDEWALKS, CURBS, AND DRIVEWAYS PER THE CITY OF WEST LINN ENGINEERING STANDARDS AND APWA STANDARDS.
9. THE REQUIRED DENSITY FOR TREATED AND UNTREATED SUBGRADE MATERIALS SHALL NOT BE LESS THAN 95% MAXIMUM DENSITY AS DETERMINED BY AASHTO T-180.
10. THE CRUSHED ROCK BASE FOR PAVING SHALL BE COMPACTED TO 95% OF MAXIMUM DENSITY USING AASHTO T-180. THE DENSITY OF ASPHALT CONCRETE SHALL BE AT LEAST 92% OF THE THEORETICAL MAXIMUM DENSITY AS DETERMINED BY ODOT TM 306.
11. CONTRACTOR TO PROVIDE TRAFFIC CONTROL PER M.U.T.C.D. REQUIREMENTS.
12. ACCESS TO EXISTING TRACTS OF LAND SHALL BE PROVIDED FOR AT ALL TIMES.
13. EROSION CONTROL, DRAINAGE CONTROL AND DEBRIS CONTROL SHALL BE PROVIDED FOR AT ALL TIMES; AND SHALL BE IN PLACE PRIOR TO COMMENCEMENT OF CONSTRUCTION. UNSATISFACTORY PERFORMANCE IS CAUSE FOR TERMINATION OF ALL WORK AT THE SITE, UNTIL CORRECTION OCCURS SATISFACTORY TO THE CITY.
14. NOTIFY CITY INSPECTOR AT LEAST TWO BUSINESS DAYS BEFORE COMMENCING WORK. THE CITY INSPECTOR MUST WITNESS ALL COMPACTION TESTING AND MUST RECEIVE A COPY OF ALL TEST RESULTS.
15. THE AREA OF THE SITE DESIGNATED ON THE PLAN TO BE REGRADED SHALL BE STRIPPED TO REMOVE ORGANIC MATERIAL. SEE GEO TECHNICAL REPORT FOR DEPTH
16. ALL EMBANKMENT REQUIRED SHALL BE STRUCTURAL FILL MEETING THE REQUIREMENTS AND SPECIFICATIONS OF THE CITY OF WEST LINN. THE CONTRACTOR AND/OR DEVELOPER SHALL RETAIN A CERTIFIED TESTING FIRM AND PROVIDE TESTING AS REQUIRED BY THE CITY OF WEST LINN.
17. DURING CONSTRUCTION TWO PROOF-ROLLS WITH LOADED DUMP TRUCK SHALL BE REQUIRED, ONE PRIOR TO PLACEMENT OF ROCK BASE AND ONE PRIOR TO PLACEMENT OF ASPHALT CONCRETE PAVEMENT.
18. THE CITY OF WEST LINN SHALL INSTALL ALL REQUIRED PERMANENT TRAFFIC SIGNAGE AT DEVELOPER'S EXPENSE. THE CONTRACTOR SHALL NOTIFY THE CITY WHEN READY FOR SIGN INSTALLATION.
19. DESIGN AND CONSTRUCTION REQUIREMENTS NOT ADDRESSED IN THE CITY STANDARDS SHALL BE GOVERNED BY THE APWA STANDARDS
20. ALL SPECIFIED AGGREGATE (3/4"- 0") SHALL MEET CITY OF WEST LINN STANDARDS.
21. THE CONTRACTOR SHALL KEEP RECORDS OF ALL CONSTRUCTION THAT DIFFERS FROM THE APPROVED PLANS AND SHALL MAINTAIN "RECORD DRAWINGS" DURING THE CONSTRUCTION PERIOD.
22. ALL FEES FOR STREET TREES SHALL BE PAID TO THE CITY OF WEST LINN PARKS AND RECREATION DEPARTMENT BY THE DEVELOPER.

Storm Construction Notes

1. TESTING OF THE STORM DRAIN SYSTEM SHALL BE CONDUCTED IN ACCORDANCE WITH THE CITY OF WEST LINN STANDARDS. ALL NECESSARY TESTS SHALL BE PERFORMED BY THE CONTRACTOR AND WITNESSED BY A REPRESENTATIVE OF THE CITY AND THE ENGINEER.
2. LOCATION OF EXISTING UTILITIES ARE BASED ON AVAILABLE INFORMATION. IT IS THE CONTRACTORS RESPONSIBILITY TO FIELD VERIFY DEPTH AND LOCATIONS OF EXISTING UTILITIES PRIOR TO CONSTRUCTION AND INFORM THE ENGINEER OF ANY DISCREPANCIES IN THE PLANS. CALL FOR LOCATES A MINIMUM OF 48 HOURS PRIOR TO CONSTRUCTION.
3. FINISHED RIM ELEVATIONS OF MANHOLES WITHIN PAVEMENT ARE APPROXIMATE, FINAL FINISHED RIM ELEVATIONS SHALL MATCH FINISHED PAVEMENT GRADES. RIMS OUTSIDE OF PAVEMENT SHALL BE SET 6"-12" ABOVE FINISH GRADE.
4. PIPE BEDDING AND BACKFILL SHALL CONFORM TO THE CITY OF WEST LINN AND APWA STANDARDS.
5. STORM SEWER MANHOLE CONSTRUCTION SHALL CONFORM TO THE CITY OF WEST LINN AND APWA STANDARDS.
6. ALL STORM SEWER SERVICE LATERALS SHALL TERMINATE 2' BEYOND THE PUBLIC UTILITY EASEMENT UNLESS OTHERWISE NOTED, AND SHALL BE PLUGGED TO PREVENT DIRT AND DEBRIS FROM ENTERING PIPE IN ACCORDANCE WITH CITY STANDARDS. THE ENDS OF THE LATERALS SHALL BE MARKED WITH A WOOD 2"X4" SET VERTICALLY AND EXTENDING A MINIMUM OF 36" ABOVE FINISH GRADE. THE WOOD MARKER SHALL BE PAINTED AND MARKED AS DIRECTED BY A REPRESENTATIVE FROM THE CITY.
7. A MINIMUM OF EIGHTEEN INCHES (18") VERTICAL SEPARATION IS REQUIRED BETWEEN WATER AND SANITARY AND STORM LINES WHEN CROSSING. ALL CONSTRUCTION SHALL MEET CITY, DEQ, AND STATE WATER RESOURCES BOARD REQUIREMENTS FOR SEPARATION.
8. FOUR INCH TO 24 INCH STORM DRAIN PIPE (EXCEPT WHERE NOTED "DIP", SEE BELOW) SHALL BE CLASS 3, REINFORCED, CONCRETE PIPE CONFORMING TO ASTM C14, PVC PIPE CONFORMING TO ASTM D-3034 OR SEAMLESS PVC PIPE CONFORMING TO ASTM F794 (PW RIB OR ULTRA RIB). THIRTY-SIX INCH (36") DIAMETER STORM DRAIN PIPE SHALL BE CLASS 3, REINFORCED, CONCRETE PIPE CONFORMING TO ASTM C14, PVC PIPE CONFORMING TO ASTM D-3034 OR HDPE PIPE CONFORMING TO AASHTO M294S (ADS N-12 OR HANCOR HI-Q). RUBBER JOINTS ARE REQUIRED FOR ALL CONCRETE PIPE. D.I.P. SHALL BE DUCTILE IRON PIPE CONFORMING TO THE REQUIREMENTS OF ANSI 421.50-1 OR AWWA C150.1, CEMENT LINED PUSH-ON JOINT.
9. THE CONTRACTOR SHALL AT ALL TIMES ABIDE BY APPLICABLE SAFETY RULES OF O.S.H.A. AND IN PARTICULAR THOSE PERTAINING TO ADEQUATE SHORING AND TRENCH PROTECTION OF WORKMEN.
10. ALTERNATIVE STORM DRAINAGE PIPE MATERIALS MUST HAVE APPROVAL BY THE ENGINEER & CITY PRIOR TO USE. PUBLIC STORM LINES WITH LESS THAN 3' OF COVER SHALL BE DUCTILE IRON ENCASED IN CDF.
11. ALL PVC STORM DRAINS SHALL BE THOROUGHLY CLEANED, VIDEO INSPECTED AND DEFLECTION TESTED WITH A MANDREL PRIOR TO ACCEPTANCE. ALL REQUIRED TESTING SHALL BE PERFORMED BY THE CONTRACTOR.
12. ALL GRADING INCLUDING FILL SHALL BE COMPLETED, COMPACTED AND ACCEPTED, PRIOR TO BEGINNING INSTALLATION OF SEWER, STORM AND WATER FACILITIES.
13. NEW STORM SYSTEMS SHALL NOT BE CONNECTED TO EXISTING SYSTEMS PRIOR TO TESTING AND ACCEPTANCE BY THE CITY.
14. ALL CONNECTIONS TO EXISTING UTILITIES SHALL BE DONE IN THE PRESENCE OF A CITY REPRESENTATIVE.
15. STORM DRAIN BACKFILL SHALL BE 95% COMPACTION OF T-180.
16. TWO PROOF-ROLLS WITH LOADED DUMP TRUCK SHALL BE REQUIRED DURING CONSTRUCTION, ONE PRIOR TO PLACEMENT OF ROCK BASE AND ONE PRIOR TO PLACEMENT OF ASPHALT CONCRETE PAVEMENT.
17. **THE CONTRACTOR SHALL KEEP RECORDS OF ALL CONSTRUCTION THAT DIFFERS FROM THE APPROVED PLANS AND SHALL MAINTAIN "RECORD DRAWINGS" DURING THE CONSTRUCTION PERIOD. "RECORD DRAWINGS" SHALL BE SUBMITTED TO THE ENGINEER AT THE END OF THE PROJECT, OR A COPY THEREOF.**

WRG DESIGN INC.
5415 S.W. Westgate Dr., Suite 100
Portland, Oregon 97221
☎ 503 | 419-2500 FAX: 503 | 419-2600
PLANNERS • ENGINEERS • LANDSCAPE ARCHITECTS • SURVEYORS

REGISTERED PROFESSIONAL ENGINEER 19,172 OREGON JULY 15, 1997 RANDALL S. DYER
EXPIRES: 12/31/03

STREET/STORM DRAIN COVER SHEET
MACKENZIE ROSE ESTATES - P.U.D.
WEST LINN, OREGON

J.T. SMITH COMPANIES
PDX, INC. (DEVELOPER)
22460 SALAMO ROAD, SUITE 204
WEST LINN, OREGON, 97068

RECORD DRAWING
11/26/2001
THESE RECORD DRAWINGS HAVE BEEN PREPARED, IN PART, ON THE BASIS OF INFORMATION COMPILED AND FURNISHED BY THE CONTRACTOR, REVISED CONSTRUCTION PLANS, AND FIELD OBSERVATIONS DURING CONSTRUCTION.

PROJECT NO. JTS007
DATE 01/25/01
DRAFTED D. LAVOIE
DESIGNED J NEMEC
ENGINEER R. DYER
CHECKED
SHEET TITLE STREET/STORM
SHEET NUMBER C100

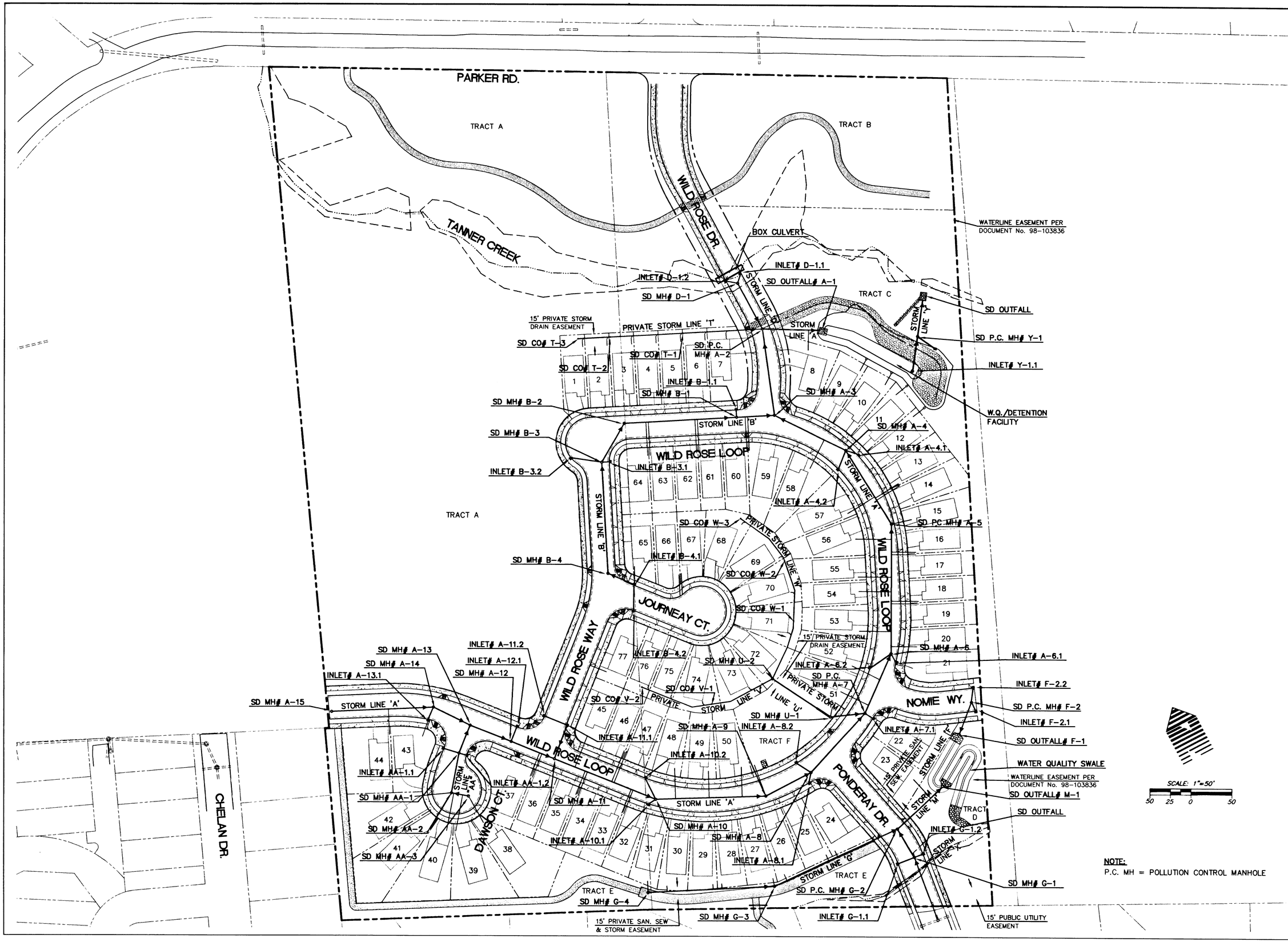

NOTE:
P.C. MH = POLLUTION CONTROL MANHOLE

W R G DESIGN INC.
5415 S.W. Westgate Dr., Suite 100
Portland, Oregon 97221
503 | 419-2500 FAX: 503 | 419-2600
PLANNERS • ENGINEERS • LANDSCAPE ARCHITECTS • SURVEYORS

REGISTERED PROFESSIONAL ENGINEER 19,172 OREGON JULY 15, 1997 RANDALL S. DYER
EXPIRES: 12/31/03

COMPOSITE STORM DRAIN PLAN
MACKENZIE ROSE ESTATES - P.U.D.

WEST LINN, OREGON

J.T. SMITH COMPANIES
REAL ESTATE DEVELOPMENT
22400 SALAMO ROAD, SUITE 204
WEST LINN, OREGON 97068

RECORD DRAWING
11/26/2001
THESE RECORD DRAWINGS HAVE BEEN PREPARED, IN PART, ON THE BASIS OF INFORMATION COMPILED AND FURNISHED BY THE CONTRACTOR, REVISED CONSTRUCTION PLANS, AND FIELD OBSERVATIONS DURING CONSTRUCTION.

PROJECT NO.	JTS007
DATE	01/25/01
DRAFTED	D. LAVOIE
DESIGNED	J NEMEC
ENGINEER	R. DYER
CHECKED	

SHEET TITLE
COMPOSITE STREET/STORM
SHEET NUMBER
C100A

CURB INLET DATA

SD INLET # A-10.1
INSTALL GUTTER INLET PER "WL-600"
STA: 14+16.21 14.00'RT WILD ROSE LP
GRATE: 575.63
IE OUT: 569.38
INSTALL 10.10LF 10" R-PVC
● S=0.0149

SD INLET # A-10.2
INSTALL GUTTER INLET PER "WL-600"
STA: 14+02.26 14.00'LT WILD ROSE LP
GRATE: 576.19
IE OUT: 570.58
INSTALL 28.67LF 10" R-PVC
● S=0.0562

SD INLET # A-11.1
INSTALL COMBINATION CURB INLET PER "WL-601"
STA: 1+39.00 14.00'RT WILD ROSE WY
GRATE: 580.61
IE IN: 574.76
IE OUT: 574.61
INSTALL 42.26LF 12" R-PVC
● S=0.0154

SD INLET # A-11.2
INSTALL COMBINATION CURB INLET PER "WL-601"
STA: 1+39.00 14.00'LT WILD ROSE WY
GRATE: 580.61
IE OUT: 575.32
INSTALL 28.00LF 10" R-PVC
● S=0.0200

SD INLET # A-12.1
INSTALL GUTTER INLET PER "WL-600"
STA: 12+33.40 14.00'LT WILD ROSE LP
GRATE: 582.94
IE OUT: 577.94
INSTALL 19.00LF 10" R-PVC
● S=0.0874

SD INLET # A-14.1
INSTALL GUTTER INLET PER "WL-600"
STA: 11+26.01 14.00'RT WILD ROSE LP
GRATE: 587.24
IE IN (4"SW): 581.89
IE OUT: 581.24
INSTALL 15.86LF 10" R-PVC
● S=0.0328

SD INLET # AA-1.1
INSTALL GUTTER INLET PER "WL-600"
STA: 1+43.41 14.00'RT DAWSON CT
GRATE: 584.50
IE OUT (10"NW): 578.96
INSTALL 19.07LF 10" R-PVC
● S=0.0100

SD INLET # AA-1.2
INSTALL GUTTER INLET PER "WL-600"
STA: 1+41.00 14.00'LT DAWSON CT
GRATE: 584.50
IE OUT (10"SE): 578.86
INSTALL 8.79LF 10" R-PVC
● S=0.0100

STREET CONSTRUCTION NOTES

1. CONSTRUCT CURB & GUTTER SEE SHEET C115 FOR DETAIL
2. BEGIN CONSTRUCTION 6' WIDE SIDEWALK STA. 9+99.04, 20'LT.
3. CONSTRUCT 6' WIDE SIDEWALK FROM STA. 10+00.96, 20'RT. TO STA. 10+16.25, 20'RT.
4. CONSTRUCT SIDEWALK & CURB RAMP From PC to PT of CURB RETURN SEE SHEET C115 FOR DETAIL "WL-507B"
5. CONSTRUCT CURB RAMP STA. 11+38.87, 14'LT. WILD ROSE LP SEE SHEET C115 FOR DETAIL "WL-506"
6. CONSTRUCT CURB RAMP STA. 12+47.12, 14'RT. WILD ROSE LP SEE SHEET C115 FOR DETAIL "WL-506"

CURB RETURN DATA

(1) PC STA. 11+28.16, 14'RT. (WILD ROSE LP)
GUTTER=587.15
1/4 = 586.49
1/2 = 585.61
3/4 = 584.83
PT STA. 1+41.41, 14'RT. (DAWSON CT)
GUTTER=584.50 – LOW POINT
Δ = 99°55'19"
R = 25.00'
T = 29.75'
L = 43.60'

(2) PC STA. 1+39.00, 14'LT. (DAWSON CT)
GUTTER=584.50
1/4 = 584.33
1/2 = 584.21
3/4 = 584.05
PT STA. 12+13.05, 14'RT. (WILD ROSE LP)
GUTTER=583.76
Δ = 90°00'00"
R = 25.00'
T = 25.00'
L = 39.27'

(3) PC STA. 1+39.00, 14'RT. (WILD ROSE WY)
GUTTER=580.61 – LOW POINT
1/4 = 580.72
1/2 = 581.46
3/4 = 582.33
PT STA. 12+35.05, 14'LT. (WILD ROSE LP)
GUTTER=582.88
Δ = 90°00'00"
R = 25.00'
T = 25.00'
L = 39.27'

(4) PC STA. 13+13.05, 14'LT. (WILD ROSE LP)
GUTTER=579.76
1/4 = 580.05
1/2 = 580.24
3/4 = 580.42
PT STA. 1+39.00, 14'LT. (WILD ROSE WY)
GUTTER=580.61
Δ = 90°00'00"
R = 25.00'
T = 25.00'
L = 39.27'

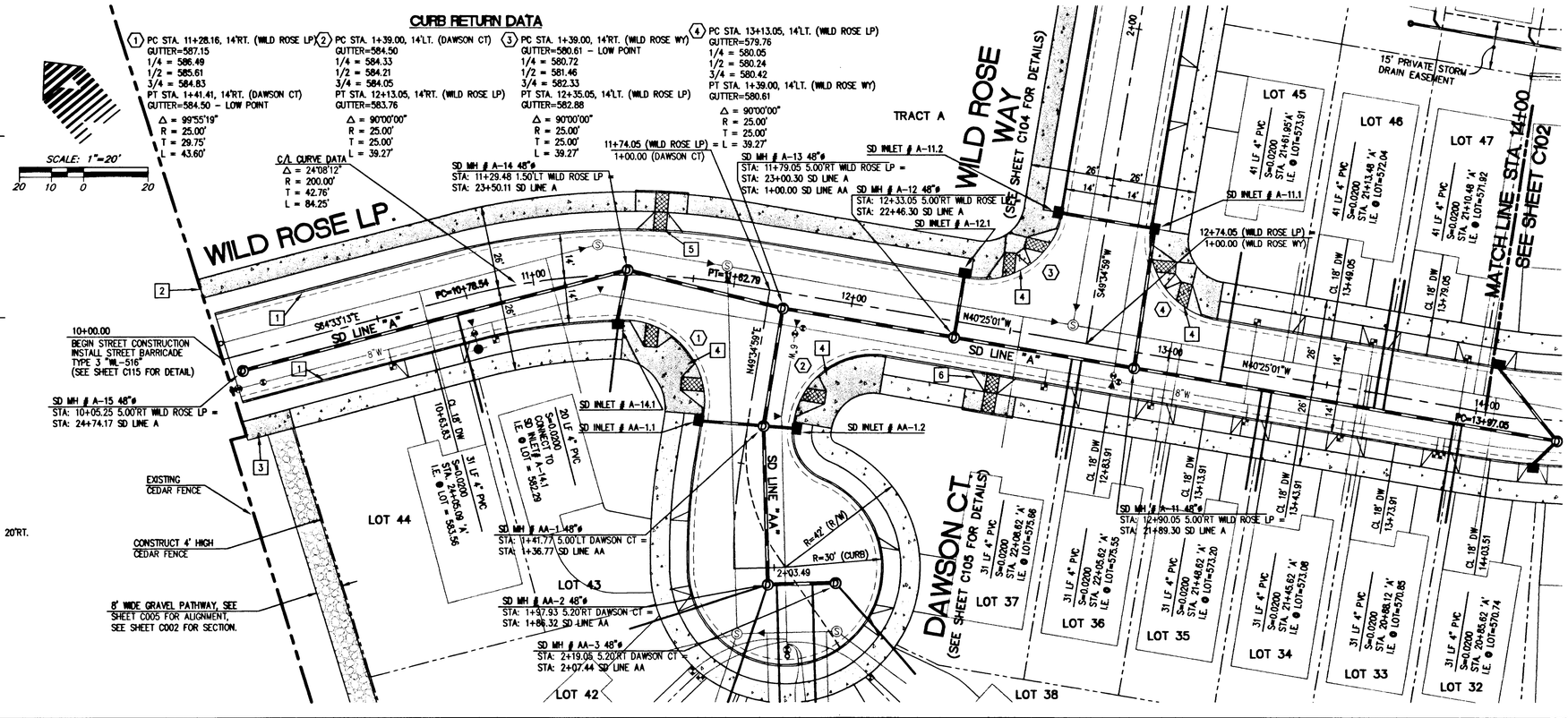

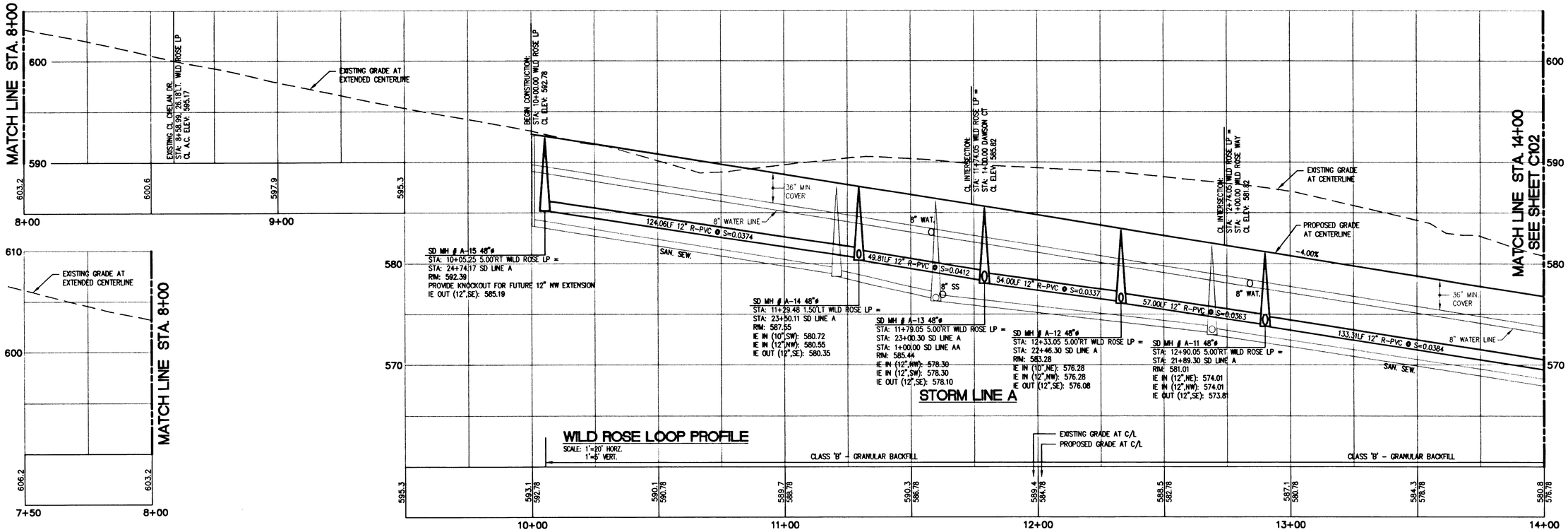

W R G DESIGN INC
5415 S.W. Westgate Dr., Suite 100
Portland, Oregon 97221
☎ 503 | 419-2500 FAX: 503 | 419-2600
PLANNERS ■ ENGINEERS ■ LANDSCAPE ARCHITECTS ■ SURVEYORS

REGISTERED PROFESSIONAL ENGINEER 19,172 OREGON JULY 15, 1993 RANDALL S. DYER
EXPIRES: 12/31/03

WILD ROSE LOOP STREET PLAN + PROFILE
MACKENZIE ROSE ESTATES - P.U.D.
WEST LINN, OREGON

J.T. SMITH COMPANIES
REAL ESTATE DEVELOPMENT
19600 SHAW-BERG DRIVE, SUITE 204
WEST LINN, OREGON 97068

RECORD DRAWING
11/26/2001
THESE RECORD DRAWINGS HAVE BEEN PREPARED, IN PART, ON THE BASIS OF INFORMATION COMPILED AND FURNISHED BY THE CONTRACTOR, REVISED CONSTRUCTION PLANS, AND FIELD OBSERVATIONS DURING CONSTRUCTION.

PROJECT NO. JTS007
DATE 01/25/01
DRAFTED D. LAVOIE
DESIGNED J NEMEC
ENGINEER R. DYER
CHECKED

SHEET TITLE STREET PLAN
SHEET NUMBER C101

J:\DATA\JTS007\AutoCAD\AS-BUILTS\AB-PLP-BASE.DWG WED NOV 21 12:16:48 2001 DBL

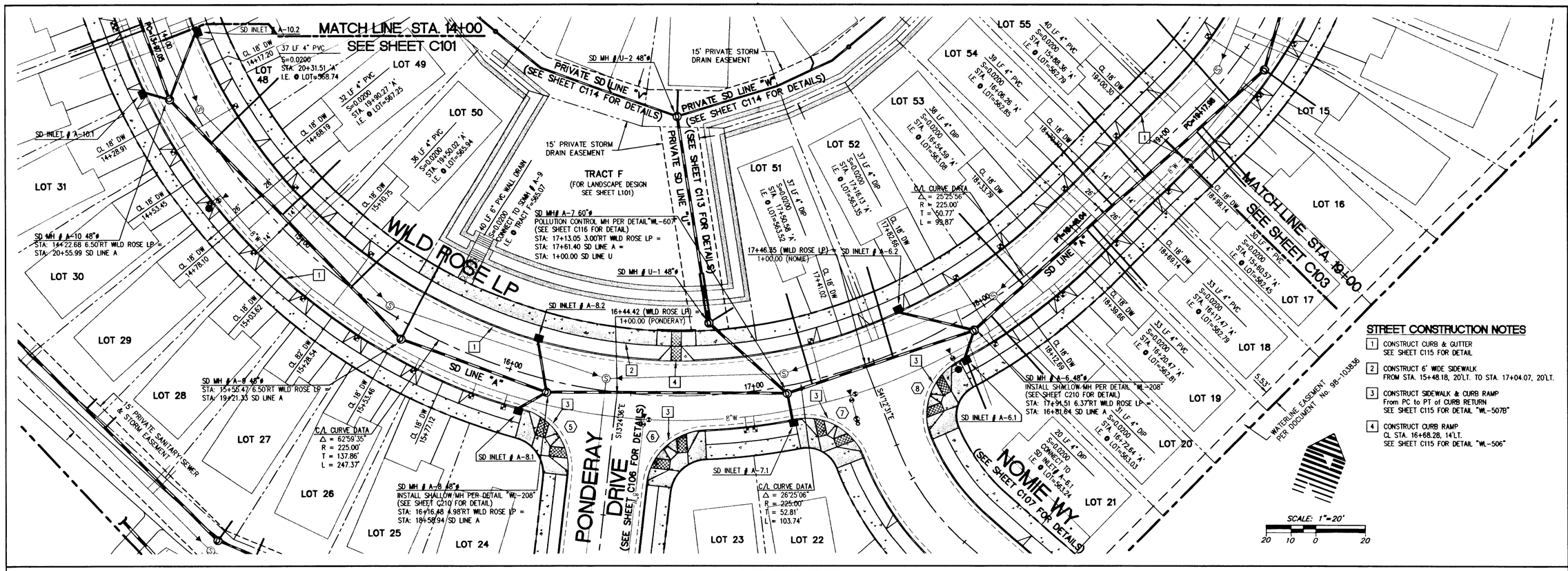

STREET CONSTRUCTION NOTES

1. CONSTRUCT CURB & GUTTER SEE SHEET C115 FOR DETAIL
2. CONSTRUCT 6' WIDE SIDEWALK FROM STA. 15+48.18, 20'LT. TO STA. 17+04.07, 20'LT.
3. CONSTRUCT SIDEWALK & CURB RAMP From PC to PT of CURB RETURN SEE SHEET C115 FOR DETAIL "WL-507B"
4. CONSTRUCT CURB RAMP CL STA. 16+68.28, 14'LT. SEE SHEET C115 FOR DETAIL "WL-506"

CURB INLET DATA

SD INLET # A-6.1
INSTALL GUTTER INLET PER "WL-600"
STA: 17+83.19 14.00'RT WILD ROSE LP
GRATE: 564.74
IE IN (4"SE): 562.84
IE OUT (10"N): 562.34
INSTALL 11.57LF 10" DIP
@ S=0.0060

SD INLET # A-6.2
INSTALL COMBINATION CURB INLET PER "WL-601"
STA: 17+67.73 14.00'LT WILD ROSE LP
GRATE: 564.72
IE OUT: 562.45
INSTALL 30.98LF 10" DIP
@ S=0.0060

SD INLET # A-7.1
INSTALL GUTTER INLET PER "WL-600"
STA: 17+13.24 14.00'RT WILD ROSE LP
GRATE: 565.15
IE OUT: 563.02
INSTALL 11.27LF 10" DIP
@ S=0.0177

SD INLET # A-8.1
INSTALL GUTTER INLET PER "WL-600"
STA: 16+07.78 14.00'RT WILD ROSE LP
GRATE: 567.98
IE OUT: 563.54
INSTALL 12.80LF 10" DIP
@ S=0.0060, DEFLECT 8" WATER MAIN UNDER INLET LATERAL

SD INLET # A-8.2
INSTALL GUTTER INLET PER "WL-600"
STA: 16+07.78 14.00'LT WILD ROSE LP
GRATE: 567.98
IE OUT: 563.59
INSTALL 20.80LF 10" DIP
@ S=0.0060

SD INLET # A-10.1
INSTALL GUTTER INLET PER "WL-600"
STA: 14+16.21 14.00'RT WILD ROSE LP
GRATE: 575.63
IE OUT: 572.13
INSTALL 10.10LF 10" R-PVC
@ S=0.2871

SD INLET # A-10.2
INSTALL GUTTER INLET PER "WL-600"
STA: 14+02.26 14.00'LT WILD ROSE LP
GRATE: 576.19
IE OUT: 572.69
INSTALL 28.67LF 10" R-PVC
@ S=0.1298

CURB RETURN DATA

(5) PC STA. 16+09.34, 14'RT. (WILD ROSE LP)
GUTTER=567.91
1/4 = 567.37
1/2 = 566.58
3/4 = 565.75
PT STA. 17+35.80, 16'RT. (PONDERAY)
GUTTER=565.08
Δ = 81°03'56"
R = 25.00'
T = 21.38'
L = 35.37'

(6) PC STA. 14+35.80, 16'LT. (PONDERAY)
GUTTER=565.08
1/4 = 565.52
1/2 = 565.77
3/4 = 565.85 – HIGH POINT
PT STA. 15+79.51, 14'RT. (WILD ROSE LP)
GUTTER=565.75
Δ = 81°03'56"
R = 25.00'
T = 21.38'
L = 35.37'

(7) PC STA. 17+13.98, 14'RT. (WILD ROSE LP)
GUTTER=565.13
1/4 = 564.86
1/2 = 564.38
3/4 = 563.83
PT STA. 1+35.04, 14'RT. (NOMIE)
GUTTER=563.36
Δ = 79°54'50"
R = 25.00'
T = 20.95'
L = 34.87'

(8) PC STA. 1+38.55, 14'LT. (NOMIE)
GUTTER=563.20
1/4 = 563.69
1/2 = 564.17
3/4 = 564.55
PT STA. 17+80.76, 14'RT. (WILD ROSE LP)
GUTTER=564.73
Δ = 85°04'29"
R = 25.00'
T = 22.94'
L = 37.12'

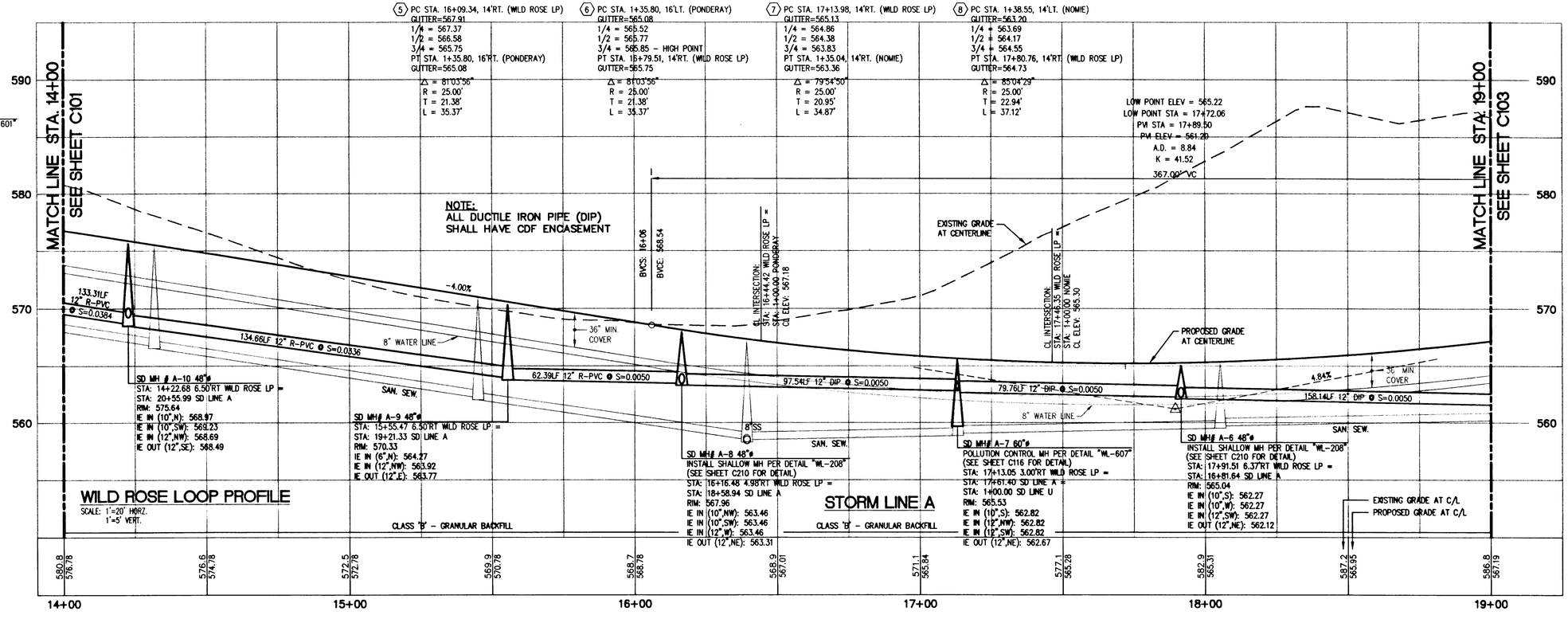

WILD ROSE LOOP PROFILE

SCALE: 1"=20' HORZ.
1"=5' VERT.

STORM LINE A

W R G DESIGN INC.
5415 S.W. Westgate Dr., Suite 100
Portland, Oregon 97221
☎ 503 | 419-2500 FAX: 503 | 419-2600
PLANNERS • ENGINEERS • LANDSCAPE ARCHITECTS • SURVEYORS

REGISTERED PROFESSIONAL ENGINEER 19,172 OREGON JULY 15, 1997 RANDALL S. DYER
EXPIRES: 12/31/03

WILD ROSE LOOP STREET PLAN + PROFILE
MACKENZIE ROSE ESTATES – P.U.D.
WEST LINN, OREGON

J.T. SMITH COMPANIES
REAL ESTATE DEVELOPMENT
22400 SALAMO ROAD, SUITE 204
WEST LINN, OREGON 97068

RECORD DRAWING
11/26/2001
THESE RECORD DRAWINGS HAVE BEEN PREPARED, IN PART, ON THE BASIS OF INFORMATION COMPILED AND FURNISHED BY THE CONTRACTOR, REVISED CONSTRUCTION PLANS, AND FIELD OBSERVATIONS DURING CONSTRUCTION.

PROJECT NO. JTS007

DATE	01/25/01
DRAFTED	D. LAVOIE
DESIGNED	J NEMEC
ENGINEER	R. DYER
CHECKED	

SHEET TITLE: STREET PLAN

SHEET NUMBER: C102

J:\DATA\JTS007\Autocad\AS-BUILTS\AB-CD-BASE.dwg Wed Nov 21 11:52:30 2001 DGL

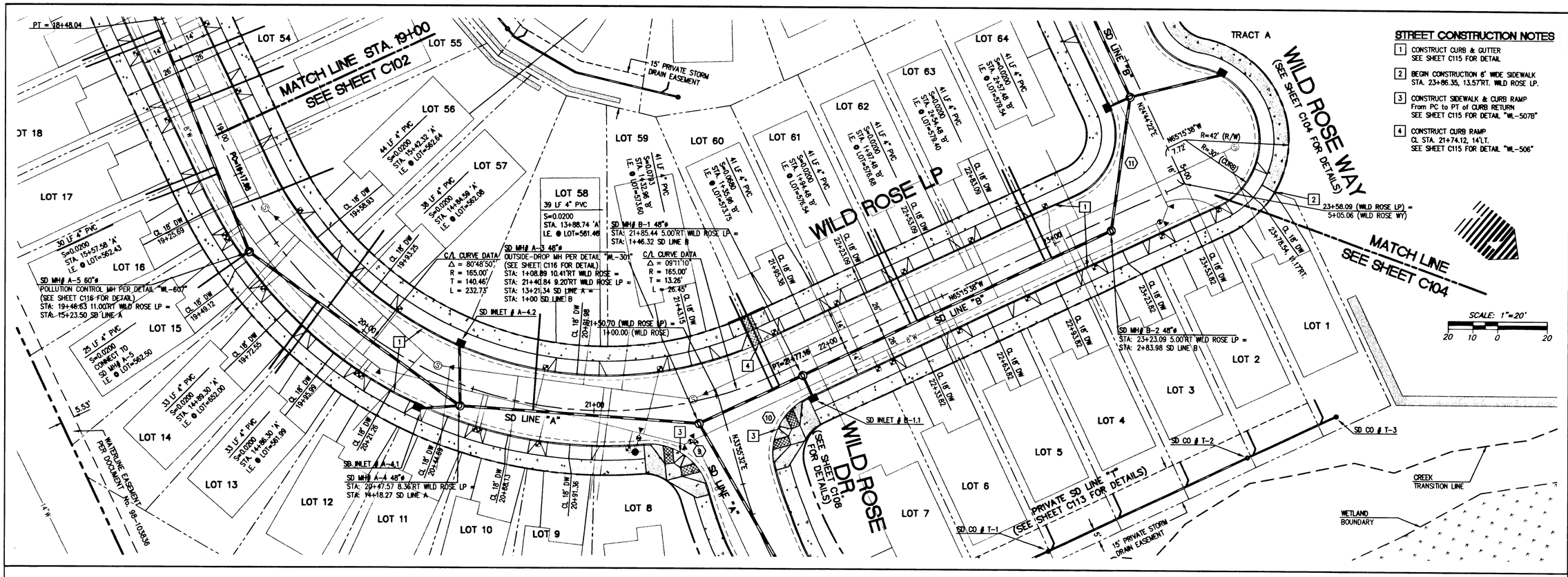

STREET CONSTRUCTION NOTES

1. CONSTRUCT CURB & GUTTER SEE SHEET C115 FOR DETAIL
2. BEGIN CONSTRUCTION 6' WIDE SIDEWALK STA. 23+86.35, 13.57'RT. WILD ROSE LP.
3. CONSTRUCT SIDEWALK & CURB RAMP From PC to PT of CURB RETURN SEE SHEET C115 FOR DETAIL "WL-507B"
4. CONSTRUCT CURB RAMP CL STA. 21+74.12, 14'LT. SEE SHEET C115 FOR DETAIL "WL-506"

CURB INLET DATA

SD INLET # A-4.1
INSTALL GUTTER INLET PER "WL-600"
STA: 20+32.98 14.00'RT WILD ROSE LP
GRATE: 572.48
IE OUT (10",NW): 566.48
INSTALL 15.53LF 10" R-PVC
● S=0.3722

SD INLET # A-4.2
INSTALL GUTTER INLET PER "WL-600"
STA: 20+38.38 14.00'LT WILD ROSE LP
GRATE: 572.76
IE OUT: 564.37
INSTALL 24.11LF 10" R-PVC
● S=0.1522

SD INLET # B-1.1
INSTALL GUTTER INLET PER "WL-600"
STA: 21+85.44 14.00'RT WILD ROSE LP
GRATE: 579.86
IE OUT: 573.35
INSTALL 9.00 LF 10" R-PVC
● S=0.0289

CURB RETURN DATA

(9) PC STA. 21+18.97, 14'RT. (WILD ROSE LP)
GUTTER=576.65
1/4 = 576.99
1/2 = 577.16
3/4 = 577.17 - HIGH POINT
PT STA. 1+35.47, 14'RT. (WILD ROSE)
GUTTER=576.94
Δ = 79°31'16"
R = 25.00'
T = 20.80'
L = 34.70'

(10) PC STA. 1+34.98, 14'LT. (WILD ROSE)
GUTTER=576.96
1/4 =577.49
1/2 = 578.31
3/4 = 579.16
PT STA. 21+83.69, 14'RT. (WILD ROSE LP)
GUTTER=579.78
Δ = 79°59'10"
R = 25.00'
T = 20.97'
L = 34.90'

(11) PC STA. 4+64.06, 14'RT. (WILD ROSE. WY)
GUTTER=587.59
1/4 = 587.38
1/2 = 587.09
3/4 = 586.71
PT STA. 23+17.09, 14'LT. (WILD ROSE LP)
GUTTER=586.24
Δ = 90°00'00"
R = 27.00'
T = 27.00'
L = 42.41'

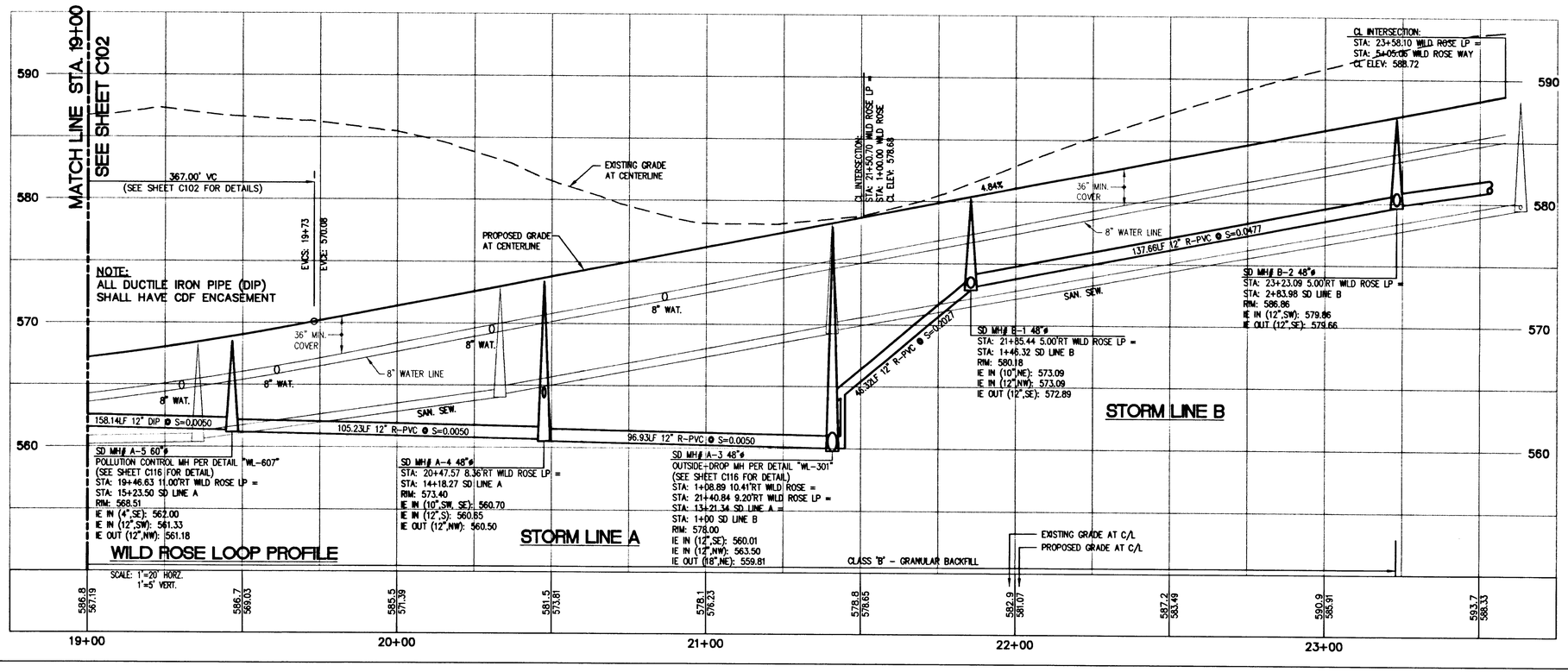

WILD ROSE LOOP PROFILE

W R G DESIGN INC
5415 S.W. Westgate Dr., Suite 100
Portland, Oregon 97221
☎ 503 | 419-2500 FAX: 503 | 419-2600
PLANNERS • ENGINEERS • LANDSCAPE ARCHITECTS • SURVEYORS

REGISTERED PROFESSIONAL ENGINEER 19,172 OREGON JULY 15, 1997 RANDALL S. DYER
EXPIRES: 12/31/03

WILD ROSE LOOP STREET PLAN + PROFILE
MACKENZIE ROSE ESTATES - P.U.D.
WEST LINN, OREGON

J.T. SMITH COMPANIES
REAL ESTATE DEVELOPMENT
4900 SALAMO ROAD, SUITE 204
WEST LINN, OREGON 97068

RECORD DRAWING
11/26/2001
THESE RECORD DRAWINGS HAVE BEEN PREPARED, IN PART, ON THE BASIS OF INFORMATION COMPILED AND FURNISHED BY THE CONTRACTOR, REVISED CONSTRUCTION PLANS, AND FIELD OBSERVATIONS DURING CONSTRUCTION.

PROJECT NO. JTS007

DATE	01/25/01
DRAFTED	D. LAVOIE
DESIGNED	J NEMEC
ENGINEER	R. DYER
CHECKED	

SHEET TITLE: STREET PLAN
SHEET NUMBER: C103

J:\DATA\JTS007\Autocad\AS-BUILTS\AB-CD-BASE.dwg Wed Nov 21 11:50:57 2001 DGL

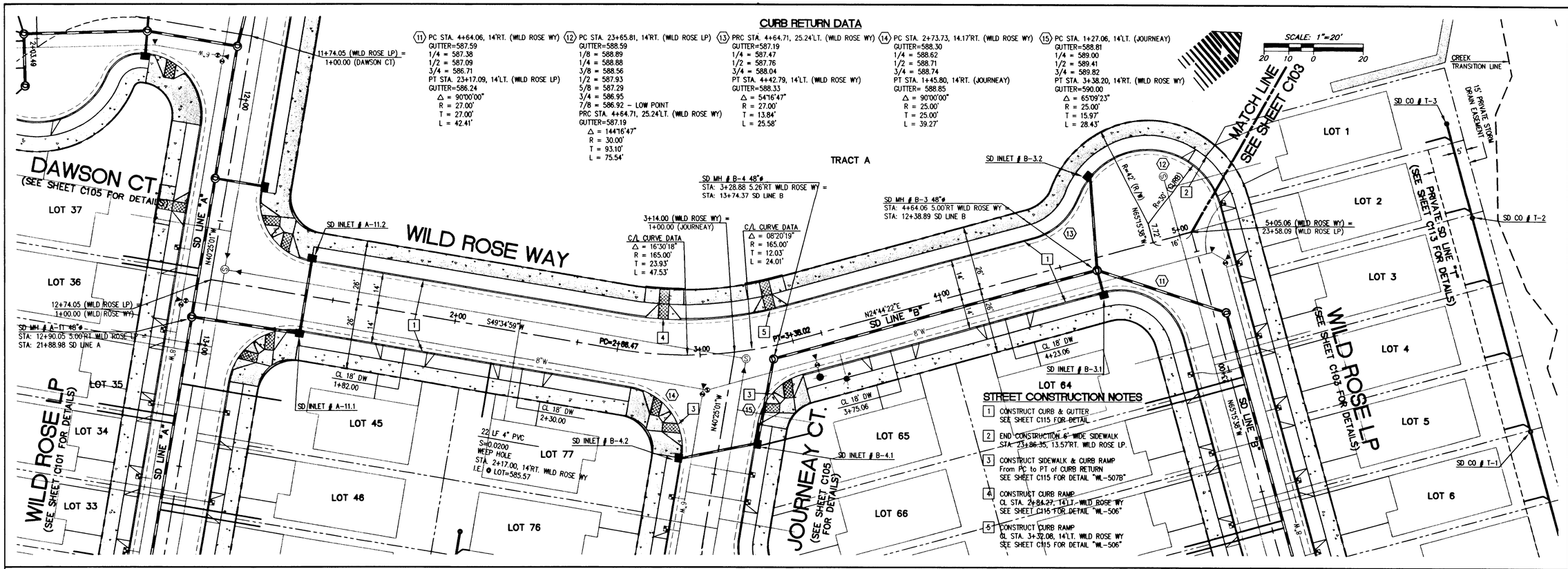

CURB RETURN DATA

(11) PC STA. 4+64.06, 14'RT. (WILD ROSE WY)
GUTTER=587.59
1/4 = 587.38
1/2 = 587.09
3/4 = 586.71
PT STA. 23+17.09, 14'LT. (WILD ROSE LP)
GUTTER=586.24
Δ = 90°00'00"
R = 27.00'
T = 27.00'
L = 42.41'

(12) PC STA. 23+65.81, 14'RT. (WILD ROSE LP)
GUTTER=588.59
1/8 = 588.89
1/4 = 588.88
3/8 = 588.56
1/2 = 587.93
5/8 = 587.29
3/4 = 586.95
7/8 = 586.92 – LOW POINT
PRC STA. 4+64.71, 25.24'LT. (WILD ROSE WY)
GUTTER=587.19
Δ = 144°16'47"
R = 30.00'
T = 93.10'
L = 75.54'

(13) PRC STA. 4+64.71, 25.24'LT. (WILD ROSE WY)
GUTTER=587.19
1/4 = 587.47
1/2 = 587.76
3/4 = 588.04
PT STA. 4+42.79, 14'LT. (WILD ROSE WY)
GUTTER=588.33
Δ = 54°16'47"
R = 27.00'
T = 13.84'
L = 25.58'

(14) PC STA. 2+73.73, 14.17'RT. (WILD ROSE WY)
GUTTER=588.30
1/4 = 588.62
1/2 = 588.71
3/4 = 588.74
PT STA. 1+45.80, 14'RT. (JOURNEAY)
GUTTER= 588.85
Δ = 90°00'00"
R = 25.00'
T = 25.00'
L = 39.27'

(15) PC STA. 1+27.06, 14'LT. (JOURNEAY)
GUTTER=588.81
1/4 = 589.00
1/2 = 589.41
3/4 = 589.82
PT STA. 3+38.20, 14'RT. (WILD ROSE WY)
GUTTER=590.00
Δ = 65°09'23"
R = 25.00'
T = 15.97'
L = 28.43'

STREET CONSTRUCTION NOTES

1. CONSTRUCT CURB & GUTTER SEE SHEET C115 FOR DETAIL
2. END CONSTRUCTION 6' WIDE SIDEWALK STA. 23+86.35, 13.57'RT. WILD ROSE LP.
3. CONSTRUCT SIDEWALK & CURB RAMP From PC to PT of CURB RETURN SEE SHEET C115 FOR DETAIL "WL-507B"
4. CONSTRUCT CURB RAMP CL STA. 2+84.27, 14'LT. WILD ROSE WY SEE SHEET C115 FOR DETAIL "WL-506"
5. CONSTRUCT CURB RAMP CL STA. 3+32.06, 14'LT. WILD ROSE WY SEE SHEET C115 FOR DETAIL "WL-506"

CURB INLET DATA

SD INLET # A-11.1
INSTALL COMBINATION CURB INLET PER "WL-601"
STA: 1+39.00 14.00'RT WILD ROSE WY
GRATE: 580.61
IE IN: 574.76
IE OUT: 574.61
INSTALL 42.26LF 12" R-PVC
@ S=0.0154

SD INLET # A-11.2
INSTALL COMBINATION CURB INLET PER "WL-601"
STA: 1+39.00 14.00'LT WILD ROSE WY
GRATE: 580.61
IE OUT: 575.32
INSTALL 28.00LF 10" R-PVC
@ S=0.0182

SD INLET # B-3.1
INSTALL GUTTER INLET PER "WL-600"
STA: 4+64.06 14'RT WILD ROSE WY
GRATE: 587.61
IE OUT: 581.61
INSTALL 9.00LF 10" R-PVC
@ S=0.0544

SD INLET # B-3.2
INSTALL COMBINATION CURB INLET PER "WL-601"
STA: 4+71.32 31.91'LT WILD ROSE WY
GRATE: 586.92
IE OUT: 582.19
INSTALL 37.62LF 10" R-PVC
@ S=0.0284

SD INLET # B-4.1
INSTALL COMBINATION CURB INLET PER "WL-601"
STA: 1+35.00 14.00'LT JOURNEAY CT
GRATE: 588.76
IE IN (4"N): 584.06
IE IN (10"SW): 583.56
IE OUT (12"NW): 583.41
INSTALL 33.19LF 12" R-PVC
@ S=0.0084

SD INLET # B-4.2
INSTALL COMBINATION CURB INLET PER "WL-601"
STA: 1+45.80 14.00'RT JOURNEAY CT
GRATE: 588.86
IE OUT: 583.86
INSTALL 30.01LF 10" R-PVC
@ S=0.0100

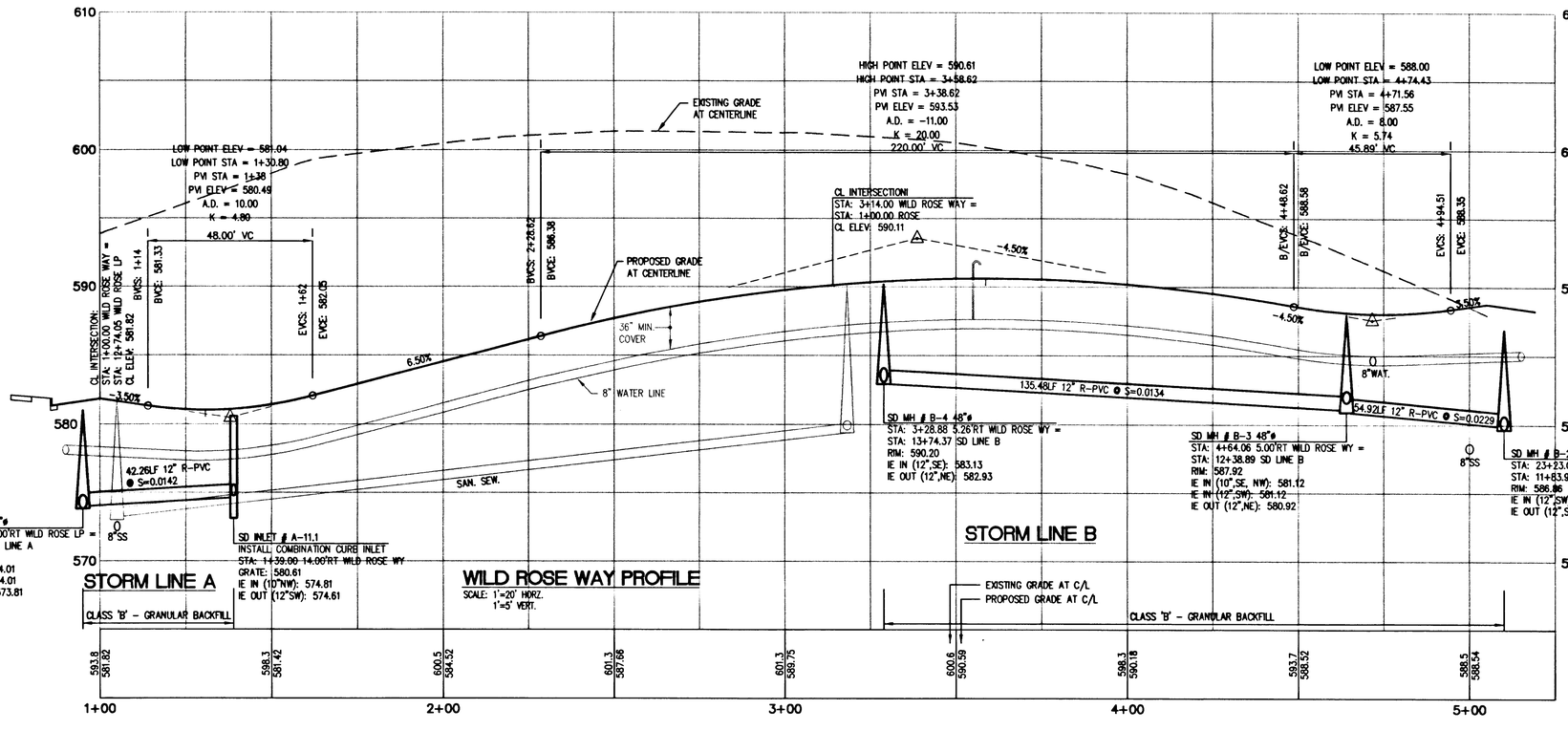

WILD ROSE WAY PROFILE

SCALE: 1'=20' HORZ.
1'=5' VERT.

W R G DESIGN INC
5415 S.W. Westgate Dr., Suite 100
Portland, Oregon 97221
☎ 503 | 419-2500 FAX: 503 | 419-2600
PLANNERS ▪ ENGINEERS ▪ LANDSCAPE ARCHITECTS ▪ SURVEYORS

REGISTERED PROFESSIONAL ENGINEER 19,172 OREGON JULY 15, 1997 RANDALL S. DYER
EXPIRES: 12/31/03

WILD ROSE WAY STREET PLAN + PROFILE
MACKENZIE ROSE ESTATES - P.U.D.
WEST LINN, OREGON

J.T. SMITH COMPANIES
REAL ESTATE DEVELOPMENT
22400 SALAMO ROAD, SUITE 204
WEST LINN, OREGON 97068

RECORD DRAWING
11/26/2001
THESE RECORD DRAWINGS HAVE BEEN PREPARED, IN PART, ON THE BASIS OF INFORMATION COMPILED AND FURNISHED BY THE CONTRACTOR, REVISED CONSTRUCTION PLANS, AND FIELD OBSERVATIONS DURING CONSTRUCTION.

PROJECT NO. JTS007
DATE 01/25/01
DRAFTED D. LAVOIE
DESIGNED J NEMEC
ENGINEER R. DYER
CHECKED

SHEET TITLE
STREET PLAN

SHEET NUMBER
C104

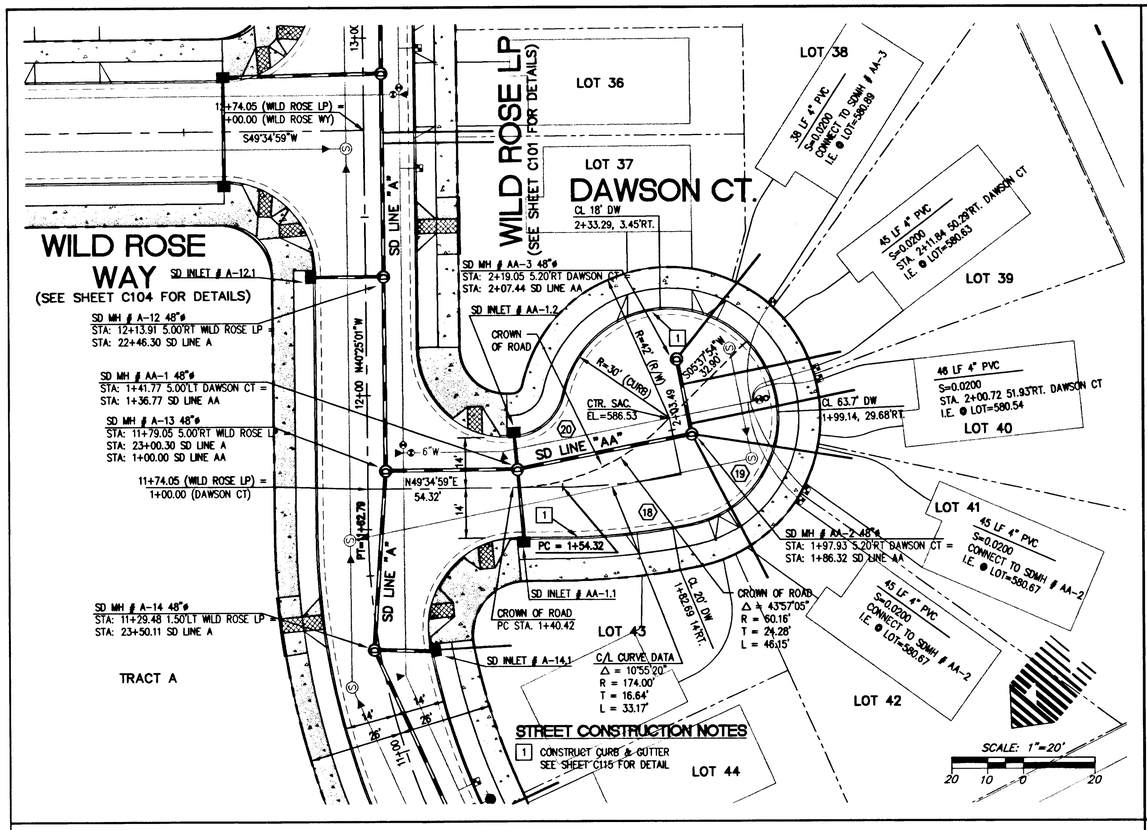

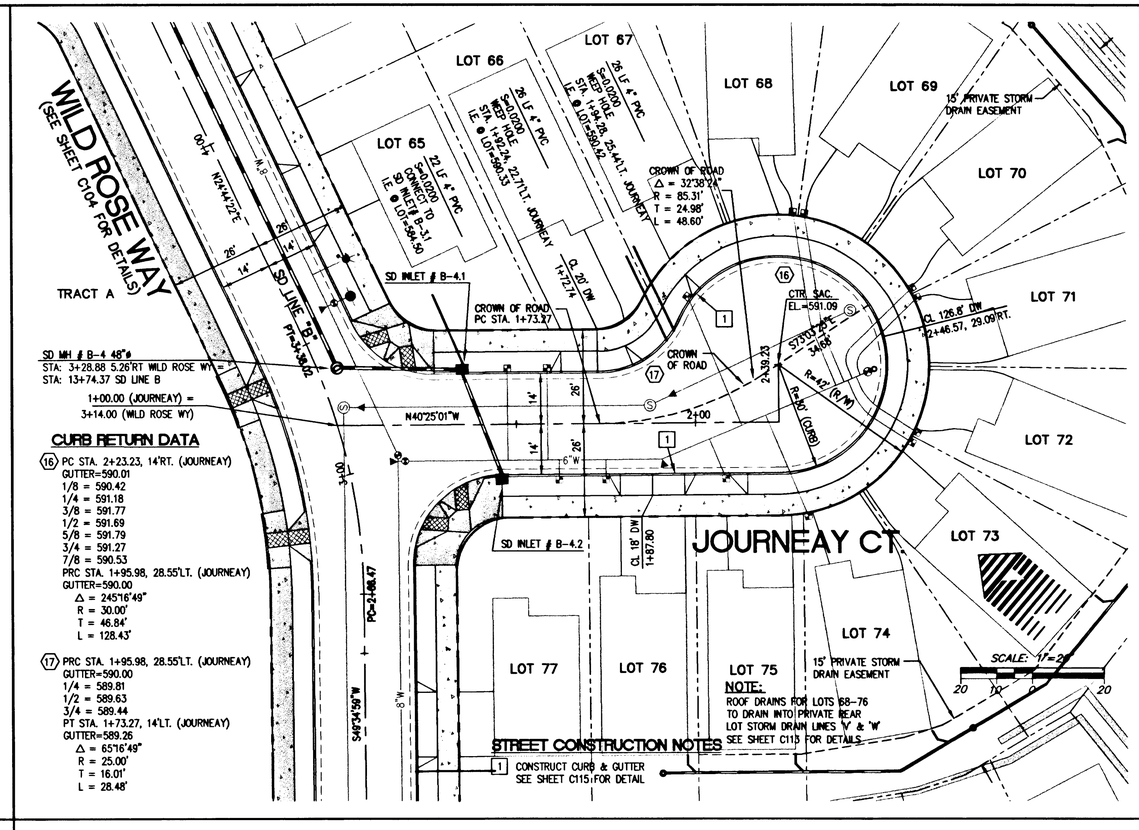

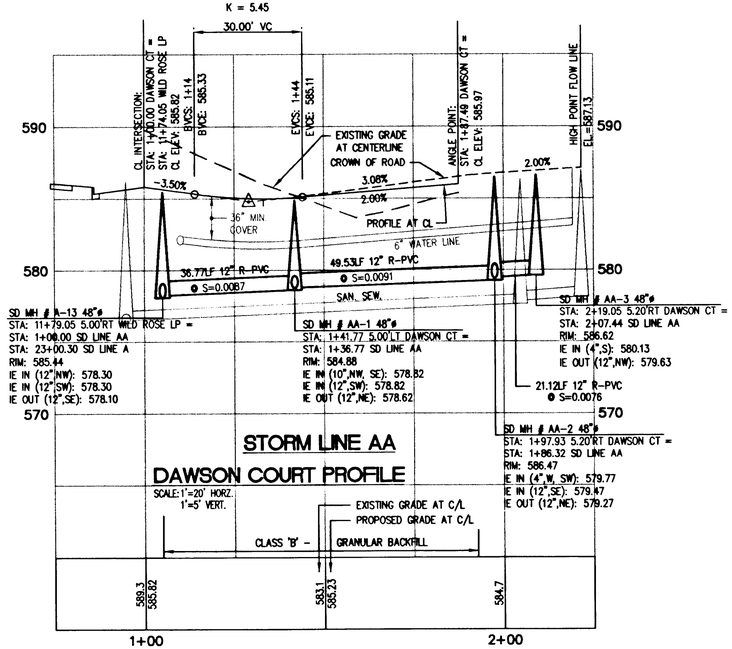

CURB INLET DATA

SD INLET # AA-1.1
INSTALL GUTTER INLET PER "WL-600"
STA: 1+43.41 14.00'RT DAWSON CT
GRATE: 584.50
IE OUT (10"NW): 578.96
INSTALL 19.07LF 10" R-PVC
● S=0.0100

SD INLET # AA-1.2
INSTALL GUTTER INLET PER "WL-600"
STA: 1+41.00 14.00'LT DAWSON CT
GRATE: 584.50
IE OUT (10"SE): 578.86
INSTALL 8.79LF 10" R-PVC
● S=0.0100

CURB RETURN DATA

18 PC STA. 1+54.32, 14'RT. (DAWSON CT)
GUTTER=584.76
1/4 = 584.94
1/2 = 585.12
3/4 = 585.30
PCC STA. 1+87.49, 14"RT. (DAWSON CT)
GUTTER=585.48
Δ = 10°55'20"
R = 188.00'
T = 17.97'
L = 35.84'

19 PCC STA. 1+87.49, 14'RT. (DAWSON CT)
GUTTER=585.48
1/8 = 585.92
1/4 = 586.47
3/8 = 586.93
1/2 = 587.13
5/8 = 586.86
3/4 = 586.24
7/8 = 585.52
PRC STA. 1+55.15, 25.62'LT. (DAWSON CT)
GUTTER=584.97
Δ = 246°03'29"
R = 30.00'
L = 128.84'

20 PRC STA. 1+55.15, 25.62'LT. (DAWSON CT)
GUTTER=584.97
1/4 = 584.85
1/2 = 584.72
3/4 = 584.60
PT STA. 1+40.42, 14'LT. (DAWSON CT)
GUTTER=584.50
Δ = 76°58'49"
R = 15.00'
T = 11.93'
L = 20.15'

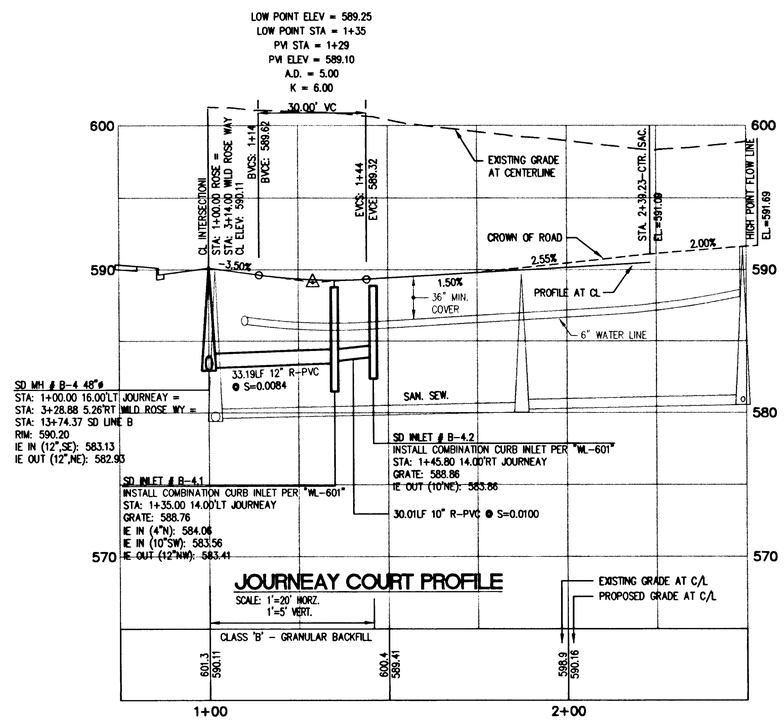

CURB INLET DATA

SD INLET # B-4.1
INSTALL COMBINATION CURB INLET PER "WL-601"
STA: 1+35.00 14.00'LT JOURNEAY CT
GRATE: 588.76
IE IN (4"N): 584.06
IE IN (10"SW): 583.56
IE OUT (12"NW): 583.41
INSTALL 33.19LF 12" R-PVC
● S=0.0084

SD INLET # B-4.2
INSTALL COMBINATION CURB INLET PER "WL-601"
STA: 1+45.80 14.00'RT JOURNEY CT
GRATE: 588.86
IE OUT: 583.86
INSTALL 30.01LF 10" R-PVC
● S=0.0100

W R G
DESIGN, INC.
5415 S.W. Westgate Dr., Suite 100
Portland, Oregon 97221
☎ 503|419-2500 FAX: 503|419-2600
PLANNERS • ENGINEERS • LANDSCAPE ARCHITECTS • SURVEYORS

REGISTERED PROFESSIONAL ENGINEER 19,172 OREGON JULY 15, 1997 RANDALL S. DYER
EXPIRES: 12/31/03

DAWSON CT. AND JOURNEAY CT. STREET/STORM PLAN
MACKENZIE ROSE ESTATES - P.U.D.
WEST LINN, OREGON

J.T. SMITH COMPANIES
REAL ESTATE DEVELOPMENT
22400 SALAMO ROAD, SUITE 204
WEST LINN, OREGON 97068

RECORD DRAWING
11/26/2001
THESE RECORD DRAWINGS HAVE BEEN PREPARED, IN PART, ON THE BASIS OF INFORMATION COMPILED AND FURNISHED BY THE CONTRACTOR, REVISED CONSTRUCTION PLANS, AND FIELD OBSERVATIONS DURING CONSTRUCTION.

PROJECT NO. JTS007
DATE 01/25/01
DRAFTED D. LAVOIE
DESIGNED J. NEMEC
ENGINEER R. DYER
CHECKED
SHEET TITLE STREET PLAN
SHEET NUMBER C105

J:\DATA\JTS007\Autocad\AS-BUILTS\AB-CD-BASE.DWG Wed Nov 21 11:23:19 2001 DBL

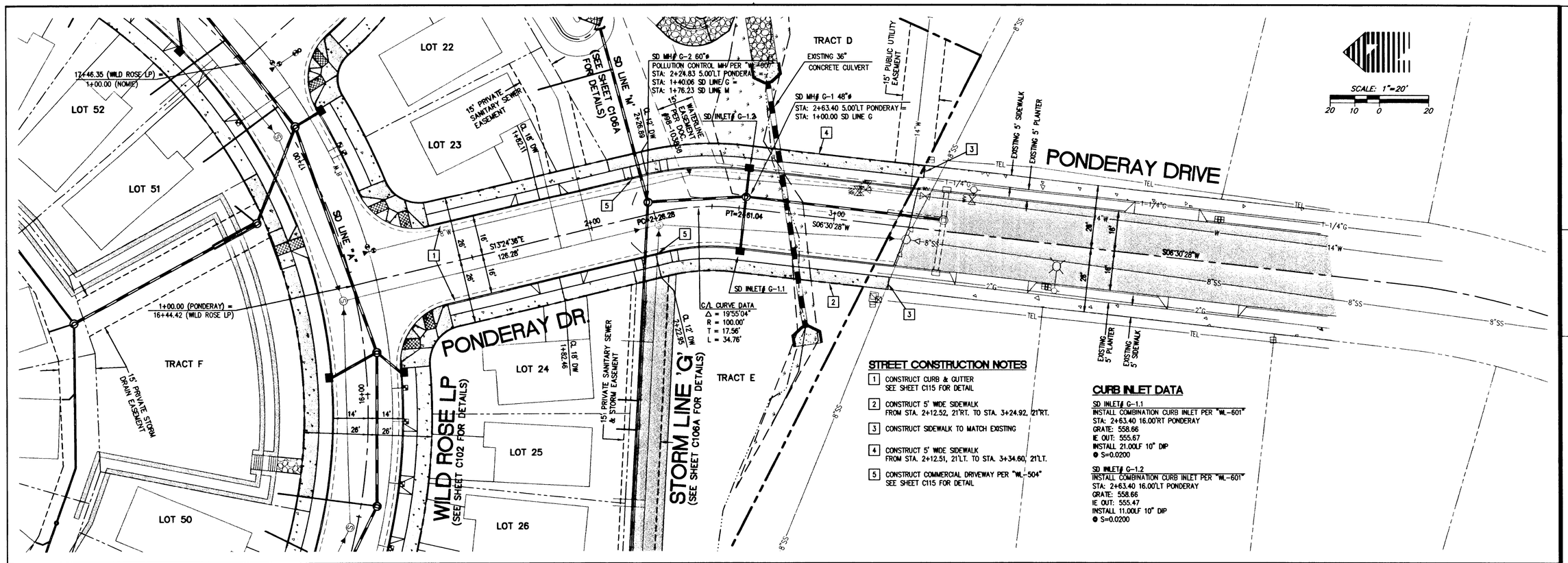

STREET CONSTRUCTION NOTES

1. CONSTRUCT CURB & GUTTER SEE SHEET C115 FOR DETAIL
2. CONSTRUCT 5' WIDE SIDEWALK FROM STA. 2+12.52, 21'RT. TO STA. 3+24.92, 21'RT.
3. CONSTRUCT SIDEWALK TO MATCH EXISTING
4. CONSTRUCT 5' WIDE SIDEWALK FROM STA. 2+12.51, 21'LT. TO STA. 3+34.60, 21'LT.
5. CONSTRUCT COMMERCIAL DRIVEWAY PER "WL-504" SEE SHEET C115 FOR DETAIL

CURB INLET DATA

SD INLET# G-1.1
INSTALL COMBINATION CURB INLET PER "WL-601"
STA: 2+63.40 16.00'RT PONDERAY
GRATE: 558.66
IE OUT: 555.67
INSTALL 21.00LF 10" DIP
@ S=0.0200

SD INLET# G-1.2
INSTALL COMBINATION CURB INLET PER "WL-601"
STA: 2+63.40 16.00'LT PONDERAY
GRATE: 558.66
IE OUT: 555.47
INSTALL 11.00LF 10" DIP
@ S=0.0200

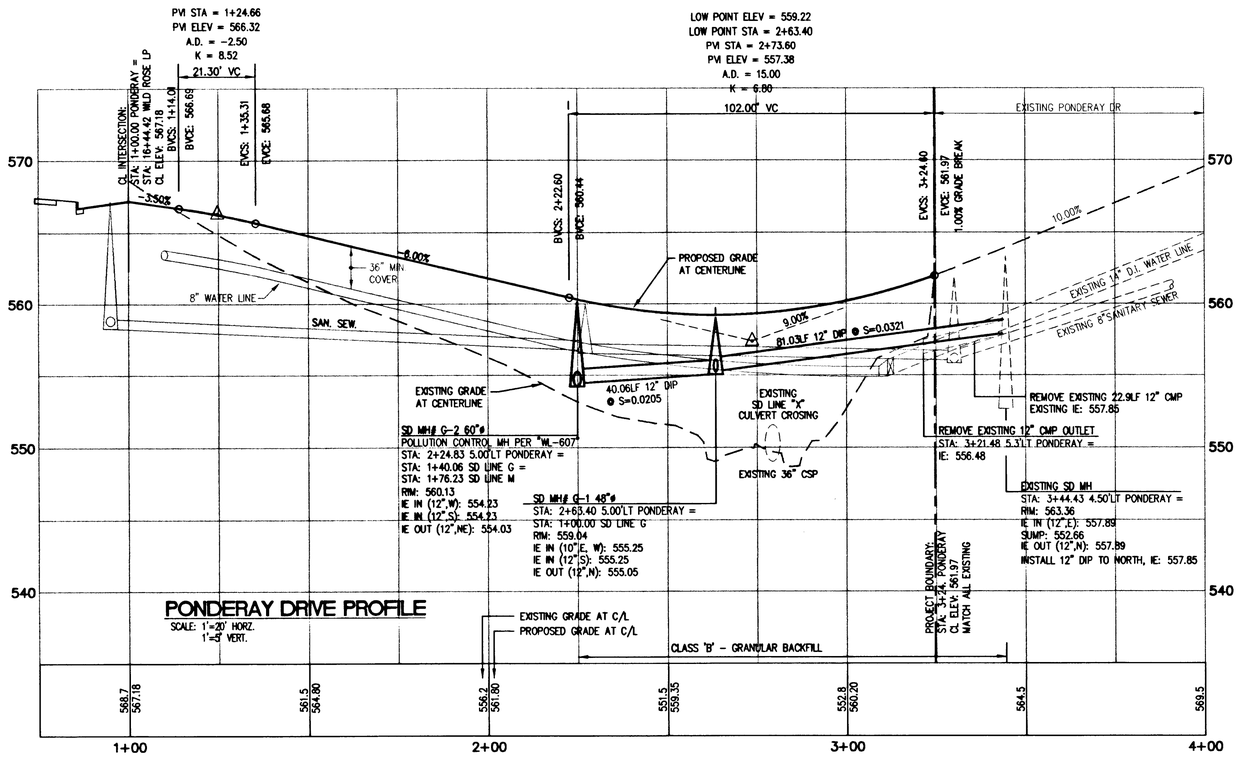

PONDERAY DRIVE PROFILE

SCALE: 1"=20' HORZ.
1"=5' VERT.

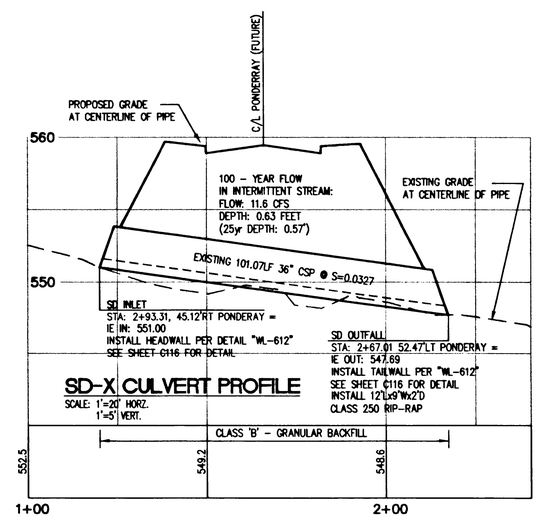

SD-X CULVERT PROFILE

SCALE: 1"=20' HORZ.
1"=5' VERT.

WRG DESIGN INC
5415 S.W. Westgate Dr., Suite 100
Portland, Oregon 97221
☎ 503 | 419-2500 FAX: 503 | 419-2600
PLANNERS • ENGINEERS • LANDSCAPE ARCHITECTS • SURVEYORS

REGISTERED PROFESSIONAL ENGINEER 19,172 OREGON JULY 15, 1997 RANDALL S. DYER
EXPIRES: 12/31/03

PONDERAY DRIVE STREET PLAN + PROFILE
MACKENZIE ROSE ESTATES - P.U.D.
WEST LINN, OREGON

J.T. SMITH COMPANIES
REAL ESTATE DEVELOPMENT
22400 SALAMO ROAD, STE. 204
WEST LINN, OREGON 97068

RECORD DRAWING
11/26/2001
THESE RECORD DRAWINGS HAVE BEEN PREPARED, IN PART, ON THE BASIS OF INFORMATION COMPILED AND FURNISHED BY THE CONTRACTOR, REVISED CONSTRUCTION PLANS, AND FIELD OBSERVATIONS DURING CONSTRUCTION.

PROJECT NO. JTS007
DATE 01/25/01
DRAFTED D. LAVOIE
DESIGNED J NEMEC
ENGINEER R. DYER
CHECKED

SHEET TITLE
STREET PLAN
SHEET NUMBER
C106

J:\DATA\JTS007\Autocad\AS-BUILTS\AB-CD-BASE.dwg Wed Nov 21 11:47:19 2001 DGL

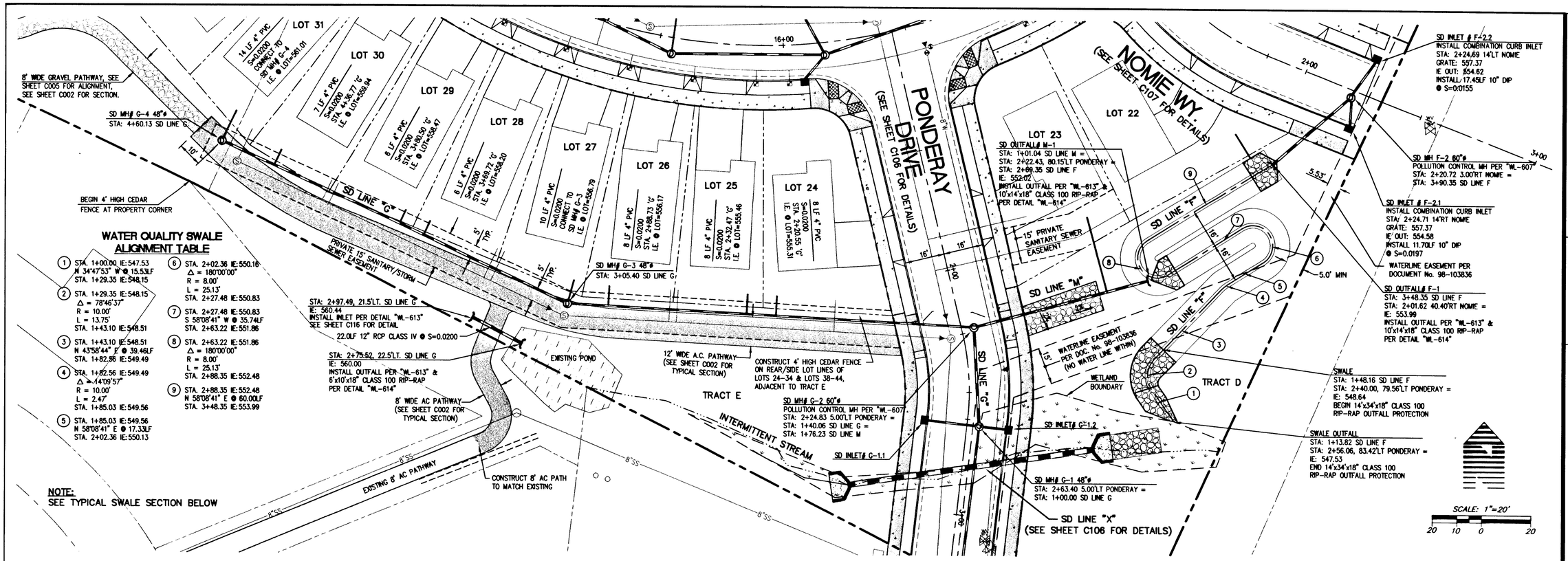

WATER QUALITY SWALE ALIGNMENT TABLE

1. STA. 1+00.00 IE:547.53 N 34°47'53" W @ 15.53LF STA. 1+29.35 IE:548.15
2. STA. 1+29.35 IE:548.15 Δ = 78°46'37" R = 10.00' L = 13.75' STA. 1+43.10 IE:548.51
3. STA. 1+43.10 IE:548.51 N 43°58'44" E @ 39.46LF STA. 1+82.56 IE:549.49
4. STA. 1+82.56 IE:549.49 Δ = 14°09'57" R = 10.00' L = 2.47' STA. 1+85.03 IE:549.56
5. STA. 1+85.03 IE:549.56 N 58°08'41" E @ 17.33LF STA. 2+02.36 IE:550.13
6. STA. 2+02.36 IE:550.16 Δ = 180°00'00" R = 8.00' L = 25.13' STA. 2+27.48 IE:550.83
7. STA. 2+27.48 IE:550.83 S 58°08'41" W @ 35.74LF STA. 2+63.22 IE:551.86
8. STA. 2+63.22 IE:551.86 Δ = 180°00'00" R = 8.00' L = 25.13' STA. 2+88.35 IE:552.48
9. STA. 2+88.35 IE:552.48 N 58°08'41" E @ 60.00LF STA. 3+48.35 IE:553.99

NOTE:
SEE TYPICAL SWALE SECTION BELOW

SWALE PLANTING NOTE:

WATER QUALITY SWALE SHALL BE PLANTED/SEEDED IN CONFORMANCE WITH THE CITY OF PORTLAND, B.E.S. MANUAL, SEPTEMBER, 2000.
HOBBS AND HOPKINS, PRO-TIME 840, NATIVE BIO-FILTER MIX (OR EQUAL)

BLUE WILDRYE	47.0%
NATIVE RED FESCUE	40.0%
TUFTED HAIRGRASS	10.0%
WESTERN MANNAGRASS	2.0%
AMERICAN SLOUGHGRASS	1.0%

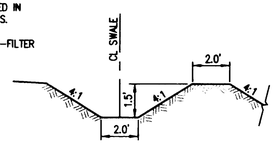

TYPICAL SWALE SECTION
N.T.S.

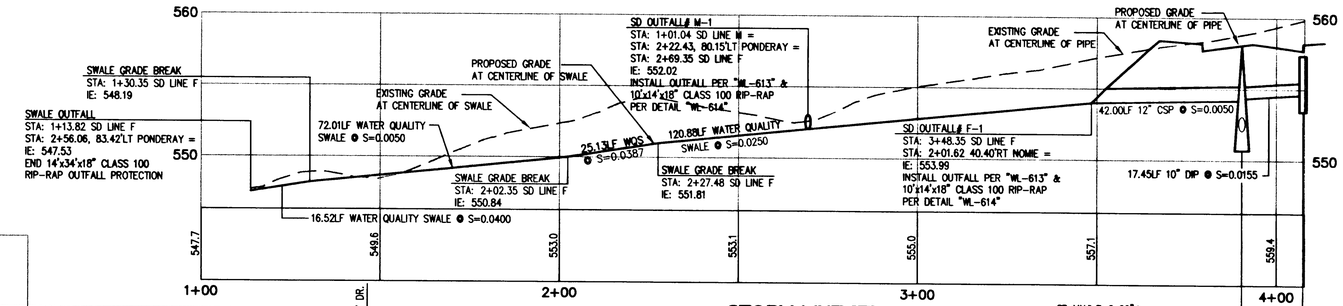

STORM LINE "F"
SCALE: 1'=20' HORZ. 1'=5' VERT.

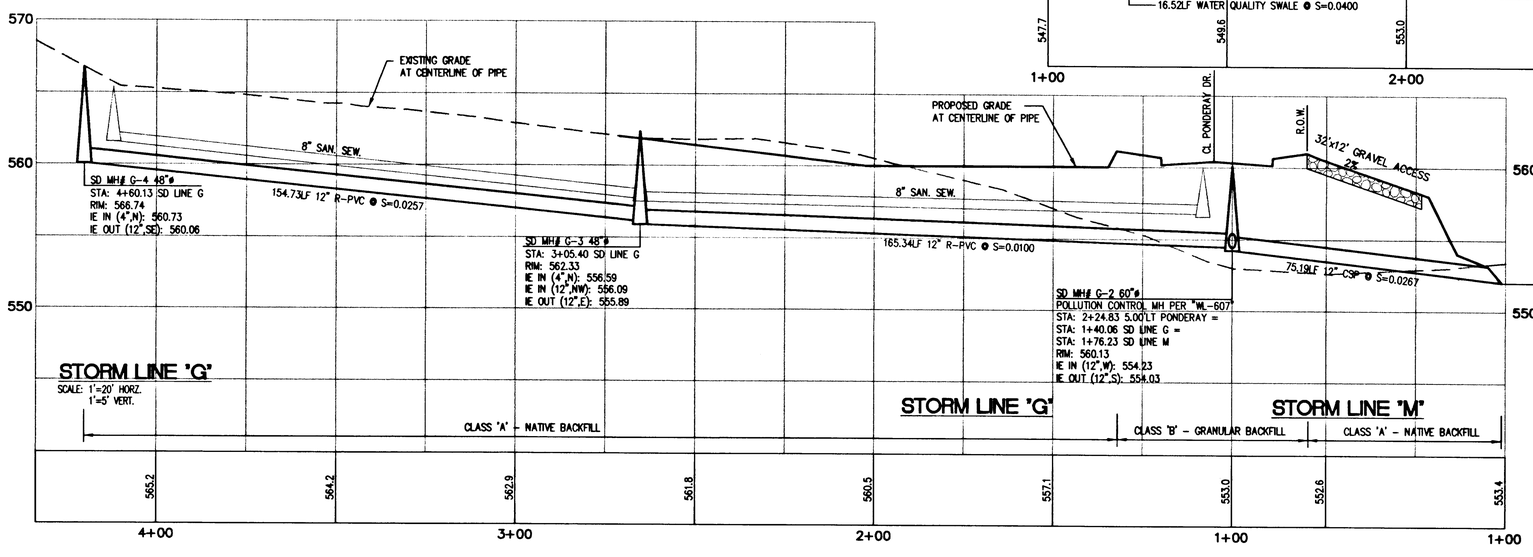

STORM LINE "G"
SCALE: 1'=20' HORZ. 1'=5' VERT.

STORM LINE "G" **STORM LINE "M"**

W R G DESIGN, INC.
5415 S.W. Westgate Dr., Suite 100
Portland, Oregon 97221
☎ 503 | 419-2600
FAX: 503 | 419-2500
PLANNERS ▪ ENGINEERS ▪ LANDSCAPE ARCHITECTS ▪ SURVEYORS

REGISTERED PROFESSIONAL ENGINEER 19,172 OREGON JULY 15, 1997 RANDALL S. DYER
EXPIRES: 12/31/03

STORM LINES 'F', 'G' and 'M'
MACKENZIE ROSE ESTATES - P.U.D.
WEST LINN, OREGON

J.T. SMITH COMPANIES
REAL ESTATE DEVELOPMENT
12400 SALMON RIVER WAY, SUITE 204
WEST LINN, OREGON 97068

RECORD DRAWING
11/26/2001
THESE RECORD DRAWINGS HAVE BEEN PREPARED, IN PART, ON THE BASIS OF INFORMATION COMPILED AND FURNISHED BY THE CONTRACTOR, REVISED CONSTRUCTION PLANS, AND FIELD OBSERVATIONS DURING CONSTRUCTION.

PROJECT NO. JTS007
DATE 01/25/01
DRAFTED D. LAVOIE
DESIGNED J. NEMEC
ENGINEER R. DYER
CHECKED

SHEET TITLE: STREET PLAN
SHEET NUMBER: C106A

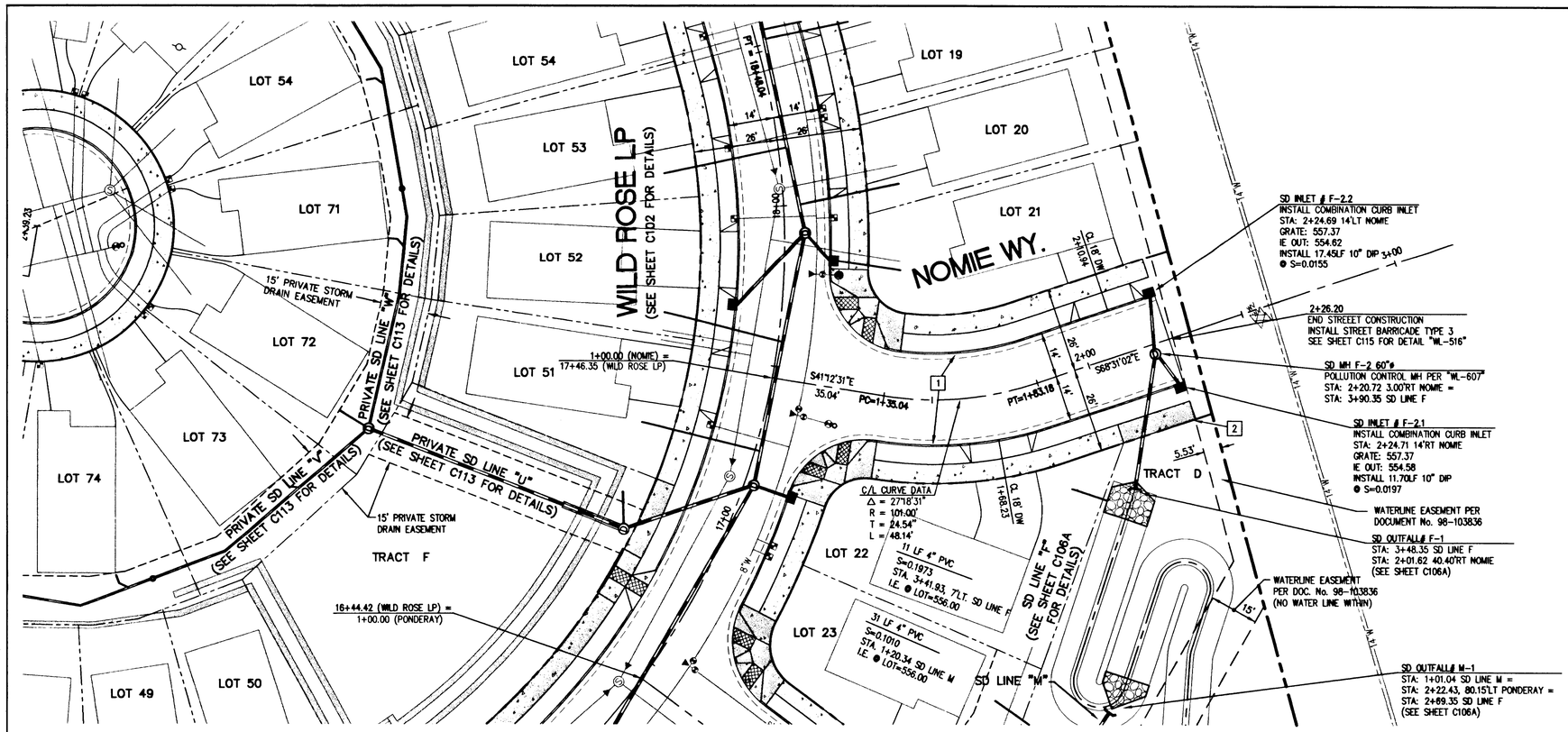

STREET CONSTRUCTION NOTES

1. CONSTRUCT CURB & GUTTER SEE SHEET C115 FOR DETAIL
2. CONSTRUCT 6' WIDE SIDEWALK FROM STA. 2+02.68, 20'RT. TO STA. 2+26.21, 20'RT.

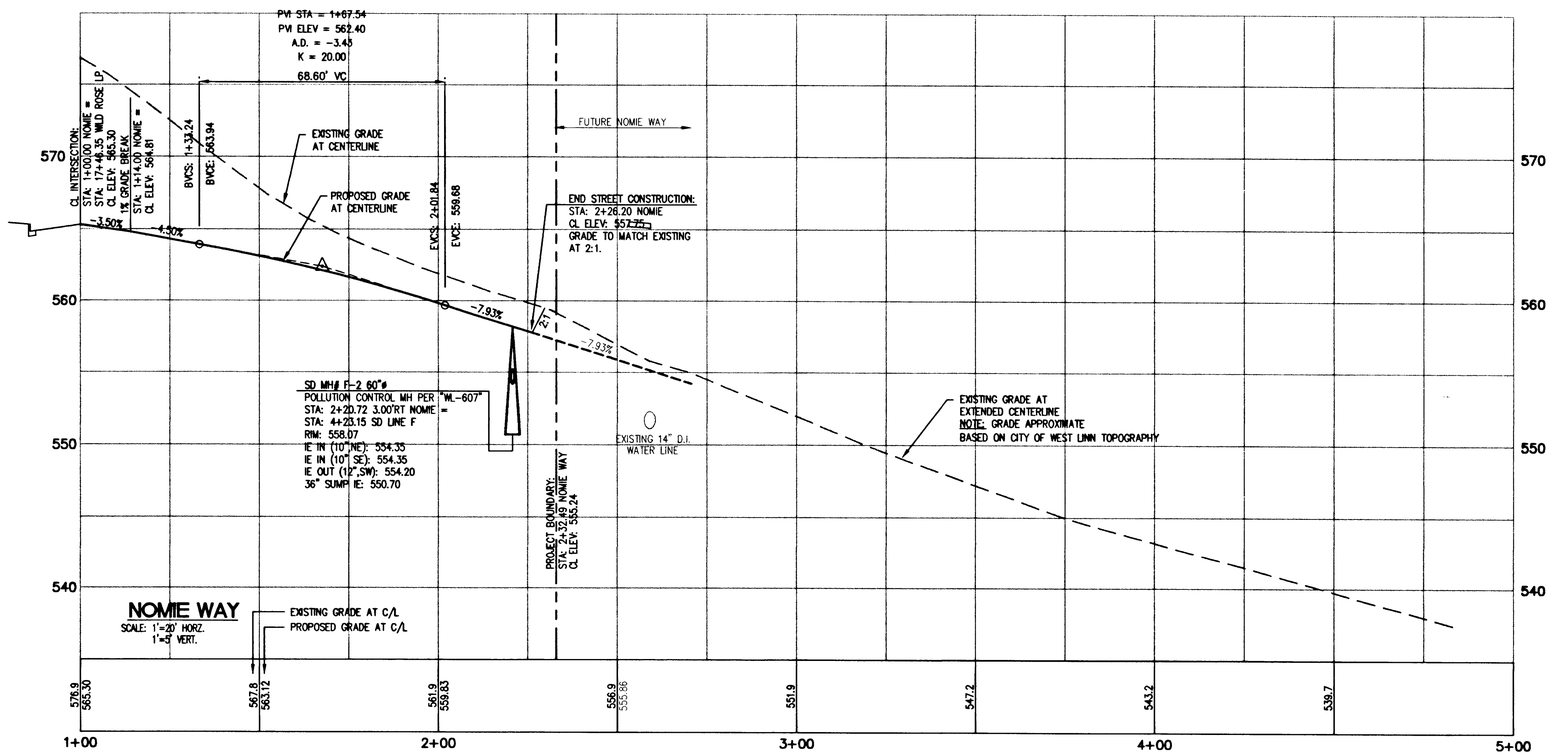

W R G DESIGN INC.
5415 S.W. Westgate Dr., Suite 100
Portland, Oregon 97221
☎ 503 | 419-2500 FAX: 503 | 419-2600
PLANNERS ▪ ENGINEERS ▪ LANDSCAPE ARCHITECTS ▪ SURVEYORS

REGISTERED PROFESSIONAL ENGINEER 19,172 OREGON JULY 15, 1997 RANDALL S. DYER
EXPIRES: 12/31/03

NOMIE WAY STREET PLAN + PROFILE
MACKENZIE ROSE ESTATES - P.U.D.
WEST LINN, OREGON

J.T. SMITH COMPANIES
REAL ESTATE DEVELOPMENT
22400 SALAMO ROAD, SUITE 204
WEST LINN, OREGON 97068

RECORD DRAWING
11/26/2001

THESE RECORD DRAWINGS HAVE BEEN PREPARED, IN PART, ON THE BASIS OF INFORMATION COMPILED AND FURNISHED BY THE CONTRACTOR, REVISED CONSTRUCTION PLANS, AND FIELD OBSERVATIONS DURING CONSTRUCTION.

PROJECT NO.	JTS007
DATE	01/25/01
DRAFTED	D. LAVOIE
DESIGNED	J. NEMEC
ENGINEER	R. DYER
CHECKED	
SHEET TITLE	STREET PLAN
SHEET NUMBER	C107

J:\DATA\JTS007\autocad\AS-BUILTS\AB-CD-BASE.dwg Wed Nov 21 11:44:49 2001 DGL

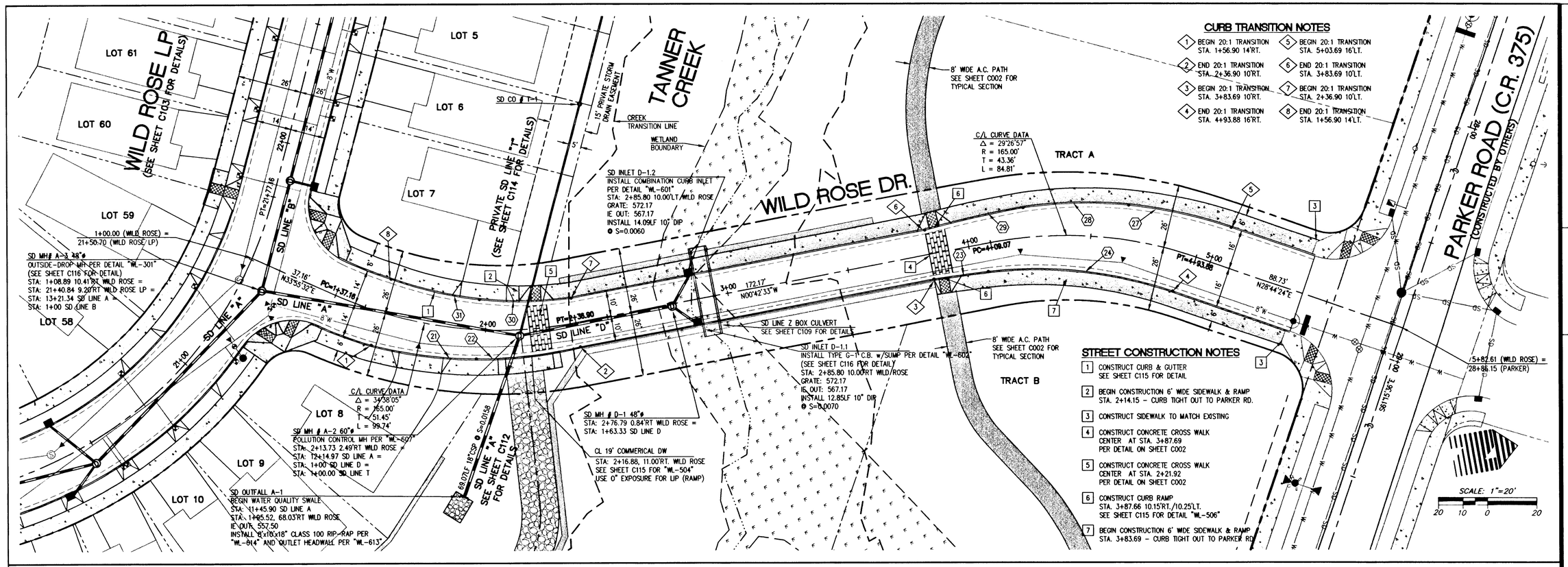

CURB TRANSITION NOTES

1. BEGIN 20:1 TRANSITION STA. 1+56.90 14'RT.
2. END 20:1 TRANSITION STA. 2+36.90 10'RT.
3. BEGIN 20:1 TRANSITION STA. 3+83.69 10'RT.
4. END 20:1 TRANSITION STA. 4+93.88 16'RT.
5. BEGIN 20:1 TRANSITION STA. 5+03.69 16'LT.
6. END 20:1 TRANSITION STA. 3+83.69 10'LT.
7. BEGIN 20:1 TRANSITION STA. 2+36.90 10'LT.
8. END 20:1 TRANSITION STA. 1+56.90 14'LT.

STREET CONSTRUCTION NOTES

1. CONSTRUCT CURB & GUTTER SEE SHEET C115 FOR DETAIL
2. BEGIN CONSTRUCTION 6' WIDE SIDEWALK & RAMP STA. 2+14.15 - CURB TIGHT OUT TO PARKER RD.
3. CONSTRUCT SIDEWALK TO MATCH EXISTING
4. CONSTRUCT CONCRETE CROSS WALK CENTER AT STA. 3+87.69 PER DETAIL ON SHEET C002
5. CONSTRUCT CONCRETE CROSS WALK CENTER AT STA. 2+21.92 PER DETAIL ON SHEET C002
6. CONSTRUCT CURB RAMP STA. 3+87.66 10.15'RT./10.25'LT. SEE SHEET C115 FOR DETAIL "WL-506"
7. BEGIN CONSTRUCTION 6' WIDE SIDEWALK & RAMP STA. 3+83.69 - CURB TIGHT OUT TO PARKER RD.

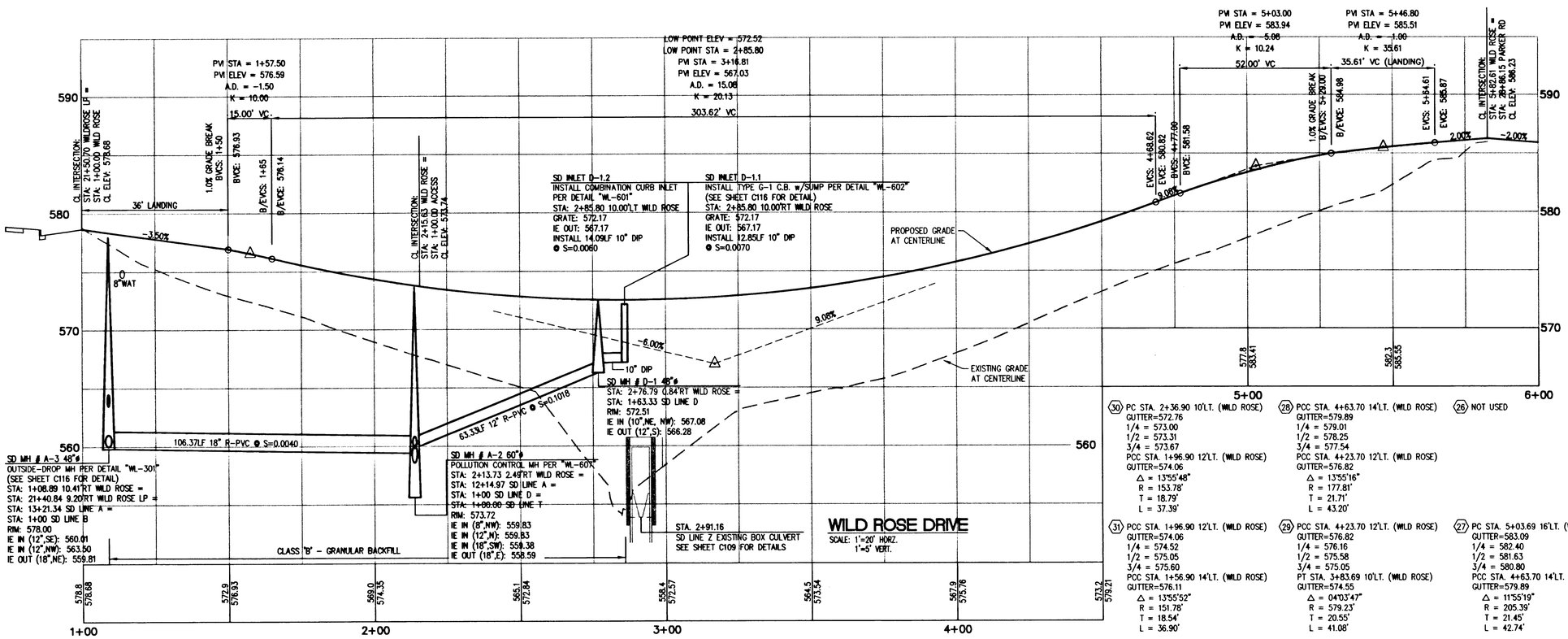

CURB RETURN DATA

(21) PCC STA. 1+56.90 14'RT. (WILD ROSE)
GUTTER=576.11
1/4 = 575.57
1/2 = 575.05
3/4 = 574.54
PCC STA. 1+96.90 12'RT. (WILD ROSE)
GUTTER=574.06
Δ = 13°55'12"
R = 177.81'
T = 21.71'
L = 43.20'

(22) PCC STA. 1+96.90 12'RT. (WILD ROSE)
GUTTER=574.06
1/4 = 573.64
1/2 = 573.30
3/4 = 573.02
PT STA. 2+36.90 10'RT. (WILD ROSE)
GUTTER=572.76
Δ = 13°55'14"
R = 175.81'
T = 21.46'
L = 42.71'

(23) PC STA. 3+83.69 10'RT. (WILD ROSE)
GUTTER=574.55
1/4 = 574.81
1/2 = 575.10
3/4 = 575.40
PCC STA. 4+05.99 11.16'RT. (WILD ROSE)
GUTTER=575.72
Δ = 02°15'30"
R = 566.68'
T = 11.17'
L = 22.34'

(24) PCC STA. 4+05.99 11.16'RT (WILD ROSE)
GUTTER=575.72
1/4 = 577.07
1/2 = 578.70
3/4 = 580.41
PT STA. 4+88.68 15.93'RT. (WILD ROSE)
GUTTER=582.01
Δ = 25°20'27"
R = 172.00'
T = 38.67'
L = 76.07'

(25) NOT USED

(26) NOT USED

(27) PC STA. 5+03.69 16'LT. (WILD ROSE)
GUTTER=583.09
1/4 = 582.40
1/2 = 581.63
3/4 = 580.80
PCC STA. 4+63.70 14'LT. (WILD ROSE)
GUTTER=579.89
Δ = 11°55'19"
R = 205.39'
T = 21.45'
L = 42.74'

(28) PCC STA. 4+63.70 14'LT. (WILD ROSE)
GUTTER=579.89
1/4 = 579.01
1/2 = 578.25
3/4 = 577.54
PCC STA. 4+23.70 12'LT. (WILD ROSE)
GUTTER=576.82
Δ = 13°55'16"
R = 177.81'
T = 21.71'
L = 43.20'

(29) PCC STA. 4+23.70 12'LT. (WILD ROSE)
GUTTER=576.82
1/4 = 576.16
1/2 = 575.58
3/4 = 575.05
PT STA. 3+83.69 10'LT. (WILD ROSE)
GUTTER=574.55
Δ = 04°03'47"
R = 579.23'
T = 20.55'
L = 41.08'

(30) PC STA. 2+36.90 10'LT. (WILD ROSE)
GUTTER=572.76
1/4 = 573.00
1/2 = 573.31
3/4 = 573.67
PCC STA. 1+96.90 12'LT. (WILD ROSE)
GUTTER=574.06
Δ = 13°55'48"
R = 153.78'
T = 18.79'
L = 37.39'

(31) PCC STA. 1+96.90 12'LT. (WILD ROSE)
GUTTER=574.06
1/4 = 574.52
1/2 = 575.05
3/4 = 575.60
PCC STA. 1+56.90 14'LT. (WILD ROSE)
GUTTER=576.11
Δ = 13°55'52"
R = 151.78'
T = 18.54'
L = 36.90'

W R G
D E S I G N I N G
5415 S.W. Westgate Dr., Suite 100
Portland, Oregon 97221
☎ 503 | 419-2500 FAX: 503 | 419-2600
PLANNERS • ENGINEERS • LANDSCAPE ARCHITECTS • SURVEYORS

REGISTERED PROFESSIONAL ENGINEER 19,172 OREGON JULY 15, 1997 RANDALL S. DYER
EXPIRES: 12/31/03

WILD ROSE DRIVE STREET PLAN + PROFILE
MACKENZIE ROSE ESTATES - P.U.D.
WEST LINN, OREGON

J. T. SMITH COMPANIES
REAL ESTATE DEVELOPMENT
22400 SALAMO ROAD, SUITE 204
WEST LINN, OREGON 97068

RECORD DRAWING
11/26/2001
THESE RECORD DRAWINGS HAVE BEEN PREPARED, IN PART, ON THE BASIS OF INFORMATION COMPILED AND FURNISHED BY THE CONTRACTOR, REVISED CONSTRUCTION PLANS, AND FIELD OBSERVATIONS DURING CONSTRUCTION.

PROJECT NO. JTS007

DATE	01/25/01
DRAFTED	D. LAVOIE
DESIGNED	J. NEMEC
ENGINEER	R. DYER
CHECKED	

SHEET TITLE: STREET PLAN
SHEET NUMBER: C108

J:\DATA\JTS007\AutocadVAS-BUILTS\AB-CD-BASE.dwg Wed Nov 21 11:31:45 2001 DGL

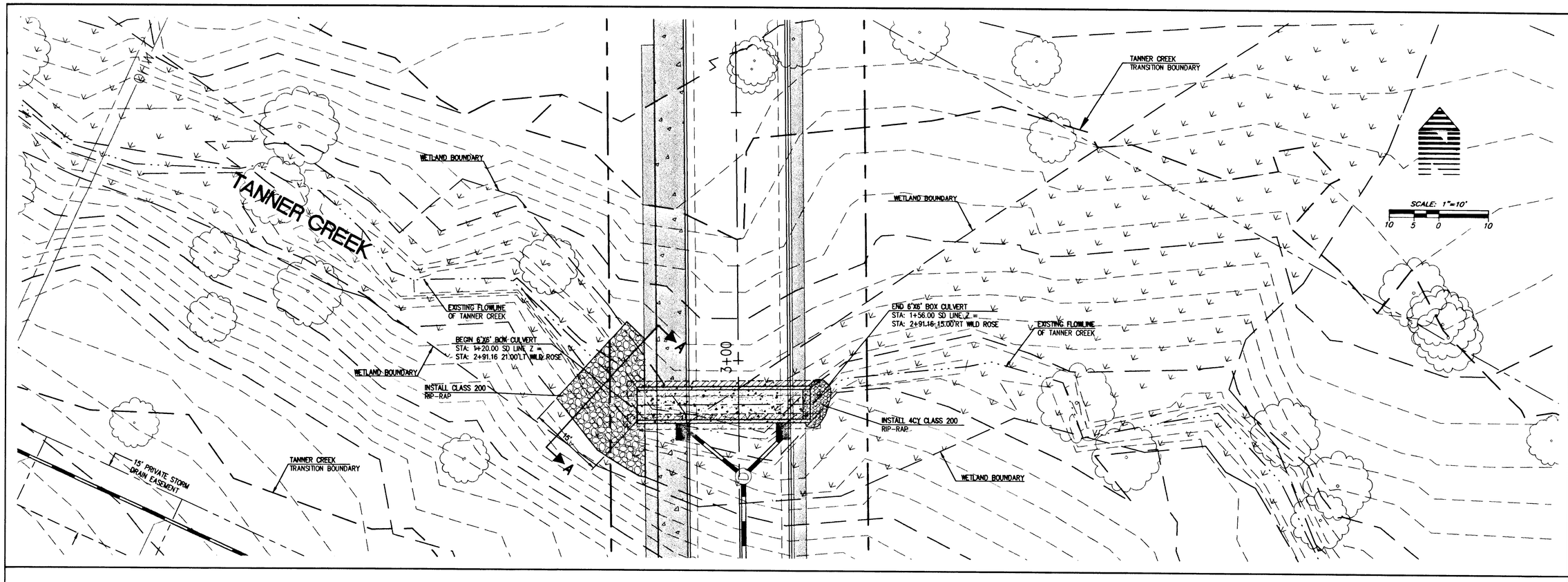

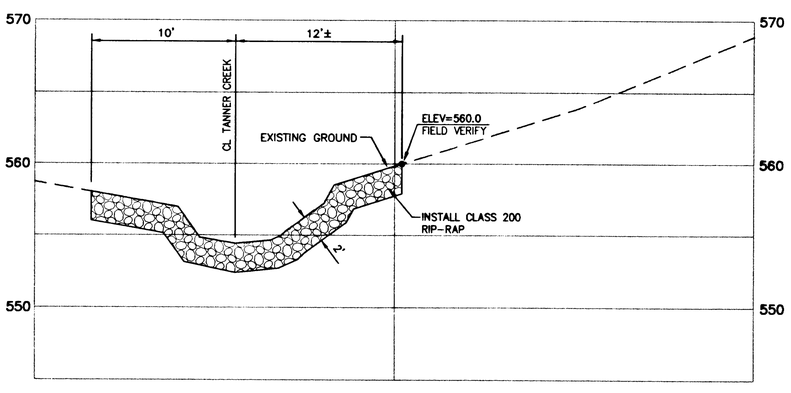

CROSS SECTION A-A

SCALE: 1" = 5'

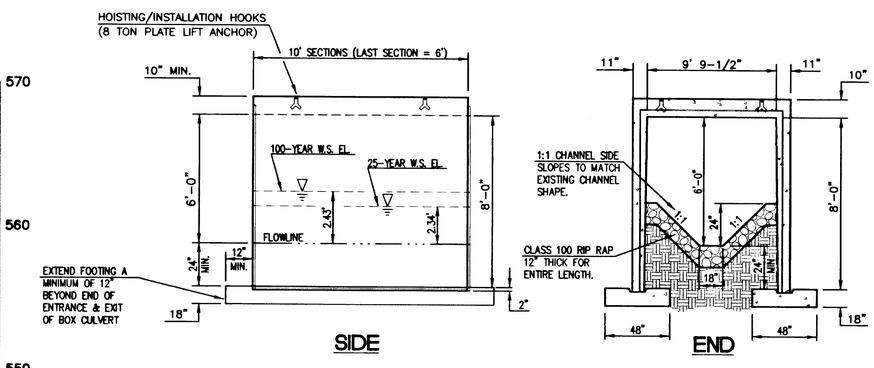

SIDE

END

BOX CULVERT DESIGN CRITERIA

1. BOX CULVERT SHALL BE CONSTRUCTED IN ACCORDANCE WITH DESIGN PREPARED AND STAMPED BY ALANH VANNARATH OF UTILITY VAULT, INC. DATED SEPTEMBER 8th, 2000.
2. CONCRETE: 28 DAY COMPRESSIVE STRENGTH f'c = 4500 psi
3. REBAR: ASTM A-615 GRADE 60
4. MESH: ASTM A-185 GRADE 65
5. STEEL: ASTM A-36 GRADE 36
6. GALVANIZING: ASTM A-123-89 & A-153-87 (HOT DIPPED)
7. STEEL DESIGN: AISC MANUAL OF STEEL CONSTRUCTION 9TH EDITION
8. CONCRETE DESIGN: ACI-318-95 BUILDING CODE ASTM C-857 "MINIMUM STRUCTURAL DESIGN LOADING FOR UNDERGROUND PRECAST CONCRETE UTILITY STRUCTURES"
9. LOADS: AASHTO HS-25 20 KIP WHEEL LOAD w/ 30% IMPACT (10" X 20" FOOTPRINT)
   AASHTO LIVE LOAD SURCHARGE (2' SOIL) TO 8' DEPTH
   EFFECTIVE SOIL PRESSURE BELOW WATER TABLE = 80 p.c.f.
   EFFECTIVE SOIL PRESSURE ABOVE WATER TABLE = 45 p.c.f.

SD-Z BOX CULVERT DETAIL

N.T.S.

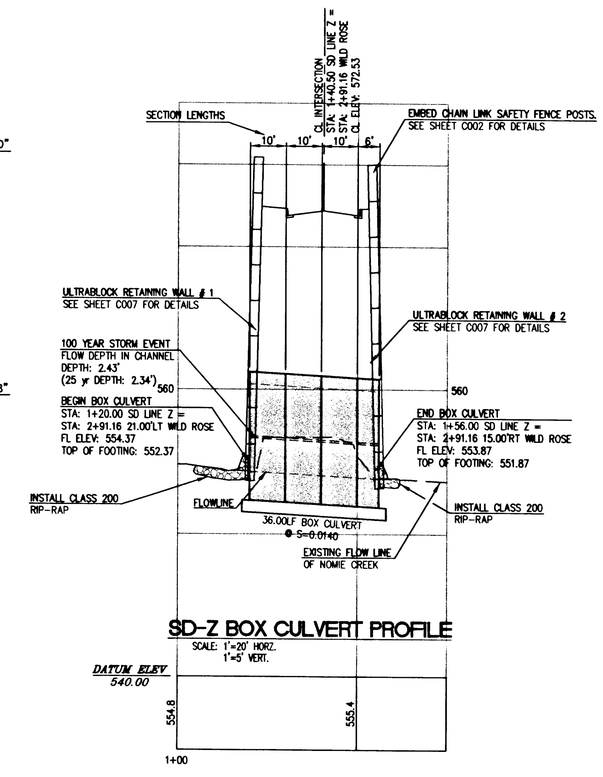

SD-Z BOX CULVERT PROFILE

SCALE: 1'=20' HORZ.
1'=5' VERT.

W R G DESIGN INC.
5415 S.W. Westgate Dr., Suite 100
Portland, Oregon 97221
☎ 503 | 419-2500 FAX: 503 | 419-2600
PLANNERS ▪ ENGINEERS ▪ LANDSCAPE ARCHITECTS ▪ SURVEYORS

REGISTERED PROFESSIONAL ENGINEER 19,172 OREGON JULY 15, 1997 RANDALL S. DYER
EXPIRES: 12/31/03

STORM LINE 'Z' BOX CULVERT PLAN AND PROFILE
MACKENZIE ROSE ESTATES - P.U.D.

WEST LINN, OREGON

J.T. SMITH COMPANIES
REAL ESTATE DEVELOPMENT
22420 SALAMO ROAD, SUITE 204
WEST LINN, OREGON 97068

RECORD DRAWING
11/26/2001

THESE RECORD DRAWINGS HAVE BEEN PREPARED, IN PART, ON THE BASIS OF INFORMATION COMPILED AND FURNISHED BY THE CONTRACTOR, REVISED CONSTRUCTION PLANS, AND FIELD OBSERVATIONS DURING CONSTRUCTION.

PROJECT NO. JTS007

DATE	01/25/01
DRAFTED	D. LAVOIE
DESIGNED	J NEMEC
ENGINEER	R. DYER
CHECKED	

SHEET TITLE: BOX CULVERT

SHEET NUMBER: C109

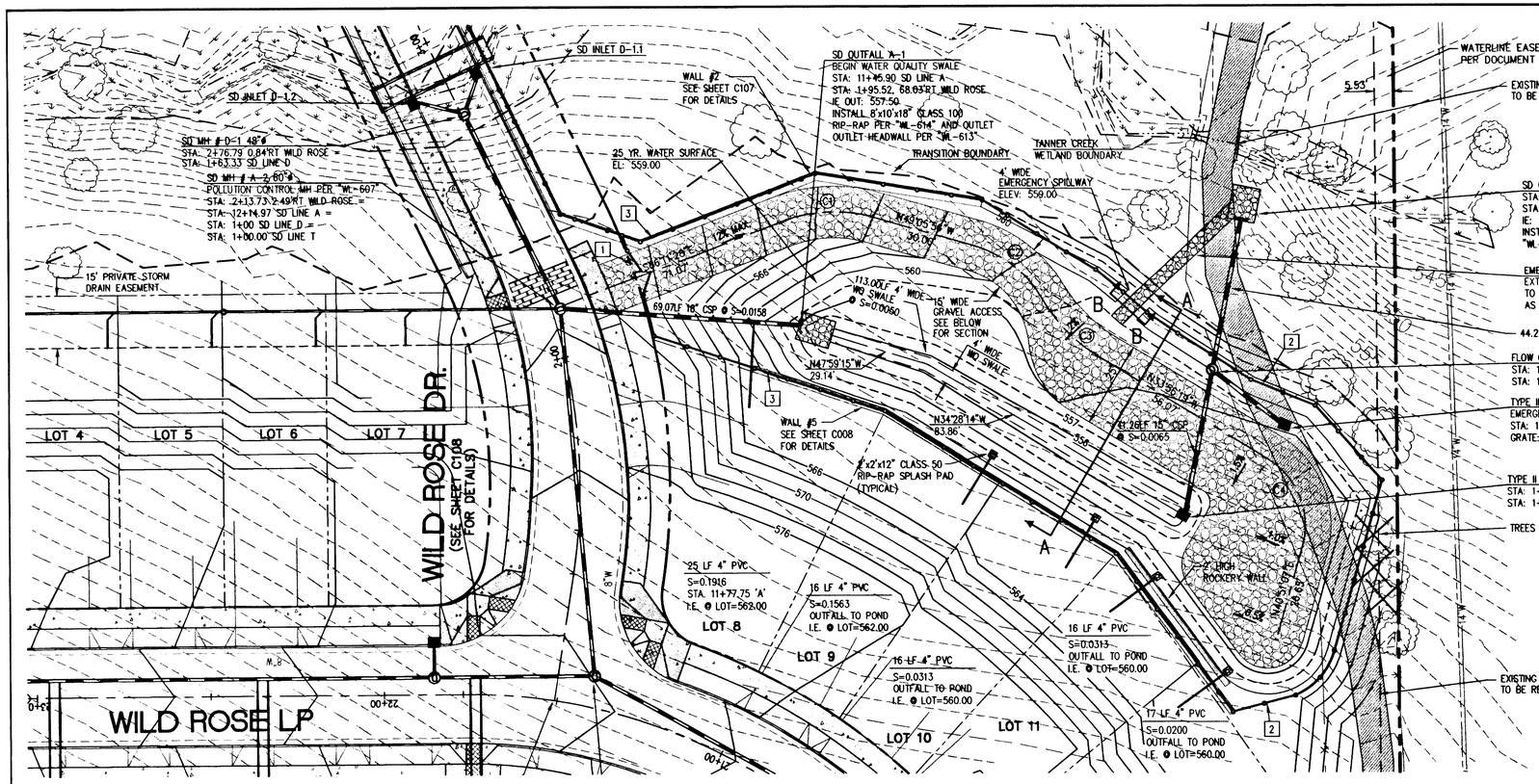

MAINTENANCE ACCESS CL RADIUS DATA

(C1) Δ = 37°05'32"
R = 42.50'
L = 27.51'

(C2) Δ = 44°14'05"
R = 32.50'
L = 25.09'

(C3) Δ = 29°04'29"
R = 50.00'
L = 25.37'

(C4) Δ = 74°47'26"
R = 22.50'
L = 29.37'

FENCE NOTES

1. INSTALL 2-6' SWING GATES - 48" HIGH
2. INSTALL 48" POLY COATED CHAIN LINK FENCE
3. INSTALL 48" HIGH SAFETY FENCE ON WALL SEE SHEET C008

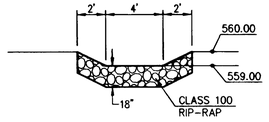

EMERGENCY SPILLWAY SECTION B-B

SCALE: 1"=5'

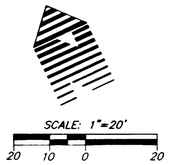

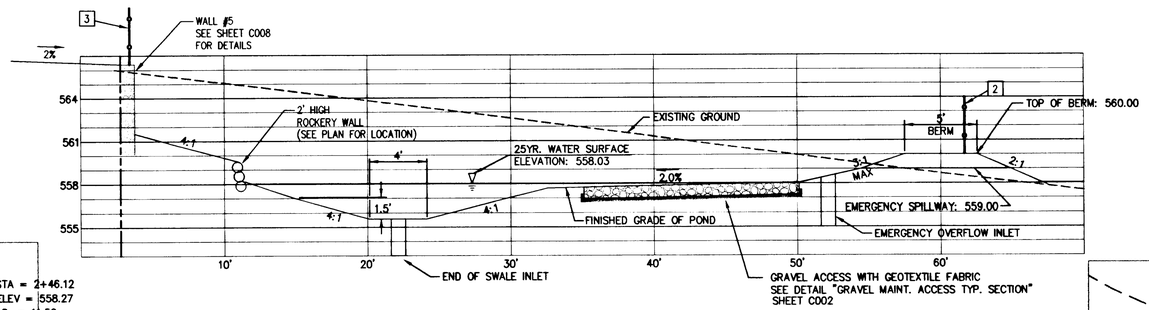

W.Q./DETENTION FACILITY-SECTION A-A

SCALE: 1"=5' HORZ.
1"=5' VERT.

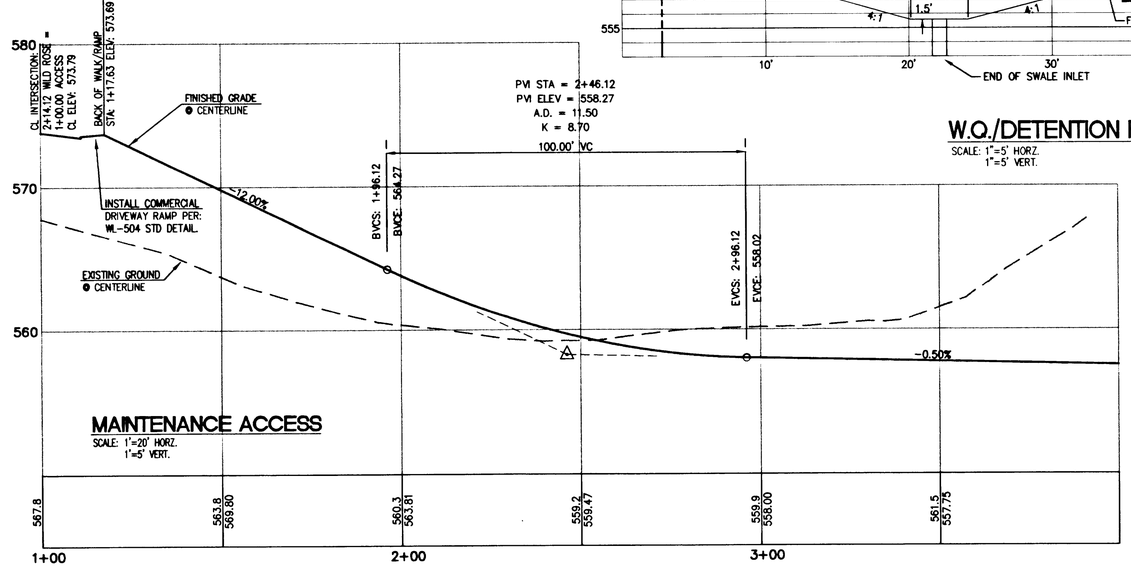

MAINTENANCE ACCESS

SCALE: 1"=20' HORZ.
1"=5' VERT.

PLANTING RECOMMENDATIONS

NOTE:
SEE SHEET L101 FOR SWALE & POND PLANTING

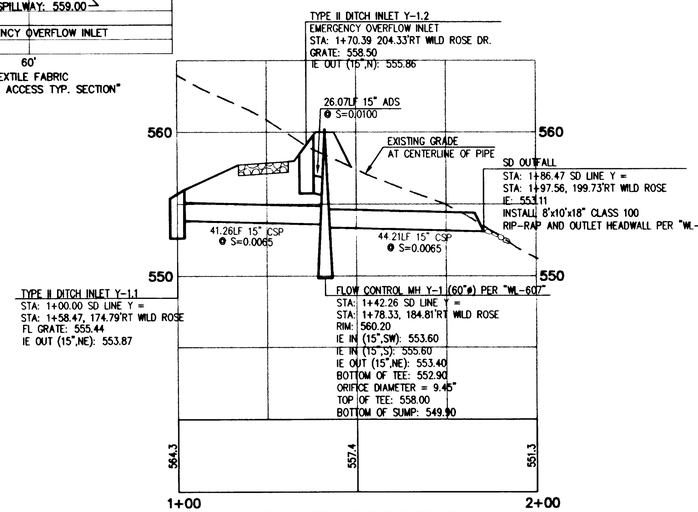

SD LINE 'Y' PROFILE

SCALE: 1"=20' HORZ.
1"=5' VERT.

WRG DESIGN INC.
5415 S.W. Westgate Dr., Suite 100
Portland, Oregon 97221
☎ 503 | 419-2500 FAX: 503 | 419-2600
PLANNERS • ENGINEERS • LANDSCAPE ARCHITECTS • SURVEYORS

REGISTERED PROFESSIONAL ENGINEER 19,172 OREGON JULY 15, 1997 RANDALL S. DYER
EXPIRES: 12/31/03

W.Q./DETENTION FACILITY PLAN AND PROFILES
MACKENZIE ROSE ESTATES - P.U.D.
WEST LINN, OREGON

J.T. SMITH COMPANIES
REAL ESTATE DEVELOPMENT
22400 SALAMO ROAD, SUITE 204
WEST LINN, OREGON 97068

RECORD DRAWING
11/26/2001
THESE RECORD DRAWINGS HAVE BEEN PREPARED, IN PART, ON THE BASIS OF INFORMATION COMPILED AND FURNISHED BY THE CONTRACTOR, REVISED CONSTRUCTION PLANS, AND FIELD OBSERVATIONS DURING CONSTRUCTION.

PROJECT NO. JTS007
DATE 01/25/01
DRAFTED D. LAVOIE
DESIGNED J NEMEC
ENGINEER R. DYER
CHECKED
SHEET TITLE WQ/DETENTION
SHEET NUMBER C112

J:\DATA\JTS007\Autocad\AS-BUILTS\A9-CD-BASE.dwg Wed Nov 21 11:35:46 2001 DGL

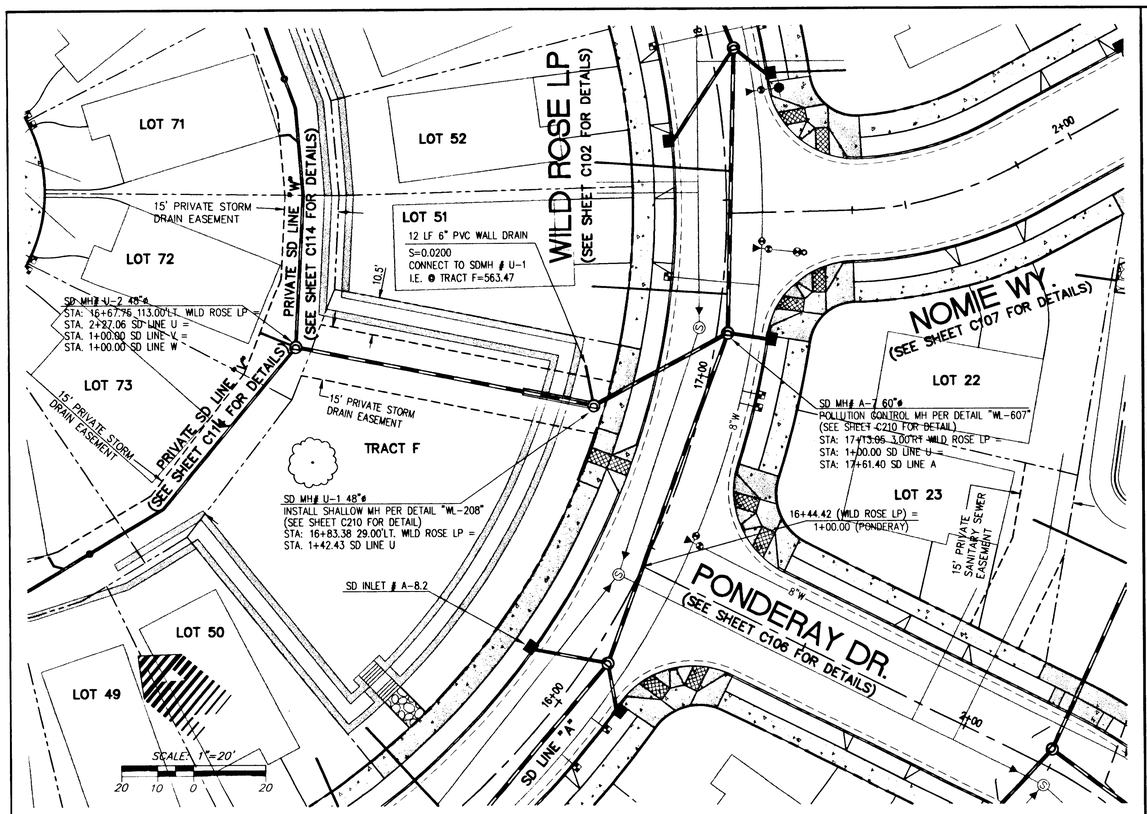

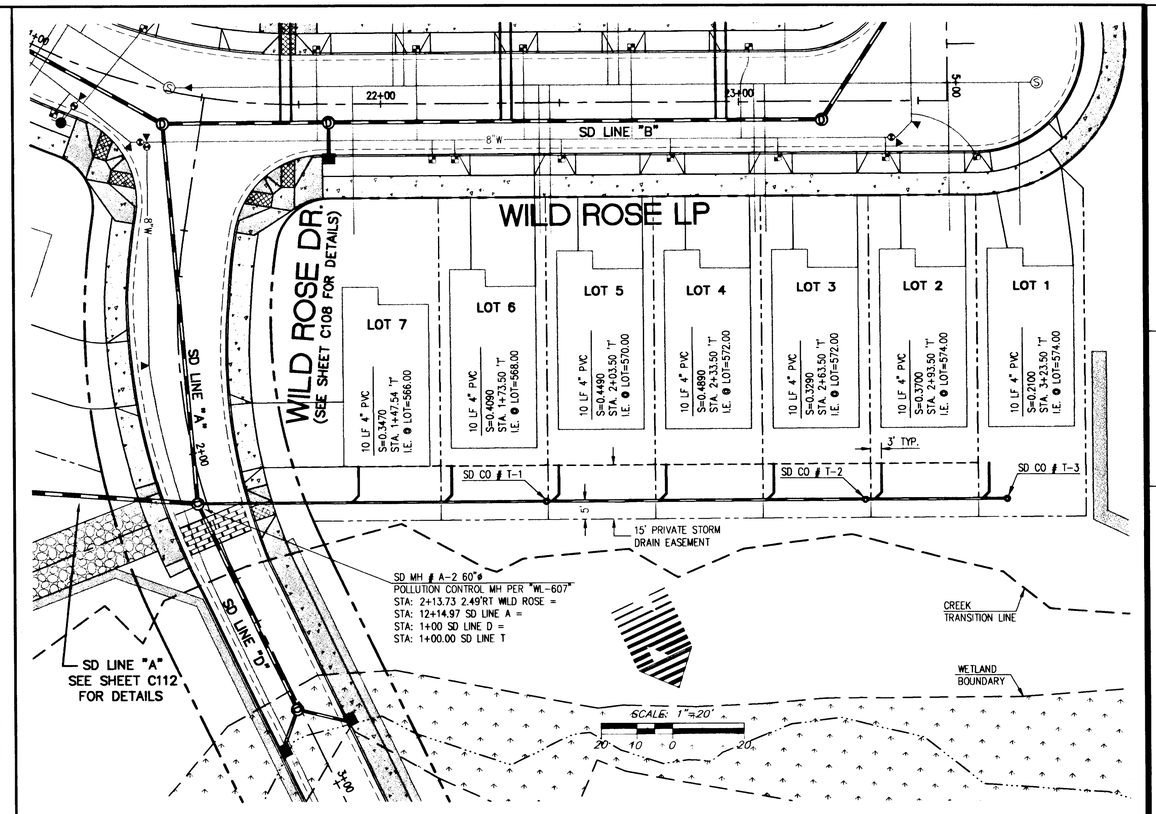

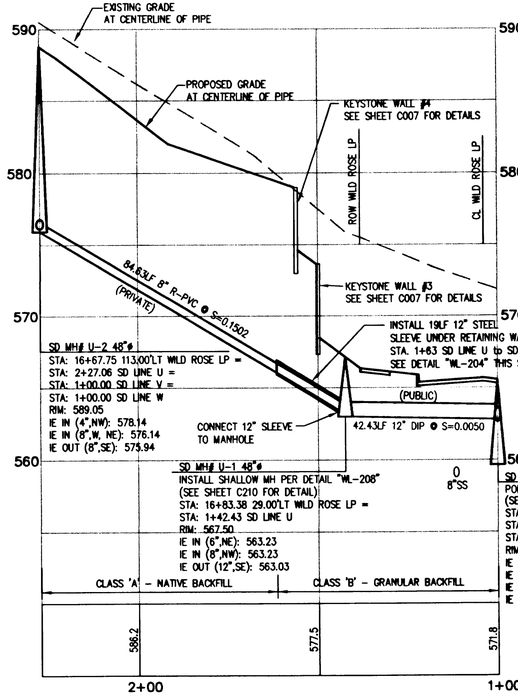

SD LINE U - PROFILE

SCALE: 1'=20' HORZ.
1'=5' VERT.

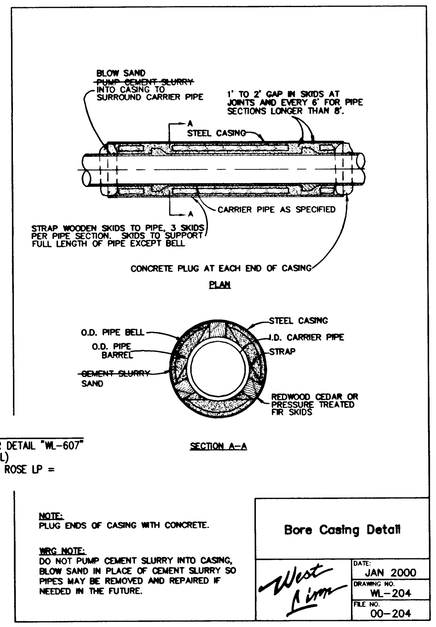

NOTE:
PLUG ENDS OF CASING WITH CONCRETE.

WRG NOTE:
DO NOT PUMP CEMENT SLURRY INTO CASING, BLOW SAND IN PLACE OF CEMENT SLURRY SO PIPES MAY BE REMOVED AND REPAIRED IF NEEDED IN THE FUTURE.

Bore Casing Detail

West Linn

DATE:	JAN 2000
DRAWING NO.	WL-204
FILE NO.	00-204

NOTE:
CLEANOUT RIM ELEVATIONS SHALL BE 12" ABOVE FINISHED GRADE.

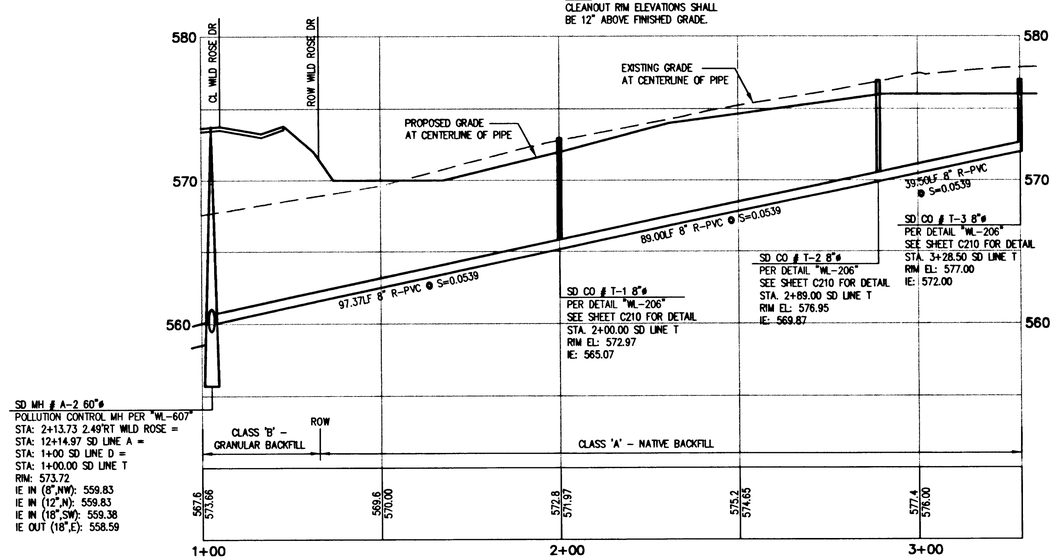

PRIVATE SD LINE T - PROFILE

SCALE: 1'=20' HORZ.
1'=5' VERT.

WRG DESIGN INC.
5415 S.W. Westgate Dr., Suite 100
Portland, Oregon 97221
☎ 503 | 419-2500 FAX: 503 | 419-2600
PLANNERS • ENGINEERS • LANDSCAPE ARCHITECTS • SURVEYORS

REGISTERED PROFESSIONAL ENGINEER 19,172 OREGON JULY 15, 1998 RANDALL S. DYER
EXPIRES: 12/31/03

PRIVATE STORM DRAIN LINES "T" + "U"
MACKENZIE ROSE ESTATES - P.U.D.
WEST LINN, OREGON

J.T. SMITH COMPANIES
REAL ESTATE DEVELOPMENT
22400 SALAMO ROAD, SUITE 154
WEST LINN, OREGON 97068

RECORD DRAWING
11/26/2001

THESE RECORD DRAWINGS HAVE BEEN PREPARED, IN PART, ON THE BASIS OF INFORMATION COMPILED AND FURNISHED BY THE CONTRACTOR, REVISED CONSTRUCTION PLANS, AND FIELD OBSERVATIONS DURING CONSTRUCTION.

PROJECT NO. JTS007

DATE	01/25/01
DRAFTED	D. LAVOIE
DESIGNED	J NEMEC
ENGINEER	R. DYER
CHECKED	

SHEET TITLE: PRIVATE STORM

SHEET NUMBER: C113

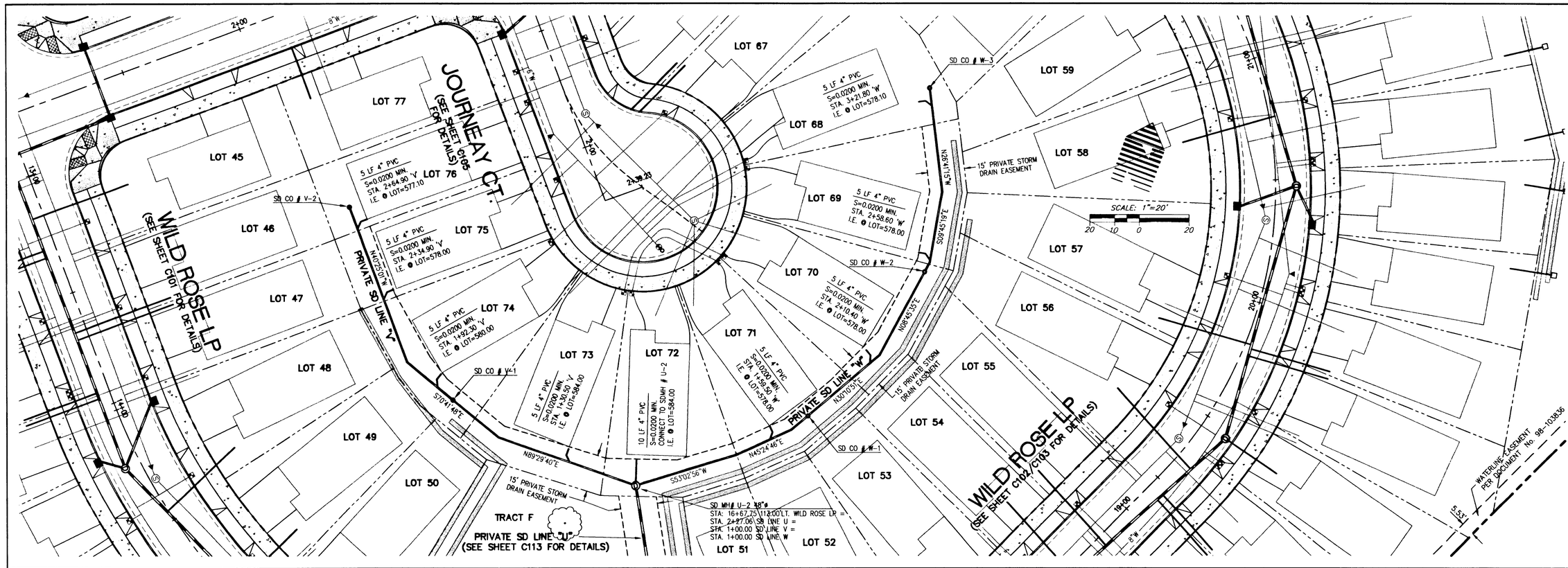

NOTE:
CLEANOUT RIM ELEVATIONS SHALL BE 12" ABOVE FINISHED GRADE.

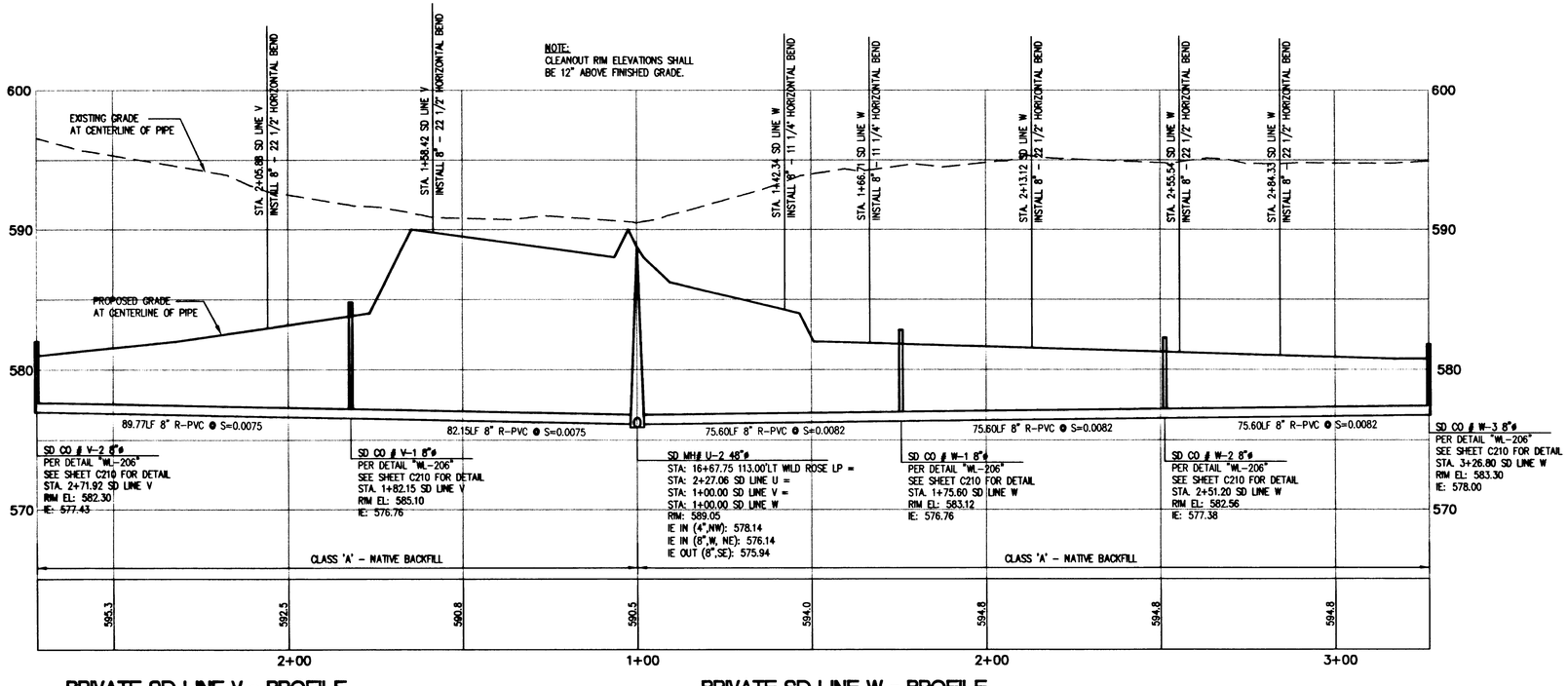

PRIVATE SD LINE V - PROFILE

SCALE: 1"=20' HORZ.
1"=5' VERT.

PRIVATE SD LINE W - PROFILE

SCALE: 1"=20' HORZ.
1"=5' VERT.

WRG DESIGN INC.
5415 S.W. Westgate Dr., Suite 100
Portland, Oregon 97221
☎ 503 | 419-2500 FAX: 503 | 419-2600
PLANNERS • ENGINEERS • LANDSCAPE ARCHITECTS • SURVEYORS

REGISTERED PROFESSIONAL ENGINEER 19,172 OREGON JULY 15, 1997 RANDALL S. DYER
EXPIRES: 12/31/03

WILD ROSE LOOP STREET PLAN + PROFILE
MACKENZIE ROSE ESTATES - P.U.D.

WEST LINN, OREGON

J.T. SMITH COMPANIES
REAL ESTATE DEVELOPMENT
22933 SALAMO ROAD, SUITE 204
WEST LINN, OREGON 97068

RECORD DRAWING
11/26/2001
THESE RECORD DRAWINGS HAVE BEEN PREPARED, IN PART, ON THE BASIS OF INFORMATION COMPILED AND FURNISHED BY THE CONTRACTOR, REVISED CONSTRUCTION PLANS, AND FIELD OBSERVATIONS DURING CONSTRUCTION.

PROJECT NO. JTS007
DATE 01/25/01
DRAFTED D. LAVOIE
DESIGNED J. NEMEC
ENGINEER R. DYER
CHECKED

SHEET TITLE
PRIVATE STORM

SHEET NUMBER
C114

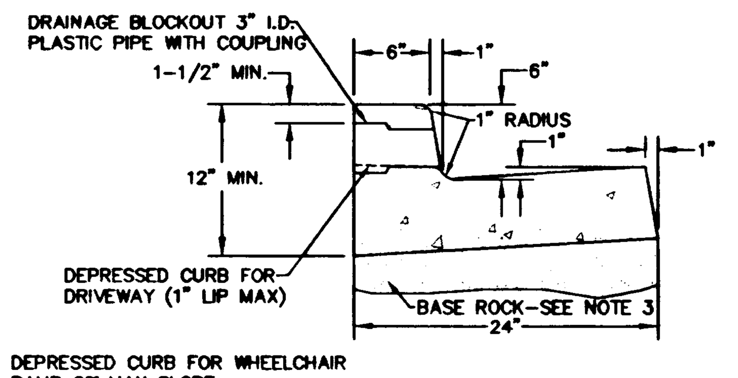

DEPRESSED CURB FOR WHEELCHAIR RAMP 2% MAX SLOPE

TYPICAL CURB & GUTTER

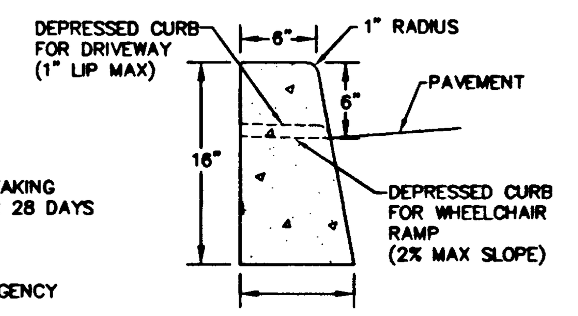

TYPICAL STRAIGHT CURB

NOTES:
1. CONCRETE SHALL HAVE A BREAKING STRENGTH OF 3300 PSI AFTER 28 DAYS
2. CONTRACTION JOINTS
   A) TO BE PROVIDED
      –AT EACH POINT OF TANGENCY
      –AT EACH COLD JOINT
      –AT EACH SIDE OF INLET STRUCTURES
      –AT BOTH SIDES OF AN APPROACH
   B) SPACING TO BE NOT MORE THAN 15 FEET
   C) THE DEPTH OF THE JOINT SHALL BE AT LEAST 1/3 OF THE THICKNESS OF CONCRETE
   D) EXPANSION JOINTS SHALL NOT BE USED
3. BASE ROCK – 1-1/2"-0", 95% COMPACTION ROCK SHALL BE TO SUBGRADE OF THE STREET SECTION OR 4" IN DEPTH, WHICHEVER IS GREATER
4. DRAINAGE BLOCK – 3" DIA. PLASTIC PIPE
   A) DRAINAGE ACCESS THROUGH EXISTING CURBS SHALL BE DONE BY:
      –CORE DRILLING
      –VERTICAL SAWCUT OF CURB 18" EACH SIDE OF DRAIN AND RE-POURED TO FULL DEPTH OF CURB
5. STAMP TOP OF CURB WITH "W" AT WATER SERVICE CROSSING AND "S" AT SANITARY LATERAL CROSSING

Typical Curbs

West Linn | DATE: JAN 2000 | DRAWING NO. WL-501 | FILE NO. 00-501

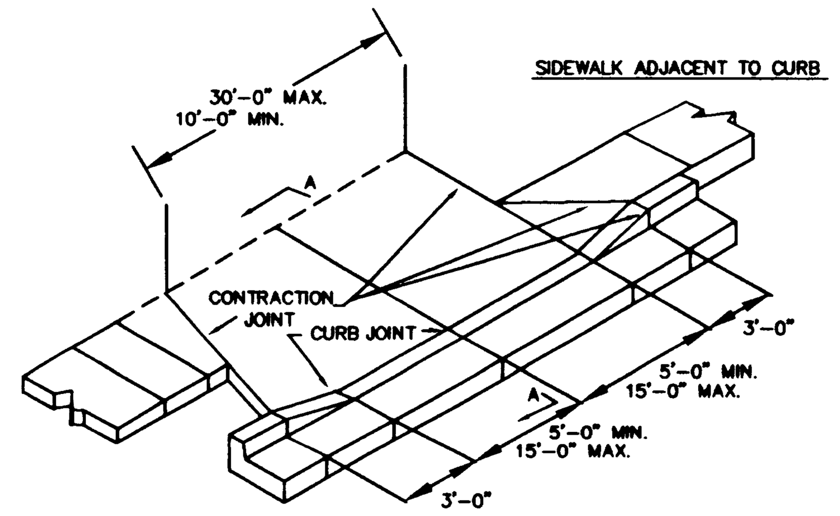

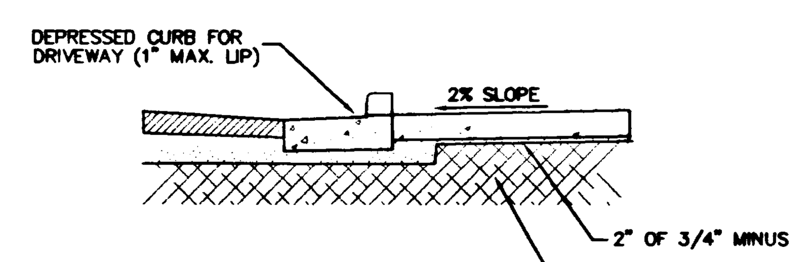

SECTION A–A

NOTES
1. CONCRETE SHALL HAVE A MINIMUM BREAKING STRENGTH OF 3300 PSI AFTER 28 DAYS, 6 SACK MIX.
2. CURB SHALL BE TROWELED JOINT WITH A MIN. 1/2" RADIUS ALONG BACK OF CURB.
3. DRIVEWAY SHALL BE A MINIMUM 6" THICK.

Residential Driveway

West Linn | DATE: JAN 2000 | DRAWING NO. WL-503 | FILE NO. 00-503

PLAN

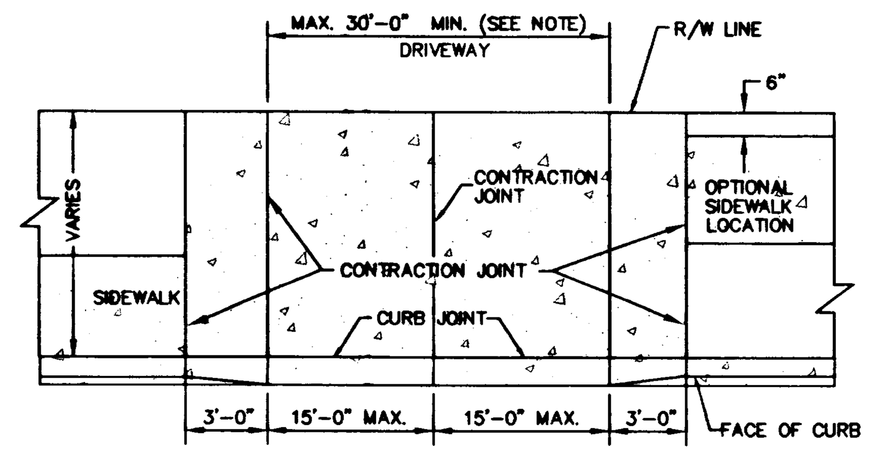

SIDEWALK ADJACENT TO CURB   SIDEWALK AWAY FROM CURB

NOTE: ONE-WAY TRAFFIC – MIN. 15' DRIVEWAY
TWO-WAY TRAFFIC – MIN. 24' DRIVEWAY

ELEVATION

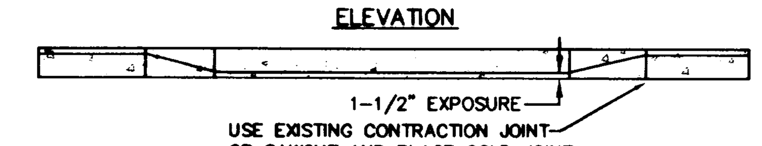

1-1/2" EXPOSURE
USE EXISTING CONTRACTION JOINT OR SAWCUT AND PLACE COLD JOINT

SECTION A–A

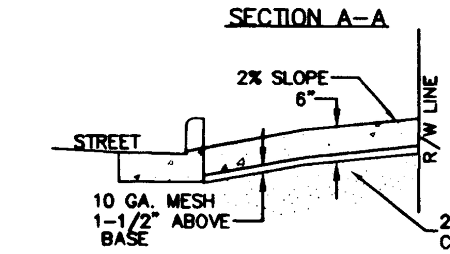

NOTES
1. CONCRETE SHALL HAVE A MINIMUM BREAKING STRENGTH OF 3300 PSI AFTER 28 DAYS, 6 SACK MIX.
2. CURB JOINT SHALL BE A TROWELED JOINT WITH A MIN. 1/2" RADIUS ALONG BACK OF CURB.
3. DRIVEWAY SHALL BE A MINIMUM 6" THICK.

Commercial Driveway

West Linn | DATE: JAN 2000 | DRAWING NO. WL-504 | FILE NO. 00-504

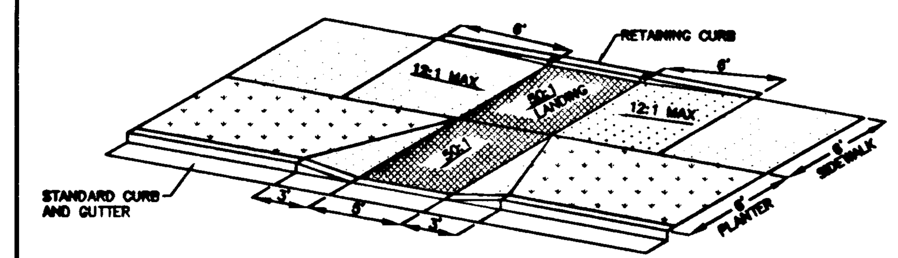

PARALLEL CURB RAMP

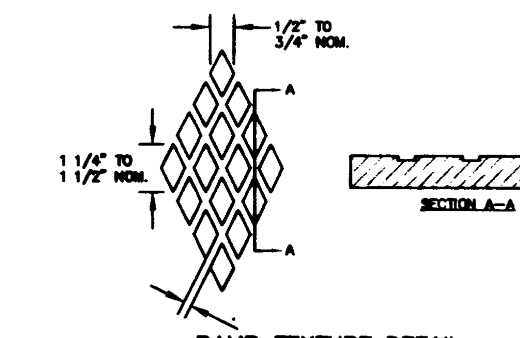

RAMP TEXTURE DETAIL

NOTES:
1. THE AMERICANS WITH DISABILITIES ACT" (ADA) REQUIRES THAT ACCESS RAMPS TO SIDEWALKS CONFORM TO ALL FEDERAL GUIDELINES. EXCEPTIONS TO THE REQUIREMENTS IN THIS DRAWING MUST BE APPROVED BY THE CITY ENGINEER AND MUST COMPLY WITH ADA.
2. NO ABOVE GROUND UTILITIES ARE PERMITTED WITHIN RAMP AREA.
3. LANDINGS SHALL BE PLACED AT THE TOP OF EACH RAMP. LANDING SLOPES SHALL NOT EXCEED 50:1 IN ANY DIRECTION. THE SLOPE OF THE SURFACING AT THE BOTTOM OF THE RAMP SHALL NOT EXCEED 20:1 FOR A DISTANCE OF 2' (SEE TYPICAL SECTION ABOVE).
4. MINIMUM LANDING DIMENSIONS SHALL BE 4' X 4'.
5. RAMP SURFACE SHALL BE TEXTURED WITH RAISED DIAMOND TEXTURE. TEXTURING SHALL BE DONE WITH AN EXPANDED METAL GRATE STAMPED INTO THE CONCRETE.
6. CONCRETE STRENGTH SHALL BE 3300 PSI.

Parallel Curb Ramp

West Linn | DATE: JAN 2000 | DRAWING NO. WL-506 | FILE NO. 00-506

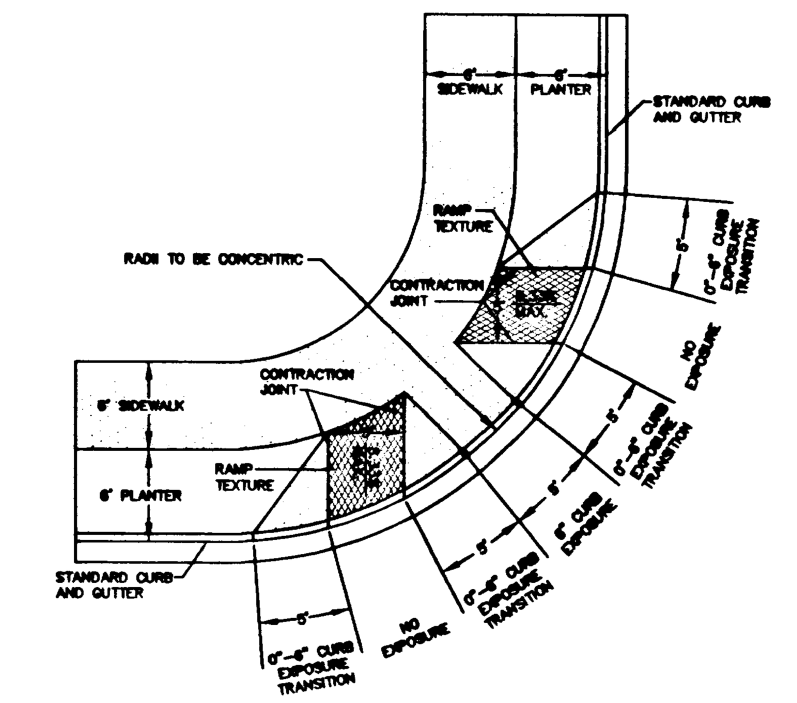

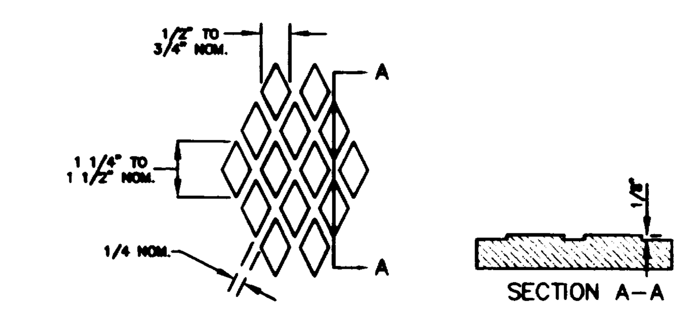

RAMP TEXTURE DETAIL

NOTES:
1. THE "AMERICANS WITH DISABILITIES ACT" (ADA) REQUIRES THAT ACCESS RAMPS TO SIDEWALKS CONFORM TO ALL FEDERAL GUIDE-LINES. EXCEPTIONS TO THE REQUIREMENTS IN THIS DRAWING MUST BE APPROVED BY THE CITY ENGINEER.
2. NO ABOVE GROUND UTILITIES ADRE PERMITTED WITHIN RAMP AREA.
3. RAMP SURFACE SHALL BE TEXTURED WITH RAISED DIAMOND TEXTURE. TEXTURING SHALL BE DONE WITH AN EXPANDED METAL GRATE STAMPED INTO THE CONCRETE.
4. CONCRETE STRENGTH SHALL BE 3300 PSI.
5. PLACE CONTRACTION JOINTS AS SHOWN ABOVE.
6. FOR INTERSECTING LOCAL STREETS USE DETAIL WL-507A.

Twin Curb Ramp

West Linn | DATE: JAN 2000 | DRAWING NO. WL-507B | FILE NO. 00-507B

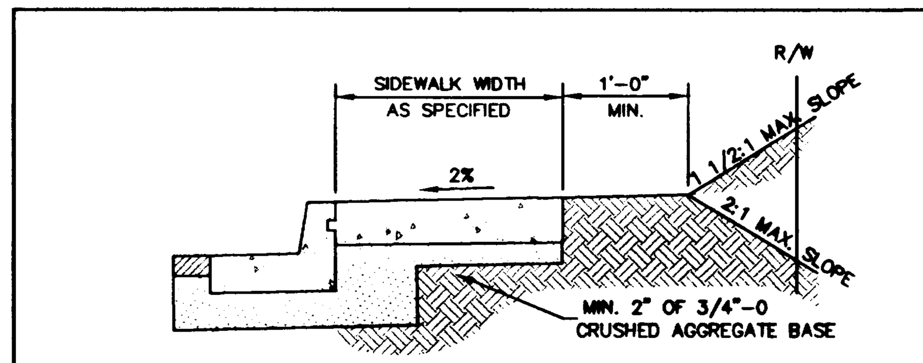

TYPICAL SIDEWALK ABUTTING CURB

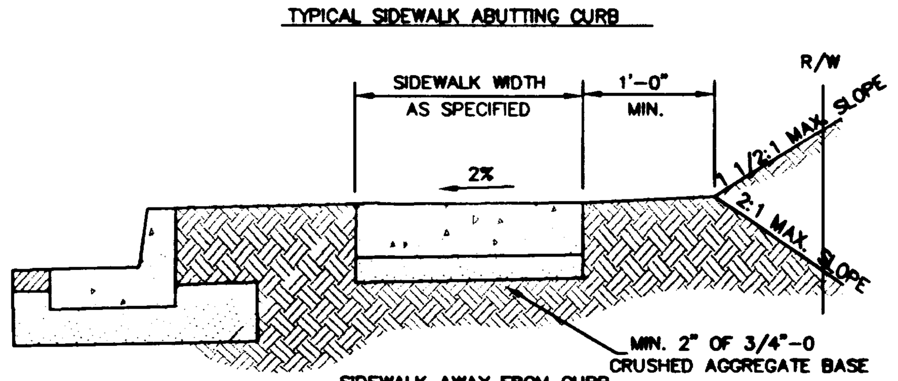

SIDEWALK AWAY FROM CURB

NOTES
1. CONCRETE SHALL BE 3300 PSI AT 28 DAYS, 6 SACK MIX, SLUMP RANGE OF 1 1/2" TO 3".
2. PANEL LENGTHS SHALL BE EQUAL TO THE SIDEWALK WIDTH, BUT MAY BE ADJUSTED WITH THE CITY ENGINEER'S APPROVAL.
3. CONTRACTION JOINTS (1/3RD OF THE THICKNESS OF CONCRETE) SHALL BE PLACED EVERY THIRD PANEL, WITH A MAX. SPACING OF 18 FEET. JOINTS SHALL ALSO BE PLACED AT THE SIDES OF DRIVEWAY APPROACHES, UTILITY VAULTS, AND WHEELCHAIR RAMPS.
4. A CURING COMPOUND SHALL BE USED. WHITE REFLECTIVE SHEETING SHALL BE USED IN CASE OF RAIN.
5. FOR SIDEWALKS ADJACENT TO THE CURB AND POURED AT THE SAME TIME AS THE CURB, THE JOINT BETWEEN THEM SHALL BE A TROWELED JOINT WITH A MIN. 1/2" RADIUS.
6. THE SIDEWALK SHALL HAVE A MIN. THICKNESS OF 6" IF MOUNTABLE CURB IS USED OR IF THE SIDEWALK IS INTENDED AS A PORTION OF THE DRIVEWAY. OTHERWISE, THE SIDEWALK SHALL HAVE A MIN. THICKNESS OF 4".
7. DRAIN BLOCKOUTS IN THE CURB SHALL BE EXTENDED TO THE BACK OF THE SIDEWALK WITH A 3" DIA. PLASTIC PIPE AT A 2% SLOPE. A CONTRACTION JOINT SHALL BE PLACED OVER THE PIPE.

Concrete Sidewalk Cross Section

West Linn | DATE: JAN 2000 | DRAWING NO. WL-508 | FILE NO. 00-508

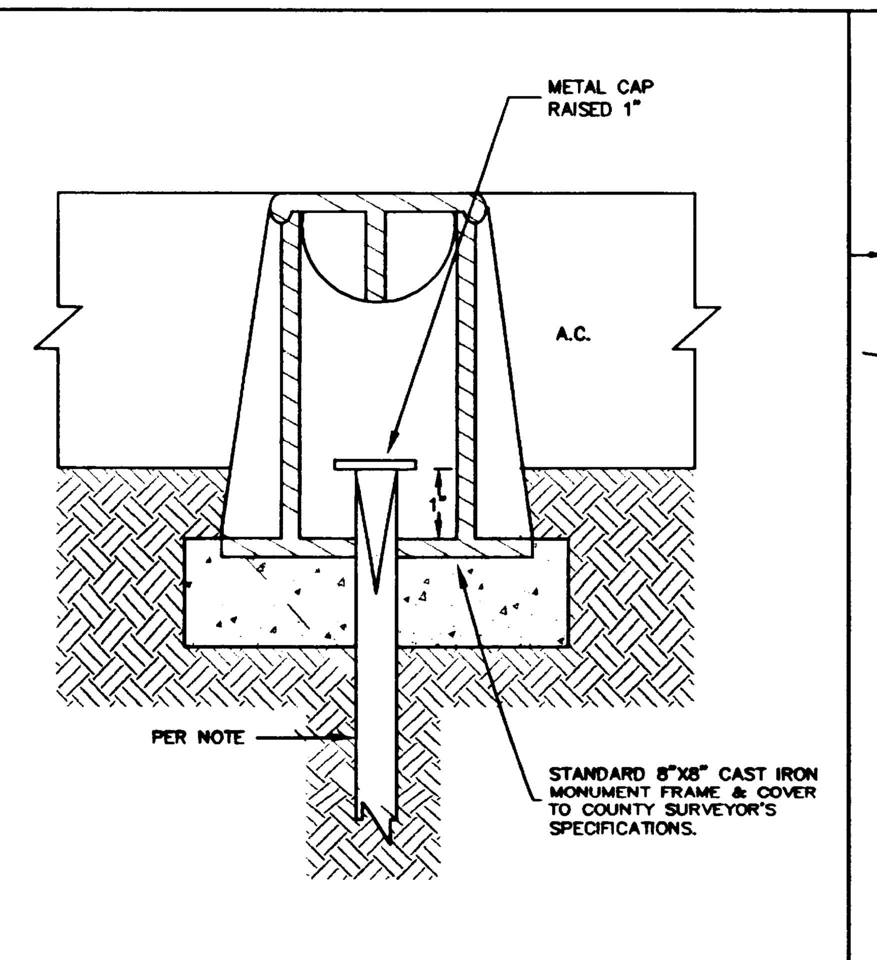

NOTES: ALL MONUMENTS SHALL USE EITHER 5/8" DIA.X 30" LONG IRON ROD OR 3/4" DIA.X 30" LONG IRON PIPE.

ALL MONUMENTS SHALL BE IN ACCORDANCE WITH ORS 209.250(4).

CONCRETE SHALL BE CLASS 3300.

FRAME AND COVER SHALL BE CAST IRON OR ALUMINUM.

COVER SHALL HAVE "MONUMENT" CAST INTO TOP.

Centerline Survey Monuments

West Linn | DATE: JAN 2000 | DRAWING NO. WL-513 | FILE NO. 00-513

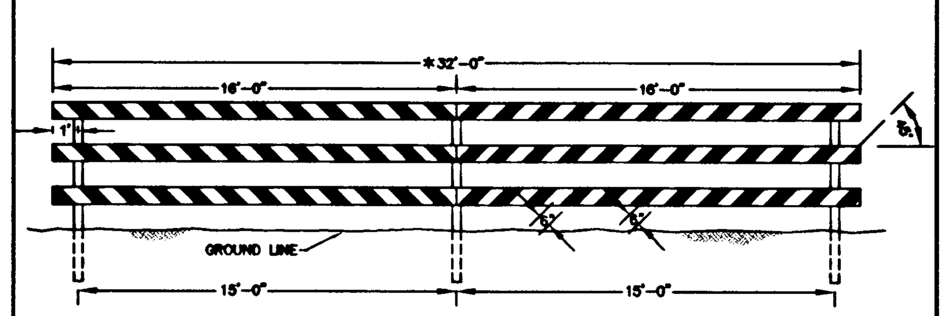

ELEVATION

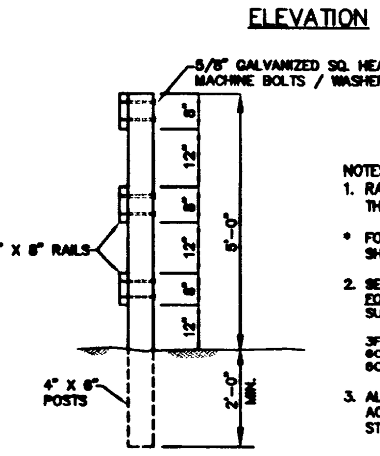

END VIEW

NOTES:
1. RAILS TO BE PAINTED RED WITH WHITE STRIPES. THE WHITE STRIPES SHALL BE REFLECTORIZED
* FOR WIDER APPLICATIONS, MULTIPLE SECTIONS AS SHOWN SHALL BE USED.
2. SEE MANUAL ON UNIFORM TRAFFIC CONTROL DEVICES FOR STREETS AND HIGHWAYS AND THE OREGON SUPPLEMENT.
   3F-1 BARRICADES
   6C-8 BARRICADE DESIGN
   6C-9 BARRICADE APPLICATION
3. ALL MATERIALS AND WORKMANSHIP SHALL BE IN ACCORDANCE WITH THE CURRENT STATE OF OREGON STANDARD SPECIFICATIONS FOR HIGHWAY CONSTRUCTION.

Street Barricade Type 3

West Linn | DATE: JAN 2000 | DRAWING NO. WL-516 | FILE NO. 00-516

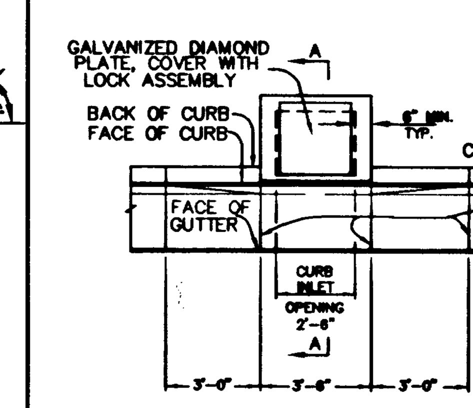

PLAN VIEW

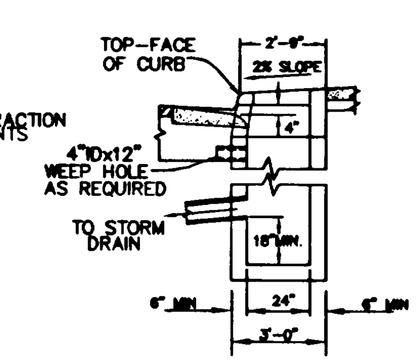

SECTION A–A

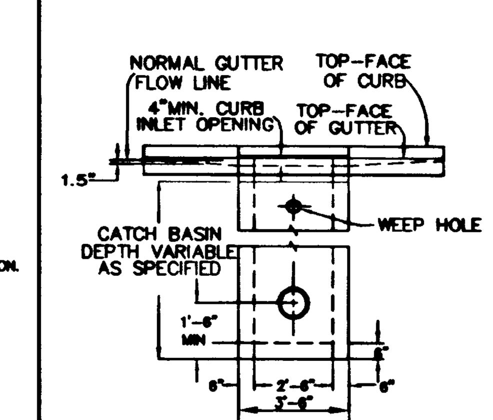

FRONT VIEW

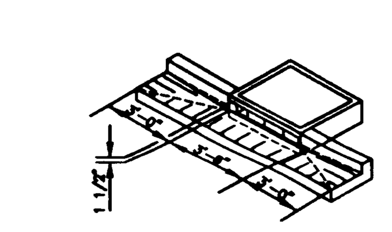

PERSPECTIVE VIEW SHOWING DEPRESSED GUTTER AT CURB INLET

NOTES:
1. ALL FABRICATED METAL PARTS SHALL BE HOT-DIPPED GALVANIZED AFTER FABRICATION.
2. CONCRETE SHALL BE CLASS 3000.
3. CURB INLET BASE MAY BE PRECAST OR CAST-IN-PLACE.
4. FOR SLOPES OF 5% OR GREATER, USE DWG. WL-601.

Gutter Inlet 2 1/2 A

West Linn | DATE: JAN 2000 | DRAWING NO. WL-600 | FILE NO. 00-600

MANHOLE RIMS AND COVERS AS MANUFACTURED BY HERN IRON WORKS, COEUR D' ALENE, IDAHO. COVER PATTERN NO. 2312, RIM PATTERN NO. 2311 OR APPROVED EQUAL.

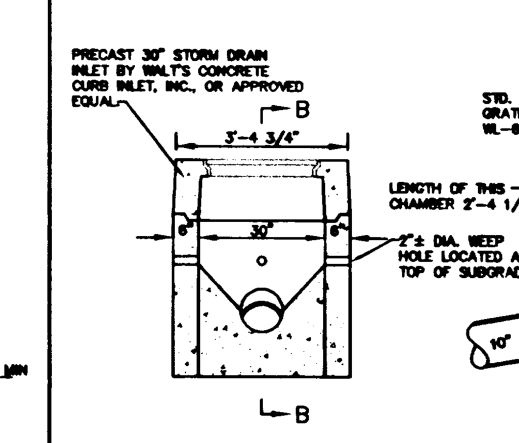

SECTION A–A

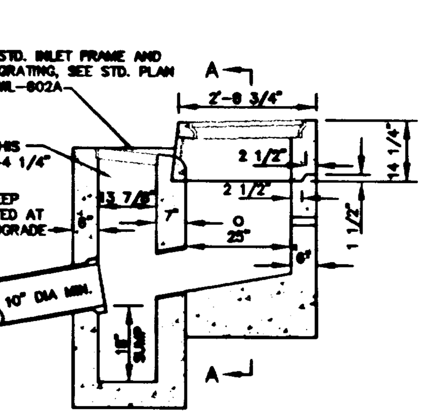

SECTION B–B

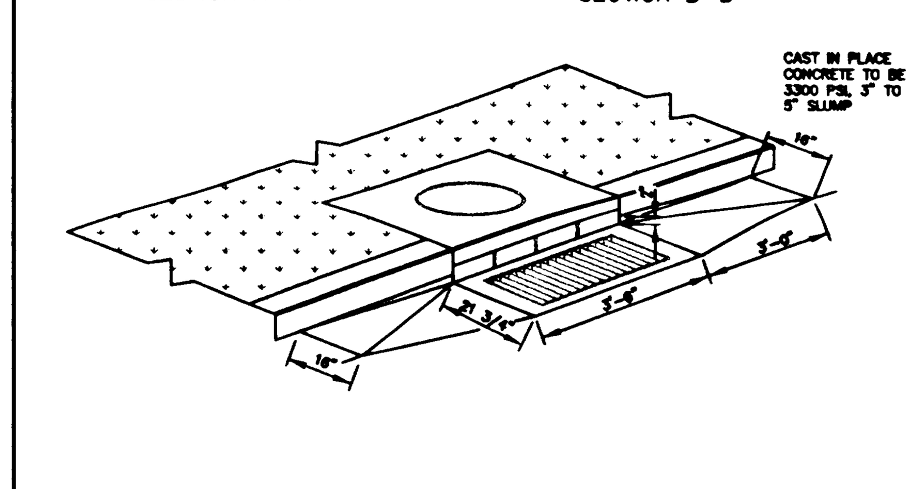

Combination Curb Inlet

West Linn | DATE: JAN 2000 | DRAWING NO. WL-601 | FILE NO. 00-601

STREET and STORM DRAIN DETAILS
MACKENZIE ROSE ESTATES - P.U.D.
WEST LINN, OREGON

W R G DESIGN INC.
5415 S.W. Westgate Dr., Suite 100
Portland, Oregon 97221
503|419-2500 FAX: 503|419-2600
PLANNERS ▪ ENGINEERS ▪ LANDSCAPE ARCHITECTS ▪ SURVEYORS

REGISTERED PROFESSIONAL ENGINEER 19,172 OREGON JULY 15, 1997 RANDALL S. DYER
EXPIRES: 12/31/03

J.T. SMITH COMPANIES
REAL ESTATE DEVELOPMENT
22400 SALAMO ROAD, SUITE 204
WEST LINN, OREGON 97068

RECORD DRAWING
11/26/2001
THESE RECORD DRAWINGS HAVE BEEN PREPARED, IN PART, ON THE BASIS OF INFORMATION COMPILED AND FURNISHED BY THE CONTRACTOR, REVISED CONSTRUCTION PLANS, AND FIELD OBSERVATIONS DURING CONSTRUCTION.

PROJECT NO.
JTS007

DATE	01/25/01
DRAFTED	D. LAVOIE
DESIGNED	J NEMEC
ENGINEER	R. DYER
CHECKED	

SHEET TITLE
STREET/STORM DETAILS
SHEET NUMBER
C115

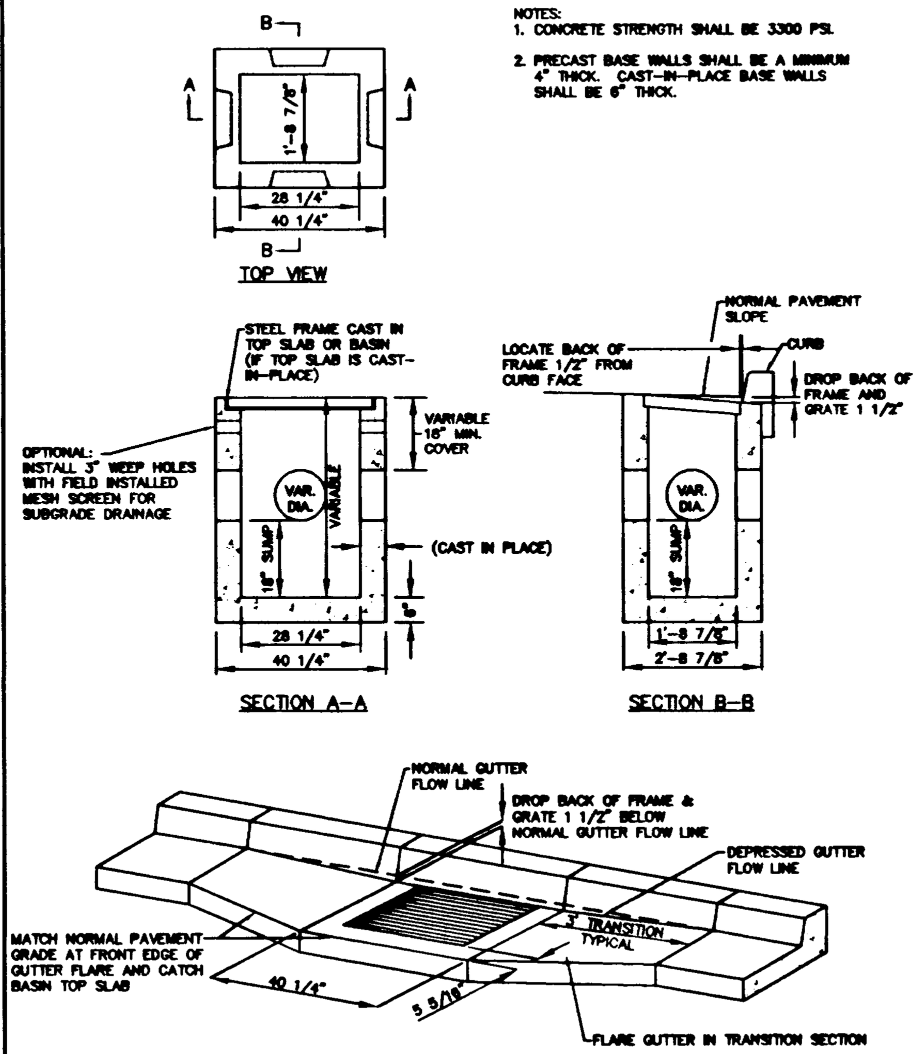

NOTES:
1. CONCRETE STRENGTH SHALL BE 3300 PSI.
2. PRECAST BASE WALLS SHALL BE A MINIMUM 4" THICK. CAST-IN-PLACE BASE WALLS SHALL BE 6" THICK.

NOTE:
PRECAST TOP SLAB SHOWN WITH GUTTER TRANSITION FLARE IF THE TOP SLAB IS CAST-IN-PLACE, NO FLARE IS REQUIRED IN THE TRANSITION SECTION: MATCH THE TOP FRONT EDGE OF THE FRAME AND THE TOP FRONT EDGE OF THE CAST-IN-PLACE TOP SLAB TO THE NORMAL PAVEMENT GRADE.

Type G-1 Catch Basin with Sump

West Linn | DATE: JAN 2000 | DRAWING NO. WL-602 | FILE NO. 00-602

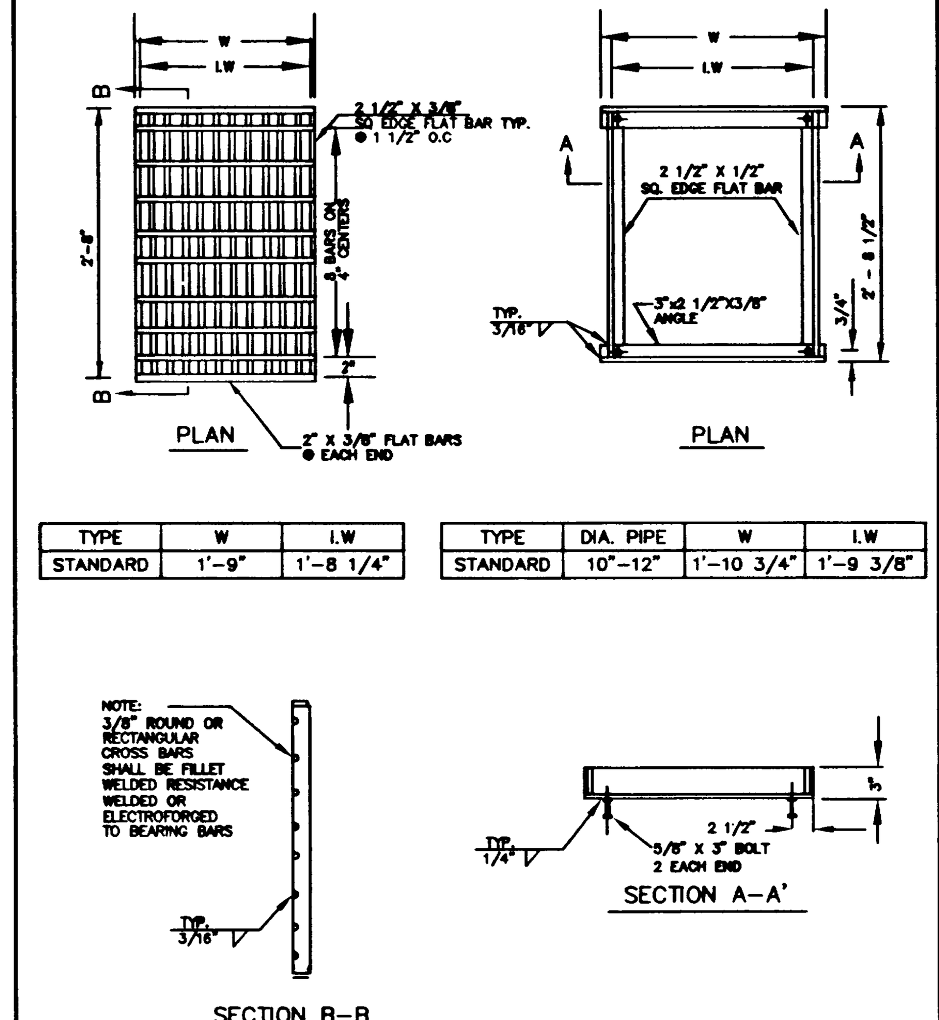

TYPE	W	LW
STANDARD	1'-9"	1'-8 1/4"

TYPE	DIA. PIPE	W	LW
STANDARD	10"-12"	1'-10 3/4"	1'-9 3/8"

NOTE:
USE VERTICAL BEADS IN CORNERS, FILLET WELD JOINT ON BOTOM OF FRAME. GRATE MUST REST FLAT ON FRAME SURFACE.

Frame & Grate for Gutter & Curb Inlets

West Linn | DATE: JAN 2000 | DRAWING NO. WL-602A | FILE NO. 00-602A

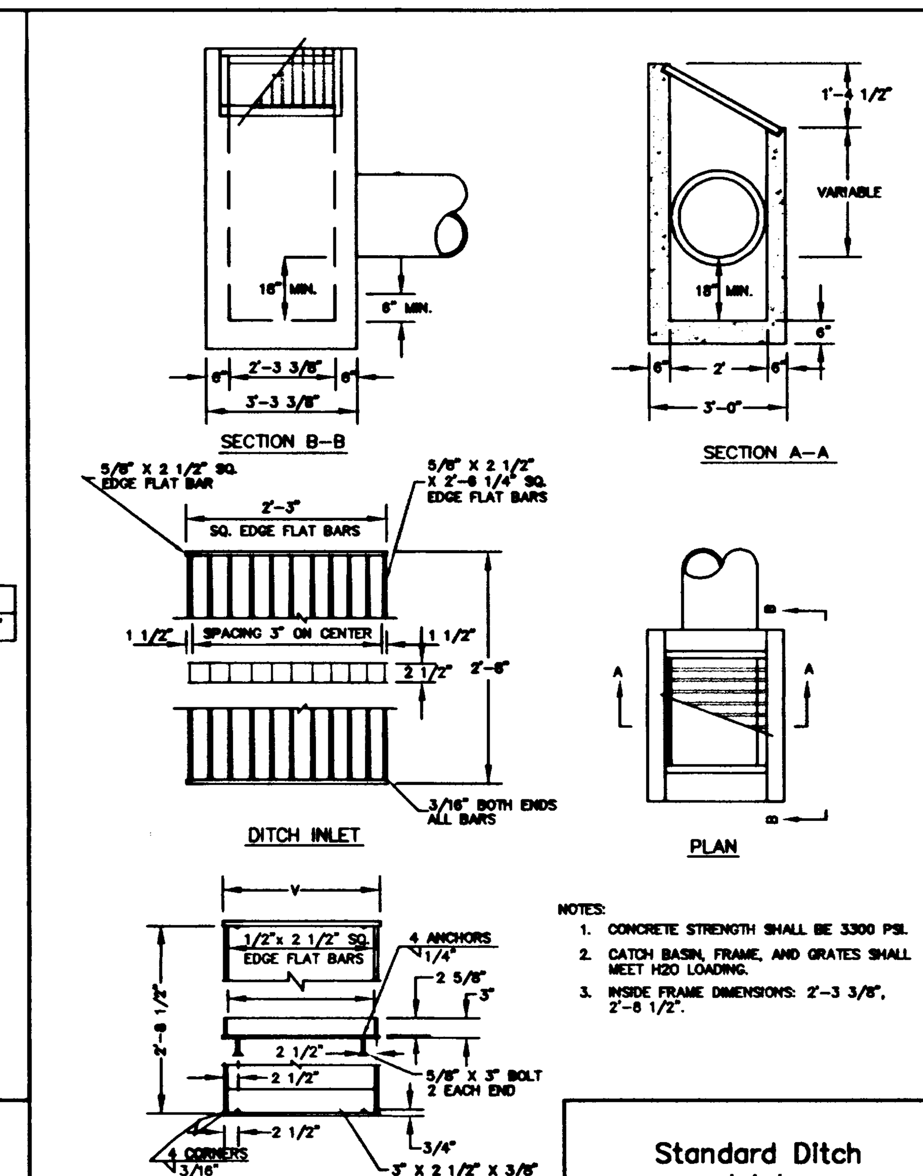

NOTES:
1. CONCRETE STRENGTH SHALL BE 3300 PSI.
2. CATCH BASIN, FRAME, AND GRATES SHALL MEET H20 LOADING.
3. INSIDE FRAME DIMENSIONS: 2'-3 3/8", 2'-8 1/2".

NOTE:
3/8" CROSS BARS SHALL BE FLUSH WITH THE GRATE SURFACE AND MAY BE FILLET WELDED, RESISTANCE WELDED OR ELECTROFORGED TO BEARING BARS.

DITCH INLET FRAME

INLET TYPE	V	Y	Y1	NO. OF BARS	TYPE
D	2'-4 3/4"	2'-3 3/8"	2'-3"	9	1

Standard Ditch Inlet

West Linn | DATE: JAN 2000 | DRAWING NO. WL-603 | FILE NO. 00-603

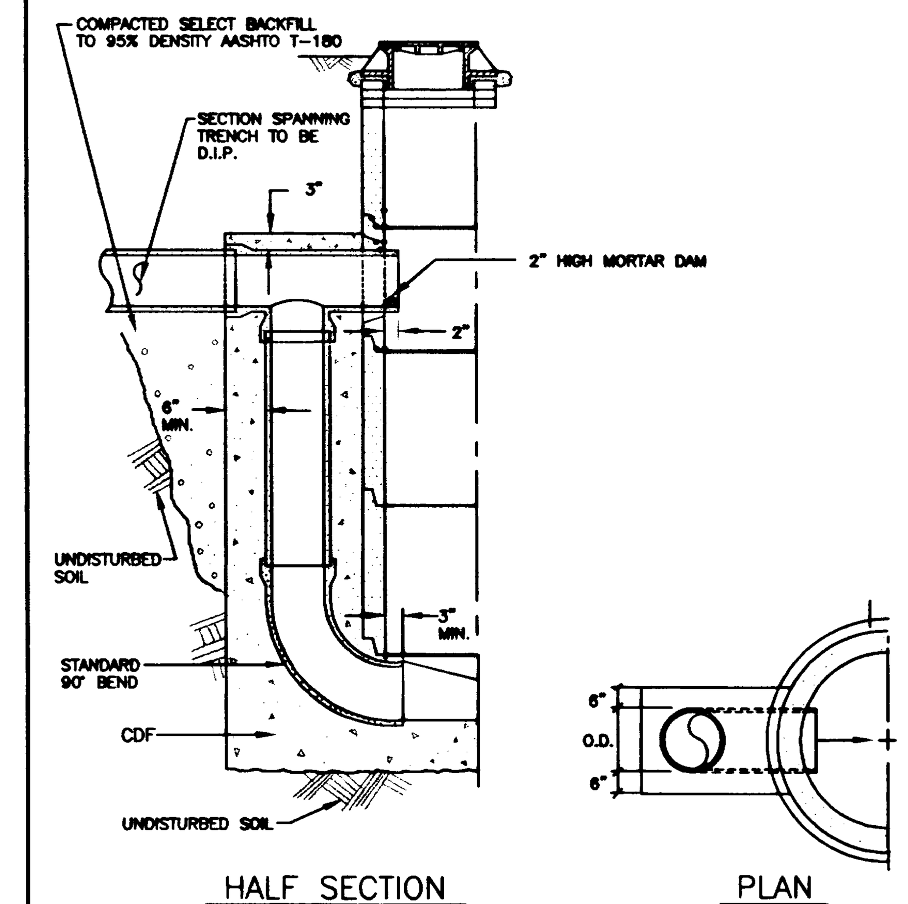

Outside Drop Manhole

West Linn | DATE: JAN 2000 | DRAWING NO. WL-301 | FILE NO. 00-301

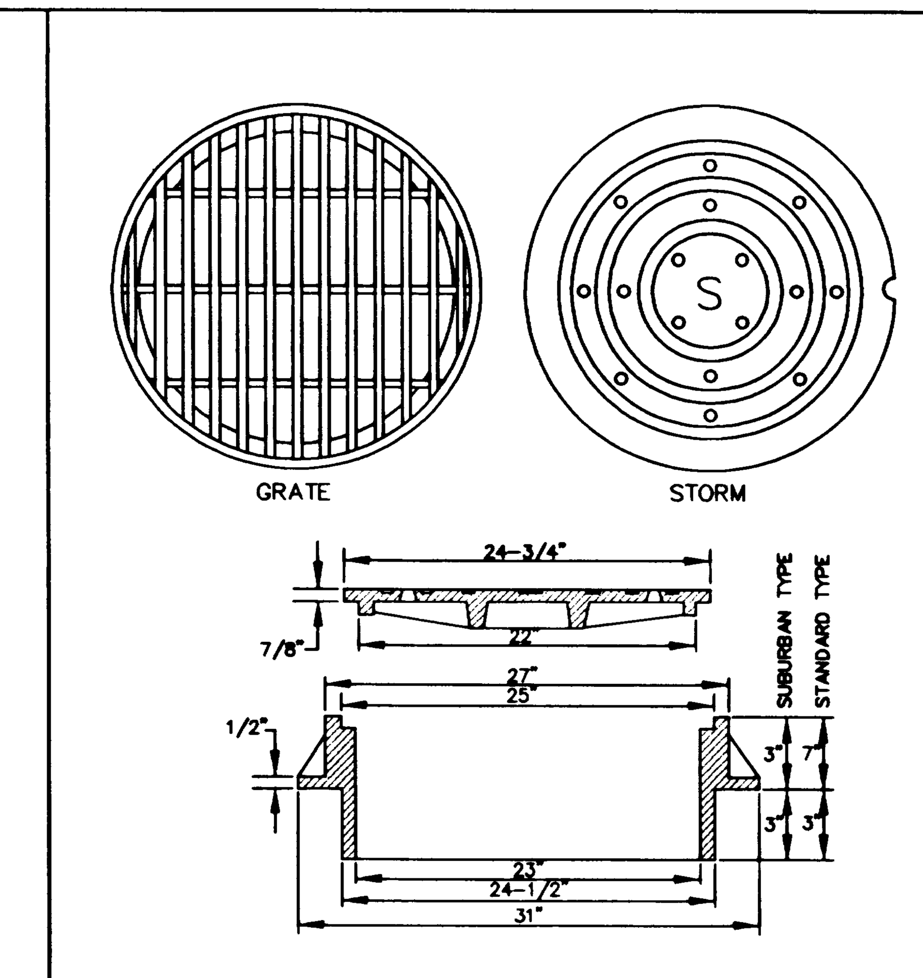

NOTES:
1. USE SUBURBAN TYPE ONLY IN NON-TRAFFIC AREAS, AND ONLY WITH APPROVAL BY THE CITY.
2. COVER AND FRAME SHALL BE GRAY CAST IRON ASTM A-48 CLASS 30.
3. COVER AND FRAME TO BE MACHINED TO A TRUE BEARING ALL AROUND.
4. NOTCH LID FOR LIFTING HOOK.
5. OPEN GRATES REQUIRE APPROVAL BY CITY, AND MUST BE BICYCLE SAFE IF USED IN TRAFFIC AREAS.

SUBURBAN AND STANDARD MANHOLE FRAME AND COVER

Manhole Covers

West Linn | DATE: JAN 2000 | DRAWING NO. WL-605 | FILE NO. 00-605

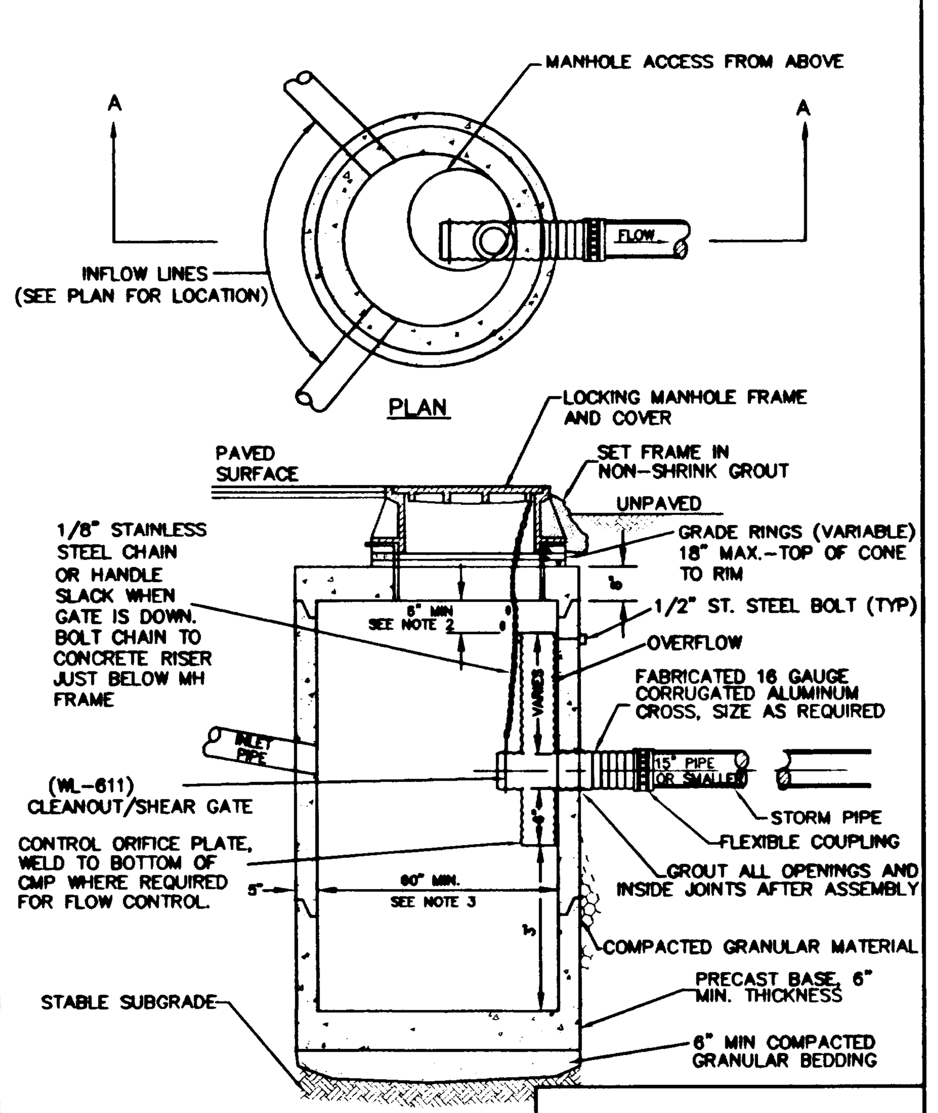

NOTES:
1. ALL PRECAST SECTIONS SHALL CONFORM TO THE REQUIREMENTS OF ASTM C-478.
2. DISTANCE FROM TOP OF OVERFLOW TO MH RIM SHALL BE BASED ON OVERFLOW CAPACITY CALC'S BY DESIGN ENGINEER. ASSUME ORIFICE CONTROL.
3. 72" MINIMUM DIA. MANHOLE REQUIRED FOR OUTLET OR INLET > 21".
4. NO STEPS REQUIRED

Pollution / Flow Control Manhole

West Linn | DATE: JAN 2000 | DRAWING NO. WL-607 | FILE NO. 00-607

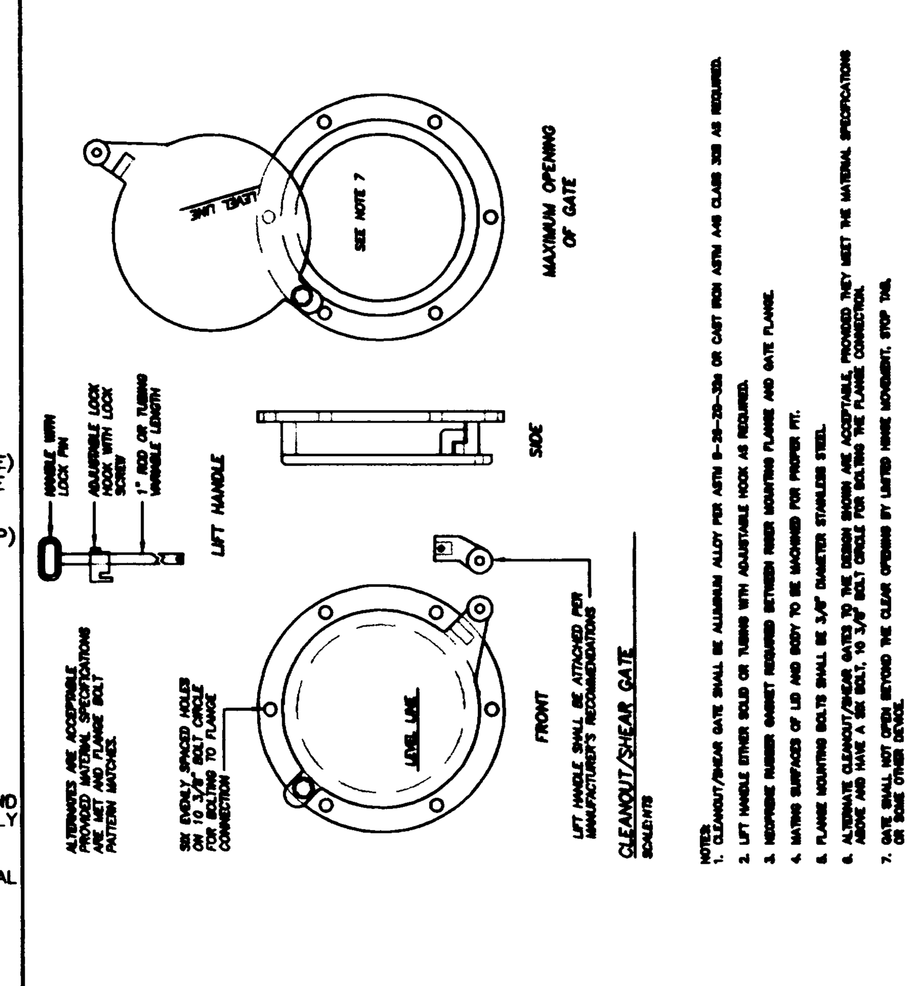

Cleanout / Shear Gate

West Linn | DATE: JAN 2000 | DRAWING NO. WL-611 | FILE NO. 00-611

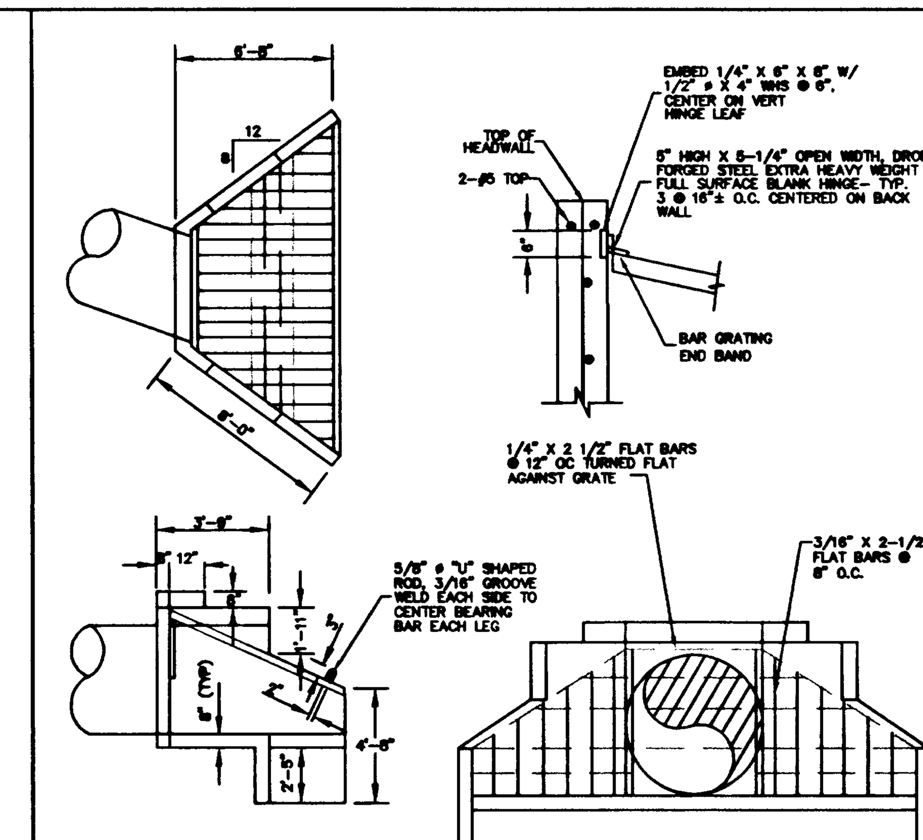

NOTES:
1. FOLLOW ODOT DETAIL 5-7.3 "ALTERNATIVE "A" INLET DETAILS - 2:1 FILL SLOPE". FOR REINFORCEMENT DETAIL USE 5'-0" BARREL HEIGHT. FORM WALL AROUND 54" PIPE.
2. ALL WALL THICKNESS ON THIS PAGE ARE 8" UNLESS OTHERWISE NOTED.

STEEL NOTES:
A. CODES SPECIFICATIONS: STEEL CONSTRUCTION SHALL CONFORM TO THE SPECIFICATIONS AND STANDARDS AS CONTAINED IN THE 9TH EDITION OF THE AISC MANUAL OF STEEL CONSTRUCTION.
B. MATERIAL: STRUCTURAL SHAPES, BARS, PLATES, AND SHEETS INDICATED ON THE DRAWINGS SHALL BE STEEL MEETING ASTM A36 SPECIFICATIONS. BOLTS SHALL CONFORM TO ASTM A307.
C. WELDING: WELDING SHALL CONFORM TO AWS D1.1 CODE FOR ARC AND GAS WELDING IN BUILDING CONSTRUCTION. ELECTRODE SHALL BE E70XX LOW HYDROGEN GROUP. WELDERS SHALL BE CONDUCTED BY WELDERS CERTIFIED BY THE AWS. ALL WELDS SHALL BE MIN 3/16" FILLET UNLESS OTHERWISE NOTED.
D. HOT DIP GALVANIZING: UNLESS OTHERWISE NOTED, ALL STEEL FABRICATIONS SHALL BE HOT DIPPED GALVANIZED AFTER FABRICATION.

Standard Inlet and Outlet Headwall Structure (For Outlets of 36" Dia. or Greater)

West Linn | DATE: JAN 2000 | DRAWING NO. WL-612 | FILE NO. 00-612

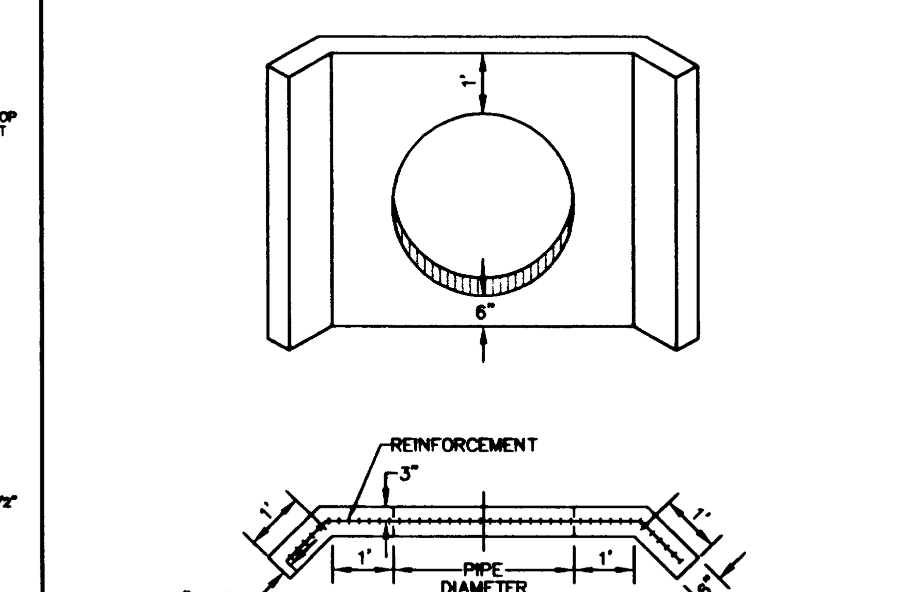

NOTES:
1. USE CONCRETE HAVING A 28 DAY DESIGN STRENGTH OF 3300 PSI.
2. OUTLET WING WALL SHALL BE USED FOR ALL OUTFALL PIPES FROM 10" TO 36".
3. THIS DETAIL REPRESENTS THE MINIMUM REQUIREMENT. THE NEED FOR ADDITIONAL STEEL, A FOOTING AND DRAINAGE BEHIND THE WALL SHALL BE INVESTIGATED BY THE DESIGN ENGINEER.
4. FOR PIPES LARGER THAN 33" OR MULTIPLE PIPE OUTLETS, USE DETAIL WL-612.
5. CONCRETE REINFORCEMENT SHALL CONSIST OF:
   A) ADDING A POLY-FIBER MESH TO THE CONCRETE MIX OR
   B) USE (2) #4 BARS ABOVE AND BELOW PIPE AND #4 BARS AT 6" O.C. VERTICALLY.

Outlet Headwall (For Outlet Pipes of 10" to 33")

West Linn | DATE: JAN 2000 | DRAWING NO. WL-613 | FILE NO. 00-613

D = PIPE DIAMETER
W = BOTTOM WIDTH OF CHANNEL
P = WETTED PERIMETER OF CHANNEL

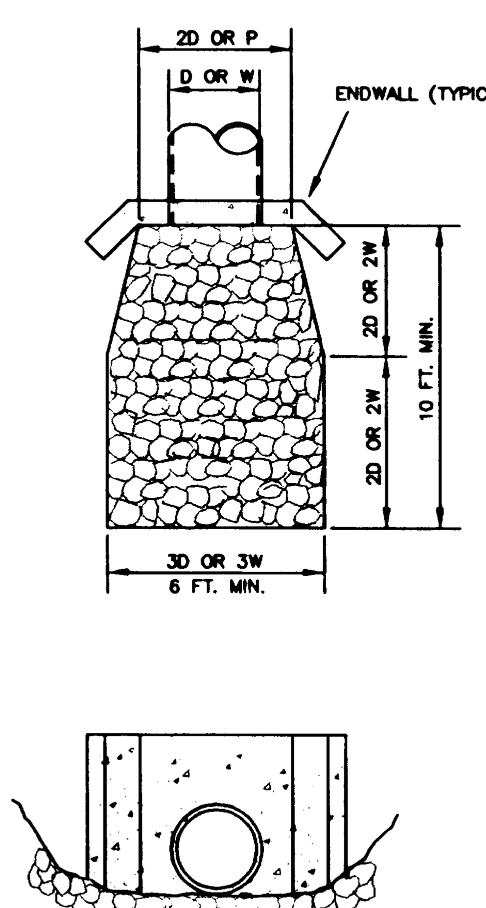

DESIGN VELOCITY FT./SEC	ROCK CLASSIFICATION BY WEIGHT
6 - 10	200 LBS.
10 - 12	1/4 TON
12 - 14	1/2 TON
14 - 16	1 TON
16 - 18	2 TON

SELECTION OF RIP RAP (SEE NOTE 1)

NOTES:
1. DIMENSIONS FOR RIP RAP APPLY TO FLOWS < 2 CFS RIP RAP FOR FLOWS > 2 CFS MUST BE DESIGNED BY AN ENGINEER FLOWS > 20 FPS SHALL USE ENERGY DISSIPATOR
2. TYPE OF RIP RAP
   A. REGULAR QUARRY STONE CLASS 50-200
   B. COBBLESTONE
   C. CONCRETE (ONLY ALLOWED UPON APPROVAL OF THE DISTRICT)
3. PLACEMENT
   A. MINIMUM DEPTH = 1 1/2 TIMES AVERAGE STONE SIZE
   B. ROCKS SHALL BE PLACED TO PROVIDE A MINIMUM OF VOIDS.
   C. SURFACE ROCKS OR CONCRETE SHALL PROTRUDE AT LEAST 1/2 THEIR VERTICAL DIMENSION.
   D. RIP RAP IS TO BE PLACED OVER A NATURAL BEDDING, OR IT MAY BE GROUTED OR PLACED OVER A GRAVEL BEDDING AS REQUIRED BY THE CITY.

Storm Sewer Outfall

West Linn | DATE: JAN 2000 | DRAWING NO. WL-614 | FILE NO. 00-614

W R G DESIGN INC.
5415 S.W. Westgate Dr., Suite 100
Portland, Oregon 97221
503|419-2500 FAX: 503|419-2600
PLANNERS ■ ENGINEERS ■ LANDSCAPE ARCHITECTS ■ SURVEYORS

REGISTERED PROFESSIONAL ENGINEER 19,172 OREGON JULY 15, 1997 RANDALL S. DYER
EXPIRES: 12/31/03

STORM DRAIN DETAILS
MACKENZIE ROSE ESTATES - P.U.D.
WEST LINN, OREGON

J.T. SMITH COMPANIES
REAL ESTATE DEVELOPMENT
22400 SALAMO ROAD, SUITE 204
WEST LINN, OREGON 97068

RECORD DRAWING
11/26/2001
THESE RECORD DRAWINGS HAVE BEEN PREPARED, IN PART, ON THE BASIS OF INFORMATION COMPILED AND FURNISHED BY THE CONTRACTOR, REVISED CONSTRUCTION PLANS, AND FIELD OBSERVATIONS DURING CONSTRUCTION.

PROJECT NO.
JTS007

DATE	01/25/01
DRAFTED	D. LAVOIE
DESIGNED	J NEMEC
ENGINEER	R. DYER
CHECKED	

SHEET TITLE
STORM DETAILS
SHEET NUMBER
C116

MACKENZIE ROSE ESTATES - P.U.D.

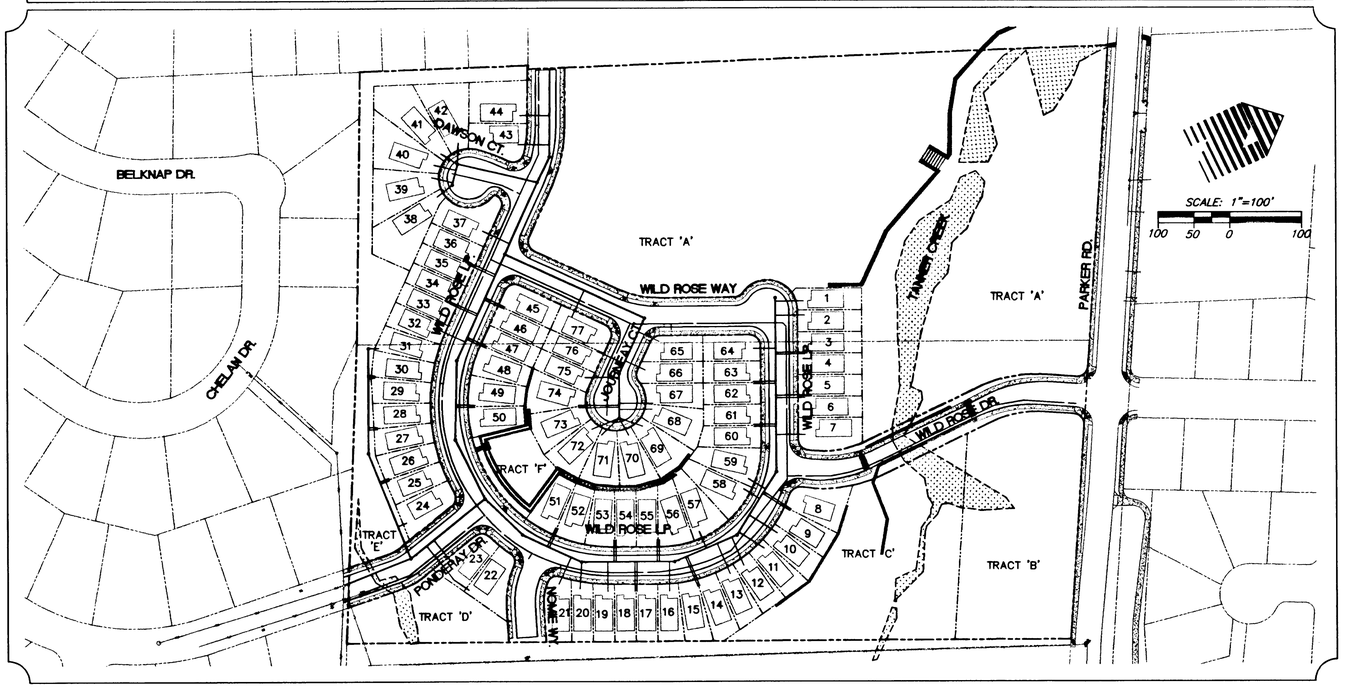

Index of Sanitary/Water Sheets

SANITARY/WATER CONSTRUCTION PLANS

C200 Sanitary/Water Cover Sheet
C200A Composite Sanitary / Water Plan
C201 Wild Rose Loop Sta: 10+00 to 15+00
C202 Wild Rose Loop Sta: 15+00 to 19+00
C203 Wild Rose Loop Sta: 19+00 to 23+58.09
C204 Wild Rose Way
C205 Dawson Court and Journeay Court
C206 Ponderay Drive
C207 Sanitary Sewer Line "F" Plan
C208 Wild Rose Drive Water Plan
C209 Sheet Not Used
C210 Sanitary Sewer Details
C211 Water Details

Legend

SS LINE A	PROPOSED SANITARY SEWER LINE AND MANHOLE
8" SS	EXISTING SANITARY SEWER FEATURES
SS LINE C	SANITARY SEWER LINE AND CLEANOUT
	STORM FEATURES ON SEPERATE SHEETS
	CENTERLINE OF RIGHT OF WAY
	RIGHT OF WAY/PROPERTY LINE
	PROPOSED WATER LINE
	PROPOSED WATER VALVE
	PROPOSED FIRE HYDRANT
	PROPOSED WATER METER
	PROPOSED AIR RELEASE VLAVE

Water Construction Notes

1. ALL CONSTRUCTION SHALL BE IN CONFORMANCE WITH THE CURRENT EDITION OF THE CITY OF WEST LINN 'STREET/UTILITY DESIGN AND CONSTRUCTION STANDARDS' AND WITH APWA STANDARDS.
2. NOTIFY CITY OF WEST LINN 48 HOURS PRIOR TO COMMENCING CONSTRUCTION TO SET UP A PRE-CONSTRUCTION MEETING.
3. ALL PIPE AND FITTINGS SHALL BE DUCTILE IRON, CEMENT-LINED, OF NEW MANUFACTURE AND MADE IN THE USA. PIPE WILL BE TYTON JOINT DUCTILE IRON, CLASS 52. ALL FITTINGS SHALL BE MECHANICAL JOINT (MJ) UNLESS OTHERWISE SPECIFIED.
4. 36" MINIMUM OF 3/4" MINUS GRAVEL COVER FOR ALL WATER MAINS IN STREET AND RIGHTS-OF-WAY.
5. ALL VALVE OPERATING NUTS SHALL BE WITHIN 36" OF FINISHED GRADE, OTHERWISE VALVE OPERATING NUT EXTENSIONS WILL BE REQUIRED.
6. ALL WATERLINES SHALL BE DISINFECTED AND TESTED PER CITY OF WEST LINN STANDARDS
7. NEW WATERLINES SHALL NOT BE CONNECTED TO EXISTING SYSTEMS PRIOR TO TESTING AND ACCEPTANCE BY THE CITY
8. ALL CONNECTIONS TO EXISTING UTILITIES SHALL BE DONE IN THE PRESENCE OF A CITY REPRESENTATIVE.
9. WATERLINE TRENCH BACKFILL SHALL BE 95% COMPACTIONS OF T-180.

Sanitary Construction Notes

1. ALL CONSTRUCTION SHALL BE IN CONFORMANCE WITH THE CURRENT EDITION OF THE CITY OF WEST LINN 'STREET/UTILITY DESIGN AND CONSTRUCTION STANDARDS' AND WITH APWA STANDARDS.
2. ALL SANITARY SEWER PIPE (EXCEPT SEWER SERVICE LATERALS) SHALL BE PVC PIPE CONFORMING TO ASTM SPECIFICATION D3034 (SDR 35). GASKETS SHALL BE RUBBER RING TYPE CONFORMING TO THE REQUIREMENTS OF ASTM 477 AND ASTM 3213. PIPES IN AREAS WITH LESS THAN 3' OF COVER SHALL BE PVC C-900.
3. ALL SANITARY SEWER SERVICE LATERALS SHALL BE 4" PVC PIPE CONFORMING TO ASTM SPECIFICATION D3034 (SDR-35), UNLESS NOTED OTHERWISE. SANITARY SEWER SERVICE LATERALS SHALL CONNECT TO THE MAIN LINE BY MEANS OF A PRECAST TEE. ALL LATERAL CROSS POINTS MUST BE IDENTIFIED BY A CURB SYMBOL STAMP A "S" IN THE CURB AT EACH LATERAL STUB OUT.
4. AIR TESTING OF THE SANITARY SEWER SYSTEM SHALL BE CONDUCTED IN ACCORDANCE WITH CITY OF WEST LINN STANDARDS. ALL NECESSARY TESTS SHALL BE PERFORMED BY THE CONTRACTOR AND WITNESSED BY A REPRESENTATIVE OF THE CITY OF WEST LINN AND THE ENGINEER.
5. LOCATION OF EXISTING UTILITIES ARE BASED ON AVAILABLE INFORMATION. IT IS THE CONTRACTORS RESPONSIBILITY TO FIELD VERIFY DEPTH AND LOCATION OF EXISTING UTILITIES PRIOR TO CONSTRUCTION AND INFORM THE ENGINEER OF ANY DISCREPANCIES IN THE PLANS. CALL FOR LOCATES A MINIMUM OF 48 HOURS PRIOR TO CONSTRUCTION. U.S.A. LINE LOCATE 681-7044.
6. FINISHED RIM ELEVATIONS OF MANHOLES WITHIN PAVEMENT ARE APPROXIMATE. FINAL FINISHED RIM ELEVATIONS SHALL MATCH FINISHED PAVEMENT GRADES. RIMS OUTSIDE OF PAVEMENT SHALL BE SET 12" ABOVE FINISH GRADE.
7. PIPE BEDDING AND BACKFILL SHALL CONFORM TO CITY OF WEST LINN AND APWA STANDARDS.
8. SANITARY SEWER MANHOLE CONSTRUCTION SHALL CONFORM TO CITY OF WEST LINN AND APWA STANDARDS.
9. ALL SANITARY SEWER SERVICE LATERALS SHALL TERMINATE 3' BEYOND THE PUBLIC UTILITY EASEMENT UNLESS OTHERWISE NOTED, AND SHALL BE PLUGGED TO PREVENT DIRT AND DEBRIS FROM ENTERING PIPE IN ACCORDANCE WITH CITY OF WEST LINN STANDARDS. THE ENDS OF THE LATERALS SHALL BE MARKED WITH A WOOD 2"X4" SET VERTICALLY AND EXTENDING A MINIMUM OF 3' ABOVE FINISH GRADE. THE WOOD MARKER SHALL BE PAINTED AND MARKED AS DIRECTED BY A REPRESENTATIVE FROM CITY OF WEST LINN. SEE STANDARD DRAWING WL-218.
10. A MINIMUM OF EIGHTEEN INCHES (18") VERTICAL SEPARATION IS REQUIRED BETWEEN WATER AND SANITARY LINES. A MINIMUM OF 10 FEET (10') HORIZONTAL SEPARATION IS REQUIRED BETWEEN WATER AND SANITARY. ALL CONSTRUCTION SHALL MEET CITY, DEQ AND STATE WATER RESOURCES BOARD REQUIREMENTS FOR SEPARATION.
11. ALL SANITARY SYSTEMS SHALL BE THOROUGHLY CLEANED, AIR TESTED, VIDEO INSPECTED, PASS THE REQUIRED COMPACTION TEST (ASHTO T-180), AND A DEFLECTION TEST, PER CITY OF WEST LINN STANDARD SPECIFICATIONS. ALL REQUIRED TESTING SHALL BE PERFORMED BY THE CONTRACTOR.
12. THE CONTRACTOR SHALL AT ALL TIMES ABIDE BY APPLICABLE SAFETY RULES OF O.S.H.A. AND IN PARTICULAR THOSE PERTAINING TO ADEQUATE SHORING AND TRENCH PROTECTION OF WORKMEN.
13. NEW SANITARY SYSTEMS SHALL NOT BE CONNECTED TO EXISTING SYSTEMS PRIOR TO TESTING AND ACCEPTANCE BY THE CITY.
14. ALL CONNECTIONS TO EXISTING UTILITIES SHALL BE DONE IN THE PRESENCE OF A CITY REPRESENTATIVE.
15. SANITARY SEWER TRENCH BACKFILL SHALL BE 95% COMPACTIONS OF T-180.
16. **THE CONTRACTOR SHALL KEEP RECORDS OF ALL CONSTRUCTION THAT DIFFERS FROM THE APPROVED PLANS AND SHALL MAINTAIN "RECORD DRAWINGS" DURING THE CONSTRUCTION PERIOD. "RECORD DRAWINGS" SHALL BE SUBMITTED TO THE ENGINEER AT THE END OF THE PROJECT, OR A COPY THEREOF.**

WRG DESIGN INC.
5415 S.W. Westgate Dr., Suite 100
Portland, Oregon 97221
☎ 503 | 419-2500 FAX: 503 | 419-2600
PLANNERS • ENGINEERS • LANDSCAPE ARCHITECTS • SURVEYORS

REGISTERED PROFESSIONAL ENGINEER 19,172 OREGON JULY 15, 1997 RANDALL S. DYER
EXPIRES: 12/31/03

SANITARY / WATER COVER SHEET
MACKENZIE ROSE ESTATES - P.U.D.
WEST LINN, OREGON

J.T. SMITH COMPANIES
REAL ESTATE DEVELOPMENT
22400 SALAMO ROAD SUITE 204
WEST LINN, OREGON 97068

RECORD DRAWING
11/26/2001
THESE RECORD DRAWINGS HAVE BEEN PREPARED, IN PART, ON THE BASIS OF INFORMATION COMPILED AND FURNISHED BY THE CONTRACTOR, REVISED CONSTRUCTION PLANS, AND FIELD OBSERVATIONS DURING CONSTRUCTION.

PROJECT NO. JTS007
DATE 01/25/01
DRAFTED D. LAVOIE
DESIGNED J NEMEC
ENGINEER R. DYER
CHECKED

SHEET TITLE
SANITARY SEWER AND WATER
SHEET NUMBER
C200

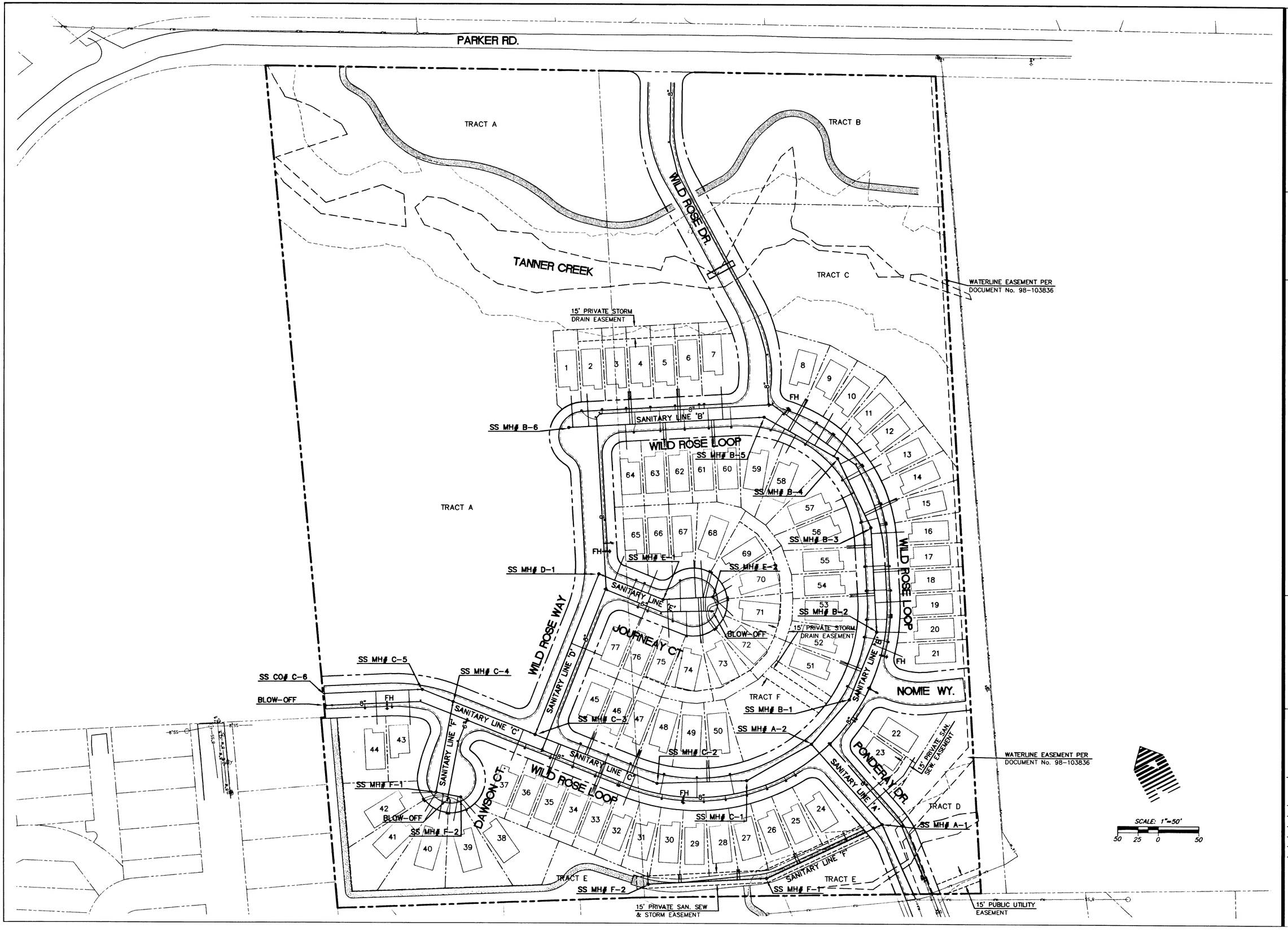

WRG DESIGN INC.
5415 S.W. Westgate Dr., Suite 100
Portland, Oregon 97221
☎ 503 | 419-2500 FAX: 503 | 419-2600
PLANNERS ■ ENGINEERS ■ LANDSCAPE ARCHITECTS ■ SURVEYORS

REGISTERED PROFESSIONAL ENGINEER 19,172 OREGON JULY 15, 1997 RANDALL S. DYER
EXPIRES: 12/31/03

COMPOSITE SANITARY SEWER/WATER PLAN
MACKENZIE ROSE ESTATES - P.U.D.

WEST LINN, OREGON

J.T. SMITH COMPANIES
REAL ESTATE DEVELOPMENT
22400 SALAMO ROAD, SUITE 204
WEST LINN, OREGON 97068

RECORD DRAWING
11/26/2001

THESE RECORD DRAWINGS HAVE BEEN PREPARED, IN PART, ON THE BASIS OF INFORMATION COMPILED AND FURNISHED BY THE CONTRACTOR, REVISED CONSTRUCTION PLANS, AND FIELD OBSERVATIONS DURING CONSTRUCTION.

PROJECT NO. JTS007

DATE	01/25/01
DRAFTED	D. LAVOIE
DESIGNED	J NEMEC
ENGINEER	R. DYER
CHECKED	

SHEET TITLE: COMPOSITE SAN. SEW./WATER

SHEET NUMBER: C200A

WATER CONSTRUCTION NOTES

1. INSTALL 1" WATER SERVICE PER CITY STANDARDS (TYPICAL)
2. STA. 10+78.06, 17'RT. (WILD ROSE LP) INSTALL FIRE HYDRANT ASSY., INCLUDING 8"x6" TEE, 6" GATE VALVE, 6" D.I. LINE & THRUST BLOCK PER CITY STANDARDS
3. STA. 11+20.66, 5.7'RT. (WILD ROSE LP) INSTALL 8"-22 1/2° BEND w/MEGA-LUG & THRUST BLOCK PER CITY STANDARDS
4. STA. 10+02.48, 10'RT. (WILD ROSE LP) INSTALL 4" GATE VALVE WITH 4" BLOW-OFF PER CITY STANDARDS "WL-4048"
5. STA. 11+84.05, 10'RT. (WILD ROSE LP) INSTALL 8"x8"x6" TEE , INCLUDING 8" GATE VALVE, 6" GATE VALVE & THRUST BLOCK PER CITY STANDARDS
6. STA. 12+84.05, 10'RT. (WILD ROSE LP) INSTALL 8"x8"x8" TEE , INCLUDING 2-8" GATE VALVES & THRUST BLOCK PER CITY STANDARDS
7. STA. 14+66.35, 17'RT. (WILD ROSE LP) INSTALL FIRE HYDRANT ASSY., INCLUDING 8"x8"x6" TEE, 6" GATE VALVE, 6" D.I. LINE & THRUST BLOCK PER CITY STANDARDS
8. JOINT DEFLECTION SHALL BE 3° MAXIMUM ALONG STREET CURVES
9. STA. 10+10.50, 10'RT. (WILD ROSE LP) INSTALL 8" GATE VALVE

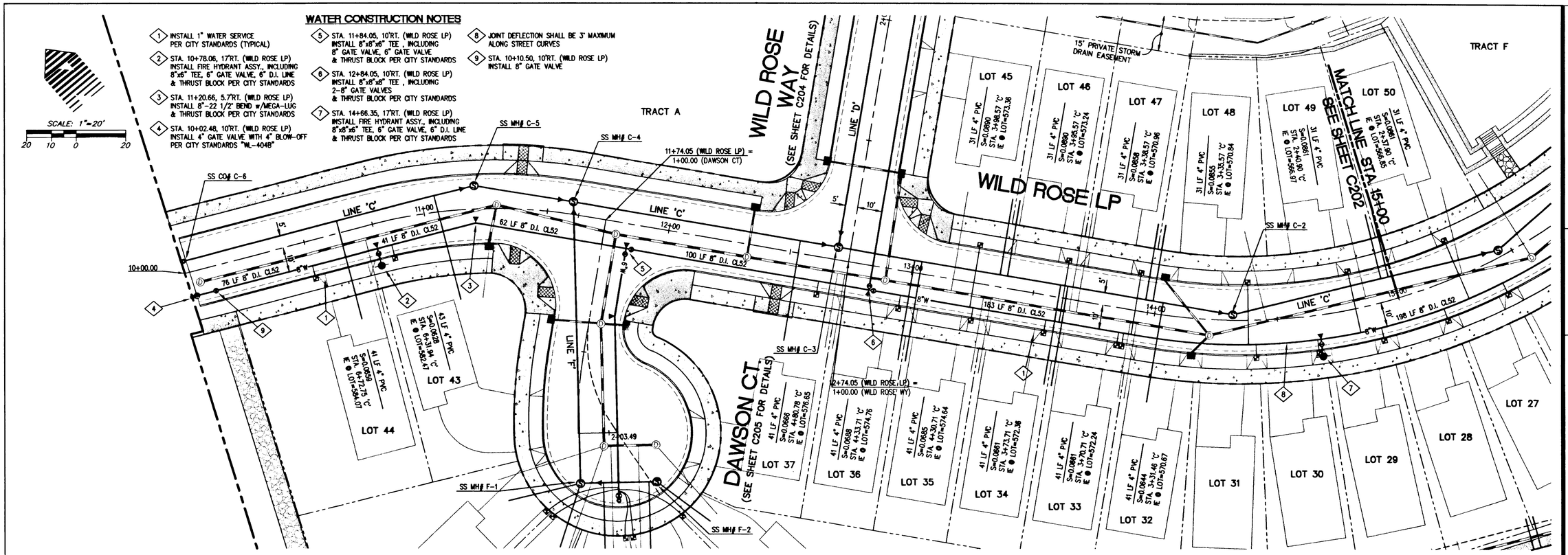

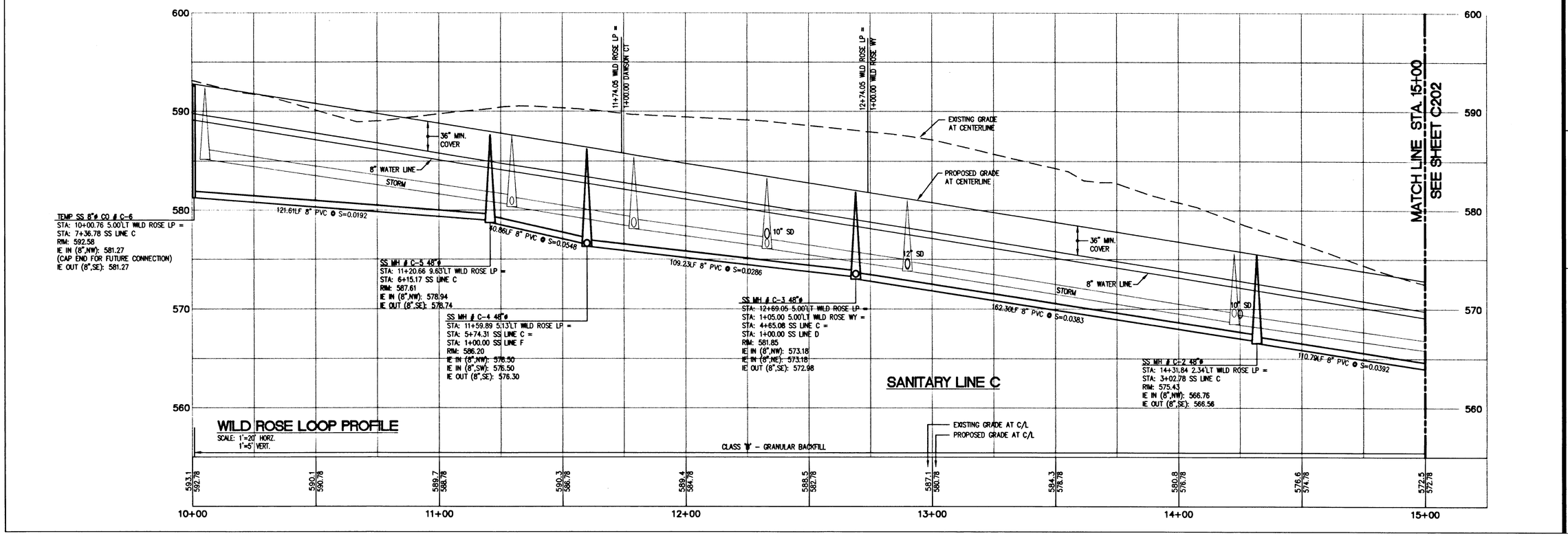

WRG DESIGN INC.
5415 S.W. Westgate Dr., Suite 100
Portland, Oregon 97221
503 | 419-2500 FAX: 503 | 419-2600
PLANNERS ■ ENGINEERS ■ LANDSCAPE ARCHITECTS ■ SURVEYORS

REGISTERED PROFESSIONAL ENGINEER 19,172 OREGON JULY 15, 1997 RANDALL S. DYER
EXPIRES: 12/31/03

WILD ROSE LOOP SANITARY + WATER PLAN
MACKENZIE ROSE ESTATES - P.U.D.
WEST LINN, OREGON

J.T. SMITH COMPANIES
REAL ESTATE DEVELOPMENT
22400 SALAMO ROAD, SUITE 204
WEST LINN, OREGON 97068

RECORD DRAWING
11/26/2001
THESE RECORD DRAWINGS HAVE BEEN PREPARED, IN PART, ON THE BASIS OF INFORMATION COMPILED AND FURNISHED BY THE CONTRACTOR, REVISED CONSTRUCTION PLANS, AND FIELD OBSERVATIONS DURING CONSTRUCTION.

PROJECT NO.	JTS007
DATE	01/25/01
DRAFTED	D. LAVOIE
DESIGNED	J NEMEC
ENGINEER	R. DYER
CHECKED	

SHEET TITLE: SANITARY SEWER & WATER
SHEET NUMBER: C201

J:\DATA\JTS007\Autocad\AS-BUILTS\AB-CD-BASE.dwg Wed Nov 21 11:17:31 2001 DGL

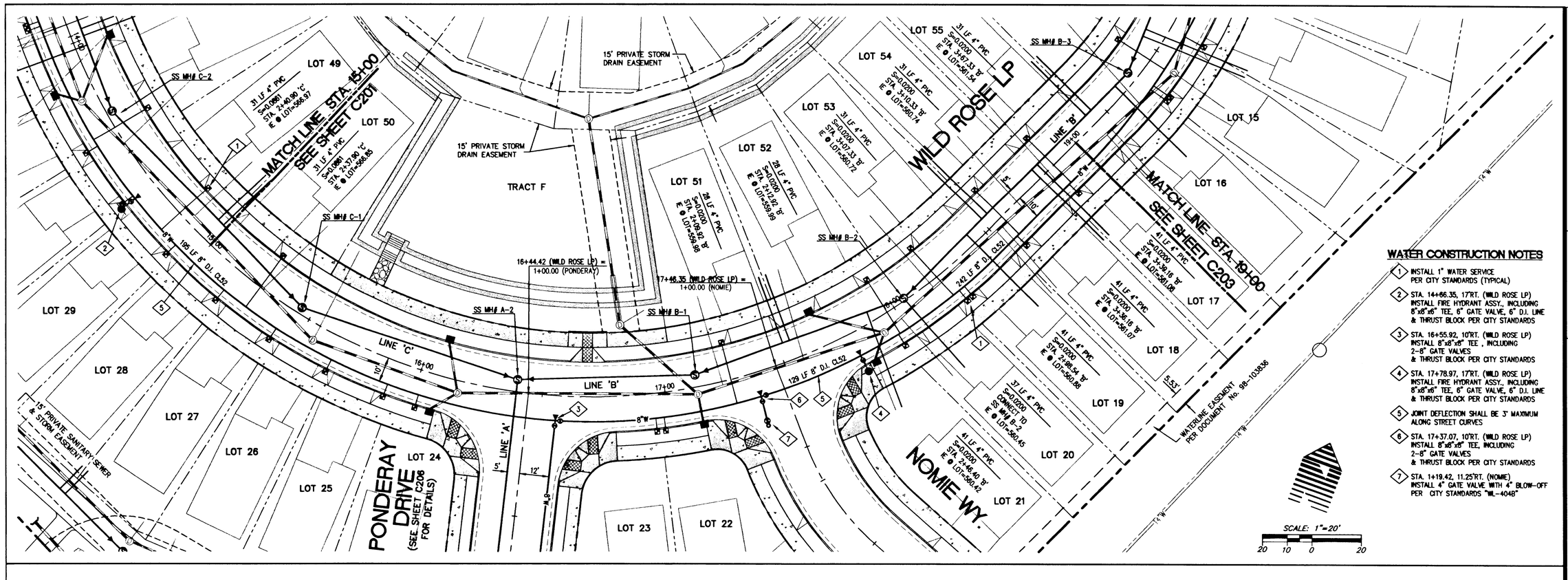

WATER CONSTRUCTION NOTES

1. INSTALL 1" WATER SERVICE PER CITY STANDARDS (TYPICAL)
2. STA. 14+66.35, 17'RT. (WILD ROSE LP) INSTALL FIRE HYDRANT ASSY., INCLUDING 8"x8"x6" TEE, 6" GATE VALVE, 6" D.I. LINE & THRUST BLOCK PER CITY STANDARDS
3. STA. 16+55.92, 10'RT. (WILD ROSE LP) INSTALL 8"x8"x8" TEE , INCLUDING 2-8" GATE VALVES & THRUST BLOCK PER CITY STANDARDS
4. STA. 17+78.97, 17'RT. (WILD ROSE LP) INSTALL FIRE HYDRANT ASSY., INCLUDING 8"x8"x6" TEE, 6" GATE VALVE, 6" D.I. LINE & THRUST BLOCK PER CITY STANDARDS
5. JOINT DEFLECTION SHALL BE 3° MAXIMUM ALONG STREET CURVES
6. STA. 17+37.07, 10'RT. (WILD ROSE LP) INSTALL 8"x8"x8" TEE, INCLUDING 2-8" GATE VALVES & THRUST BLOCK PER CITY STANDARDS
7. STA. 1+19.42, 11.25'RT. (NOMIE) INSTALL 4" GATE VALVE WITH 4" BLOW-OFF PER CITY STANDARDS "WL-404B"

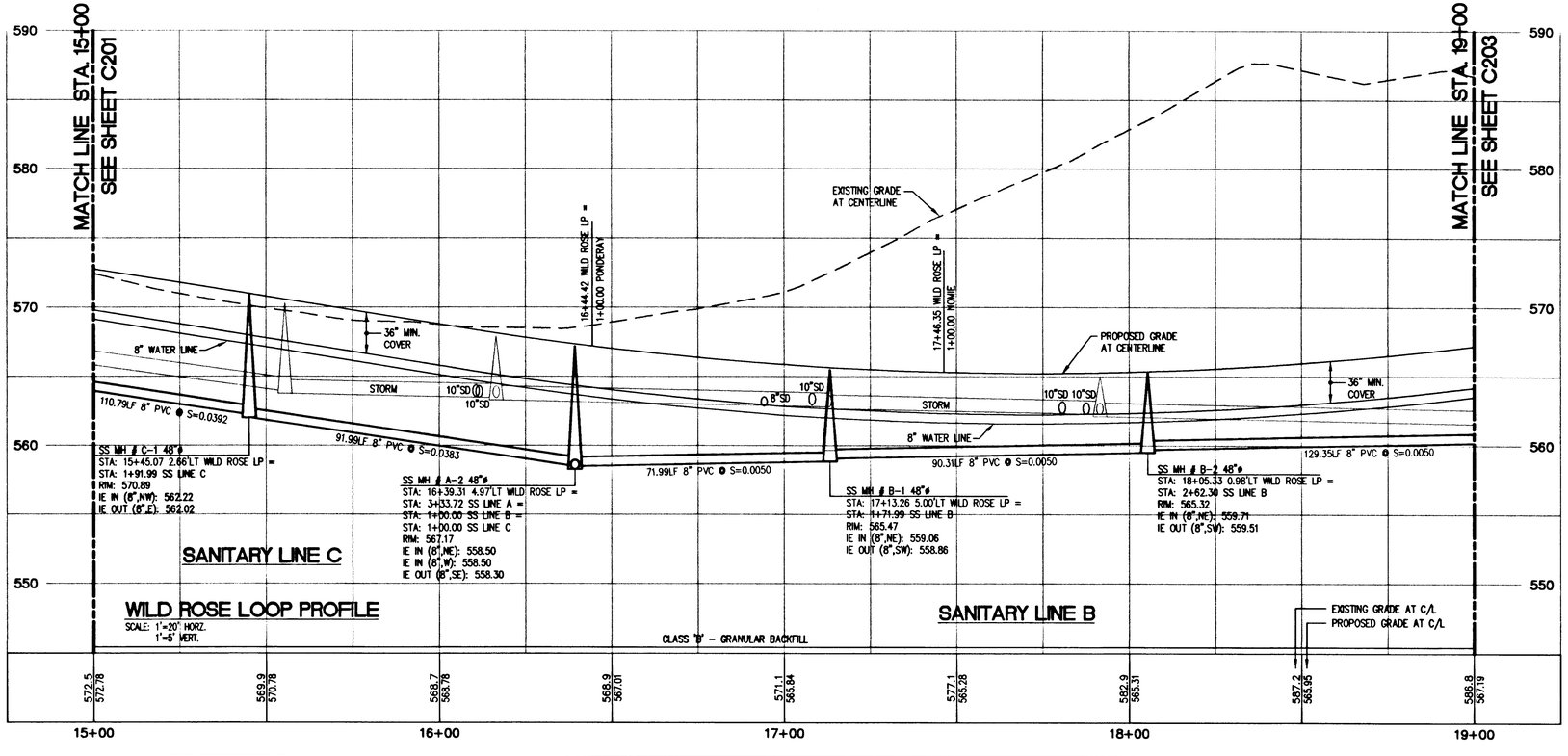

WRG DESIGN
5415 S.W. Westgate Dr., Suite 100
Portland, Oregon 97221
☎ 503 | 419-2500 FAX: 503 | 419-2600
PLANNERS • ENGINEERS • LANDSCAPE ARCHITECTS • SURVEYORS

REGISTERED PROFESSIONAL ENGINEER 19,172 OREGON JULY 15, 1997 RANDALL S. DYER
EXPIRES: 12/31/03

WILD ROSE LOOP SANITARY + WATER PLAN
MACKENZIE ROSE ESTATES - P.U.D.
WEST LINN, OREGON

J.T. SMITH COMPANIES
REAL ESTATE DEVELOPMENT
22400 SALAMO ROAD SUITE 204
WEST LINN, OREGON 97068

RECORD DRAWING
11/26/2001

THESE RECORD DRAWINGS HAVE BEEN PREPARED, IN PART, ON THE BASIS OF INFORMATION COMPILED AND FURNISHED BY THE CONTRACTOR, REVISED CONSTRUCTION PLANS, AND FIELD OBSERVATIONS DURING CONSTRUCTION.

PROJECT NO. JTS007

DATE	01/25/01
DRAFTED	D. LAVOIE
DESIGNED	J NEMEC
ENGINEER	R. DYER
CHECKED	

SHEET TITLE: SANITARY SEWER & WATER

SHEET NUMBER: C202

J:\DATA\JTS007\Autocad\AS-BUILTS\AB-CD-BASE.dwg Wed Nov 21 11:16:44 2001 DGL

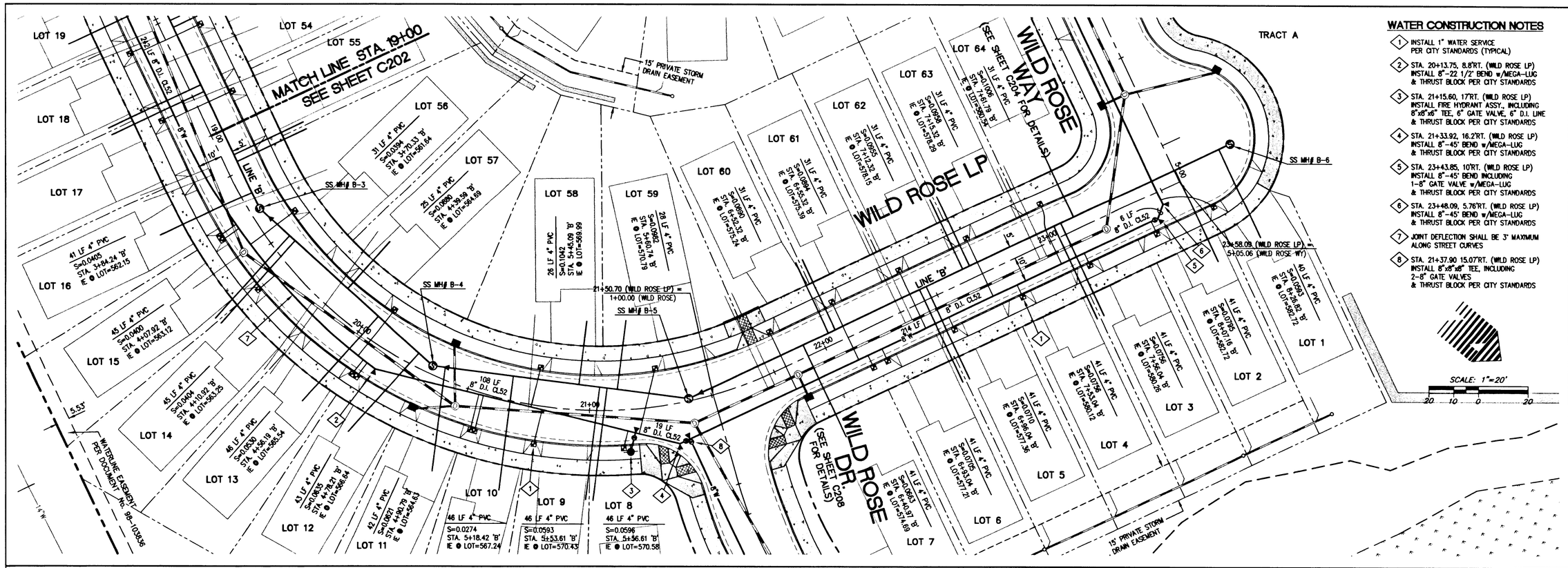

WATER CONSTRUCTION NOTES

1. INSTALL 1" WATER SERVICE PER CITY STANDARDS (TYPICAL)
2. STA. 20+13.75, 8.8'RT. (WILD ROSE LP) INSTALL 8"-22 1/2° BEND w/MEGA-LUG & THRUST BLOCK PER CITY STANDARDS
3. STA. 21+15.60, 17'RT. (WILD ROSE LP) INSTALL FIRE HYDRANT ASSY., INCLUDING 8"x8"x6" TEE, 6" GATE VALVE, 6" D.I. LINE & THRUST BLOCK PER CITY STANDARDS
4. STA. 21+33.92, 16.2'RT. (WILD ROSE LP) INSTALL 8"-45° BEND w/MEGA-LUG & THRUST BLOCK PER CITY STANDARDS
5. STA. 23+43.85, 10'RT. (WILD ROSE LP) INSTALL 8"-45° BEND INCLUDING 1-8" GATE VALVE w/MEGA-LUG & THRUST BLOCK PER CITY STANDARDS
6. STA. 23+48.09, 5.76'RT. (WILD ROSE LP) INSTALL 8"-45° BEND w/MEGA-LUG & THRUST BLOCK PER CITY STANDARDS
7. JOINT DEFLECTION SHALL BE 3° MAXIMUM ALONG STREET CURVES
8. STA. 21+37.90 15.07'RT. (WILD ROSE LP) INSTALL 8"x8"x8" TEE, INCLUDING 2-8" GATE VALVES & THRUST BLOCK PER CITY STANDARDS

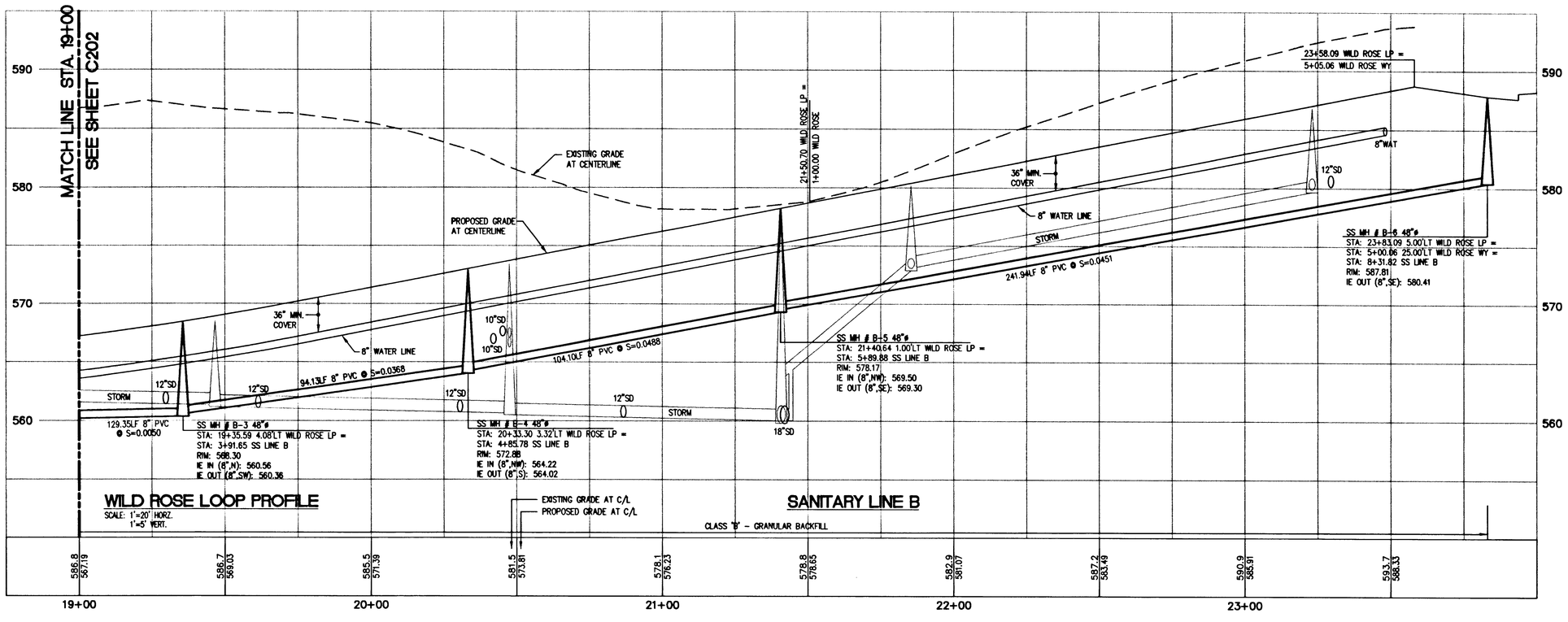

WRG DESIGN
5415 S.W. Westgate Dr., Suite 100
Portland, Oregon 97221
503 | 419-2500 FAX: 503 | 419-2600
PLANNERS • ENGINEERS • LANDSCAPE ARCHITECTS • SURVEYORS

REGISTERED PROFESSIONAL ENGINEER 9,172 OREGON JULY 15, 1997 RANDALL S. DYER
EXPIRES: 12/31/03

WILD ROSE LOOP SANITARY + WATER PLAN
MACKENZIE ROSE ESTATES - P.U.D.
WEST LINN, OREGON

J.T. SMITH COMPANIES
REAL ESTATE DEVELOPMENT
22460 S.W. BOONES FERRY ROAD, SUITE 204
WEST LINN, OREGON 97068

RECORD DRAWING
11/26/2001
THESE RECORD DRAWINGS HAVE BEEN PREPARED, IN PART, ON THE BASIS OF INFORMATION COMPILED AND FURNISHED BY THE CONTRACTOR, REVISED CONSTRUCTION PLANS, AND FIELD OBSERVATIONS DURING CONSTRUCTION.

PROJECT NO. JTS007

DATE	01/25/01
DRAFTED	D. LAVOIE
DESIGNED	J NEMEC
ENGINEER	R. DYER
CHECKED	

SHEET TITLE
SANITARY SEWER & WATER
SHEET NUMBER
C203

WATER CONSTRUCTION NOTES

1. INSTALL 1" WATER SERVICE PER CITY STANDARDS (TYPICAL)
2. STA. 3+00.74, 13.8'RT. (WILD ROSE WY) INSTALL 8"x8"x6" TEE, INCLUDING 8" GATE VALVE, 6" GATE VALVE, 8"-22 1/2° BEND & THRUST BLOCK & THRUST BLOCK PER CITY STANDARDS
3. STA. 3+44.86, 17'RT. (WILD ROSE WY) INSTALL FIRE HYDRANT ASSY., INCLUDING 8"x8"x6" TEE, 6" GATE VALVE, 6" D.I. LINE & THRUST BLOCK PER CITY STANDARDS
4. STA. 3+55.00, 23'RT. (WILD ROSE WY) INSTALL STANDARD AIR RELEASE VALVE UNIT PER CITY STANDARD "WL-405"

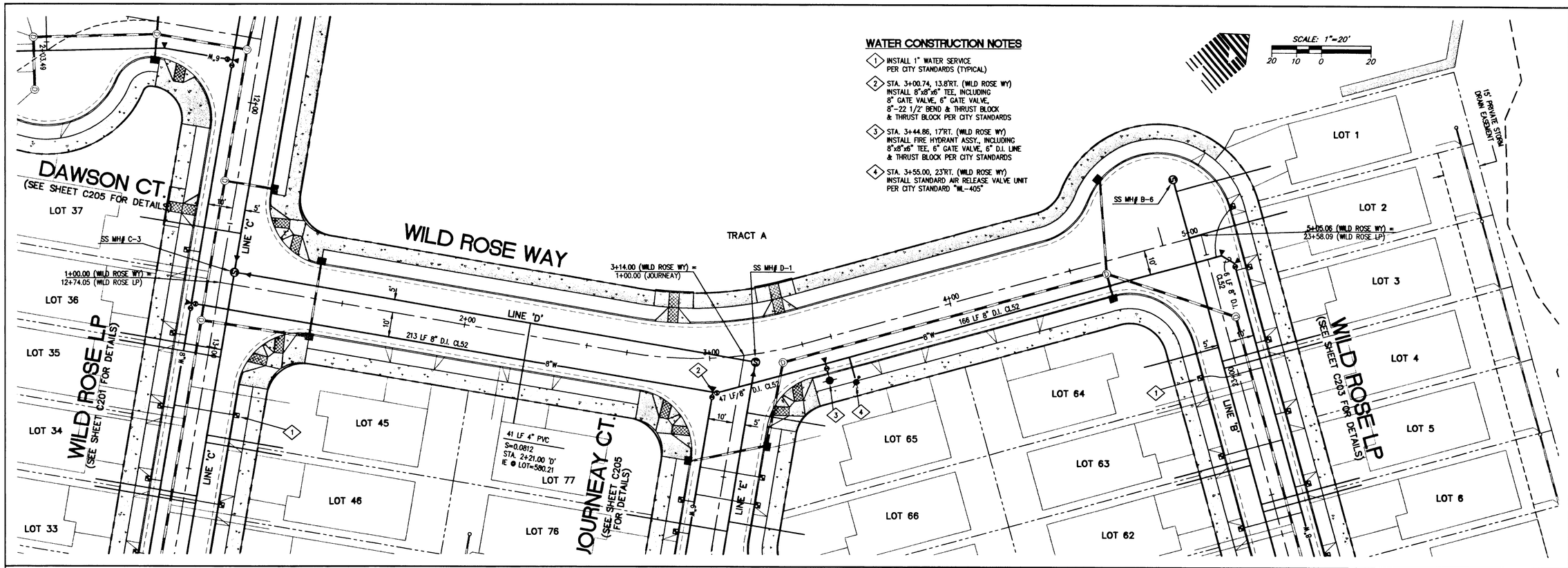

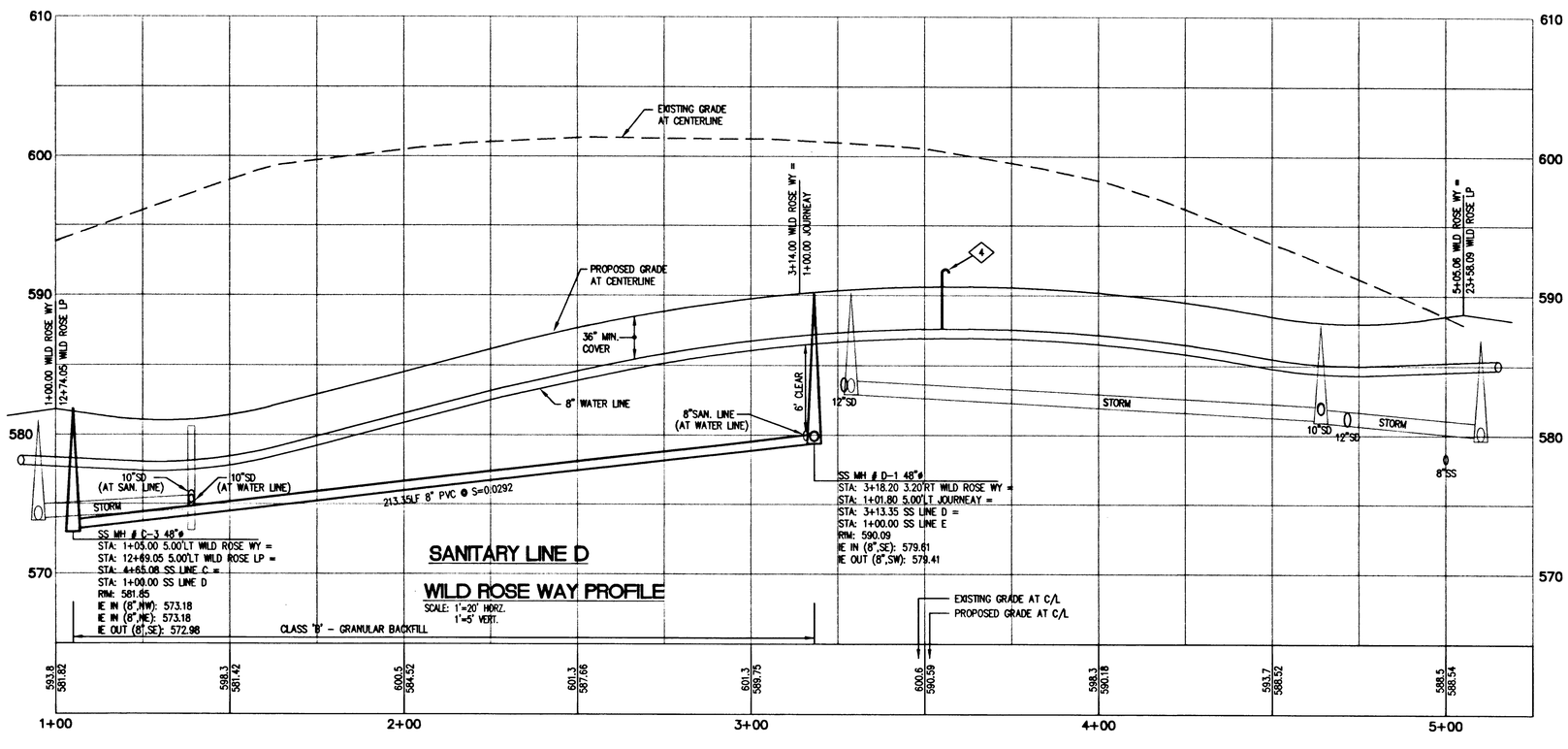

SANITARY LINE D

WILD ROSE WAY PROFILE

SCALE: 1"=20' HORZ.
1"=5' VERT.

W R G DESIGN INC
5415 S.W. Westgate Dr., Suite 100
Portland, Oregon 97221
☎ 503 | 419-2500 FAX: 503 | 419-2600
PLANNERS ▪ ENGINEERS ▪ LANDSCAPE ARCHITECTS ▪ SURVEYORS

REGISTERED PROFESSIONAL ENGINEER 19,172 OREGON JULY 15, 1997 RANDALL S. DYER
EXPIRES: 12/31/03

WILD ROSE WAY SANTARY + WATER PLAN
MACKENZIE ROSE ESTATES - P.U.D.
WEST LINN, OREGON

J.T. SMITH COMPANIES
PLA, LLA, FLS, DEVA, LUFMEA
22400 SALAMO ROAD, SUITE 204
WEST LINN, OREGON 97068

RECORD DRAWING
11/26/2001
THESE RECORD DRAWINGS HAVE BEEN PREPARED, IN PART, ON THE BASIS OF INFORMATION COMPILED AND FURNISHED BY THE CONTRACTOR, REVISED CONSTRUCTION PLANS, AND FIELD OBSERVATIONS DURING CONSTRUCTION.

PROJECT NO. JTS007

DATE	01/25/01
DRAFTED	D. LAVOIE
DESIGNED	J NEMEC
ENGINEER	R. DYER
CHECKED	

SHEET TITLE
SANITARY SEWER & WATER

SHEET NUMBER
C204

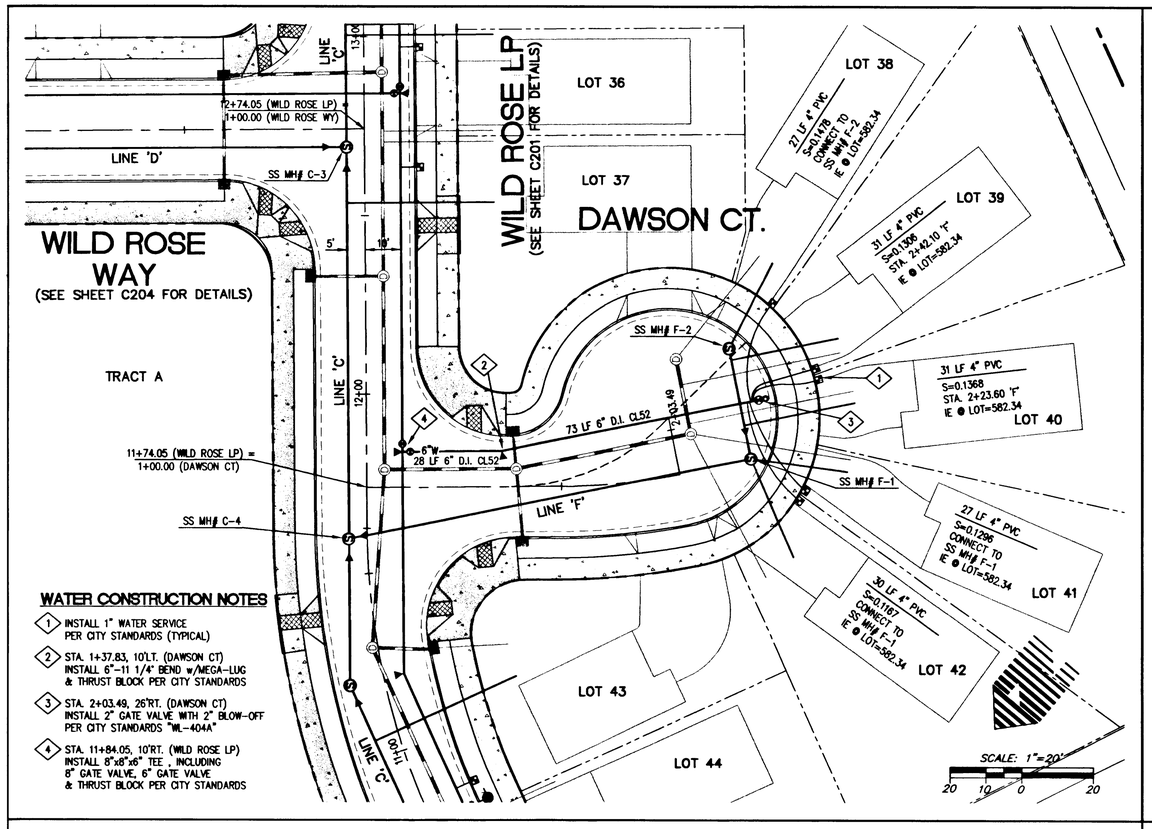

WATER CONSTRUCTION NOTES

1. INSTALL 1" WATER SERVICE PER CITY STANDARDS (TYPICAL)
2. STA. 1+37.83, 10'LT. (DAWSON CT) INSTALL 6"-11 1/4° BEND w/MEGA-LUG & THRUST BLOCK PER CITY STANDARDS
3. STA. 2+03.49, 26'RT. (DAWSON CT) INSTALL 2" GATE VALVE WITH 2" BLOW-OFF PER CITY STANDARDS "WL-404A"
4. STA. 11+84.05, 10'RT. (WILD ROSE LP) INSTALL 8"x8"x6" TEE, INCLUDING 8" GATE VALVE, 6" GATE VALVE & THRUST BLOCK PER CITY STANDARDS

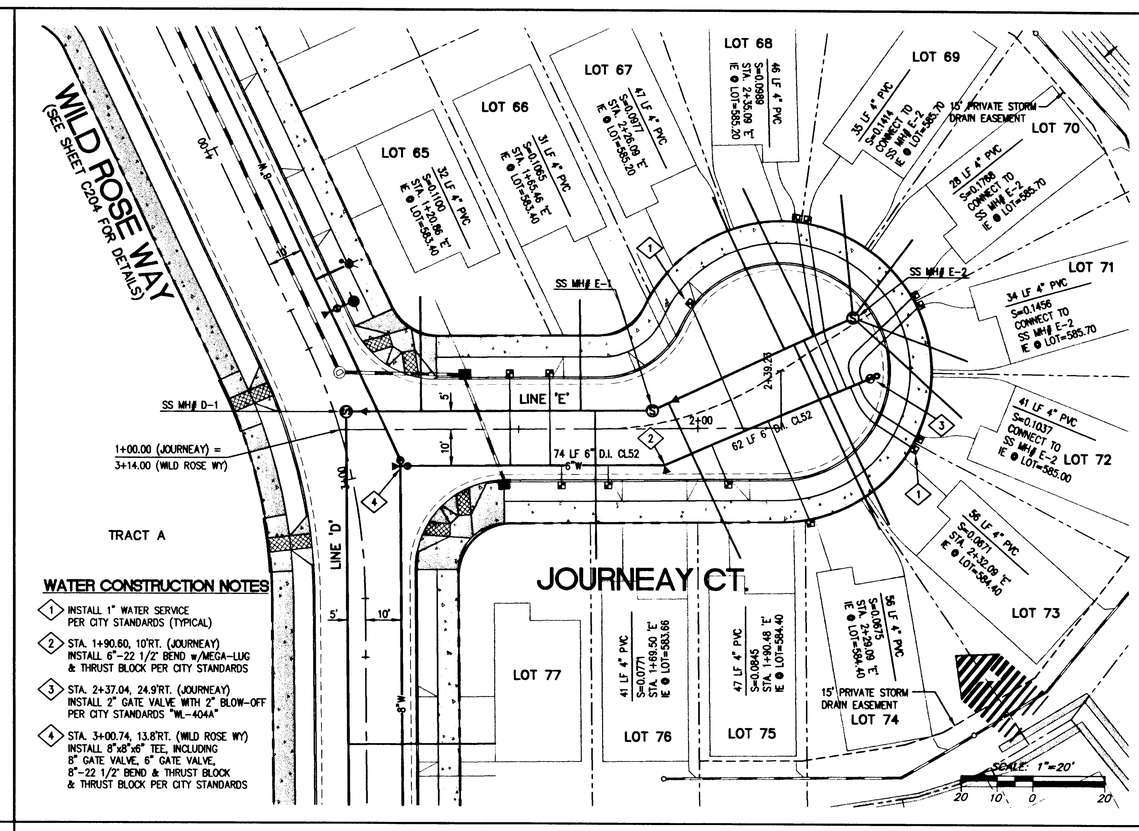

WATER CONSTRUCTION NOTES

1. INSTALL 1" WATER SERVICE PER CITY STANDARDS (TYPICAL)
2. STA. 1+90.60, 10'RT. (JOURNEAY) INSTALL 6"-22 1/2° BEND w/MEGA-LUG & THRUST BLOCK PER CITY STANDARDS
3. STA. 2+37.04, 24.9'RT. (JOURNEAY) INSTALL 2" GATE VALVE WITH 2" BLOW-OFF PER CITY STANDARDS "WL-404A"
4. STA. 3+00.74, 13.8'RT. (WILD ROSE WY) INSTALL 8"x8"x6" TEE, INCLUDING 8" GATE VALVE, 6" GATE VALVE, 8"-22 1/2° BEND & THRUST BLOCK & THRUST BLOCK PER CITY STANDARDS

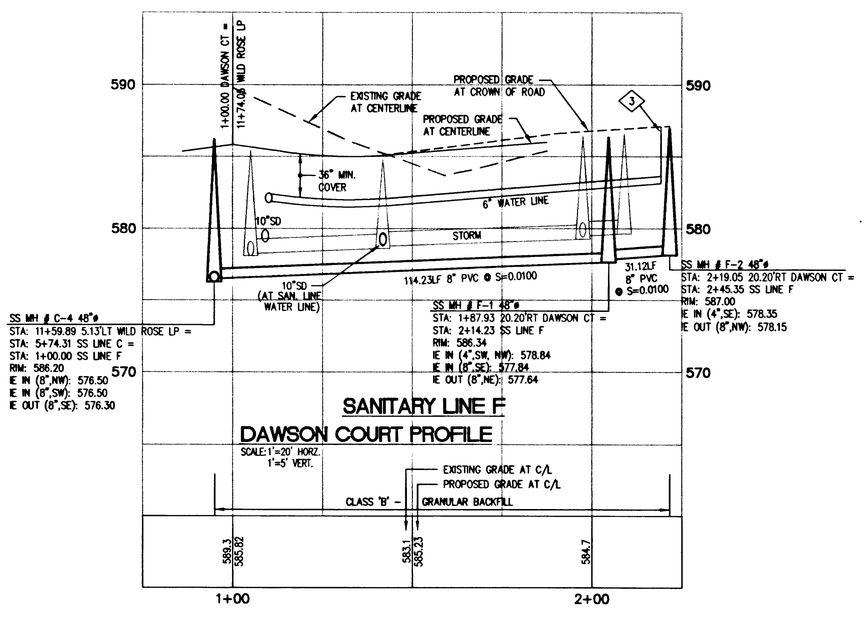

SANITARY LINE F
DAWSON COURT PROFILE

SCALE: 1"=20' HORZ.
1"=5' VERT.

EXISTING GRADE AT C/L
PROPOSED GRADE AT C/L
CLASS 'B' - GRANULAR BACKFILL

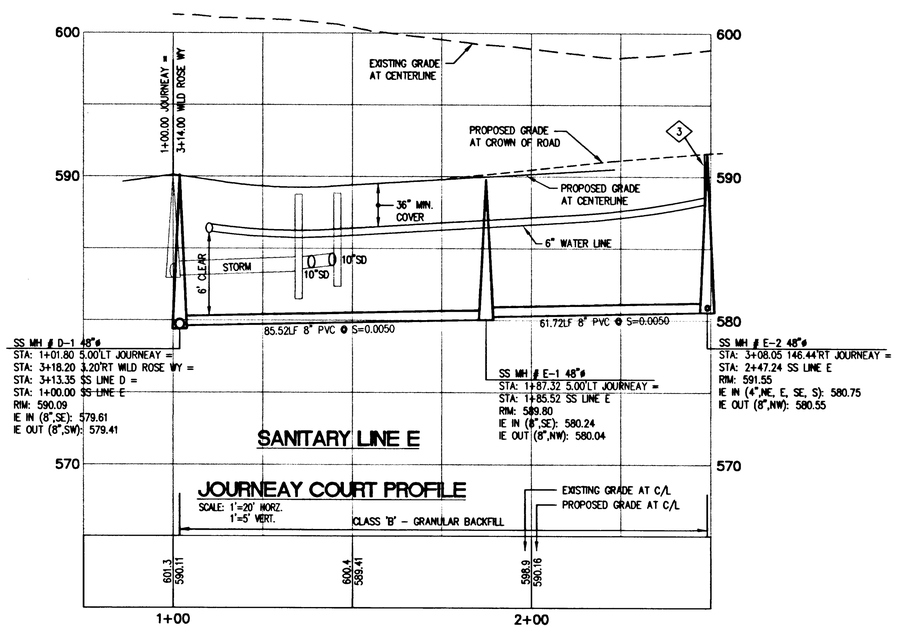

SANITARY LINE E
JOURNEAY COURT PROFILE

SCALE: 1"=20' HORZ.
1"=5' VERT.

CLASS 'B' - GRANULAR BACKFILL
EXISTING GRADE AT C/L
PROPOSED GRADE AT C/L

WRG DESIGN
5415 S.W. Westgate Dr., Suite 100
Portland, Oregon 97221
☎ 503 | 419-2500 FAX: 503 | 419-2600
PLANNERS • ENGINEERS • LANDSCAPE ARCHITECTS • SURVEYORS

REGISTERED PROFESSIONAL ENGINEER 19,172 OREGON JULY 15, 1997 RANDALL S. DYER
EXPIRES: 12/31/03

MACKENZIE AND ROSE COURTS SAN./WATER PLAN
MACKENZIE ROSE ESTATES - P.U.D.

WEST LINN, OREGON

J.T. SMITH COMPANIES
AN S. J. T. J. S. FAMILY
22400 SALAMY ROAD, SUITE 204
WEST LINN, OREGON 97068

RECORD DRAWING
11/26/2001

THESE RECORD DRAWINGS HAVE BEEN PREPARED, IN PART, ON THE BASIS OF INFORMATION COMPILED AND FURNISHED BY THE CONTRACTOR, REVISED CONSTRUCTION PLANS, AND FIELD OBSERVATIONS DURING CONSTRUCTION.

PROJECT NO. JTS007

DATE	01/25/01
DRAFTED	D. LAVOIE
DESIGNED	J NEMEC
ENGINEER	R. DYER
CHECKED	

SHEET TITLE
SANITARY SEWER & WATER

SHEET NUMBER
C205

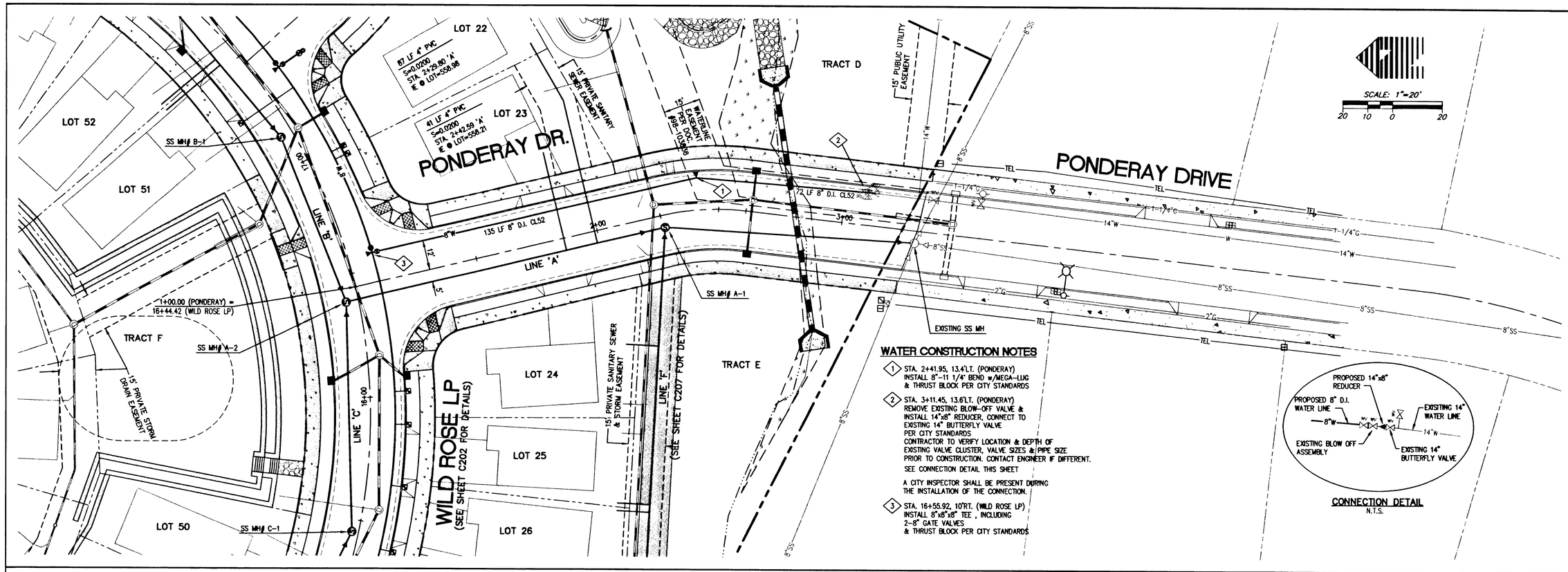

WATER CONSTRUCTION NOTES

1. STA. 2+41.95, 13.4'LT. (PONDERAY)
   INSTALL 8"-11 1/4" BEND w/MEGA-LUG
   & THRUST BLOCK PER CITY STANDARDS
2. STA. 3+11.45, 13.6'LT. (PONDERAY)
   REMOVE EXISTING BLOW-OFF VALVE &
   INSTALL 14"x8" REDUCER, CONNECT TO
   EXISTING 14" BUTTERFLY VALVE
   PER CITY STANDARDS
   CONTRACTOR TO VERIFY LOCATION & DEPTH OF
   EXISTING VALVE CLUSTER, VALVE SIZES &/PIPE SIZE
   PRIOR TO CONSTRUCTION. CONTACT ENGINEER IF DIFFERENT.
   SEE CONNECTION DETAIL THIS SHEET

   A CITY INSPECTOR SHALL BE PRESENT DURING
   THE INSTALLATION OF THE CONNECTION.
3. STA. 16+55.92, 10'RT. (WILD ROSE LP)
   INSTALL 8"x8"x8" TEE , INCLUDING
   2-8" GATE VALVES
   & THRUST BLOCK PER CITY STANDARDS

CONNECTION DETAIL
N.T.S.

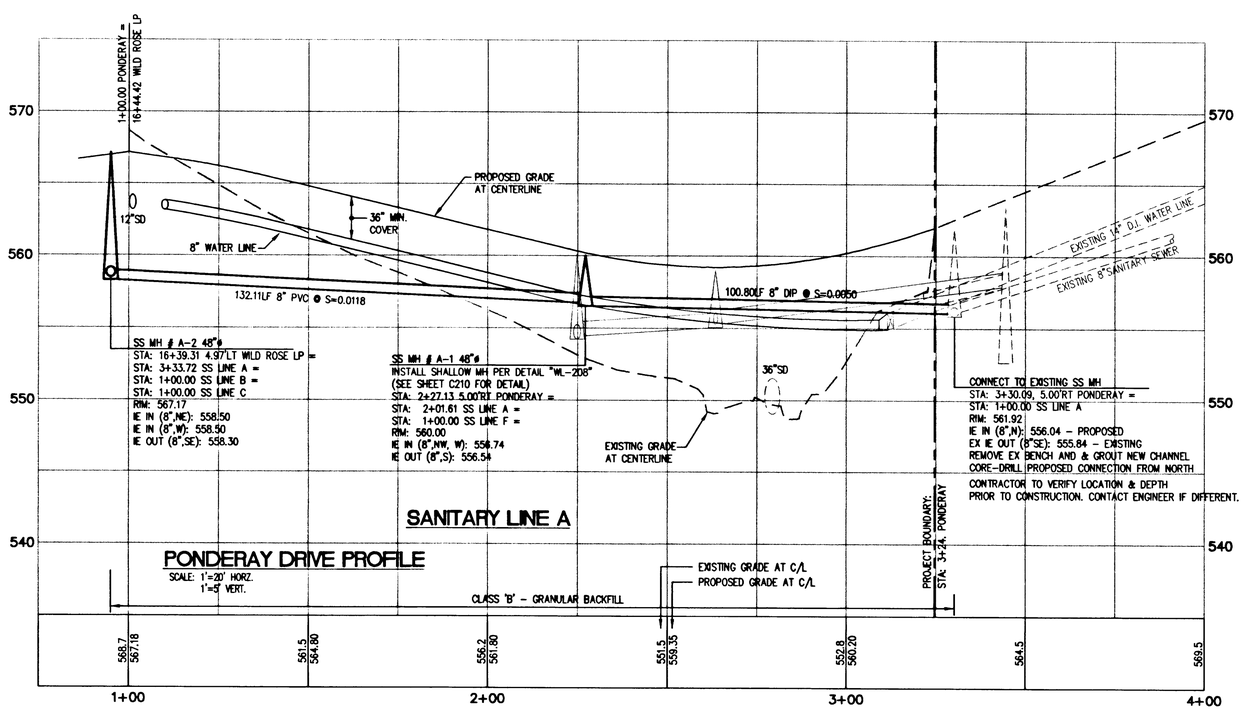

PONDERAY DRIVE PROFILE

SCALE: 1'=20' HORZ.
1'=5' VERT.

W R G DESIGN INC
5415 S.W. Westgate Dr., Suite 100
Portland, Oregon 97221
☎ 503|419-2500 FAX: 503|419-2600
PLANNERS • ENGINEERS • LANDSCAPE ARCHITECTS • SURVEYORS

REGISTERED PROFESSIONAL ENGINEER 19,172 OREGON JULY 15, 1997 RANDALL S. DYER
EXPIRES: 12/31/03

PONDERAY DRIVE SANITARY + WATER PLAN
MACKENZIE ROSE ESTATES - P.U.D.

WEST LINN, OREGON

J.T. SMITH COMPANIES
REAL ESTATE DEVELOPMENT
22400 SALAMO ROAD, SUITE 204
WEST LINN, OREGON 97068

RECORD DRAWING
11/26/2001

THESE RECORD DRAWINGS HAVE BEEN PREPARED, IN PART, ON THE BASIS OF INFORMATION COMPILED AND FURNISHED BY THE CONTRACTOR, REVISED CONSTRUCTION PLANS, AND FIELD OBSERVATIONS DURING CONSTRUCTION.

PROJECT NO.
JTS007

DATE	01/25/01
DRAFTED	D. LAVOIE
DESIGNED	J NEMEC
ENGINEER	R. DYER
CHECKED	

SHEET TITLE
SANITARY SEWER & WATER

SHEET NUMBER
C206

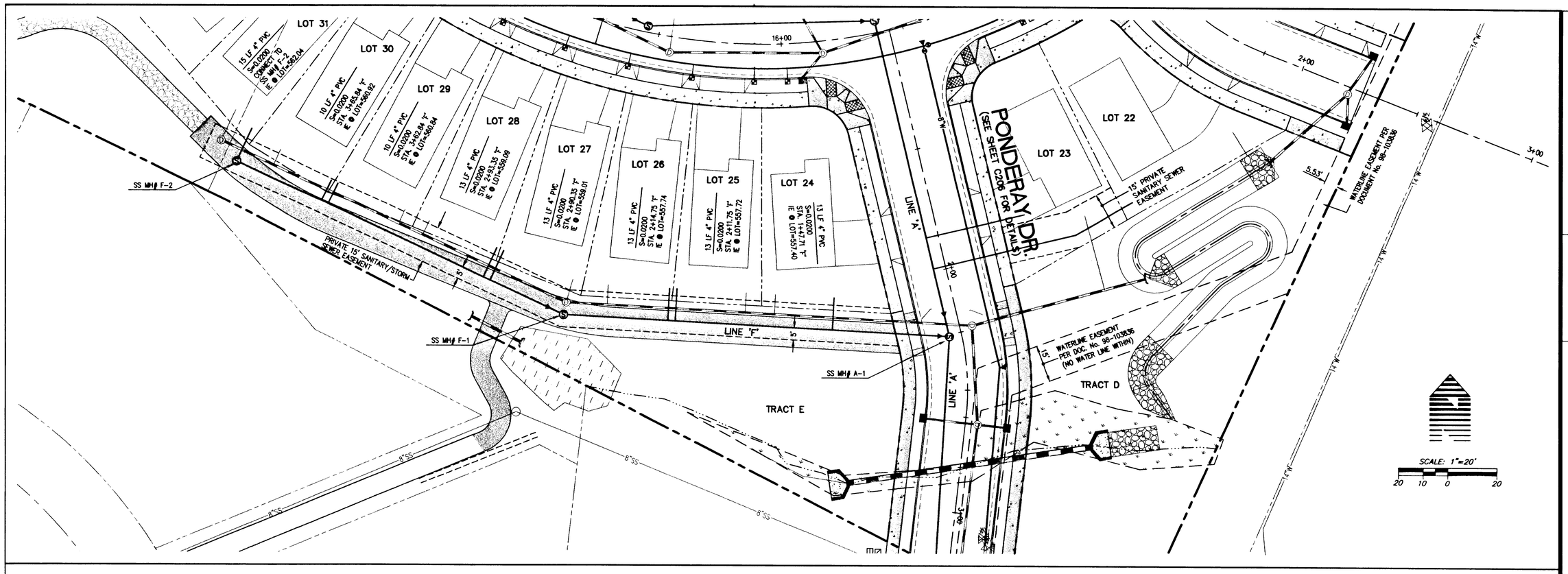

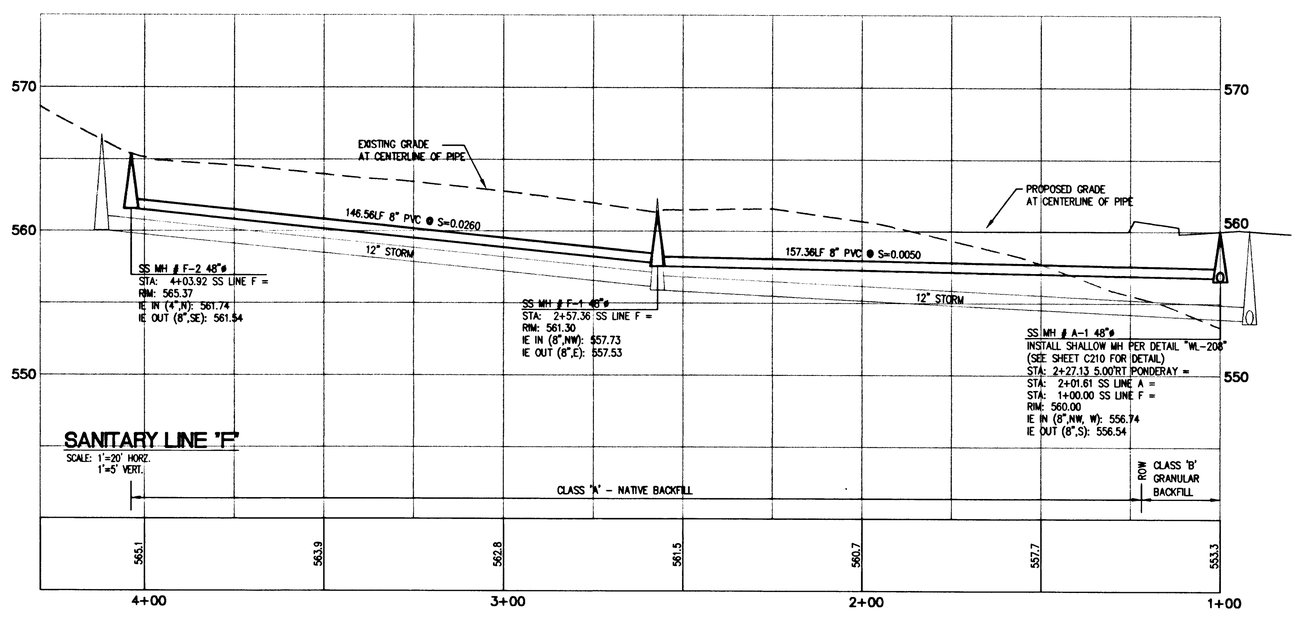

WRG DESIGN INC
5415 S.W. Westgate Dr., Suite 100
Portland, Oregon 97221
☎ 503 | 419-2500 FAX: 503 | 419-2600
PLANNERS • ENGINEERS • LANDSCAPE ARCHITECTS • SURVEYORS

REGISTERED PROFESSIONAL ENGINEER 19,172 OREGON JULY 15, 1997 RANDALL S. DYER
EXPIRES: 12/31/03

SANITARY SEWER LINE 'F' PLAN
MACKENZIE ROSE ESTATES - P.U.D.
WEST LINN, OREGON

J.T. SMITH COMPANIES
REAL ESTATE DEVELOPMENT
22400 SALAMO ROAD, SUITE 204
WEST LINN, OREGON 97068

RECORD DRAWING
11/26/2001
THESE RECORD DRAWINGS HAVE BEEN PREPARED, IN PART, ON THE BASIS OF INFORMATION COMPILED AND FURNISHED BY THE CONTRACTOR, REVISED CONSTRUCTION PLANS, AND FIELD OBSERVATIONS DURING CONSTRUCTION.

PROJECT NO. JTS007

DATE	01/25/01
DRAFTED	D. LAVOIE
DESIGNED	J NEMEC
ENGINEER	R. DYER
CHECKED	

SHEET TITLE
SANITARY SEWER

SHEET NUMBER
C207

J:\DATA\JTS007\Autocad\AS-BUILTS\AB-CD-BASE.dwg Wed Nov 21 11:13:32 2001 DGL

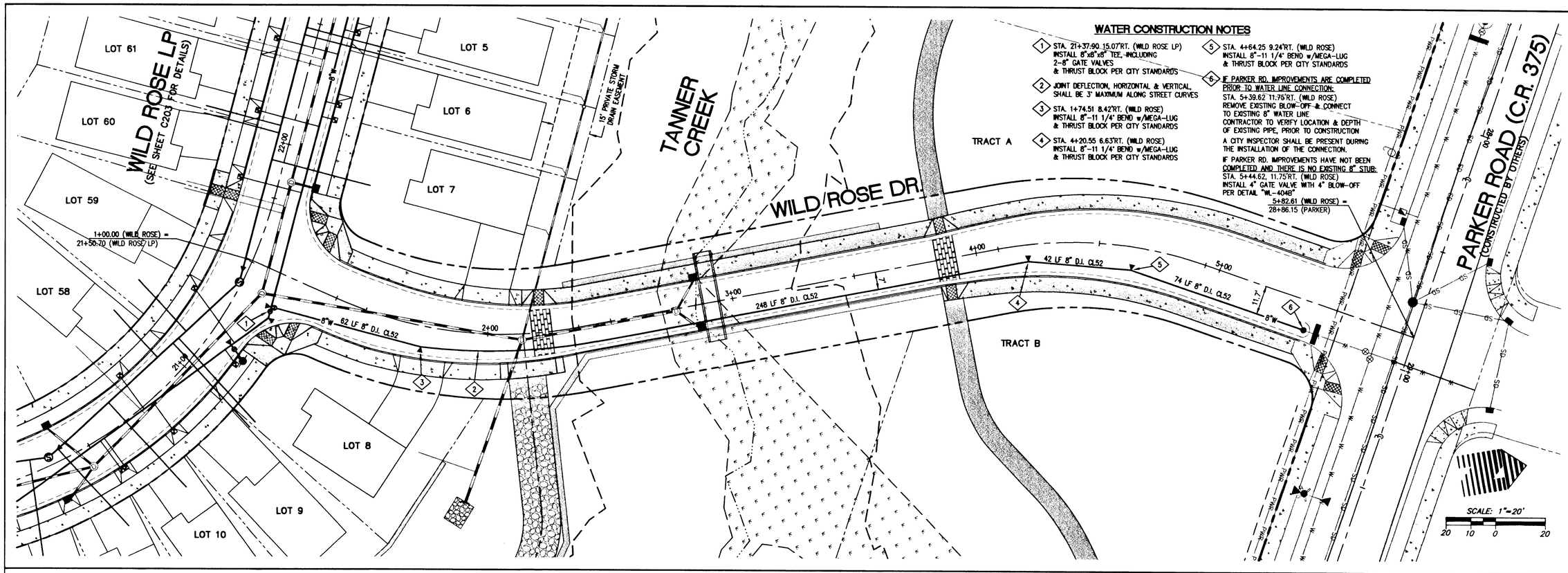

WATER CONSTRUCTION NOTES

1. STA. 21+37.90 15.07'RT. (WILD ROSE LP) INSTALL 8"x8"x8" TEE, INCLUDING 2-8" GATE VALVES & THRUST BLOCK PER CITY STANDARDS
2. JOINT DEFLECTION, HORIZONTAL & VERTICAL, SHALL BE 3° MAXIMUM ALONG STREET CURVES
3. STA. 1+74.51 8.42'RT. (WILD ROSE) INSTALL 8"-11 1/4° BEND w/MEGA-LUG & THRUST BLOCK PER CITY STANDARDS
4. STA. 4+20.55 6.63'RT. (WILD ROSE) INSTALL 8"-11 1/4° BEND w/MEGA-LUG & THRUST BLOCK PER CITY STANDARDS
5. STA. 4+64.25 9.24'RT. (WILD ROSE) INSTALL 8"-11 1/4° BEND w/MEGA-LUG & THRUST BLOCK PER CITY STANDARDS
6. IF PARKER RD. IMPROVEMENTS ARE COMPLETED PRIOR TO WATER LINE CONNECTION: STA. 5+39.62 11.75'RT. (WILD ROSE) REMOVE EXISTING BLOW-OFF & CONNECT TO EXISTING 8" WATER LINE CONTRACTOR TO VERIFY LOCATION & DEPTH OF EXISTING PIPE, PRIOR TO CONSTRUCTION

A CITY INSPECTOR SHALL BE PRESENT DURING THE INSTALLATION OF THE CONNECTION.

IF PARKER RD. IMPROVEMENTS HAVE NOT BEEN COMPLETED AND THERE IS NO EXISTING 8" STUB: STA. 5+44.62, 11.75'RT. (WILD ROSE) INSTALL 4" GATE VALVE WITH 4" BLOW-OFF PER DETAIL "WL-404B"

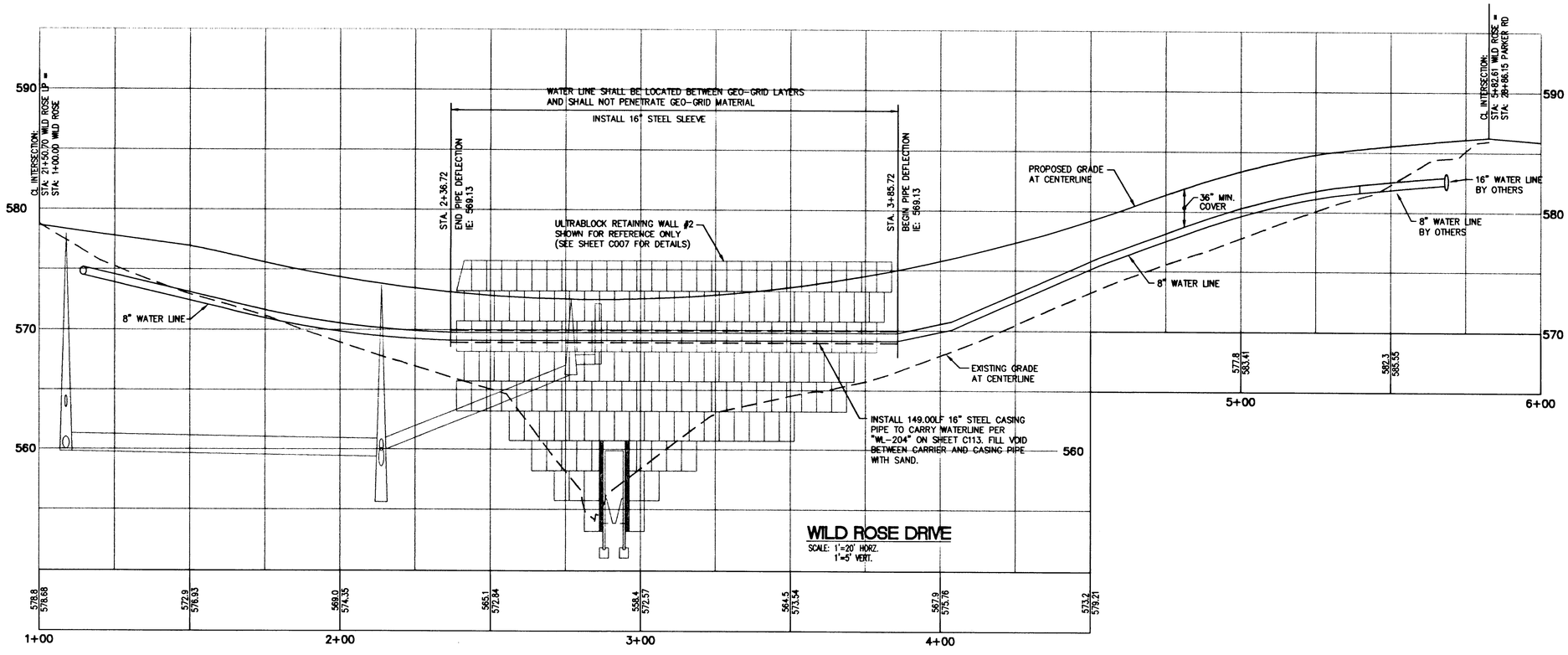

WILD ROSE DRIVE

SCALE: 1"=20' HORZ.
1"=5' VERT.

WRG DESIGN
5415 S.W. Westgate Dr., Suite 100
Portland, Oregon 97221
☎ 503 | 419-2500 FAX: 503 | 419-2600
PLANNERS • ENGINEERS • LANDSCAPE ARCHITECTS • SURVEYORS

REGISTERED PROFESSIONAL ENGINEER 19,172 OREGON JULY 15, 1997 RANDALL S. DYER
EXPIRES: 12/31/03

WILD ROSE DRIVE WATER PLAN
MACKENZIE ROSE ESTATES - P.U.D.
WEST LINN, OREGON

J.T. SMITH COMPANIES
REAL ESTATE DEVELOPERS
22400 SALAMO ROAD, SUITE 204
WEST LINN, OREGON 97068

RECORD DRAWING
11/26/2001

THESE RECORD DRAWINGS HAVE BEEN PREPARED, IN PART, ON THE BASIS OF INFORMATION COMPILED AND FURNISHED BY THE CONTRACTOR, REVISED CONSTRUCTION PLANS, AND FIELD OBSERVATIONS DURING CONSTRUCTION.

PROJECT NO. JTS007

DATE	01/25/01
DRAFTED	D. LAVOIE
DESIGNED	J NEMEC
ENGINEER	R. DYER
CHECKED	

SHEET TITLE: WATER

SHEET NUMBER: C208

J:\DATA\JTS007\Autocad\AS-BUILTS\AB-CD-BASE.dwg Wed Nov 21 11:06:46 2001 DGL

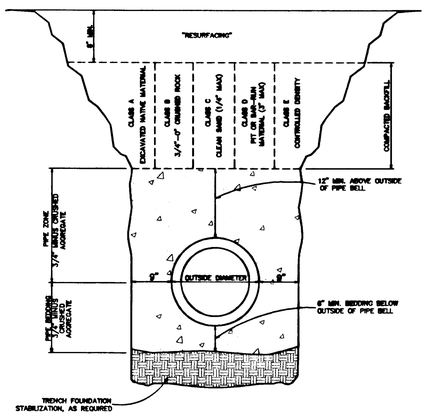

Trench Backfill, Bedding and Pipe Zone

West Linn | DATE: JAN 2000 | DRAWING NO: WL-200 | FILE NO: 00-200

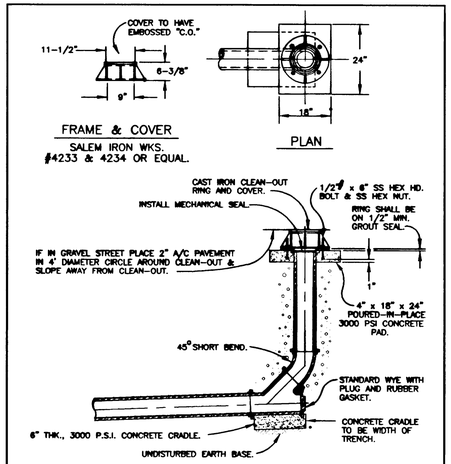

Standard Clean Out

West Linn | DATE: JAN 2000 | DRAWING NO: WL-206 | FILE NO: 00-206

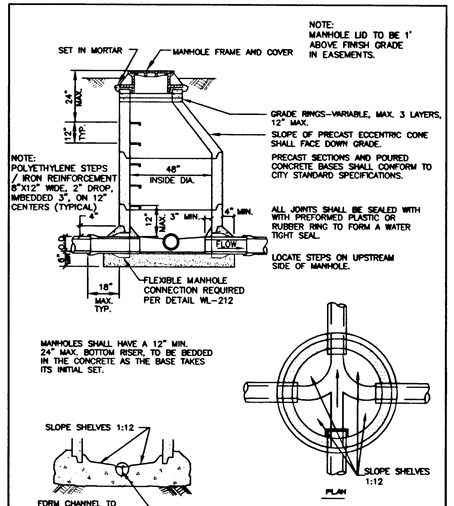

NOTE: CHANNELS MUST BE ABLE TO PASS A 7"X30" CYLINDER INTO PIPES. SHELF SHALL NOT BE BELOW THE TOP OF THE PIPE.

Standard Manhole for Less than 36" Pipe

West Linn | DATE: JAN 2000 | DRAWING NO: WL-207 | FILE NO: 00-207

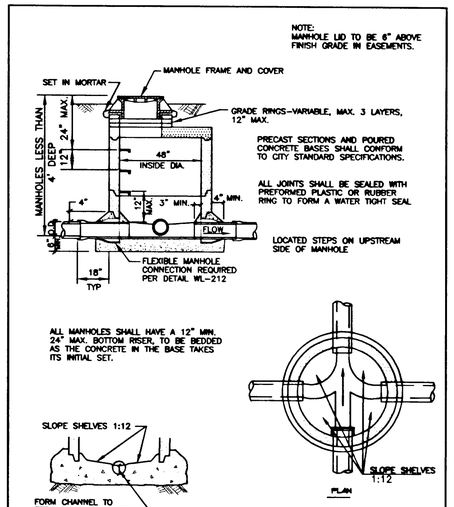

NOTE: CHANNELS MUST BE ABLE TO PASS A 7"X30" CYLINDER INTO PIPES. SHELF SHALL NOT BE BELOW SPRING LINE OF THE PIPE.

Shallow Manhole for Less than 36" Pipe

West Linn | DATE: JAN 2000 | DRAWING NO: WL-208 | FILE NO: 00-208

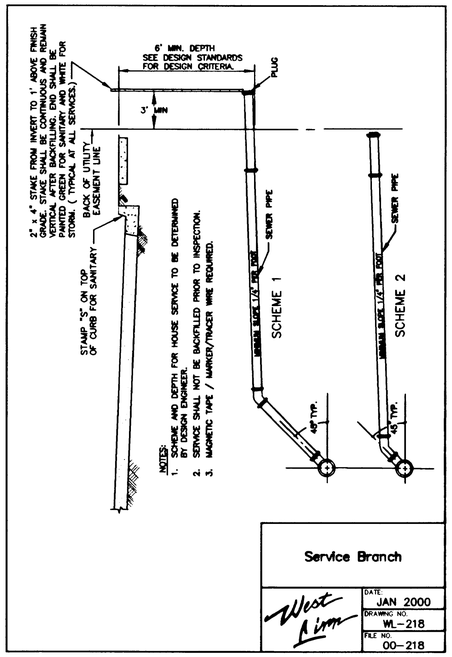

Service Branch

West Linn | DATE: JAN 2000 | DRAWING NO: WL-218 | FILE NO: 00-218

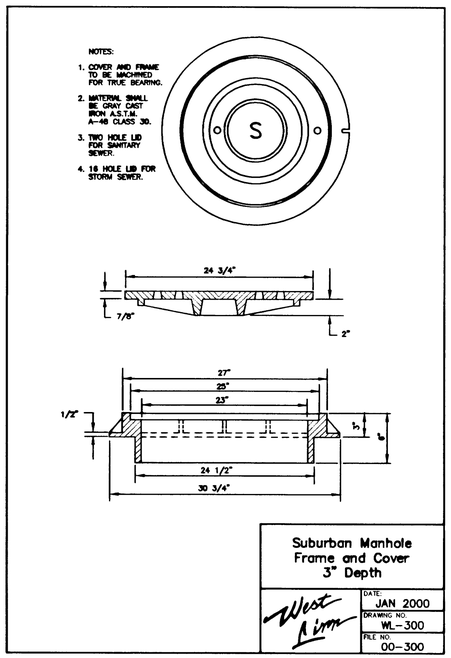

Suburban Manhole Frame and Cover 3" Depth

West Linn | DATE: JAN 2000 | DRAWING NO: WL-300 | FILE NO: 00-300

WRG DESIGNING
5415 S.W. Westgate Dr., Suite 100
Portland, Oregon 97221
☎ 503 | 419-2500 FAX: 503 | 419-2600
PLANNERS ■ ENGINEERS ■ LANDSCAPE ARCHITECTS ■ SURVEYORS

REGISTERED PROFESSIONAL ENGINEER 19,172 OREGON JULY 15, 1997 RANDALL S. DYER
EXPIRES: 12/31/03

SANITARY SEWER DETAILS
MACKENZIE ROSE ESTATES - P.U.D.
WEST LINN, OREGON

J.T. SMITH COMPANIES
PLAN SUITE 20-ELLIWNER
22900 SALAMO ROAD, SUITE 204
WEST LINN, OREGON 97068

RECORD DRAWING
11/26/2001
THESE RECORD DRAWINGS HAVE BEEN PREPARED, IN PART, ON THE BASIS OF INFORMATION COMPILED AND FURNISHED BY THE CONTRACTOR, REVISED CONSTRUCTION PLANS, AND FIELD OBSERVATIONS DURING CONSTRUCTION.

PROJECT NO. JTS007
DATE 01/25/01
DRAFTED D. LAVOIE
DESIGNED J NEMEC
ENGINEER R. DYER
CHECKED

SHEET TITLE: SANITARY SEWER DETAILS
SHEET NUMBER: C210

J:\DATA\JTS007\AutoCad\AS-BUILTS\MF-DETAILS.DWG WED NOV 21 12:34:27 2001 DBL

NOTES:

1. HYDRANTS TO BE MUELLER CENTURION MDL A-423 ONLY WITH 1 1/2" OPER. NUTS OR CLOW MEDDALION F-2545.
2. HYDRANT COLOR TO BE MILLER EQUIP. ENAMEL O E 40 (SAFETY YELLOW).
3. JOINTS TO BE RESTRAINED BY 3/4" DIA. GALVANIZED STEEL RODS AND THRUST BLOCKS OR MEGA LUGS AND THRUST BLOCKS.
4. ALL FITTINGS IN CONTACT W/CONCRETE SHALL BE WRAPPED IN PLASTIC. HYDRANT DRAIN HOLES TO REMAIN OPEN TO DRAIN ROCK AND OPERATIONAL.
5. MIN. 4 CU. FT. OF 1 1/2"-3/4" CLEAN DRAIN ROCK SHALL BE PLACED AROUND SHOE UP TO A MIN. OF 6" ABOVE DRAIN OUTLETS.
6. WHERE PLANTER STRIP EXISTS, HYDRANT SHALL BE PLACED SO FRONT PORT IS A MINIMUM OF 24" BEHIND FACE OF CURB.
7. WHERE INTEGRAL S/W & CURB EXISTS, HYD. SHALL BE PLACED AT BACK OF SIDEWALK, OR AS DIRECTED BY ENGINEER.
8. BURY OF HYDRANT SHALL BE MEASURED FROM FINISHED GRADE TO BOTTOM OF CONNECTING PIPE.
9. THRUST BLOCK AT FIRE HYDRANT TEE SHALL HAVE A 3.7 SQ. FT. BEARING AREA.
10. HYDRANT VALVE SHALL BE MUELLER RESILIENT WEDGE GATE VALVE #A-2360-16 ONLY.
11. WHERE NO SIDEWALK EXISTS, PLACE A 5'x 5'x 4" THICK A.C. OR CONC. APRON AROUND HYDRANT.
12. NO EXTENTIONS ALLOWED.

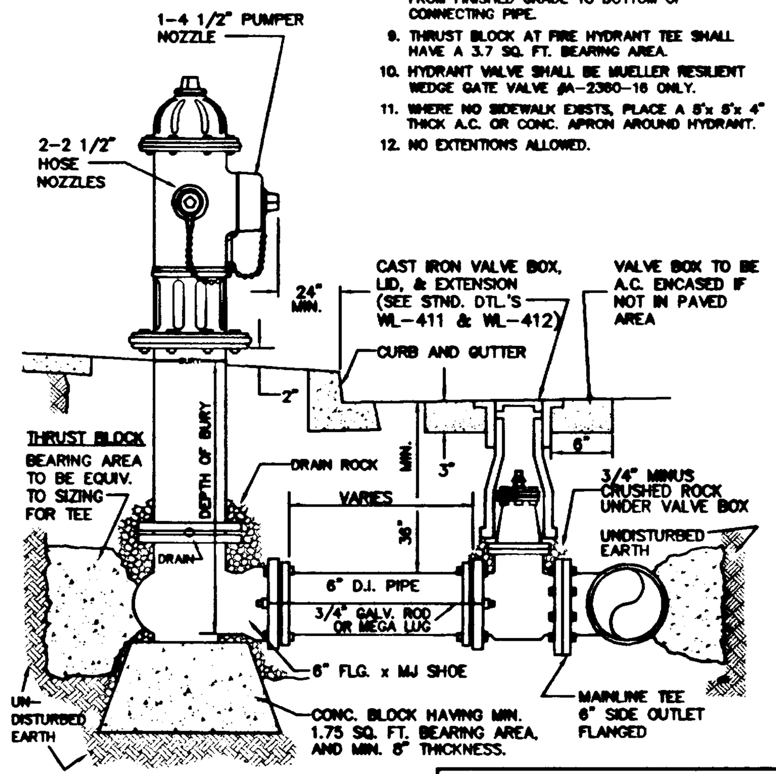

Standard Fire Hydrant Assembly

West Linn | DATE: JAN 2000 | DRAWING NO. WL-401 | FILE NO. 00-401

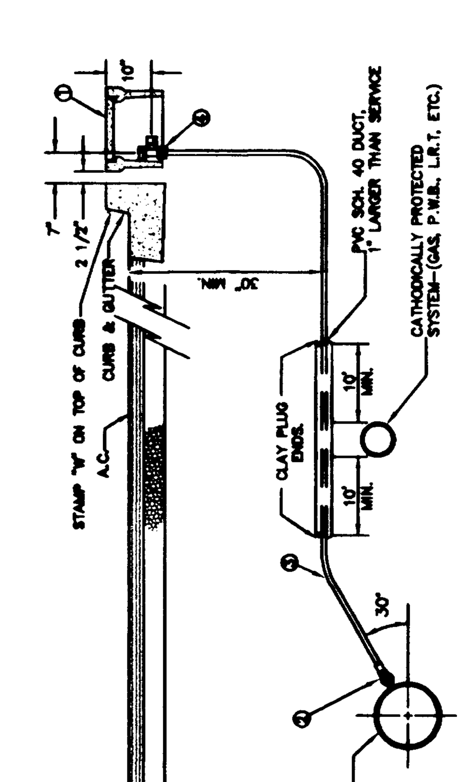

MATERIALS:

1. BROOKS METER BOX, BODY NO. 37, LID AND COVER NO. 37-S.
2. MUELLER CORP. STOP NO. H-15008 OR FORD F1000-4Q SET CORP. STOP WITH OPERATING NUT AT 3 OR 9 O'CLOCK.
3. 1" SOFT TEMPER, TYPE 'K' COPPER TUBING COMPLYING WITH ASTM B-88.
4. MUELLER ANGLE METER STOP NO. H-14258 (FORD NO. KV43-444W-Q).

NOTES:

1. SUBSTITUTES FOR ANY MATERIALS SHOWN SHALL BE APPROVED BY THE CITY ENGINEER.
2. ALL PIPE AND STRUCTURE ZONES SHALL BE BACKFILLED USING 3/4" MINUS CRUSHED AGG. AND COMPACTED TO 95% MAX DENSITY AS DETERMINED BY AASHTO T-180.
3. WHEN AN ACTIVE CATHODIC PROTECTED SYSTEM IS ENCOUNTERED, SCH. 40 PVC SHALL BE INSTALLED AS SHOWN ABOVE WITH CLAY PLUG.
4. METER BOX SHALL BE CENTERED OVER THE COMPLETED METER ASSEMBLY.
5. FOR VACANT RESIDENTIAL LOTS, LOCATE SINGLE SERVICE 18" INSIDE SIDE LOT LINE.
6. TAPS INTO MAIN TO BE AT 18" CENTERLINE MIN.
7. ANGLE METER STOPS TO BE 18" FROM PROPERTY LINE AND NOT IN DRIVEWAY APPROACH.

Standard 1" Water Service

West Linn | DATE: JAN 2000 | DRAWING NO. WL-402 | FILE NO. 00-402

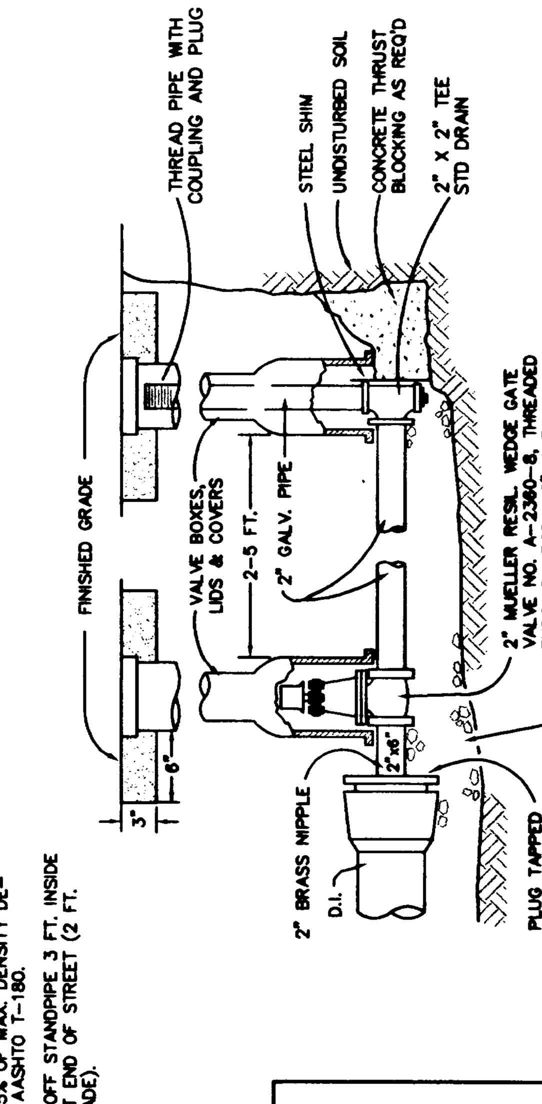

NOTES:

1. VALVE BOX SHALL BE PER STANDARD DETAIL WL-411.
2. VALVE BOX TO BE ASPHALT ENCASED AS SHOWN, IF NOT IN PAVED AREA.
3. BLOW-OFF UNIT SHALL BE BACKFILLED WITH 3/4"-0" CRUSHED ROCK AND COMPACTED TO 95% OF MAX. DENSITY DETERMINED BY AASHTO T-180.
4. PLACE BLOW-OFF STANDPIPE 3 FT. INSIDE R.O.W. LINE AT END OF STREET (2 FT. FROM BARRICADE).

Standard 2" Blow-off Assembly

West Linn | DATE: JAN 2000 | DRAWING NO. WL-404A | FILE NO. 00-404A

BLOW-OFF SIZES REQUIRED	
MAIN SIZE	BLOW-OFF SIZE
4" TO 6"	2"
8" TO 12"	4"
14" TO 18"	6"
20" & UP	PER ENGR.

NOTES:

1. BACKFILL WITH SELECT CRUSHED AGGREGATE A MINIMUM OF 6" ON ALL SIDES.
2. ON TEMPORARY BLOW-OFFS ONLY, AN MJ CAP TAPPED 4" OR 6" MAY BE SUBSTITUTED FOR REDUCER.
3. TEMPORARY BLOW-OFF IS ONE REMOVED AT THE END OF PROJECT CONSTRUCTION. A PERMANENT BLOW-OFF REMAINS ON THE PROJECT AFTER ACCEPTANCE.
4. PLACE BLOW-OFF STANDPIPE 3 FT. INSIDE R.O.W. LINE AT END OF STREET (2FT. FROM BARRICADE).

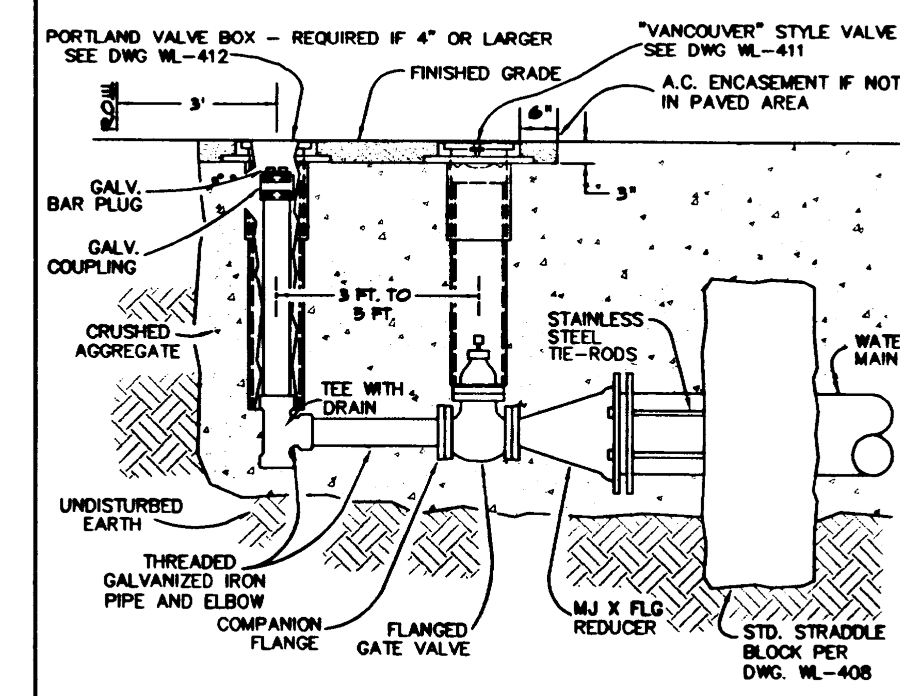

Permanent or Temporary 4" & 6" Blow-off

West Linn | DATE: JAN 2000 | DRAWING NO. WL-404B | FILE NO. 00-404B

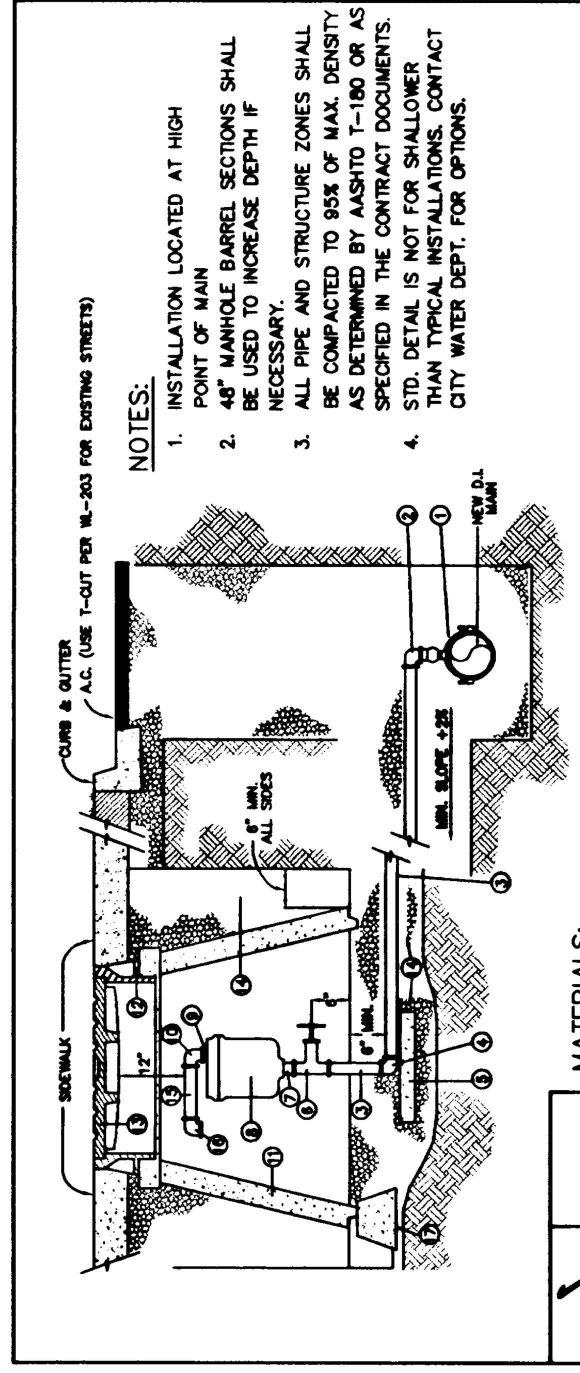

NOTES:

1. INSTALLATION LOCATED AT HIGH POINT OF MAIN
2. 48" MANHOLE BARREL SECTIONS SHALL BE USED TO INCREASE DEPTH IF NECESSARY.
3. ALL PIPE AND STRUCTURE ZONES SHALL BE COMPACTED TO 95% OF MAX. DENSITY AS DETERMINED BY AASHTO T-180 OR AS SPECIFIED IN THE CONTRACT DOCUMENTS.
4. STD. DETAIL IS NOT FOR SHALLOWER THAN TYPICAL INSTALLATIONS. CONTACT CITY WATER DEPT. FOR OPTIONS.

MATERIALS:

1. ROCKWELL NO. 317 SERVICE SADDLE WITH STAINLESS STRAPS
2. MUELLER NO. H15045 2" CORPORATION STOP WITH 1/4 BEND ADAPT (I.P.T. MUELLER 110 CTS)
3. 2" X VARIABLE LENGTH BRASS I.P.T. NIPPLE
4. 2" BRASS 90 DEGREE ELL (MUELLER 110 CTS)
5. 12" X 12" X 4" CONCRETE BLOCK
6. NIBCO NO. 113 2" BRASS GATE VALVE
7. 2" X 3" BRASS I.P.T. NIPPLE
8. 2" AIR RELEASE VALVE (VAL-MATIC #38 OR APCO #205 FOR TYPICAL INSTALLATIONS, IN SOME INSTANCES THE CITY MAY REQUIRE COMBINATION AIR RELEASE & VACUUM UNIT.) INSTALL WALL BRACKETS TO SUPPORT VALVE AS NECESSARY.
9. 1/2" X 1 1/2" OR 2" X 1 1/2" BRASS I.P.T. NIPPLE
10. 1/2" OR 2" BRASS 90 DEGREE ELL (F.M. I.P.T. X F.M. I.P.T.)
11. STD. 48" CONCRETE MANHOLE CONE
12. FRAME PER STD. DWG. WL-214.
13. TAMPERPROOF MANHOLE COVER PER STD. DWG. WL-214.
14. 3/4" MINUS CRUSHED AGG.
15. 1/2" X 6" OR 2" X 6" BRASS NIPPLE, I.P.T.
16. 1/2" OR 2" BRASS 90 DEGREE ELL WITH SCREEN ON OUTLET
17. 3 EA. 12" CONCRETE PIER BLOCKS

Standard Air Release Valve Unit

West Linn | DATE: JAN 2000 | DRAWING NO. WL-405 | FILE NO. 00-405

FITTING SIZE (Inches)	TEE, WYE, & ① HYDRANTS	STRADDLE BLOCK ②	90° BEND ③ PLUGGED CROSS TEE PLUGGED-RUNS	45° BEND ④	22 1/2° BEND ④	11 1/2° BEND ④
2	*	*	*	*	*	*
4	1.7	2.1	2.4	1.3	*	*
6	3.7	4.9	5.3	2.9	1.5	*
8	6.7	8.7	9.5	5.1	2.7	1.3
10	10.5	13.6	14.8	8	4.1	2
12	15.1	19.6	21.3	11.6	5.9	2.9
14						
16	26.8	34.8	37.9	20.5	10.4	5.2
18	33.9	44	47.9	25.9	12.8	6.7
LARGER	* *	* *	* *	* *	* *	* *
BEARING AREA OF THRUST BLOCKS (sq. ft.)						

1. ALL VALUES ARE BASED ON THE FOLLOWING ASSUMPTIONS: AVG. PRESSURE = 100 PSI X 2 (safety factor); 1500 PSF SOIL BEARING CAPACITY; NORMAL DISTRIBUTION DESIGN VELOCITY NOT TO EXCEED 5 F/S.
2. ALL FITTINGS SHALL BE WRAPPED IN PLASTIC PRIOR TO PLACEMENT OF CONCRETE.
3. BEARING SURFACE OF THRUST BLOCKING SHALL BE AGAINST UNDISTURBED SOIL.
4. ALL CONCRETE MIX SHALL HAVE A MIN. 28 DAY STRENGTH OF 3000 PSI.
5. ALL PIPE ZONES SHALL BE GRAVEL FILLED AND COMPACTED.
6. THRUST BLOCKS FOR PLUGGED CROSS AND PLUGGED TEE SHALL HAVE #4 REBAR LIFTING LOOPS INSTALLED AS SHOWN.
7. VERTICAL THRUST DETAILS-SEE DWG. WL-407.
8. STRADDLE BLOCK DETAILS-SEE DWG. WL-408.

* BLOCK TO UNDISTURBED TRENCH WALLS

** THRUST BLOCKS FOR PIPES LARGER THAN 18" WILL BE INDIVIDUALLY DESIGNED BY THE ENGINEER.

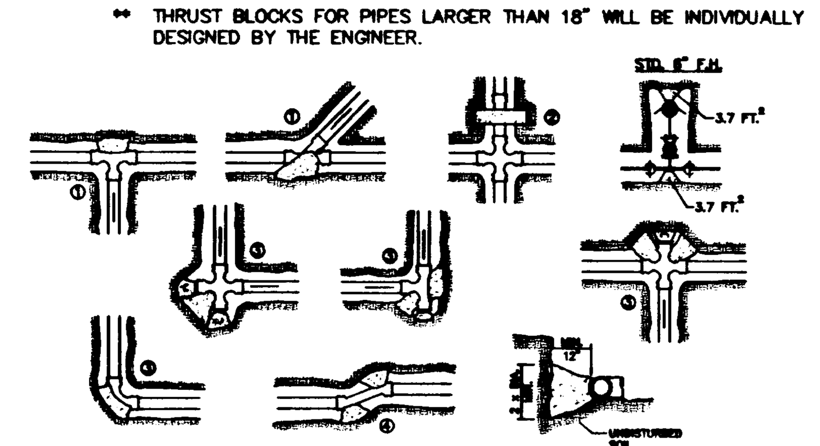

Horizontal Thrust Blocking

West Linn | DATE: JAN 2000 | DRAWING NO. WL-406 | FILE NO. 00-406

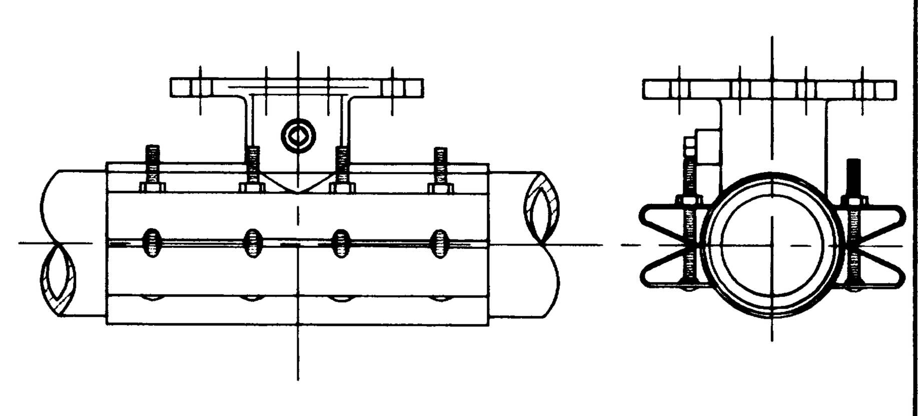

NOTES:

1. WATER MAIN SHALL BE CLEANED BEFORE ATTACHING SLEEVE.
2. SLEEVE AND VALVE SHALL BE PRESSURE TESTED BEFORE MAKING TAP.
3. PRESSURE TEST AND TAP SHALL BE MADE IN THE PRESENCE OF AN AUTHORIZED CITY REPRESENTATIVE.
4. PROPER TAPPING MACHINE SHALL BE USED TO MAKE TAP.
5. THRUST BLOCKING REQUIREMENTS SHALL BE DETERMINED BY THE ENGINEER OR PER DWG. WL-406.
6. TAP SHALL BE MADE NO CLOSER THAN 18 INCHES FROM THE NEAREST JOINT.
7. SLEEVE AND VALVE SHALL BE WRAPPED WITH 8 MIL PLASTIC.
8. SLEEVES TO BE USED ARE JCM OR MUELLER STAINLESS STEEL TAPPING SLEEVES. ALL NUTS AND BOLTS SHALL BE STAINLESS STEEL.
9. SLEEVE SHALL BE AS LEVEL AS POSSIBLE.
10. ALL BOLTS SHALL HAVE NEVER SIEZE ON THREADS.

Standard Wet Tap

West Linn | DATE: JAN 2000 | DRAWING NO. WL-410 | FILE NO. 00-410

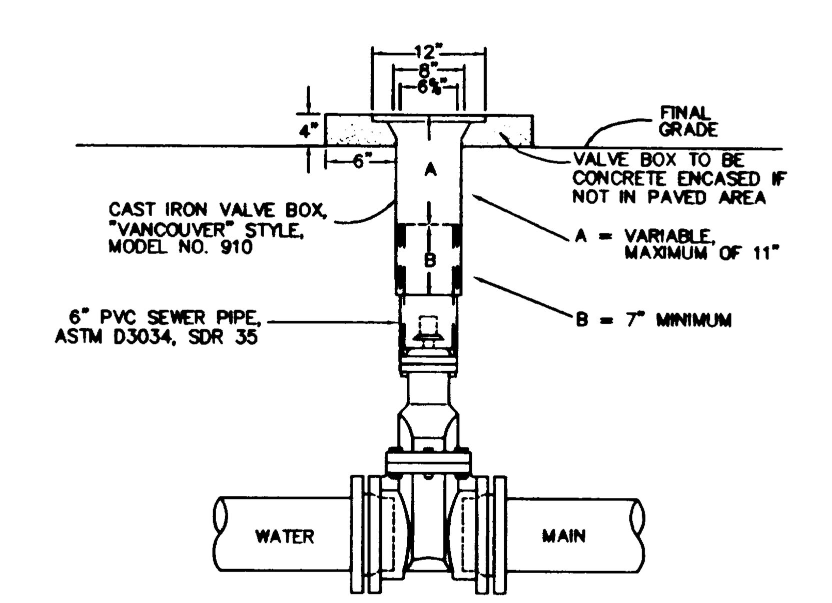

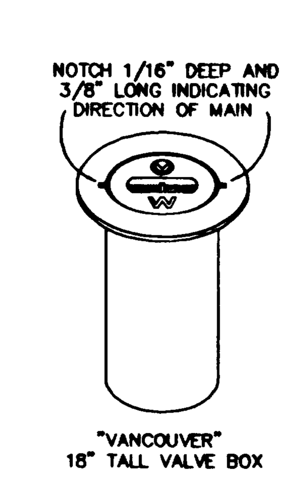

NOTES:

1. VALVE BOXES SHALL BE CENTERED DIRECTLY OVER THE VALVE NUT IN A VERTICAL POSITION.
2. VALVE BOX TOP SHALL BE ADJUSTED TO MEET FINISHED GRADE.
3. PVC SHALL BE ONE CONTINUOUS PIECE- NO BELLS OR COUPLERS.
4. ON VALVES 8" AND LARGER, PVC SHALL BE NOTCHED OVER VALVE PACKING BOLTS SO PVC SITS ON BONNET.

Standard Valve Box Detail

West Linn | DATE: JAN 2000 | DRAWING NO. WL-411 | FILE NO. 00-411

W R G DESIGN INC
5415 S.W. Westgate Dr., Suite 100
Portland, Oregon 97221
503|419-2500 FAX: 503|419-2600
PLANNERS ■ ENGINEERS ■ LANDSCAPE ARCHITECTS ■ SURVEYORS

REGISTERED PROFESSIONAL ENGINEER 19,172 OREGON JULY 15, 1997 RANDALL S. DYER
EXPIRES: 12/31/03

WATER DETAILS
MACKENZIE ROSE ESTATES - P.U.D.
WEST LINN, OREGON

J.T. SMITH COMPANIES
REAL ESTATE DEVELOPMENT 22400 SALAMO ROAD, SUITE 204 WEST LINN, OREGON 97068

RECORD DRAWING
11/26/2001
THESE RECORD DRAWINGS HAVE BEEN PREPARED, IN PART, ON THE BASIS OF INFORMATION COMPILED AND FURNISHED BY THE CONTRACTOR, REVISED CONSTRUCTION PLANS, AND FIELD OBSERVATIONS DURING CONSTRUCTION.

PROJECT NO.
JTS007

DATE 01/25/01
DRAFTED D. LAVOIE
DESIGNED J NEMEC
ENGINEER R. DYER
CHECKED

SHEET TITLE
WATER DETAILS
SHEET NUMBER
C211

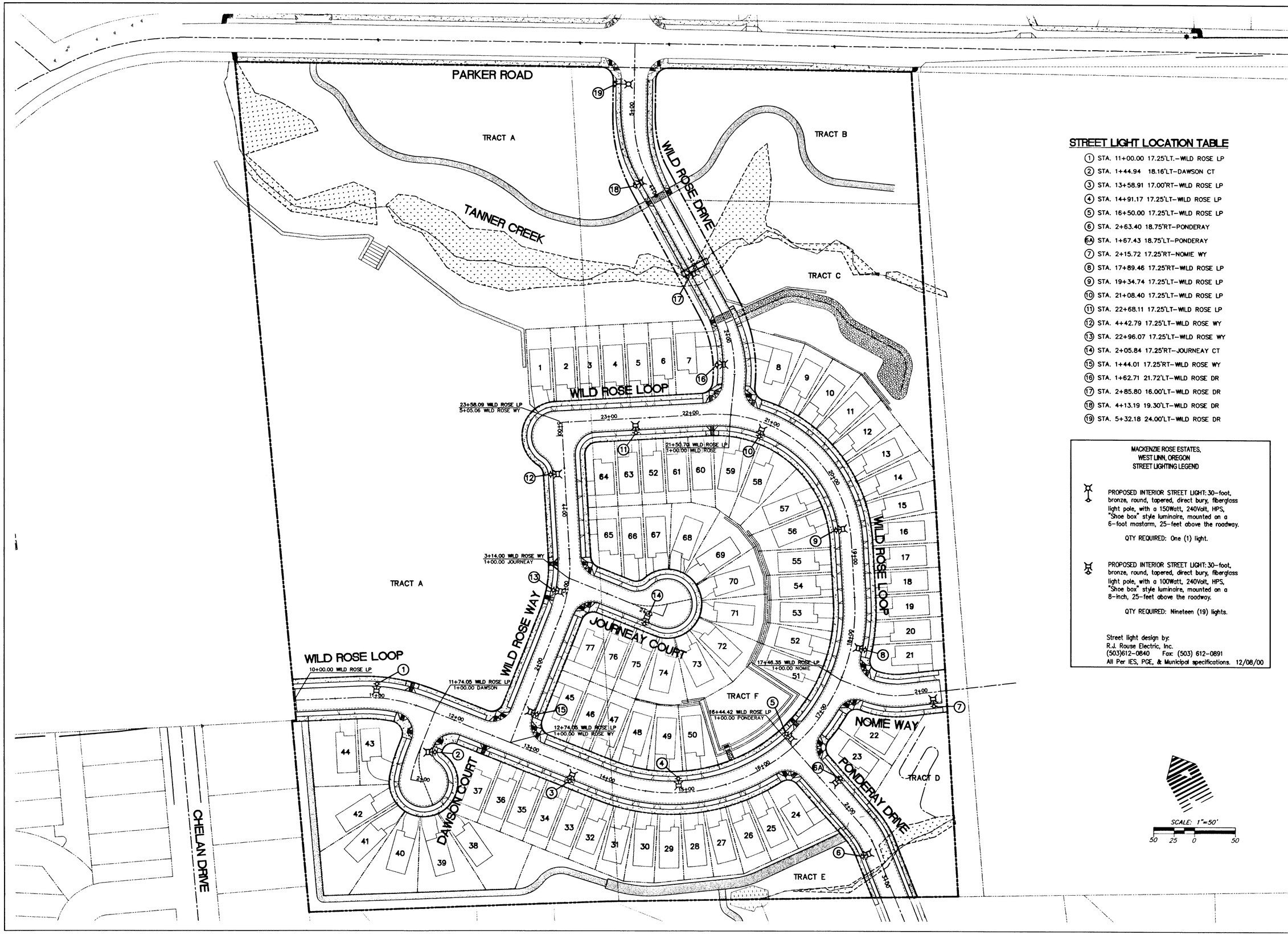

STREET LIGHT LOCATION TABLE

1. STA. 11+00.00 17.25'LT.–WILD ROSE LP
2. STA. 1+44.94 18.16'LT–DAWSON CT
3. STA. 13+58.91 17.00'RT–WILD ROSE LP
4. STA. 14+91.17 17.25'LT–WILD ROSE LP
5. STA. 16+50.00 17.25'LT–WILD ROSE LP
6. STA. 2+63.40 18.75'RT–PONDERAY
6A. STA. 1+67.43 18.75'LT–PONDERAY
7. STA. 2+15.72 17.25'RT–NOMIE WY
8. STA. 17+89.46 17.25'RT–WILD ROSE LP
9. STA. 19+34.74 17.25'LT–WILD ROSE LP
10. STA. 21+08.40 17.25'LT–WILD ROSE LP
11. STA. 22+68.11 17.25'LT–WILD ROSE LP
12. STA. 4+42.79 17.25'LT–WILD ROSE WY
13. STA. 22+96.07 17.25'LT–WILD ROSE WY
14. STA. 2+05.84 17.25'RT–JOURNEAY CT
15. STA. 1+44.01 17.25'RT–WILD ROSE WY
16. STA. 1+62.71 21.72'LT–WILD ROSE DR
17. STA. 2+85.80 16.00'LT–WILD ROSE DR
18. STA. 4+13.19 19.30'LT–WILD ROSE DR
19. STA. 5+32.18 24.00'LT–WILD ROSE DR

MACKENZIE ROSE ESTATES,
WEST LINN, OREGON
STREET LIGHTING LEGEND

PROPOSED INTERIOR STREET LIGHT: 30–foot, bronze, round, tapered, direct bury, fiberglass light pole, with a 150Watt, 240Volt, HPS, "Shoe box" style luminaire, mounted on a 6–foot mastarm, 25–feet above the roadway.

QTY REQUIRED: One (1) light.

PROPOSED INTERIOR STREET LIGHT: 30–foot, bronze, round, tapered, direct bury, fiberglass light pole, with a 100Watt, 240Volt, HPS, "Shoe box" style luminaire, mounted on a 8–inch, 25–feet above the roadway.

QTY REQUIRED: Nineteen (19) lights.

Street light design by:
R.J. Rouse Electric, Inc.
(503)612–0840 Fax: (503) 612–0891
All Per IES, PGE, & Municipal specifications. 12/08/00

SCALE: 1"=50'
50 25 0 50

WRG DESIGN INC.
5415 S.W. Westgate Dr., Suite 100
Portland, Oregon 97221
503 | 419–2500 FAX: 503 | 419–2600
PLANNERS • ENGINEERS • LANDSCAPE ARCHITECTS • SURVEYORS

REGISTERED PROFESSIONAL ENGINEER 19,172 OREGON JULY 15, 1997 RANDALL S. DYER
EXPIRES: 12/31/03

STREET LIGHTING
MACKENZIE ROSE ESTATES – P.U.D.
WEST LINN, OREGON

J.T. SMITH COMPANIES
NW ELECTRIC, LLC. ANDCO
22400 SALAMO ROAD, SUITE 204
WEST LINN, OREGON 97068

RECORD DRAWING
11/26/2001
THESE RECORD DRAWINGS HAVE BEEN PREPARED, IN PART, ON THE BASIS OF INFORMATION COMPILED AND FURNISHED BY THE CONTRACTOR, REVISED CONSTRUCTION PLANS, AND FIELD OBSERVATIONS DURING CONSTRUCTION.

PROJECT NO. JTS007

DATE	01/25/01
DRAFTED	D. LAVOIE
DESIGNED	M. LARSON
ENGINEER	R. DYER
CHECKED	

SHEET TITLE: STREET LIGHTS

SHEET NUMBER: C300

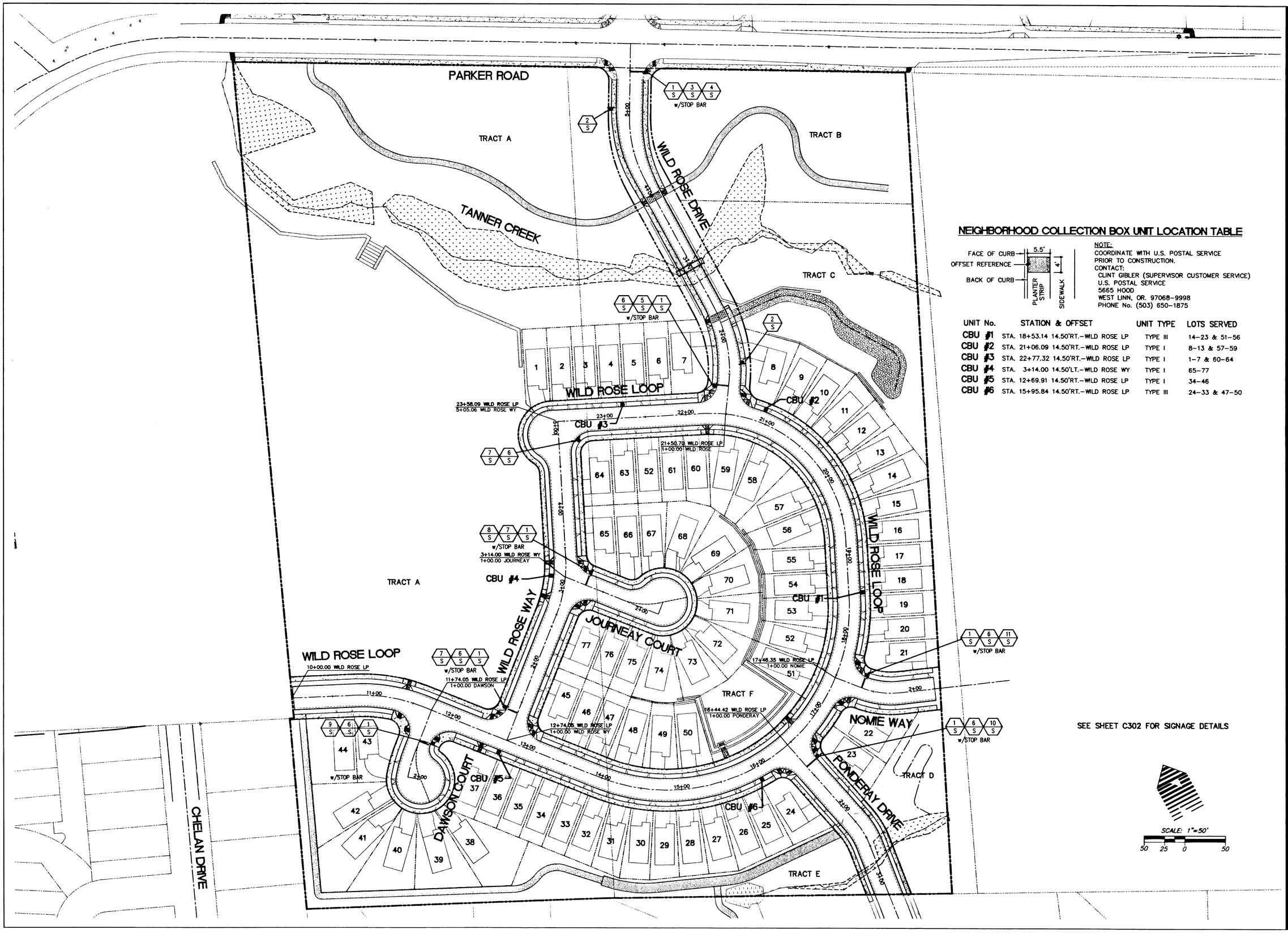

NEIGHBORHOOD COLLECTION BOX UNIT LOCATION TABLE

NOTE:
COORDINATE WITH U.S. POSTAL SERVICE PRIOR TO CONSTRUCTION.
CONTACT:
CLINT GIBLER (SUPERVISOR CUSTOMER SERVICE)
U.S. POSTAL SERVICE
5665 HOOD
WEST LINN, OR. 97068-9998
PHONE No. (503) 650-1875

UNIT No.	STATION & OFFSET	UNIT TYPE	LOTS SERVED
CBU #1	STA. 18+53.14 14.50'RT.-WILD ROSE LP	TYPE III	14-23 & 51-56
CBU #2	STA. 21+06.09 14.50'RT.-WILD ROSE LP	TYPE I	8-13 & 57-59
CBU #3	STA. 22+77.32 14.50'RT.-WILD ROSE LP	TYPE I	1-7 & 60-64
CBU #4	STA. 3+14.00 14.50'LT.-WILD ROSE WY	TYPE I	65-77
CBU #5	STA. 12+69.91 14.50'RT.-WILD ROSE LP	TYPE I	34-46
CBU #6	STA. 15+95.84 14.50'RT.-WILD ROSE LP	TYPE III	24-33 & 47-50

SEE SHEET C302 FOR SIGNAGE DETAILS

WRG DESIGN INC.
5415 S.W. Westgate Dr., Suite 100
Portland, Oregon 97221
503 | 419-2500 FAX: 503 | 419-2600
PLANNERS • ENGINEERS • LANDSCAPE ARCHITECTS • SURVEYORS

REGISTERED PROFESSIONAL ENGINEER 19,172 OREGON JULY 15, 1997 RANDALL S. DYER
EXPIRES: 12/31/03

SIGNAGE/MAILBOX PLAN
MACKENZIE ROSE ESTATES - P.U.D.
WEST LINN, OREGON

J.T. SMITH COMPANIES
REAL ESTATE DEVELOPMENT
22400 SALAMO ROAD, SUITE 204
WEST LINN, OREGON 97068

RECORD DRAWING
11/26/2001

THESE RECORD DRAWINGS HAVE BEEN PREPARED, IN PART, ON THE BASIS OF INFORMATION COMPILED AND FURNISHED BY THE CONTRACTOR, REVISED CONSTRUCTION PLANS, AND FIELD OBSERVATIONS DURING CONSTRUCTION.

PROJECT NO. JTS007

DATE	01/25/01
DRAFTED	D. LAVOIE
DESIGNED	D. LAVOIE
ENGINEER	R. DYER
CHECKED	

SHEET TITLE
SIGNAGE/MAILBOX

SHEET NUMBER
C301

J:\DATA\JTS007\Autocad\AS-BUILTS\AB-CD-BASE.dwg Wed Nov 21 11:55:54 2001 DGL

P E R M A N E N T S I G N I N G L E G E N D

GENERAL SIGNING NOTES:

1) CONTRACTOR SHALL SUPPLY ALL SIGNS, AND IS RESPONSIBLE FOR STAKING SIGN LOCATIONS AND OBTAINING UTILITY LOCATES FOR STAKED SIGN LOCATIONS. SIGNS SHALL BE LOCATED PER TYPICAL SIGN LOCATION OR AS SHOWN ON PLANS. IT IS THE CONTRACTORS RESPONSIBILITY TO VERIFY THE FINAL STREET NAMES WITH JOHN NOMIE, CITY OF WEST LINN BUILDING DEPT. AT (503) 722-5510 AND TO COORDINATE WITH SAN FOXWORTHY, CITY OF WEST LINN PUBLIC WORKS DEPT. AT (503) 656-6081 FOR SIGNAGE/STRIPPING INSTALLATION.

2) ALL SIGNING AND PAVEMENT MARKINGS SHALL CONFORM TO THE MANUAL ON UNIFORM TRAFFIC CONTROL DEVICES (MUTCD), LATEST EDITION OF THE OREGON SUPPLEMENT TO THE MUTCD, ODOT SPECIFICATIONS AND THE REQUIREMENTS OF THE CITY OF WEST LINN.

3) STREET NAME SIGNS SHALL BE: (VERIFY FINAL STREET NAMES BEFORE ORDERING AND INSTALLING)

A) **FOR LOCAL AND COLLECTOR STREET INTERSECTIONS:** SIX (6) INCH 0.080 INCH FLAT BLADE ALULMINUM BLANKS, MOUNTED ON TOP OF POST WITH SPECIAL BRACKETS.

LETTERING: FOUR (4) INCH UPPER CASE SERIES C
PRE-FIXES AND SUFFIXES: THREE (3) INCH UPPERCASE SERIES C
SUPERSCRIPT FOR NUMERICAL STREET NAMES: TWO (2) INCH UPPERCASE SERIES C
LAYOUT PER "TYPICAL STREET NAME SIGN LAYOUT" TWO (2) SIDED

B) **FOR ARTERIAL STREET INTERSECTIONS:** NINE (9) INCH 0.080 INCH FLAT BLADE ALUMINUM BLANKS, MOUNTED DIRECTLY TO POST WITH RIVETS

LETTERING: SIX (6) INCH UPPER CASE SERIES C
PRE-FIXES AND SUFFIXES: FOUR (4) INCH UPPERCASE SERIES C
SUPERSCRIPT FOR NUMERICAL STREET NAMES: THREE (3) INCH UPPERCASE SERIES C
LAYOUT PER "TYPICAL STREET NAME SIGN LAYOUT" ONE (1) SIDED, TWO (2) SIGNS PER STREET NAME.

C) **FOR SIGNALIZED INTERSECTIONS:** TWELVE (12) INCH 0.125 MM FLAT BLADE ALUMINUM BLANKS, MOUNTED TO MAST ARM OR STRAIN POLE FOR SPAN WIRE SIGNAL SYSTEMS.

LETTERING: EIGHT (8) INCH UPPER CASE SERIES C
PRE-FIXES AND SUFFIXES: FIVE (5) INCH UPPERCASE SERIES C
SUPERSCRIPT FOR NUMERICAL STREET NAMES: FOUR (4) INCH UPPERCASE SERIES C
LAYOUT PER "TYPICAL STREET NAME SIGN LAYOUT" ONE (1) SIDED WITH BORDER

MATERIAL FOR ALL STREET NAME SIGNS PER "SIGNING MATERIALS"

WIDTH OF SIGN PER BELOW TABLES FOR SIX (6) AND NINE (9) INCH BLANKS.

SUFFIXES ABBREVIATIONS PER: "COMMON ABBREVIATIONS"

6 INCH BLANKS (TWO SIDED)		*9 INCH BLANKS (ONE SIDED)*	
# OF CHARACTERS (NOT INCLUD. PREFIXES AND SUFFIXES)	BLANK WIDTH	# OF CHARACTERS (NOT INCLUD. PREFIXES AND SUFFIXES)	BLANK WIDTH
UP TO 6	24 INCH	UP TO 6	38 INCH
7 TO 9	30 INCH	7 TO 9	48 INCH
10 TO 11	36 INCH	10 TO 11	55 INCH
12 TO 13	42 INCH	12 TO 13	61 INCH
OVER 13	48 INCH	14 TO 15	68 INCH

FOR MAST ARM STREET NAME SIGN LETTER SPACING USE ODOT'S STANDARDS

COMMON ABBREVIATIONS

AVE = AVENUE	LN = LANE	RD = ROAD
BLVD= BOULEVARD	LP = LOOP	ST = STREET
CIR = CIRCLE	PKWY = PARKWAY	TER = TERRACE
CT = COURT	PL = PLACE	WAY = WAY
DR = DRIVE		

4) POSTS

A MINIMUM OF 2 X 2 INCH X 10 FOOT GALVANIZED "UNISTRUT TELESPAR" OR 12 GAUGE PERFORATED POSTS OR APPROVED EQUIVALENT SHALL BE USED.

A 2 X 2 INCH X 12 FOOT (MIN.) 12 GAUGE GALVANIZED "UNISTRUT TELESPAR" OR 12 GAUGE PERFORATED POSTS OR APPROVED EQUIVALENT SHALL BE USED WHEN A COMBINATION OF SIGNS IS MORE THAN 36 INCHES IN HEIGHT.

SIGN POSTS AND ANCHORS SHALL BE INSTALLED BY THE CITY OF WEST LINN.

NO OTHER TYPE OF POST SHALL BE USED UNLESS PRIOR APPROVAL OF THE CITY OF WEST LINN TRAFFIC ENGINEER IS OBTAINED.

PERMANENT SIGNING LEGEND

N — INSTALL NEW SIGN

N/M — INSTALL NEW SIGN (N) ON NEW (M) SUPPORT

N = SIGN NUMBER
M = MATERIALS, OPTIONS ARE:
S = STEEL "TELESPAR"

STOP — CODE: R1-1 TYPE: "R" SIZE: 30"x30" QUANTITY: 7 — SIGN 1	SLOW 20 — CODE: OR2-1 TYPE: SIZE: 24"x30" QUANTITY: 2 — SIGN 2
PARKER RD — CODE: D3 TYPE: SIZE: 9" BLANK QUANTITY: 2 — SIGN 3	WILD ROSE DR — CODE: D3 TYPE: SIZE: 9" BLANK QUANTITY: 2 — SIGN 4
WILD ROSE DR — CODE: D3 TYPE: SIZE: 6" BLANK QUANTITY: 1 — SIGN 5	WILD ROSE LP — CODE: D3 TYPE: SIZE: 6" BLANK QUANTITY: 6 — SIGN 6
WILD ROSE WAY — CODE: D3 TYPE: SIZE: 6" BLANK QUANTITY: 3 — SIGN 7	JOURNEAY CT — CODE: D3 TYPE: SIZE: 6" BLANK QUANTITY: 1 — SIGN 8
DAWSON CT — CODE: D3 TYPE: SIZE: 6" BLANK QUANTITY: 1 — SIGN 9	PONDERAY DR — CODE: D3 TYPE: SIZE: 6" BLANK QUANTITY: 1 — SIGN 10
NOMIE WAY — CODE: D3 TYPE: SIZE: 6" BLANK QUANTITY: 1 — SIGN 11	

NOTE:
SIGN #2 LOCATIONS
STA. 2+63.25, 16'RT. WILD ROSE DR.
STA. 5+02.61, 23'LT. WILD ROSE DR.

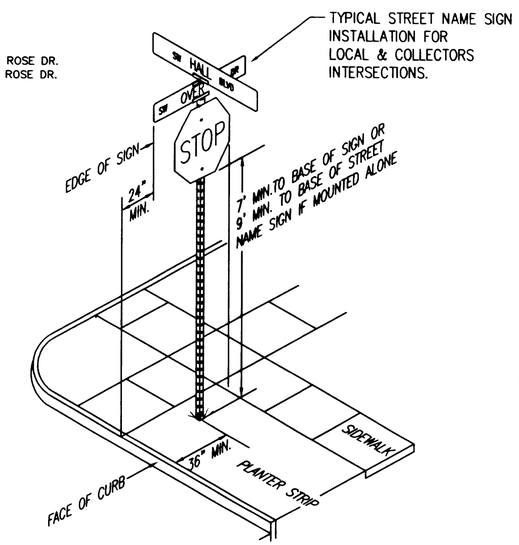

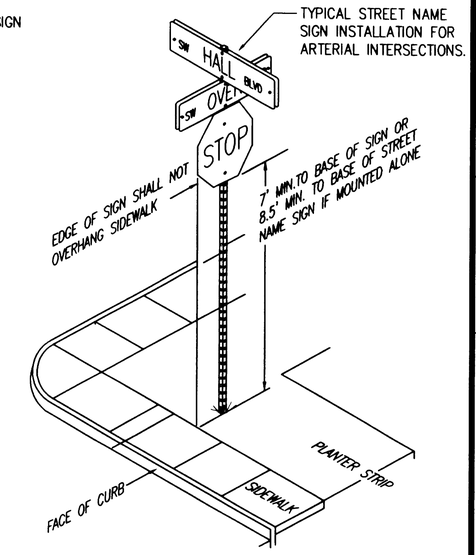

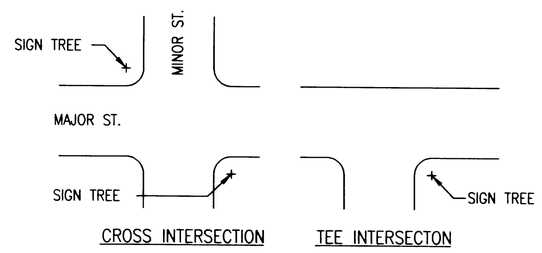

TYPICAL SIGN LOCATIONS
NTS

TYPICAL "STREET NAME" SIGN LAYOUT
NTS

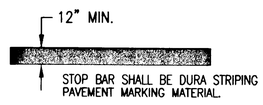

STOP BAR

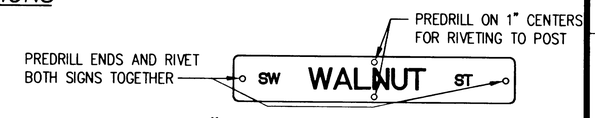

9" STREET NAME SIGN BLANKS
NTS

SIGNING MATERIALS	
STOP & YIELD SIGNS	ENCAPSULATED LENS REFLECTIVE SHEETING.
SCHOOL ADVANCE AND CROSSING SIGNS	PRISMATIC LENS YELLOW/GREEN REFLECTIVE SHEETING
STREET NAME SIGNS (POST & OVERHEAD MOUNTED)	LETTERS-ENCAPSULATED LENS SHEETING. BACKGROUND-ENGINEERING GRADE REFLECTIVE SHEETING.
ALL OTHER SIGNS (POST MOUNTED)	ENGINEERING GRADE REFLECTIVE SHEETING.
OVERHEAD SIGNING (EXCEPT STREET NAME SIGNS)	PRISMATIC LENS REFLECTIVE SHEETING.

TYPICAL SIGN SIZES
STOP SIGNS - 30"x30"
SPEED SIGNS - 24"x30" ON LOCAL STREETS (THE WORD LIMIT SHALL NOT BE USED ON SPEED SIGNS) 30"x36" ON COLLECTOR AND ARTERIAL ROADS.
NO PARKING SIGNS - R7-2A IS STANDARD, WITH A R7-201 12"x6" "TOW AWAY ZONE" 12"x18" ON LOCAL ROADS, 18"x24" ON COLLECTORS AND ABOVE, WHEN ARROWS ARE USED, SIGNS AT BOTH ENDS OF THE ZONE SHALL HAVE SINGLE ARROWS POINTING IN THE APPROPRIATE DIRECTION WITH DOUBLE ARROWS IN BETWEEN.

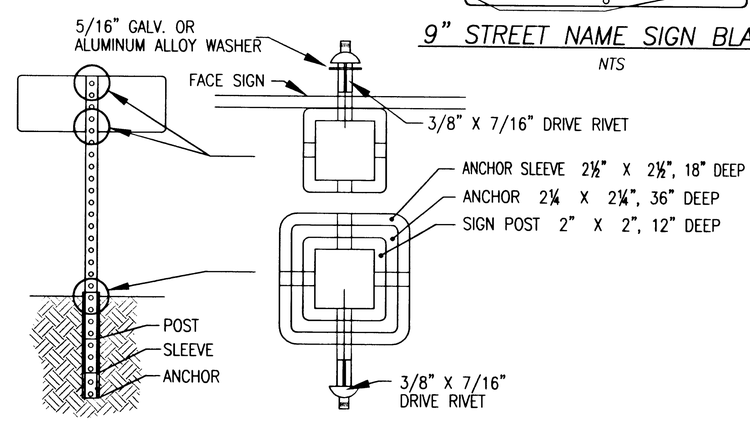

TYPICAL SIGN INSTALLATION
NTS

WRG DESIGN
5415 S.W. Westgate Dr., Suite 100
Portland, Oregon 97221
☎ 503 | 419-2500 FAX: 503 | 419-2600
PLANNERS • ENGINEERS • LANDSCAPE ARCHITECTS • SURVEYORS

REGISTERED PROFESSIONAL ENGINEER 19,172 OREGON JULY 15, 1997 RANDALL S. DYER
EXPIRES: 12/31/03

SIGNAGE DETAILS
MACKENZIE ROSE ESTATES - P.U.D.
WEST LINN, OREGON

J.T. SMITH COMPANIES

RECORD DRAWING
11/26/2001
THESE RECORD DRAWINGS HAVE BEEN PREPARED, IN PART, ON THE BASIS OF INFORMATION COMPILED AND FURNISHED BY THE CONTRACTOR, REVISED CONSTRUCTION PLANS, AND FIELD OBSERVATIONS DURING CONSTRUCTION.

PROJECT NO. JTS007

DATE	01/25/01
DRAFTED	D. LAVOIE
DESIGNED	D. LAVOIE
ENGINEER	R. DYER
CHECKED	

SHEET TITLE: SIGNAGE DETAILS
SHEET NUMBER: C302