NOTE: ALL DIMENSIONS ON THE HAMMERHEAD TURNAROUND ARE TO THE FACE OF EXTRUDED CURB, IT IS 16" FROM FACE OF CURB TO EDGE OF A.C.

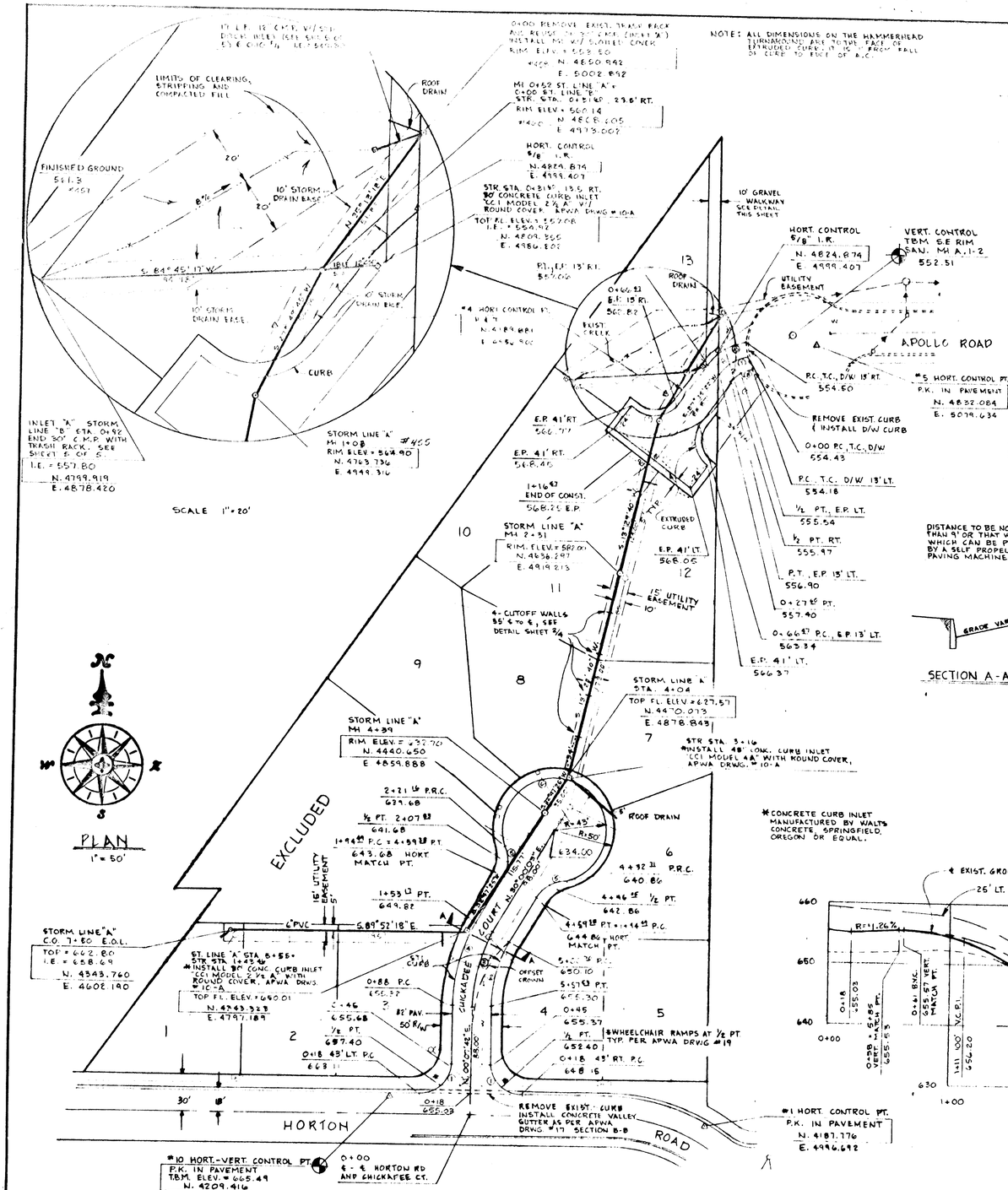

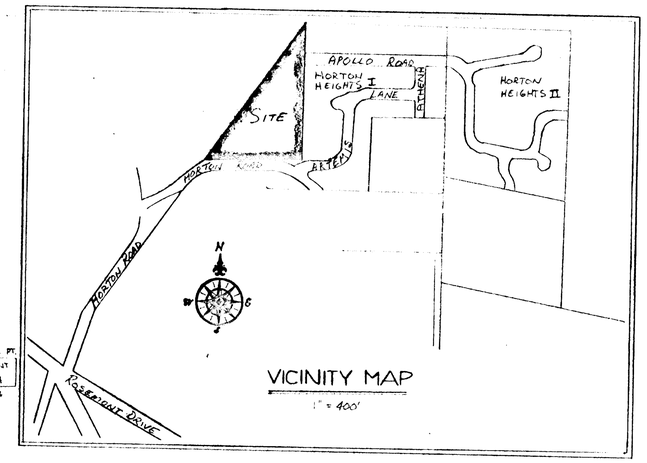

CURVE DATA

NO.	DELTA	LENGTH	RAD.	CHORD	TANGENT
1	90° 00' 00"	42.41	27	38.18	27.00
2	29° 52' 21"	56.83	109	56.19	29.08
3	29° 52' 21"	65.17	125	64.44	33.36
4	29° 52' 21"	73.51	141	72.68	37.61
5	50° 56' 28"	26.67	30	25.80	14.29
6	281° 52' 44"	211.55	43	54.19	----
7	90° 00' 00"	39.27	25	35.36	25.00
8	49° 40' 09"	21.67	25	21.00	11.57
9	41° 37' 09"	27.60	38	27.00	14.44
10	43° 25' 52"	37.90	50	37.00	19.91

CUL-DE-SAC CURB ELEVATIONS

ANGLE	STATION	ELEVATION
0°	2+21.14	639.68
30°	2+43.42	636.30
60°	2+66.18	632.92
90°	2+88.83	629.92
120°	3+11.20	628.36
150°	3+33.21	628.32
180°	3+56.33	629.81
210°	3+78.33	632.76
240°	4+01.34	636.14
270°	4+23.35	639.51

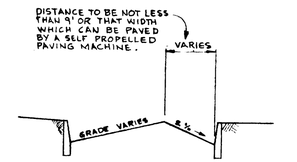

SECTION A-A OF OFFSET CROWN

N.T.S.

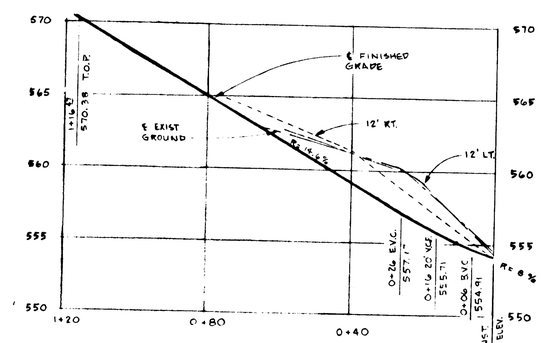

APOLLO RD. PROFILE

SCALE: HORT. 1" = 20'
VERT. 1" = 5'

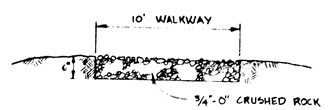

WALKWAY SECTION

N.T.S.

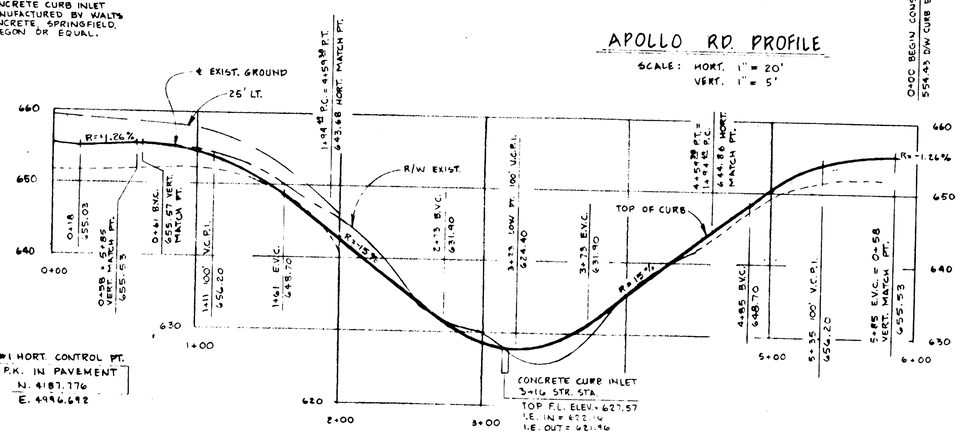

CHICKADEE COURT PROFILE

SCALE: HORT. 1" = 50'
VERT. 1" = 10'

"AS-BUILT"
LA GOLONDRINA

REGISTERED PROFESSIONAL ENGINEER 12,146 OREGON JULY 15 LEE A. BRIGGS

DATE	NO	REVISION
5-28-85	4	AS BUILTS
1-10-85	3	REV. AS PER CITY REQUEST
10-17-84	2	REV. STA. CORRECT & ADDED CROWN
9-12-84	1	ADDED WATER AND SANITARY

DRAWN B. J.W. | DESIGNED L. A. B. | CHECKED
SCALE AS SHOWN | DATE JULY, 1984
FILE 83-1994-1284

COMPASS CORPORATION
ENGINEERING - SURVEYING - PLANNING
8564 S.E. LAKE ROAD
MILWAUKIE, OREGON 97222
(503) 222-4652
(503) 653-9093

DONALD & MARY JOLLY
21151 S. HORTON RD.
WEST LINN, OREGON 97068 656-5372

ROAD & STORM SEWER IMPROVEMENTS
PLAN & PROFILES

1 / 5

LA GOLONDRINA

Willamette Print & Blueprint Company N30452

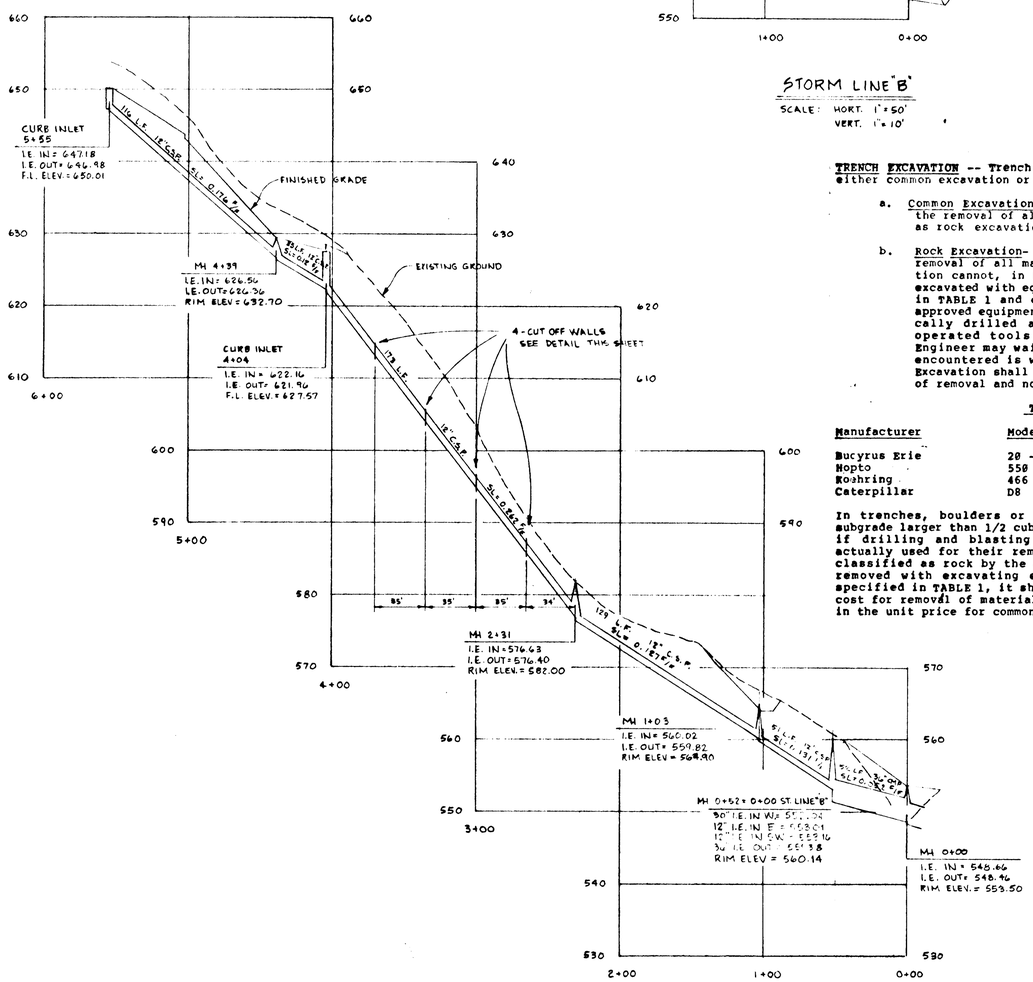

STORM LINE "A"

SCALE: HORT. 1" = 50'
VERT. 1" = 10'

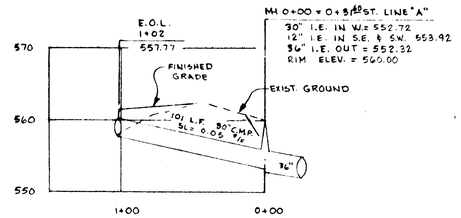

STORM LINE "B"

SCALE: HORT. 1" = 50'
VERT. 1" = 10'

TRENCH EXCAVATION -- Trench excavation shall be classified as either common excavation or rock excavation as defined below:

a. Common Excavation- Common excavation is defined as the removal of all material which is not classified as rock excavation.

b. Rock Excavation- Rock excavation is defined as the removal of all material which by actual demonstration cannot, in Engineer's judgment, be reasonably excavated with equipment comparable to types listed in TABLE 1 and equipped with rippers or similar approved equipment and which is, in fact, systematically drilled and blasted or broken by power-operated tools designed for rock excavation. Engineer may waive the demonstration if material encountered is well-defined rock. The term Rock Excavation shall be understood to indicate a method of removal and not a geological formation.

TABLE 1

Manufacturer	Model	Type of Excavation
Bucyrus Erie	20 - 11	Trench
Hopto	550	Trench
Koshring	466	Trench
Caterpillar	D8	Grading & Structural

In trenches, boulders or pieces of concrete below street subgrade larger than 1/2 cubic yard will be classified as rock if drilling and blasting or other approved methods are actually used for their removal. If material which would be classified as rock by the above definition is mechanically removed with excavating equipment of a larger size than specified in TABLE 1, it shall be understood that any added cost for removal of material by this method shall be included in the unit price for common excavation.

GENERAL NOTES:

- ALL WORK AND MATERIALS TO BE IN ACCORDANCE WITH THE CITY OF WEST LINN PUBLIC WORKS DEPARTMENT, O.S.H.D. AND A.P.W.A. OREGON CHAPTER SPECIFICATIONS.
- CONTRACTOR TO VERIFY ALL UTILITY LOCATIONS PRIOR TO CONSTRUCTION AND SHALL ARRANGE FOR THE RELOCATION OF ANY IN CONFLICT WITH THE PROPOSED CONSTRUCTION.
- CONTRACTOR TO OBTAIN ALL REQUIRED PERMITS AND LICENSES BEFORE STARTING CONSTRUCTION.
- EXISTING UTILITY LOCATIONS SHOWN ARE APPROXIMATE ONLY AND MUST BE VERIFIED BY THE CONTRACTOR. ADDITIONAL UNDERGROUND UTILITIES MAY EXIST.
- THE ENGINEER HAS NOT BEEN RETAINED OR COMPENSATED TO PROVIDE DESIGN AND CONSTRUCTION REVIEW SERVICES RELATING TO THE CONTRACTOR'S SAFETY PRECAUTIONS OR TO MEANS, METHODS, TECHNIQUES, SEQUENCES OR PROCEDURES REQUIRED FOR THE CONTRACTOR TO PERFORM HIS WORK.
- CONTRACTOR SHALL REMOVE AND DISPOSE OF TREES, STUMPS, BRUSH, ROOTS, AND OTHER MATERIAL IN THE ROADWAY AND WHERE INDICATED ON THE PLANS. MATERIAL SHALL BE DISPOSED OF IN SUCH A MANNER AS TO MEET LOCAL REGULATIONS.

WATER SYSTEM NOTES:

- ALL WORK AND MATERIALS SHALL COMPLY WITH THE CITY OF WEST LINN STANDARDS, THE OREGON STATE HEALTH DIVISION ADMINISTRATIVE RULES CHAPTER 333, THE A.W.W.A. AND THE A.P.W.A. STANDARDS.
- CONTRACTOR SHALL NOTIFY UTILITIES BEFORE STARTING CONSTRUCTION AND SHALL COORDINATE WATER LINE CONSTRUCTION WITH OTHER FACILITIES AND UTILITIES.
- CONTRACTOR SHALL VERIFY ALL UTILITY LOCATIONS PRIOR TO CONSTRUCTION AND SHALL CONSTRUCT THE WATER LINE TO AVOID CONFLICT WITH THE EXISTING UTILITIES.
- ALL PIPE TO BE MINIMUM COVER OF 30 INCHES BELOW FUTURE STREET GRADES.
- CONTRACTOR SHALL TAKE PRECAUTIONS TO PROTECT PIPE INTERIORS, FITTINGS, AND VALVES AGAINST CONTAMINATION.
- FIRE HYDRANTS TO BE DRY-BARREL WATEROUS TYPE AND COMPLY WITH A.W.W.A. C502.
- HOUSE SERVICES TO BE COPPER TYPE "K" SEAMLESS SOFT ANNEALED. SERVICES TO HAVE FORD COMPRESSION FITTINGS.
  SINGLE SERVICES TO BE 3/4-INCH.
  DOUBLE SERVICES TO BE 1-INCH.
  COPPER TUBE BENDS TO BE SMOOTH RADIUS.
- METER BOXES TO BE NO. 1 METER BOX AS MANUFACTURED BY METER BOX EQUIPMENT COMPANY, TIGARD, OREGON.
- METER LOCATIONS TO BE 18-INCHES BELOW TOP OF CURB AND 9-INCHES BEHIND CURB. SERVICE TAPS TO BE AT LEAST 18-INCHES APART.
- GATE VALVES TO BE A.W.W.A. C500. BUTTERFLY VALVES TO MEET A.W.W.A. C504. VALVES TO HAVE 2-INCH OPERATING NUT WITH COUNTER CLOCKWISE OPENING AND NON-RISING STEM.
- DUCTILE IRON PIPE TO BE TYTON JOINT CEMENT MORTAR LINED CLASS 52 AND SHALL CONFORM TO ASTM C110, C150, AND C151.
- FITTINGS AND PIPE SECTIONS THAT WILL NOT BE DISINFECTED BY CHLORINE IN LINE FOR 24 HOURS SHALL HAVE THE INTERIORS SWABBED WITH A 5 PERCENT HYPOCHLORITE SOLUTION BEFORE THEY ARE INSTALLED.
- CONCRETE THRUST BLOCKS TO BE CONSTRUCTED AT TEES, BENDS, FIRE HYDRANTS, BLOWOFFS AND WHERE INDICATED ON PLANS. THE MINIMUM BEARING SURFACE AGAINST UNDISTURBED SOIL TO BE AS SHOWN ON THE DETAIL SHEET. CONCRETE SHALL BE ALLOWED TO CURE BEFORE PIPELINE PRESSURE TESTING.
- PIPELINE TO BE TESTED AT 150 P.S.I. AND HELD AT THE PRESSURE FOR 2 HOURS. TEST TO BE WITNESSED BY CITY WATER DEPARTMENT PERSONNEL.
- PIPELINE TO BE THOROUGHLY DISINFECTED AND FLUSHED IN ACCORDANCE WITH A.W.W.A. STANDARD C 601.

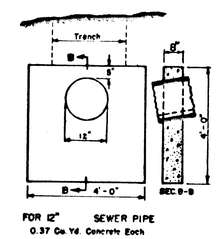

NOTES:

All concrete to be 3,000 lbs., 2" to 4" slump.

Anchor walls to be equally spaced with maximum distance between walls to be 36.2 ft on slope measure.

Place wall immediately below bell of pipe where possible.

CUTOFF WALL DETAIL

N.T.S.

ROAD AND STORM SEWER NOTES:

- CONCRETE CULVERT PIPE SHALL BE ASTM C 14 CLASS 3 NONREINFORCED CONCRETE PIPE UNLESS SHOWN OTHERWISE ON PROFILE.
- PIPE BEDDING SHALL CONFORM WITH GRANULAR BEDDING AND BACKFILL REQUIREMENTS OF A.P.W.A. DIV. III SECTION 301.2.02 AND SHALL BE 3/4"-0 CRUSHED ROCK.
- CORRUGATED METAL PIPE SHALL BE ASPHALT-COATED GALVANIZED STEEL PIPE AND COUPLING BANDS CONFORMING TO O.S.H.D. SECTION 605.
- TRENCHES WITHIN THE RIGHTS-OF-WAY SHALL BE "CLASS B" BACKFILL WITH SELECT GRANULAR MATERIAL CONFORMING TO APWA DIVISION THREE SECTION 301.2.04 B.
- COMPACTION SHALL BE PER APWA DIVISION THREE SECTION 301.3.07.
- CONTRACTOR TO DETERMINE TYPE OF EQUIPMENT AND METHOD TO USE TO ACHIEVE REQUIRED COMPACTION.
- TRENCH BACKFILL OUTSIDE OF PAVED AREAS MAY BE EXCAVATED TRENCH MATERIAL CONFORMING TO CLASS "A" PER AFWA DIVISION THREE SECTION 301.2.04.
- MATERIAL IN SOFT SPOTS WITHIN THE ROADWAY SHALL BE REMOVED TO THE DEPTH REQUIRED TO PROVIDE A FIRM FOUNDATION AND SHALL BE REPLACED WITH PIT RUN CRUSHED ROCK. THE ENTIRE SUBGRADE SHALL BE THOROUGHLY COMPACTED AT THE LOWEST MOISTURE CONTENT AT WHICH A HANDFUL OF THE SOIL CAN BE MOLDED BY A FIRM CLOSING OF THE HAND. (95% COMPACTION AASHTO T180).
- CONTRACTOR SHALL NOTIFY THE ENGINEER WHEN SUBGRADE IS COMPLETE AND 24 HOURS PRIOR TO PLACEMENT OF ROCK BASE MATERIAL AND 24 HOURS PRIOR TO FINAL PAVING FOR AN INSPECTION OF THE WORK. FAILURE TO DO SO WILL MAKE ANY SUBGRADE FAILURE OR DRAINAGE PROBLEMS THE RESPONSIBILITY OF THE CONTRACTOR.
- ASPHALT CONCRETE PAVEMENT MIX TO BE DESIGNED FROM A MIX FORMULA APPROVED BY O.S.H.D. FOR MATERIAL USED. CONTRACTOR TO PROVIDE ENGINEER WITH CERTIFICATE OF COMPLIANCE FROM ASPHALT PAVEMENT PLANT UNLESS OTHERWISE INDICATED.
- EXCESS EXCAVATION TO BE SPREAD AND COMPACTED EVENLY ON LOTS AS DIRECTED BY OWNER. VEGETATION AND TOPSOIL TO BE STRIPPED OFF FILL AREAS PRIOR TO FILLING.
- SIDEWALKS SHOWN ON STREET SECTION ARE NOT PART OF THIS CONTRACT. THEY WILL BE CONSTRUCTED AS PART OF THE LOT IMPROVEMENTS.
- ALL EXIST. A.C. TO BE SAW CUT PRIOR PAVING.

REGISTERED PROFESSIONAL ENGINEER 12,146 OREGON JULY 16, 1985 LEE A. BRIGGS

"AS-BUILT"

LA GOLONDRINA

DATE	NO.	REVISION
5-28-85	2	"AS-BUILTS"
1-10-85	1	REV. AS PER CITY REQUEST

DRAWN B.J.W. | DESIGNED L.A.B. | CHECKED
SCALE AS SHOWN | DATE JULY, 1984
FILE 83-1994-1284

COMPASS CORPORATION
ENGINEERING - SURVEYING - PLANNING
8564 S.E. LAKE ROAD
MILWAUKIE, OREGON 97222
(503) 222-4652
(503) 653-9093

DONALD & MARY JOLLY
21151 S. HORTON RD.
WEST LINN, OREGON 97068 656-5372

STORM SEWER
IMPROVEMENTS - PROFILES

2/5

Willamette Print & Blueprint Company N3540

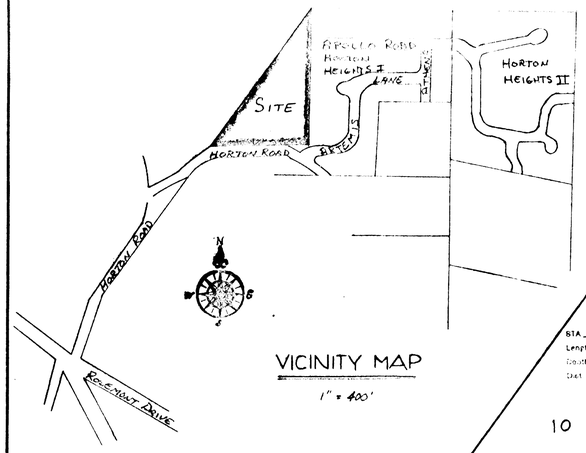

VICINITY MAP

1" = 400'

NOTE: SEWER AND WATER CONNECTIONS TO BE MADE TO EXISTING HOUSE ON EXCLUDED PARCEL

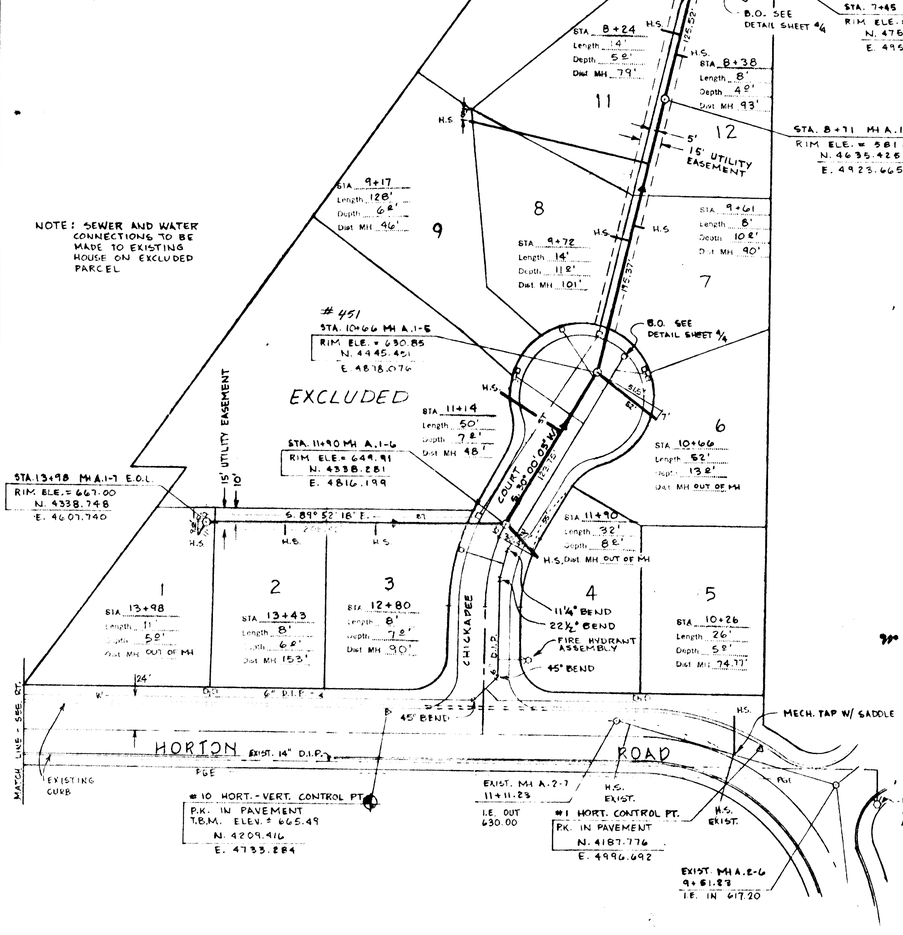

PLAN

1" = 50'

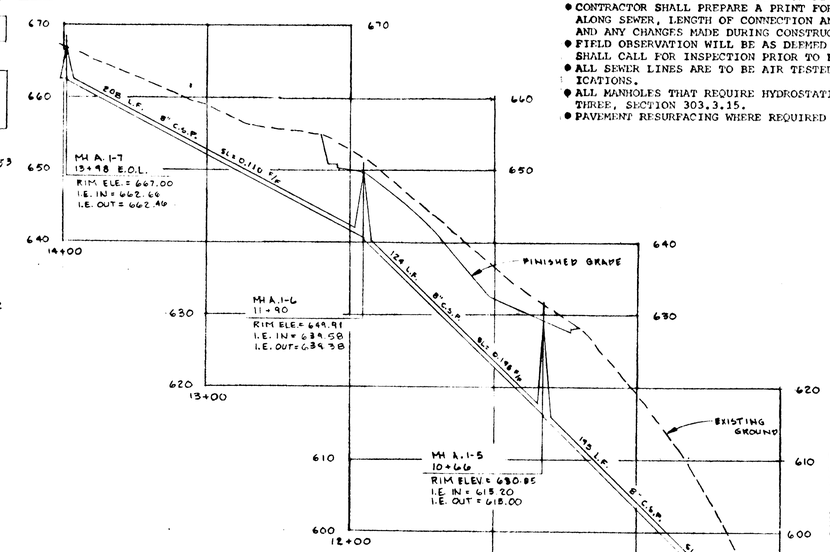

PROFILE A.1

SCALE: HORT. 1" = 50'
VERT. 1" = 10'

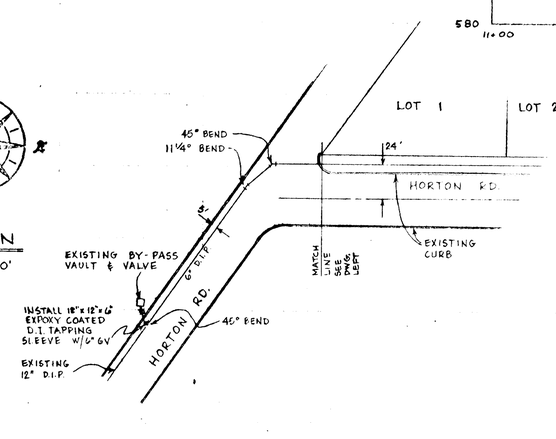

SANITARY SYSTEM NOTES:

- CONCRETE SANITARY SEWER PIPE SHALL BE ASTM C14, CLASS 3 REINFORCED CONCRETE PIPE WITH RUBBER GASKETS UNLESS SHOWN OTHERWISE ON PROFILE.
- ENGINEER RESERVES THE RIGHT TO ADJUST GRADES OR ALIGNMENT TO ACCOMMODATE UTILITIES OR EXISTING SEWER LINES AS REQUIRED.
- ALL TRENCH EXCAVATION SHALL CONFORM TO APWA DIVISION THREE, SECTION 301.1.01
- ALL EXCESS MATERIAL FROM THE TRENCH EXCAVATION SHALL BE DISPOSED OF ON SITE.
- PIPE BEDDING SHALL BE AS PER APWA DIVISION THREE, SECTION 301.2.02 AND SHALL BE 3/4"-0 CRUSHED ROCK.
- TRENCH BACKFILL SHALL BE CLASS "A" PER APWA DIVISION THREE SECTION 301.2.04 ON ALL SEWER LINES OUTSIDE PUBLIC RIGHTS-OF-WAY OR OUTSIDE OF PAVED AREAS. TRENCH BACKFILL SHALL BE CLASS "B" PER APWA DIVISION THREE, SECTION 301.2.04B IN ALL PUBLIC RIGHTS-OF-WAY OR PAVED AREAS IN THE PROJECT.
- TRENCH BACKFILL COMPACTION SHALL BE AS PER APWA DIVISION THREE, SECTION 301.3.07. CONTRACTOR TO DETERMINE TYPE OF EQUIPMENT AND METHOD TO USE TO ACHIEVE THE REQUIRED COMPACTION. SUBSEQUENT SETTLEMENT OF THE FINISHED SURFACE WITHIN THE WARRANTY PERIOD SHALL BE CONSIDERED TO BE A RESULT OF IMPROPER COMPACTION AND SHALL BE PROMPTLY REPAIRED BY THE CONTRACTOR AT NO EXPENSE TO THE OWNER.
- ALL CONCRETE MANHOLES SHOWN ON THE PLANS AR' 48" MINIMUM DIAMETER AND CONFORM TO CITY STANDARD.
- BUILDING SERVICE CONNECTIONS TO SLOPE 2% MINIMUM UP TO FUTURE HOUSE LOCATION FROM SEWER LATERAL OR MAIN. SERVICE SHALL BE 6-INCH SEWER PIPE AND SHALL EXTEND TO MINIMUM OF 1 PIPE LENGTH BEYOND THE R/W OR BASEMENT LINE.
- WYES AND 1/8TH BENDS REQUIRED FOR HOUSE SERVICE CONNECTION AT MAIN LINE.
- STATIONING AND DISTANCE SHOWN ON PLAN AND PROFILE ARE HORIZONTAL AND NOT SLOPE DISTANCE.
- CONTRACTOR SHALL PREPARE A PRINT FOR THE ENGINEER SHOWING AS-CONSTRUCTION DATA: STATION OF WYE ALONG SEWER, LENGTH OF CONNECTION AND DEPTH OF SERVICE CONNECTION AT PROPERTY LINE OF END OF SERVICE AND ANY CHANGES MADE DURING CONSTRUCTION.
- FIELD OBSERVATION WILL BE AS DEEMED NECESSARY BY ENGINEER. IF INSPECTOR IS NOT PRESENT, CONTRACTOR SHALL CALL FOR INSPECTION PRIOR TO BACKFILLING TRENCH AND TO WITNESS PIPELINE TESTING.
- ALL SEWER LINES ARE TO BE AIR TESTED PER DIVISION THREE, SECTION 303.3.16 OF THE STANDARD SPECIFICATIONS.
- ALL MANHOLES THAT REQUIRE HYDROSTATIC TESTING SHALL BE TESTED IN ACCORDANCE WITH APWA DIVISION THREE, SECTION 303.3.15.
- PAVEMENT RESURFACING WHERE REQUIRED SHALL CONFORM TO APWA DIVISION THREE, SECTION 309.

TRENCH EXCAVATION -- Trench excavation shall be classified as either common excavation or rock excavation as defined below:

a. Common Excavation- Common excavation is defined as the removal of all material which is not classified as rock excavation.

b. Rock Excavation- Rock excavation is defined as the removal of all material which by actual demonstration cannot, in Engineer's judgment, be reasonably excavated with equipment comparable to types listed in TABLE 1 and equipped with rippers or similar approved equipment and which is, in fact, systematically drilled and blasted or broken by power-operated tools designed for rock excavation. Engineer may waive the demonstration if material encountered is well-defined rock. The term Rock Excavation shall be understood to indicate a method of removal and not a geological formation.

TABLE 1

Manufacturer	Model	Type of Excavation
Bucyrus Erie	20 - 11	Trench
Hopto	550	Trench
Koehring	466	Trench
Caterpillar	D8	Grading & Structural

In trenches, boulders or pieces of concrete below street subgrade larger than 1/2 cubic yard will be classified as rock if drilling and blasting or other approved methods are actually used for their removal. If material which would be classified as rock by the above definition is mechanically removed with excavating equipment of a larger size than specified in TABLE 1, it shall be understood that any added cost for removal of material by this method shall be included in the unit price for common excavation.

"AS-BUILT"
LA GOLONDRINA

REGISTERED PROFESSIONAL ENGINEER 12,148 OREGON JULY 25, 1984 LEE A. BRIGGS

DATE	NO.	REVISION
4-22-85	2	AS-BUILTS
1-10-85	1	REV. AS PER CITY REQUEST

DRAWN B.J.W. | DESIGNED L.A.B. | CHECKED
SCALE AS SHOWN | DATE JULY, 1984
FILE 83 - 1994 - 1284

COMPASS CORPORATION
ENGINEERING - SURVEYING - PLANNING
6564 S.E. LAKE ROAD
MILWAUKIE, OREGON 97222
(503) 222-4652
(503) 653-9093

DONALD & MARY JOLLY
21151 S. HORTON RD.
WEST LINN, OREGON 97068 656-5372

SANITARY SEWER & WATER IMPROVEMENTS
PLAN & PROFILES

3/5

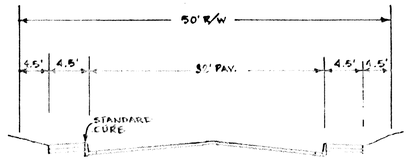

CHICKADEE COURT

N.T.S.

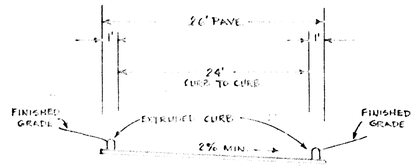

APOLLO ROAD DRIVE

N.T.S.

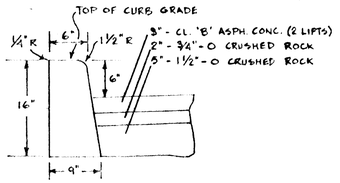

STANDARD CURB SECTION

N.T.S.

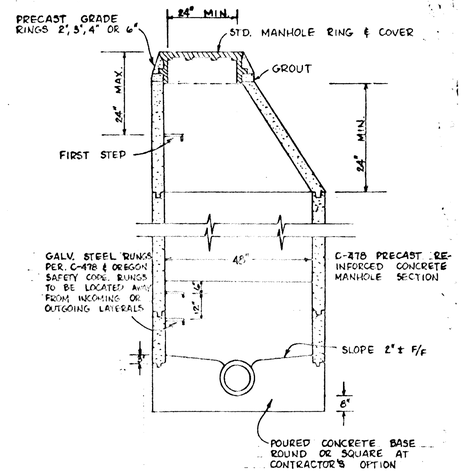

STANDARD MANHOLE

N.T.S.

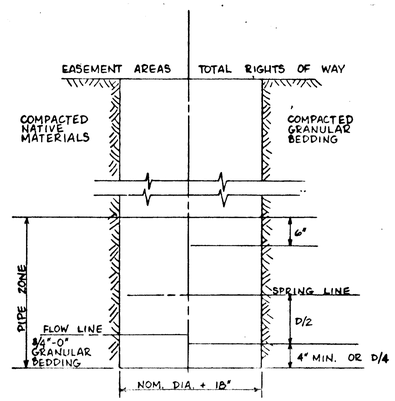

TRENCH SECTION

N.T.S.

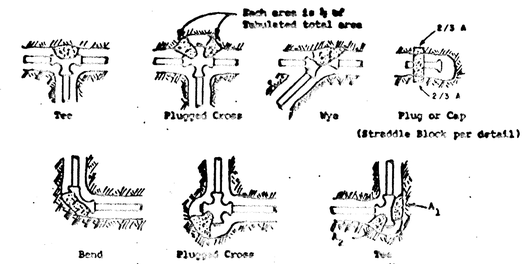

NOTES:

1. Concrete thrust blocking to be poured against undisturbed earth.
2. Keep concrete clear of joint and accessories.
3. If not shown on plans required bearing areas at fitting shall be as indicated below, adjusted if necessary, to conform to the test pressure(s) and allowable soil bearing stress(es) stated in the special specifications.
4. Bearing areas and special blocking details shown on plans take precedence over bearing areas and blocking details shown on this standard detail.

Fitting Size	Tee, Wye, Plug or Cap	90° Bend Plugged Cross	Tee Plugged On Run A_1	Tee Plugged On Run A_2	45° Bend	22½° Bend	11¼° Bend
4	1.0	1.4	1.9	1.4	1.0	-	-
6	2.1	3.0	4.8	3.0	1.6	1.0	-
8	3.8	5.3	7.6	5.4	2.9	1.5	1.0
10	5.9	8.4	11.8	8.4	4.6	2.4	1.2
12	8.5	12.0	17.0	12.0	6.6	3.4	1.7
14	11.5	16.3	23.0	16.3	8.9	4.6	2.3
16	15.0	21.3	30.0	21.3	11.6	6.0	3.0
18	19.0	27.0	38.0	27.0	14.6	7.6	3.8
20	23.5	33.3	47.0	33.3	18.1	9.4	4.7
24	34.0	48.0	68.0	48.0	26.2	13.6	6.8

NOTE:
Above bearing areas based on test pressure of 150 p.s.i. and an allowable soil bearing stress of 2,000 pounds per square foot. To compute bearing areas for different test pressures and soil bearing stresses, use the following equation: Bearing Area = (test pressure/150)x(2000/soil bearing stress)x(table value).

THRUST BLOCKING DETAILS

N.T.S.

NOTE:
EPOXY ADHESIVE - The epoxy adhesive shall be the equivalent of CONCRESIVE 1011 as manufactured by the Adhesive Engineering Company of San Carlos, California.

CURING COMPOUND- The curing compound shall be the Acrylic type meeting the requirements of ASTM specifications C309 at an application rate of 300 square feet per gallon.

NOTE
DIMENSIONS NOMINAL
VARY TO CONFORM WITH CURB MACHINE APPROVED BY THE ENGINEER

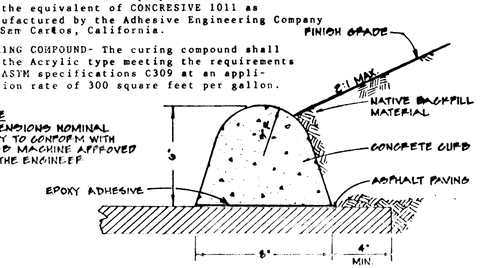

EXTRUDED CONCRETE CURB

NOT TO SCALE

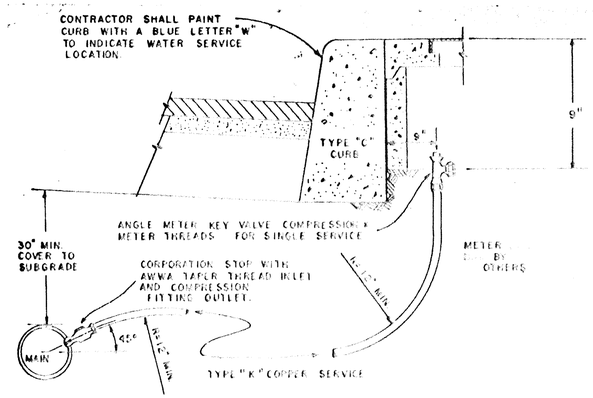

TYPICAL WATER SERVICE INSTALLATION

N.T.S.

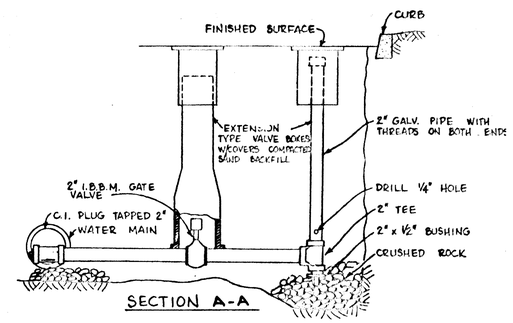

SECTION A-A

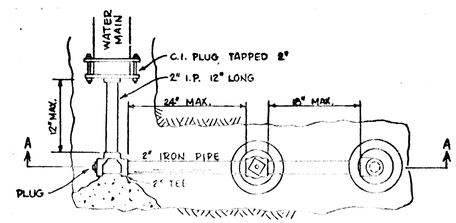

PLAN

STANDARD BLOWOFF ASSEMBLY

N.T.S.

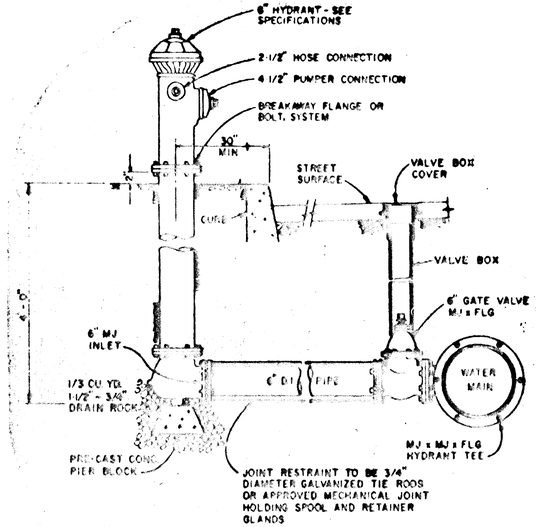

Fire Hydrant Assembly Details

N.T.S.

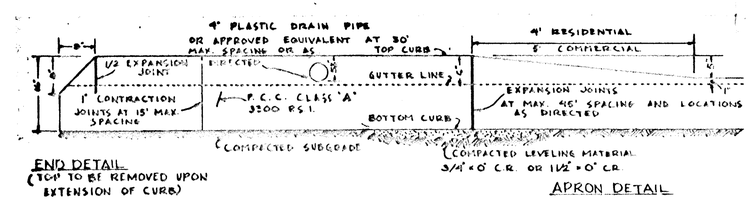

END DETAIL
(TOP TO BE REMOVED UPON EXTENSION OF CURB)

APRON DETAIL

GENERAL PURPOSE CURB - O.S.H.D. TYPE "C"

1/16" = 1"

LA GOLONDRINA

DATE	NO.	REVISION
1-10-85	2	REV'D. AS PER CITY REQUEST
8-10-84	1	REV'D. APOLLO RD. CROSS SLOPE

DRAWN M.J. | DESIGNED L.A.B. | CHECKED
SCALE AS SHOWN | DATE JULY, 1984
FILE 83-1994-1284

COMPASS CORPORATION
ENGINEERING - SURVEYING - PLANNING
8564 S.E. LAKE ROAD, MILWAUKIE, OREGON 97222
(503) 222-4652
(503) 653-9093

DONALD & MARY JOLLY
21151 S. HORTON RD.
WEST LINN, OREGON 97068

CITY OF WEST LINN
STANDARD DETAILS

4/5

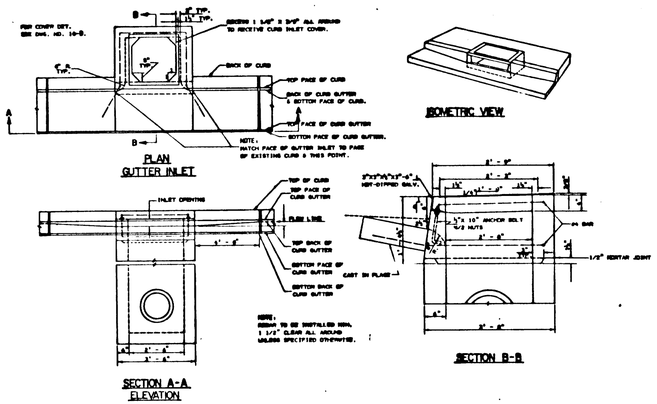

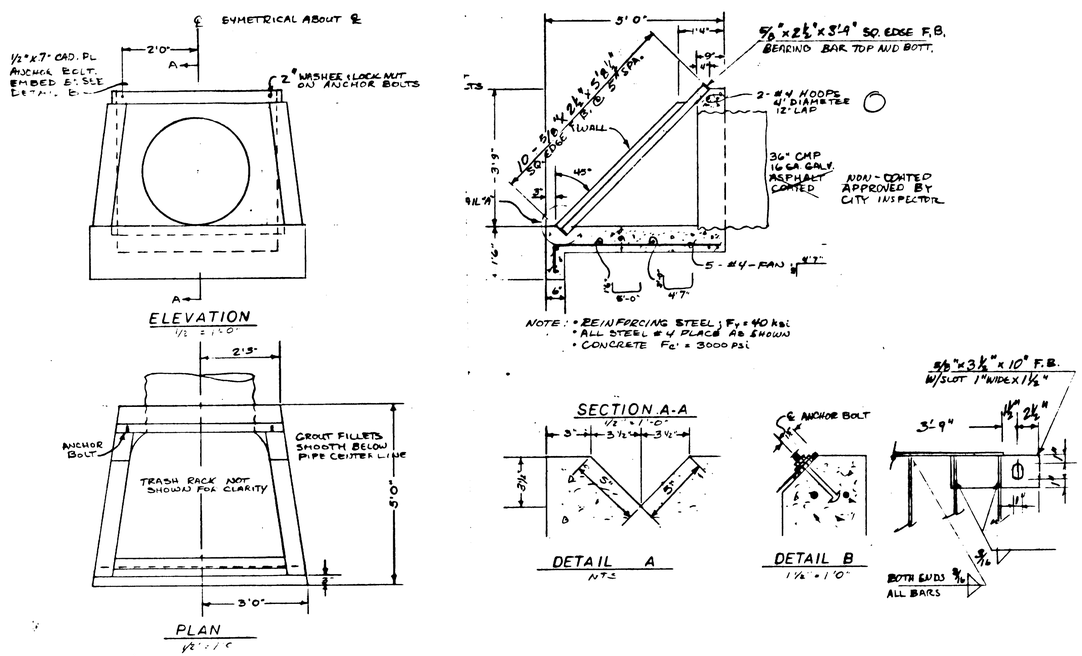

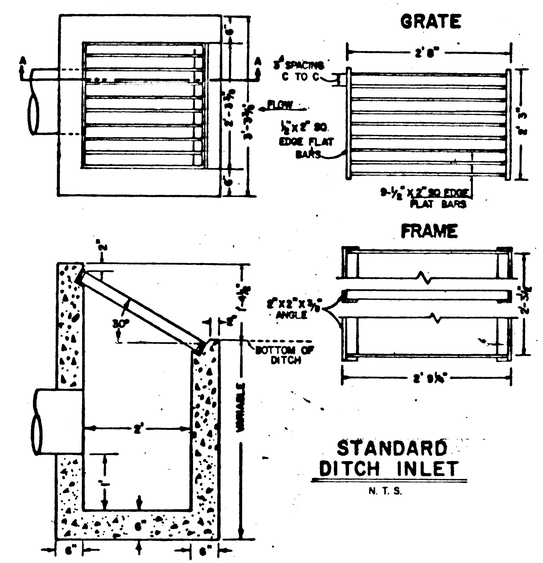

LA GOLONDRINA

DATE	NO.	REVISION	DRAWN	DESIGNED	CHECKED
			SCALE AS SHOWN	DATE JULY, 1984	
			FILE 83 - 1994 - 1284		

COMPASS CORPORATION
ENGINEERING - SURVEYING - PLANNING
6564 S.E. LAKE ROAD
MILWAUKIE, OREGON 97222
(503) 222-4652
(503) 653-9093

DONALD & MARY JOLLY
21151 S. HORTON RD.
WEST LINN, OREGON 97068 656-5372

STORM SEWER DETAILS

5/5

Willamette Print & Blueprint Company N35482