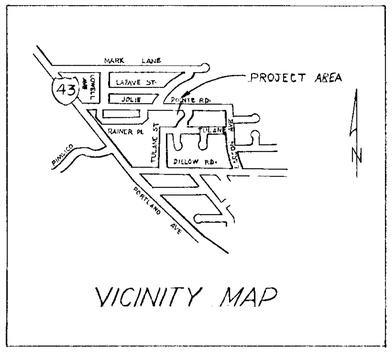

VICINITY MAP

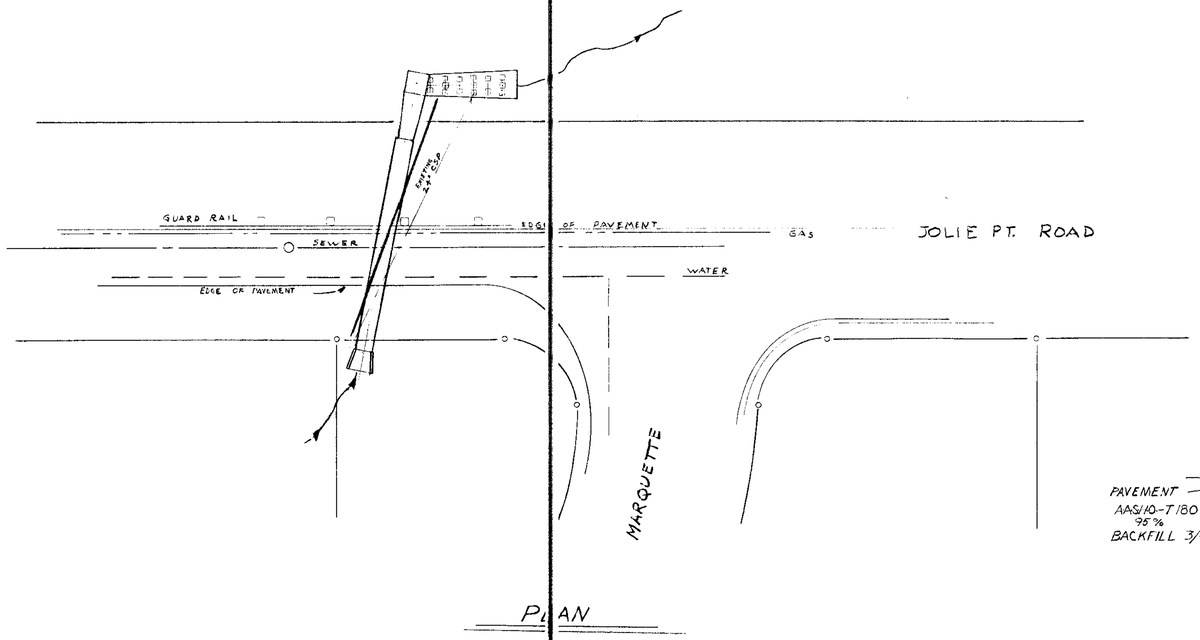

PLAN

SCALE
1" = 20'

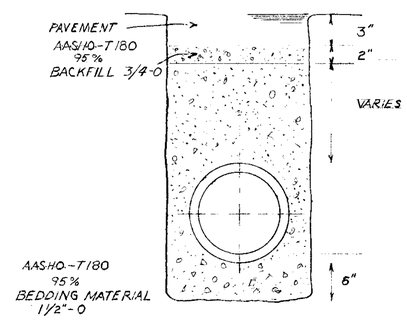

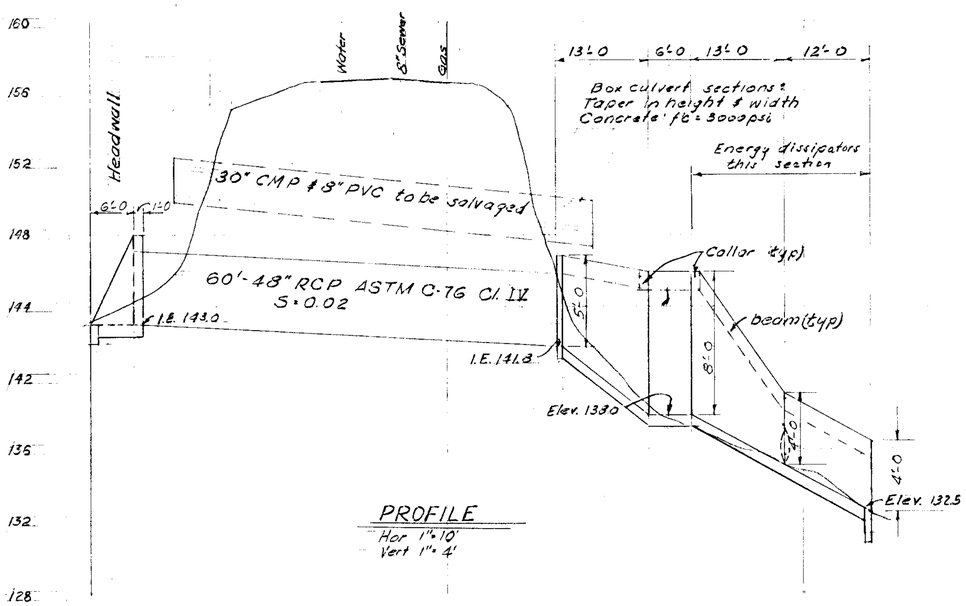

PROFILE
Hor 1" = 10'
Vert 1" = 4'

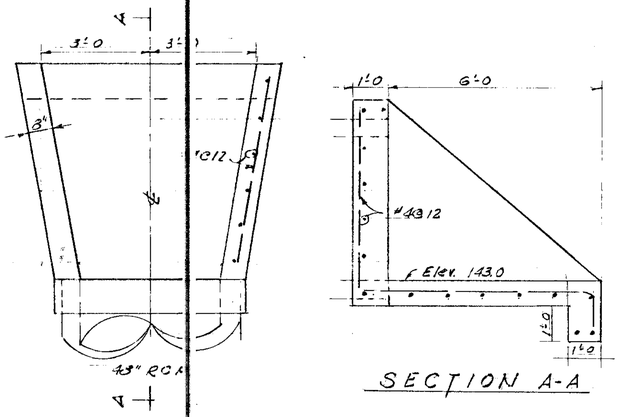

SECTION A-A

HEADWALL DETAIL
Scale 1/2" = 1'-0

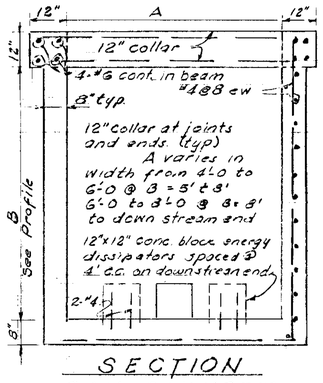

SECTION
BOX CULVERT

REGISTERED PROFESSIONAL ENGINEER 4472 OREGON OCT. 30, 1979 J. WAYNE DAIGLE

DESIGNED J.W.D DRAWN J.W.D. SCALE NOTED DATE 9-79 CHECKED J.W.D	PUBLIC WORKS DEPARTMENT WEST LINN, OREGON	STORM SEWER JOLIE POINTE ROAD	PLAN & PROFILE	1/1

DATE NO REVISION BY