HAVERHILL

NOTES:

1. CONTRACTOR SHALL REMOVE AND DISPOSE OF ALL CLEARED AND GRUBBED MATERIAL, INCLUDING BUT NOT LIMITED TO, TREES, STUMPS, LIMBS, ROOTS, BRUSH, AND DEBRIS. ALL CLEARED AND GRUBBED MATERIAL SHALL BE DISPOSED OF OFF SITE IN ACCORDANCE WITH ALL STATE, FEDERAL, AND LOCAL REGULATIONS. NO ON-SITE DISPOSAL OF CLEARED AND GRUBBED MATERIAL IS ALLOWED.
2. SUBGRADE AND AGGREGATE BASE (PRIOR TO PAVING) SHALL BE PROOF ROLLED, IN THE PRESENCE OF THE ENGINEER AND THE CITY OF WEST LINN. INSPECTOR, USING A TEN-YARD DUMP TRUCK LOADED WITH 3/4"-0" CRUSHED ROCK.
3. ALL UNDERGROUND UTILITIES, INCLUDING WATER SERVICES, AND UTILITY CROSSINGS SHALL BE CONSTRUCTED PRIOR TO SUBGRADE PROOF ROLL AND PLACEMENT OF CURBS.
4. CONFLICTS MAY OCCUR AT CATCH BASIN LATERALS DURING WATER-LINE CONSTRUCTION. THE CONTRACTOR SHALL EXPOSE CATCH BASIN LATERALS IN ADVANCE OF WATERLINE CONSTRUCTION TO AVOID CONFLICTS.

BENCH MARK

ELEVATION: 667.224 (CITY OF WEST LINN DATUM)

2-INCH PIPE WITH BRASS PLUG IN WATER BOX. 93.5 FEET EAST ON ROSEMONT ROAD FROM THE INTERSECTION OF ROSEMONT, PARKER AND SANTA ANITA DRIVE. 17 FEET SOUT OF EDGE OF PAVEMENT.

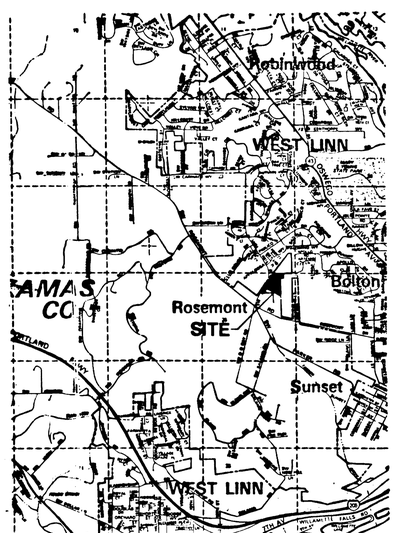

VICINITY MAP

GENERAL NOTES

1. ALL CONSTRUCTION AND MATERIAL INCLUDED IN THIS CONTRACT SHALL COMPLY WITH THE CURRENT A.P.W.A. STANDARDS AND SPECIFICATIONS, UNLESS OTHERWISE DETAILED OR SPECIFIED.
2. PRIOR TO ANY CONSTRUCTION, LOCATIONS OF EXISTING UTILITIES SHALL BE VERIFIED BY THE CONTRACTOR. WHEN ACTUAL CONDITIONS DIFFER FROM THOSE NOW ON THE PLANS, THE CONTRACTOR SHALL NOTIFY THE ENGINEER PRIOR TO PROCEEDING WITH CONSTRUCTION.
4. EXCAVATION OF THE ROADWAY AREA SHALL BE TO THE LINE AND GRADE AS SHOWN ON THE PLANS AND WILL BE UNCLASSIFIED.
5. ROCKS LARGER THAN 12 INCHES IN DIAMETER, ROOTS, BRUSH AND REFUSE OF ANY KIND SHALL BE EXPORTED AND DISPOSED BY THE CONTRACTOR, UNLESS OTHERWISE DIRECTED BY THE ENGINEER, AT NO EXTRA COST TO THE OWNER.
6. DURING THE COURSE OF CONSTRUCTION, THE CONTRACTOR SHALL USE SUCH EROSION CONTROL MEASURES AS NECESSARY TO PREVENT SILTING EXISTING PUBLIC STREETS OR STORM DRAINS AND ADJACENT PROPERTIES. THESE MEASURES MAY INCLUDE PLACEMENT OF STRAW BAILS OR OTHER MEANS APPROVED BY THE ENGINEER. THE COST OF SUCH MEASURES SHALL BE CONSIDERED INCIDENTAL TO THE CONSTRUCTION OF STREETS AND PIPING SYSTEMS AND SHALL NOT REQUIRE DIRECT PAYMENT.
7. CONTRACTOR SHALL NOT CUT ANY TREES LARGER THAN 6 INCHES IN DIAMETER WITHOUT APPROVAL OF **CITY ENGINEER**
8. SUBGRADE, GRANULAR TRENCH BACKFILL BASE ROCK AND TOP COURSE WITHIN RIGHT-OF-WAY AREA SHALL BE COMPACTED TO NOT LESS THAN 95 PERCENT OF MAXIMUM DENSITY AS DETERMINED BY A.A.S.H.O. T-99.
9. ALL DUCTILE IRON PIPE IS TO BE TYTON JOINT CLASS 52.
10. ANY AREAS ACCEPTING FILL SHALL BE STRIPPED OF ORGANIC MATERIAL. FILL SHALL BE PLACED IN 8-INCH LAYERS AND COMPACTED TO 95 PERCENT RELATIVE MAXIMUM DENSITY A.A.S.H.T.O. T-99. NATIVE FILL SHALL BE FREE FROM ORGANIC MATERIAL AND ROCKS OVER 12 INCHES IN DIAMETER (STREET AREAS).
11. ALL CONCRETE IS TO HAVE MINIMUM 3,000 PSI COMPRESSION STRENGTH AT 28 DAYS.
12. STANDARD, WHEELCHAIR/BICYCLE RAMPS SHALL BE CONSTRUCTED AS INDICATED AT ALL CURB RETURNS AND INTERMEDIATE POINTS NOTED ON THE PLANS.
13. CONTRACTOR SHALL EXCAVATE AND BACKFILL TRENCHES FOR PRIVATE UTILITIES AND TO COORDINATE THE WORK WITH THE UTILITY COMPANIES. THE COSTS OF COORDINATION WITH CABLE UTILITY COMPANIES IS CONSIDERED TO BE INCIDENTAL TO THE COST OF TRENCHING.
14. ALL TRENCHING AND PIPE PLACEMENT SHALL BE PER DETAIL ON THE DETAIL SHEET.
15. ALL CONCRETE SEWER PIPE SHALL BE A.S.T.M. C-14 CLASS 3 UNLESS OTHER WISE NOTED.
16. STORM DRAIN PIPE MAY BE EITHER TONGUE AND GROOVE MORTARED JOINT OR BELL AND SPIGOT WITH GASKET.
17. ALL POWER POLES SHALL BE MOVED BY UTILITY COMPANIES. THE CONTRACTOR SHALL COORDINATE THIS EFFORT AT NO ADDITIONAL COST TO THE OWNER.
18. WATERLINE SHALL BE CONNECTED AND TESTED TO THE SATISFACTION OF THE CITY.
19. CONCRETE THRUST BLOCKING SHALL BE PROVIDED AT ALL WATERLINE FITTINGS. BLOCKING SHALL BE POURED AGAINST UNDISTURBED EARTH AND CLEAR OF JOINT ACCESSORIES. BEARING AREA OF THRUST BLOCK SHALL BE COMPUTED ON THE BASIS OF SOIL BEARING PRESSURE.
20. PVC GRAVITY PIPE SHALL MEET THE REQUIREMENTS OF A.S.T.M. D-3034.
21. SANITARY LATERALS SHALL BE MARKED ON THE TOP OF CURB WITH AN "S" STAMPED IN CURB WATER LINES SHALL BE MARKED WITH A "W" STAMPED ON TOP OF CURB.
22. USE SINGLE STRAP SERVICE SADDLES ON ALL WATER SERVICE.

INDEX OF SHEETS

1 TITLE SHEET
2 STREET PLAN, STORM DRAIN PLAN & GRADING
3 STREET PROFILES
4 INTERSECTION DETAILS
5 STORM DRAIN PROFILES
6 SANITARY SEWER PLAN & WATER PLAN
7 SANITARY SEWER PROFILES
8 DETAILS
9 DETAILS

These As-Built Plans were compiled from survey data, data collected from others, and periodic observation during construction. It is suggested that these plans be used in conjunction with field verification of location and elevations of improvements in question. These plans are an accurate record of public improvements to the best of my information, knowledge & belief.

Signature

Date 2-15-07

AS BUILT

BY: WK DATE: 4-16-07

DEF DESIGNED	2/87 DATE
DRF DRAWN	2/87 DATE
GOE/KLL CHECKED	DATE

REVISIONS

Kenneth A. Kelso

TITLE SHEET

HAVERHILL
DUNCAN PROPERTIES INC.
2700 N.W. 185TH. # 2082
PORTLAND, OREGON 97229

otak

1 / 9
SHEET NO.

1437
PROJECT NO.

HAVERHILL 87

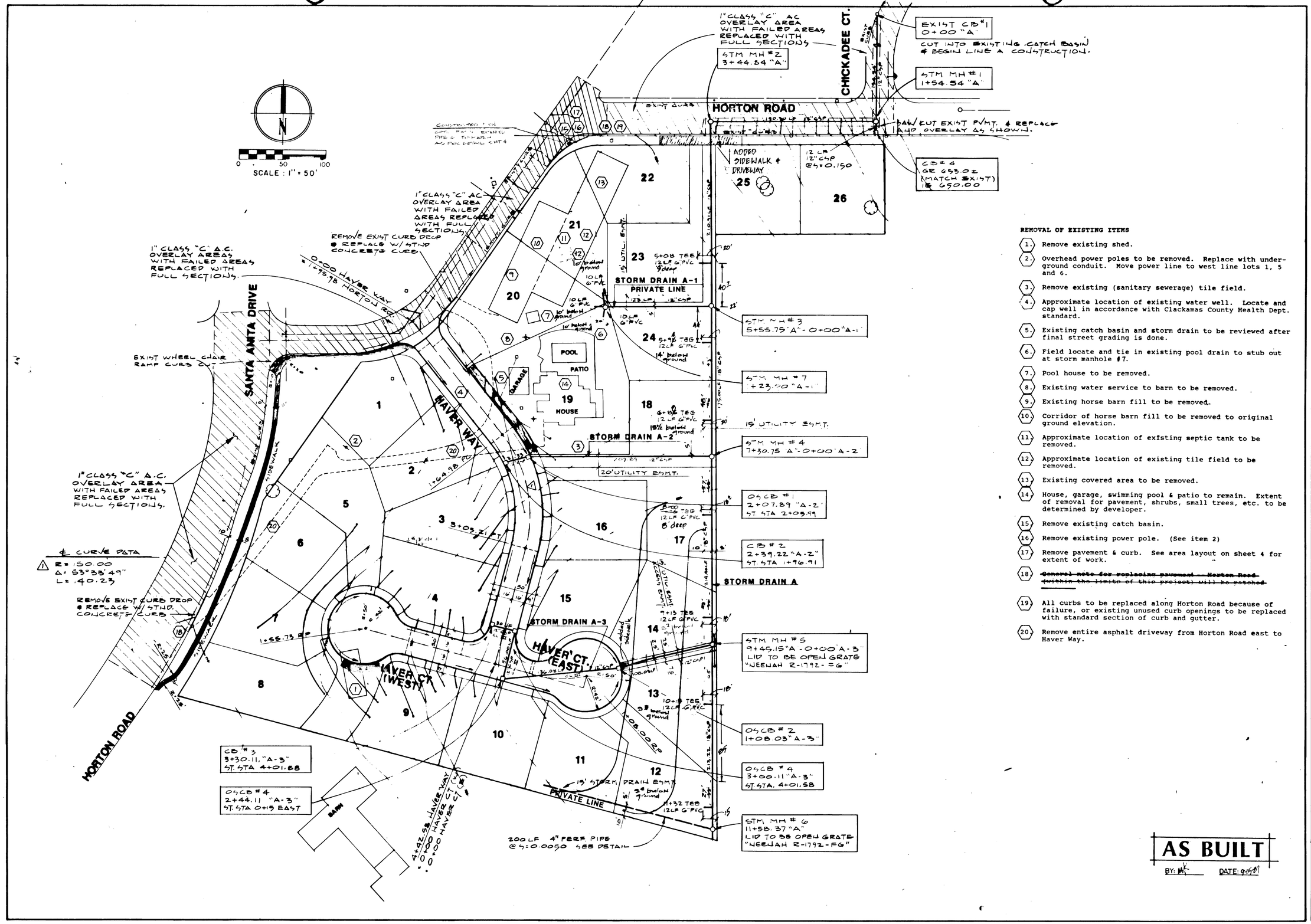

REMOVAL OF EXISTING ITEMS

1. Remove existing shed.
2. Overhead power poles to be removed. Replace with underground conduit. Move power line to west line lots 1, 5 and 6.
3. Remove existing (sanitary sewerage) tile field.
4. Approximate location of existing water well. Locate and cap well in accordance with Clackamas County Health Dept. standard.
5. Existing catch basin and storm drain to be reviewed after final street grading is done.
6. Field locate and tie in existing pool drain to stub out at storm manhole #7.
7. Pool house to be removed.
8. Existing water service to barn to be removed.
9. Existing horse barn fill to be removed.
10. Corridor of horse barn fill to be removed to original ground elevation.
11. Approximate location of existing septic tank to be removed.
12. Approximate location of existing tile field to be removed.
13. Existing covered area to be removed.
14. House, garage, swimming pool & patio to remain. Extent of removal for pavement, shrubs, small trees, etc. to be determined by developer.
15. Remove existing catch basin.
16. Remove existing power pole. (See item 2)
17. Remove pavement & curb. See area layout on sheet 4 for extent of work.
18. ~~General note for replacing pavement - Horton Road (within the limits of this project) will be patched.~~
19. All curbs to be replaced along Horton Road because of failure, or existing unused curb openings to be replaced with standard section of curb and gutter.
20. Remove entire asphalt driveway from Horton Road east to Haver Way.

DEF DESIGNED	2/87 DATE
DEF DRAWN	2/87 DATE
GCE/KW CHECKED	DATE

REVISIONS
Added Asbuilt Measurements 8-29-97 KW

Kenneth A. Wilson

STREET PLAN, STORM DRAIN PLAN & GRADING

HAVERHILL
DUNCAN PROPERTIES INC.
2700 N.W. 185TH. # 2082
PORTLAND, OREGON 97229

otak

2 / 9
SHEET NO.

1437
PROJECT NO.

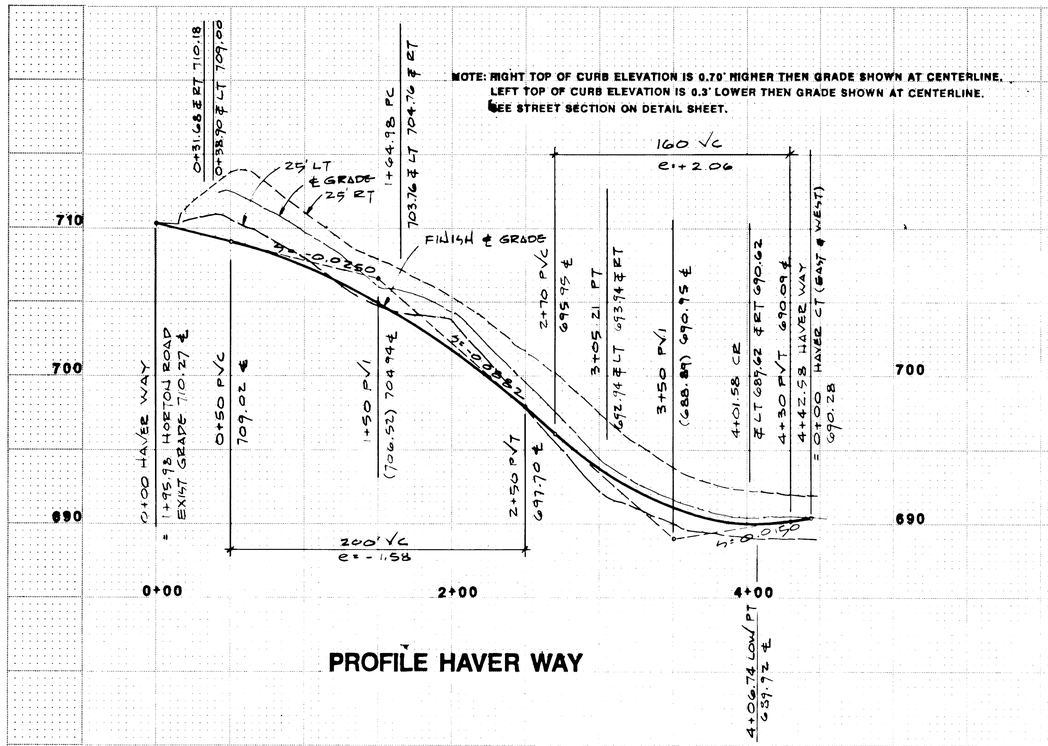

PROFILE HAVER WAY

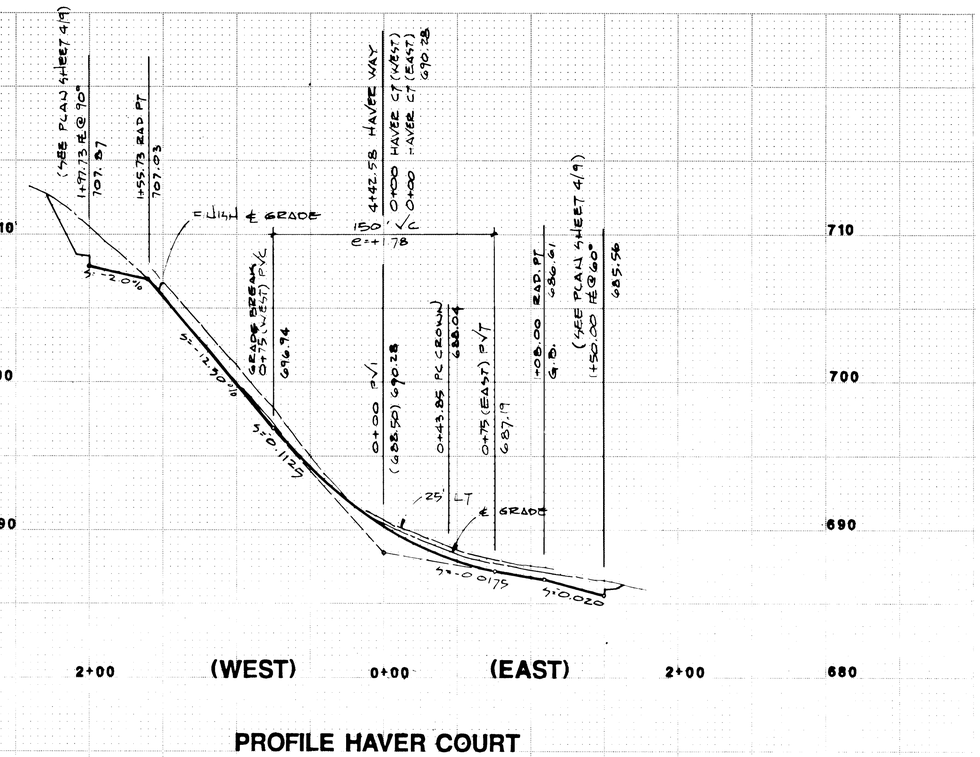

PROFILE HAVER COURT

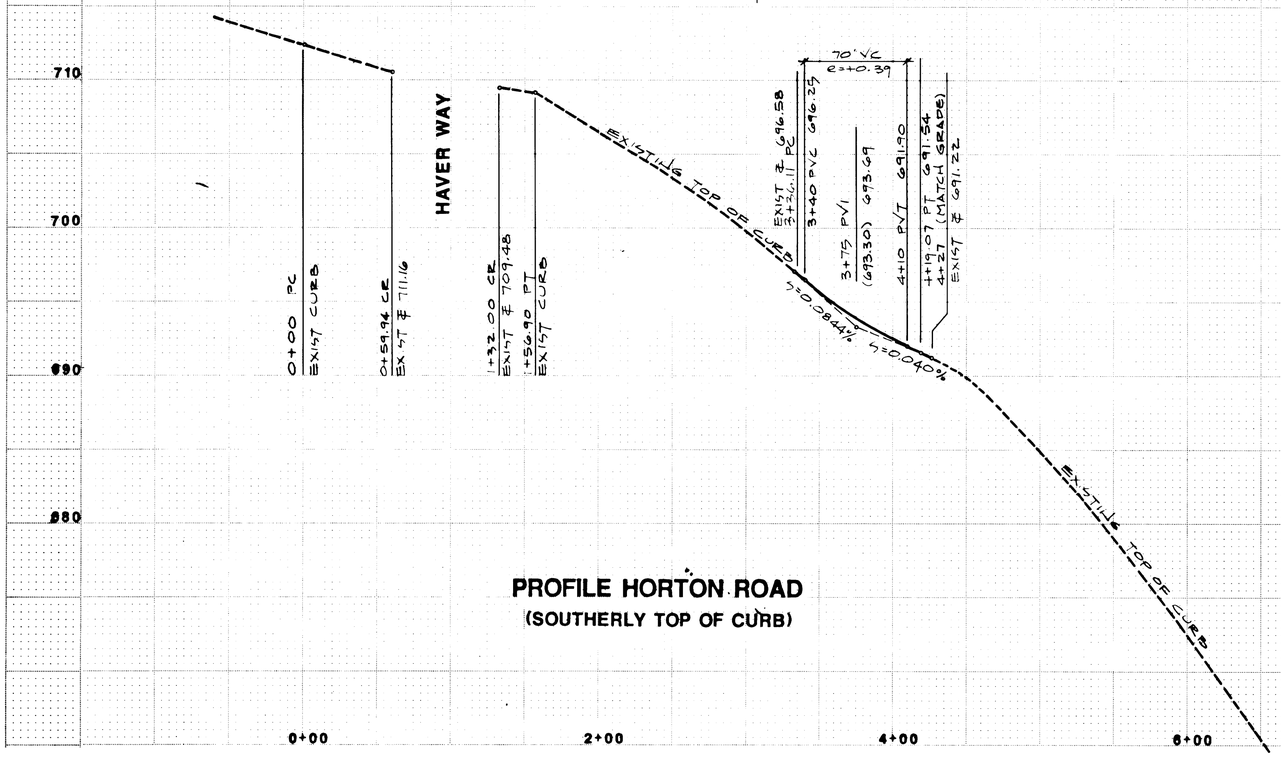

PROFILE HORTON ROAD
(SOUTHERLY TOP OF CURB)

SCALE: HORIZ. 1" : 50'
VERT. 1" : 5'

AS BUILT
BY: MKK DATE: 9-16-97

DEF DESIGNED	2/87 DATE
DEF DRAWN	2/87 DATE
GOE/KW CHECKED	DATE

REVISONS

STREET PROFILES

HAVERHILL
DUNCAN PROPERTIES INC.
2700 N.W. 185TH. # 2082
PORTLAND, OREGON 97229

otak

3 / 9
SHEET NO.

1437
PROJECT NO.

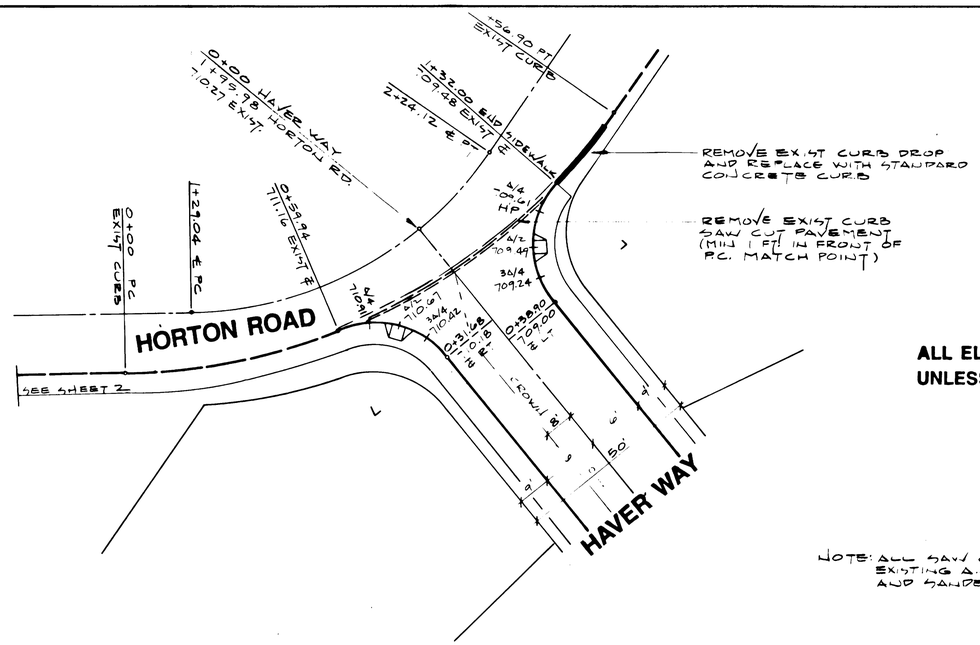

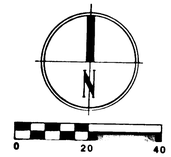

ALL ELEVATIONS ARE TOP OF CURB UNLESS SHOWN OTHERWISE.

NOTE: ALL SAW CUT EDGED WITH EXISTING A.C. WILL BE TAC AND SANDED TO SEAL.

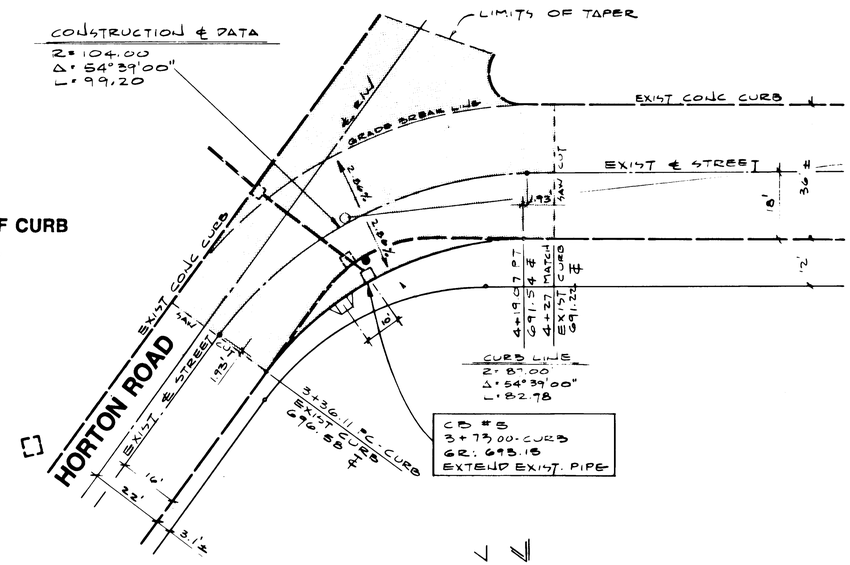

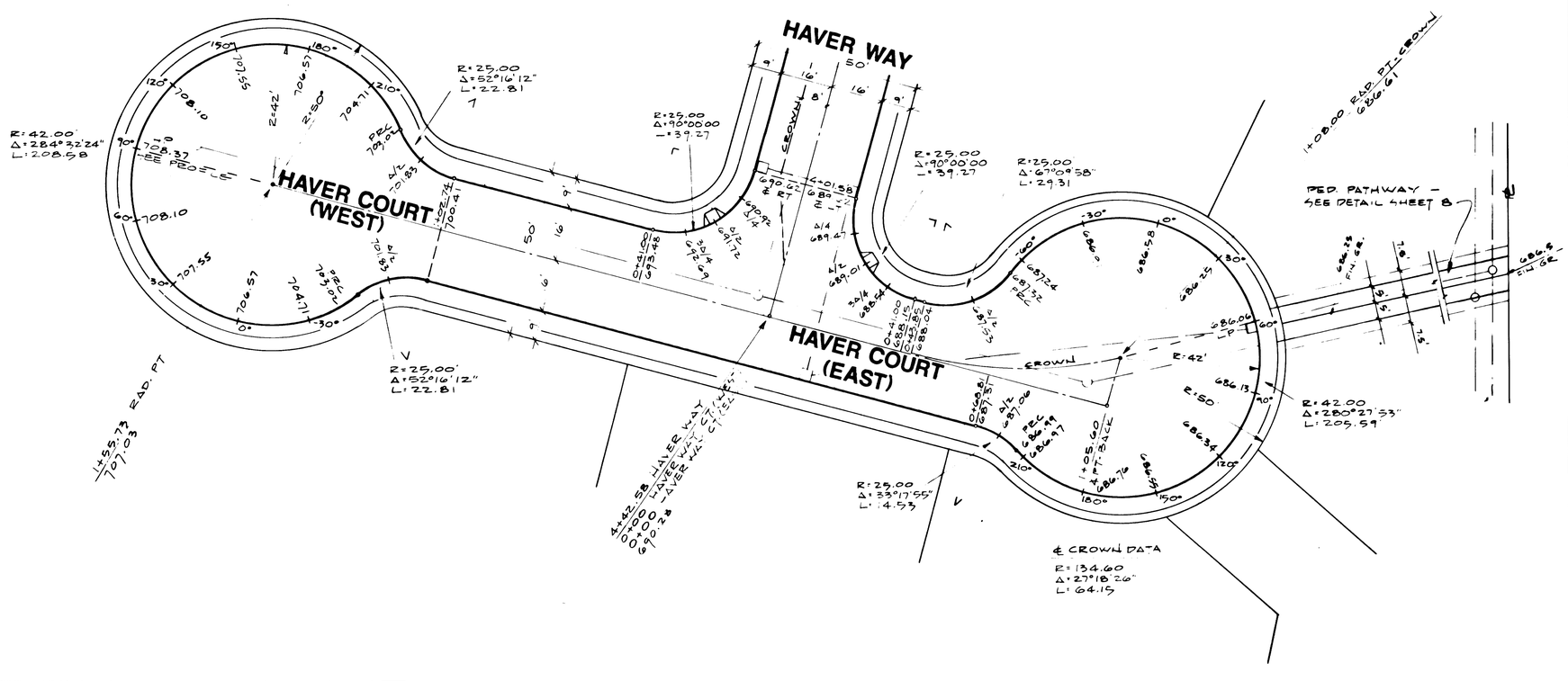

DRF	2/87
DESIGNED	DATE
DRF	2/87
DRAWN	DATE
GOE/KW	
CHECKED	DATE

REVISIONS

Kenneth A. Nelson

INTERSECTION DETAILS

HAVERHILL
DUNCAN PROPERTIES INC.
2700 N.W. 185TH. # 2082
PORTLAND, OREGON 97229

otak

4 / 9
SHEET NO.

1437
PROJECT NO.

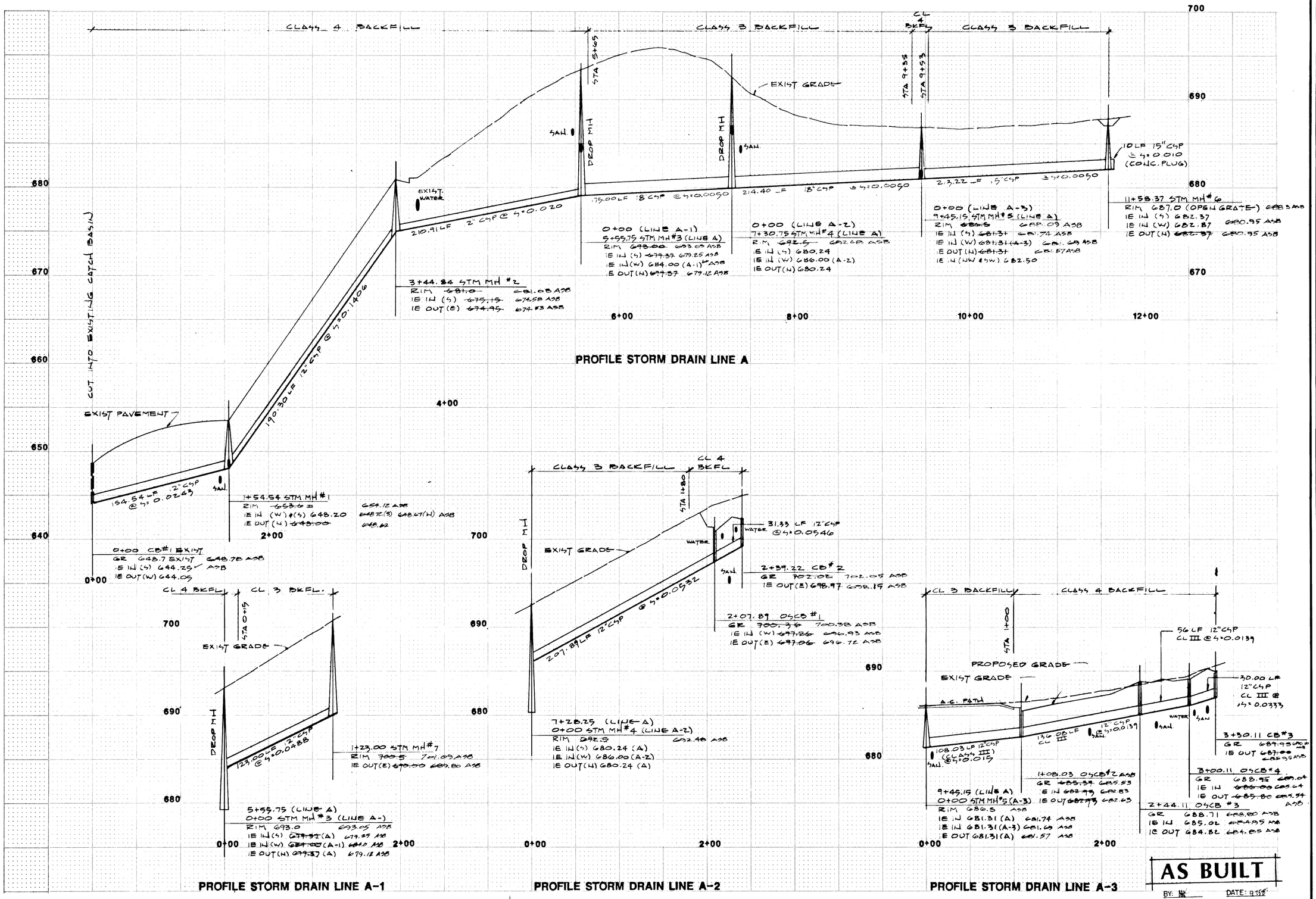

AS BUILT

BY: [illegible] DATE: 9/15/87

DRF DESIGNED	2/87 DATE
DRF DRAWN	2/87 DATE
GOE/KN CHECKED	DATE

REVISONS MK
9-15-87 Added Amount Info

STORM DRAIN PROFILES

HAVERHILL
DUNCAN PROPERTIES INC.
2700 N.W. 185TH. # 2082
PORTLAND, OREGON 97229

otak
otak engineers surveyors

5 / 9
SHEET NO.

1437
PROJECT NO.

WATER LINE NOTES

1. 4-INCH TAPPING SADDLE (ROCKWELL 622 OR EQUAL) AND 4-INCH FL X MJ TAPPING VALVE.
2. ABOVE GROUND PACKAGED PUMP STATION WITH PARALLEL PUMPS AND POWER GENERATOR.
3. ONE 4-INCH FLG. X M GATE VALVE
4. 12-INCH TAPPING SADDLE (ROCKWELL 622 OR EQUAL) AND 6-INCH FL X MJ TAPPING VALVE. DO NOT DISTURB EXISTING THRUST BLOCK AREA.
5. 4-INCH MJ 90 DEGREE ELBOW WITH THRUST BLOCKING.
6. ONE 4-INCH X 4-INCH ALL FLG. TEE; ONE 4-INCH FLG. X MJ GATE VALVE; ONE 6-INCH X 4-INCH ALL FLG. TEE.
7. ONE FIRE HYDRANT ASSEMBLY, COLOR TO BE YELLOW "RODDA #2202". MJ CAP FOR 6-INCH LINE.
8. 4-INCH MJ 22-1/2 DEGREE ELBOW WITH THRUST BLOCKING.
9. ONE 4-INCH X 4-INCH ALL FLG. TEE; ONE 4-INCH FLG. X MJ GATE VALVE, 1017N MJ CAP FOR 4-INCH LINE.
10. ONE BLOW-OFF ASSEMBLY.
11. ONE 4-INCH X 4-INCH ALL FLG. TEE; TWO 4-INCH FLG. X MJ GATE VALVES, WITH THRUST BLOCKING.
12. 12-INCH TAPPING SADDLE (ROCKWELL 622 OR EQUAL) AND 6-INCH FLG. X MJ TAPPING VALVE.
13. ONE FIRE HYDRANT ASSEMBLY, COLOR TO BE YELLOW "RODDA #2202"; ONE 6-INCH X 6-INCH ALL FLG. TEE; ONE 6-INCH FLG. X M GATE VALVE; ONE 6-INCH X 4-INCH FLG. X MJ LINE REDUCER; ONE 4-INCH MJ 90-DEGREE ELBOW WITH THRUST BLOCKING.
14. INSTALL ONE 4-INCH FLG. X MJ GATE VALVE ON EACH SIDE OF PACKAGED PUMP STATION IN 4-INCH LINE.

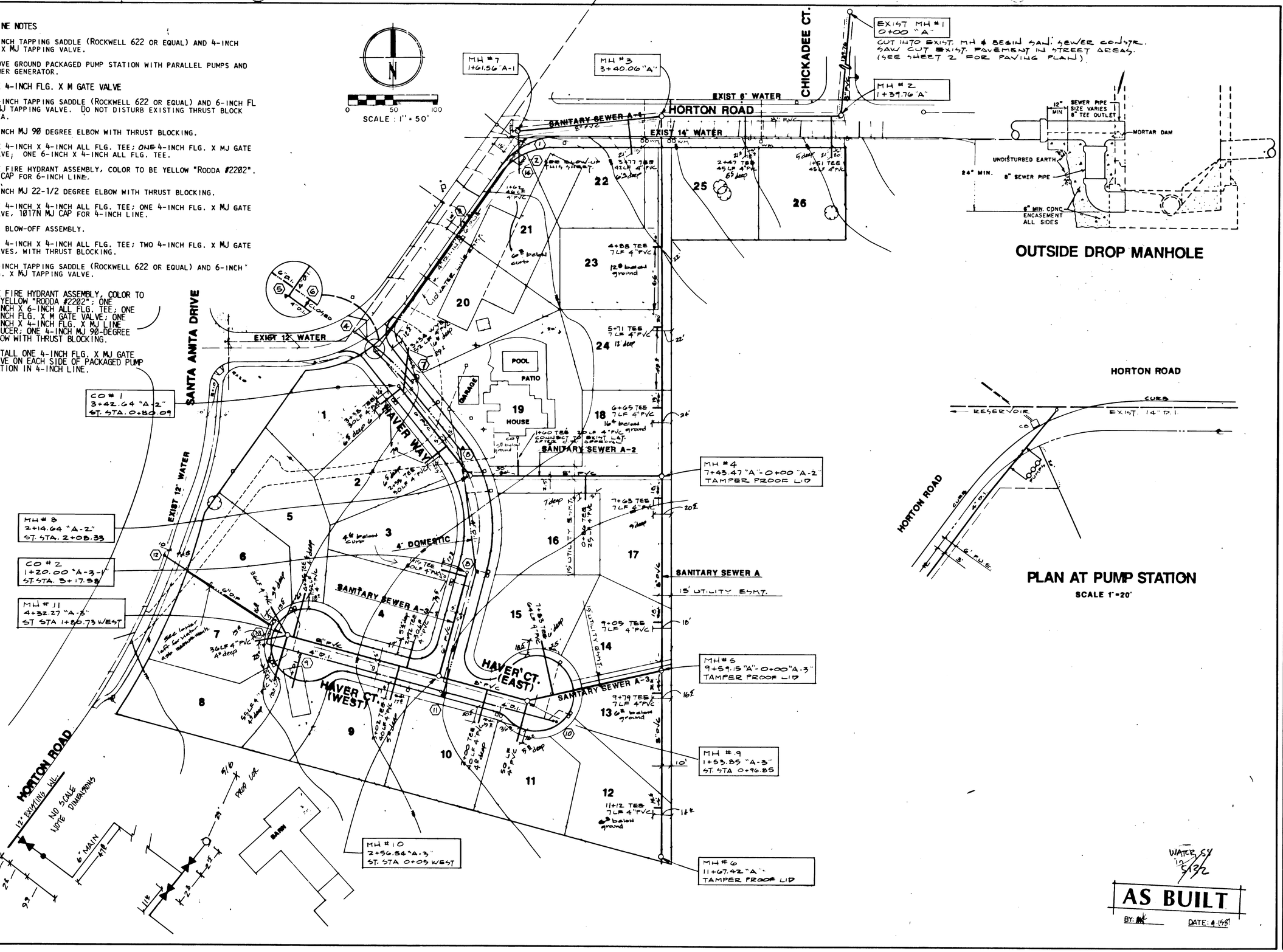

OUTSIDE DROP MANHOLE

PLAN AT PUMP STATION

SCALE 1"=20'

AS BUILT

BY: [illegible] DATE: 4-1-89

WATER SY 10 5/3/2

DRF DESIGNED	2/87 DATE
DRF DRAWN	2/87 DATE
GOE/KN CHECKED	DATE

REVISIONS: Added A-Shift Note 8/31/87 [illegible]

Kenneth A. Nelson

SANITARY SEWER PLAN & WATER PLAN

HAVERHILL

DUNCAN PROPERTIES INC.
2700 N.W. 185TH. # 2082
PORTLAND, OREGON 97229

otak

6 / 9
SHEET NO.

1437
PROJECT NO.

SPECIFICATIONS FOR THE
BASE MOUNTED WATER
BOOSTER PUMP SYSTEM

1.00 GENERAL PROVISIONS

1.01 SCOPE: Refer to specific station specifications

1.02 MANUFACTURE: These specifications describe a system, as manufactured by HYDRONIX, INC., of Portland, Oregon. This is done to indicate the type, function, and standard of design, efficiency, and quality required, and shall not be construed as eliminating from competition other manufacturers with comparable and equal equipment.

1.03 TESTING: The completed pump station shall be given an operation test of all equipment at the factory to check for excessive vibration, for leaks in all piping and seals, and for correct operation of the automatic control system and all auxiliary equipment.

2.00 BASE

2.01 The booster system shall be mounted on an 18" x 80" common channel iron base, primed and painted with industrial enamel. A fabricated channel panel mounting stand shall also be provided.

3.00 PUMPS

3.01 OPERATING CONDITIONS

3.02 JOCKEY PUMP: The Jockey Pump shall be capable of delivering a capacity of 50 GPM @ 200' T.D.H. The rated horsepower shall be 5 HP at 3500 RPM.

3.03 LEAD/LAG PUMPS: Each of the Lead/Lag pumps shall be capable of delivering a capacity of 100 GPM @ 200 T.D.H. The rated horsepower of each motor shall be 10 HP at 3500 RPM.

3.04 SYSTEM HEAD: The pump station shall be provided with a minimum suction pressure between 8 and 17 PSI, and deliver a minimum station discharge pressure of 60 psi

3.05 CONSTRUCTION

3.06 PUMPS: The pumps shall be horizontal, close coupled, cast iron, Bronze fitted, end suction centrifugal pumps, with back pull-out design to facilitate removing of the complete rotating assembly without disturbing the piping. The Jockey Pump shall be Cornell 1-W 5HP, 3600 RPM. The shaft shall be of medium carbon heat-treated, stress relieved steel for a maximum deflection at the impeller of .003 under highest radial load, and fitted with a stainless steel shaft sleeve and carbon/ceramic mechanical seal.

3.07 MOTORS: The pump motors shall be standard close-coupled open dripproof, ball bearing, induction motors. The motors shall be of NEMA design 3, with normal starting torque and low starting current, Class 3 insulation, rated for continuous duty, and a 1.15 service factor. Motors shall be suitable for 3 Phase, 60 Hertz, 460 Volt power. Motors to be sealed, dust and water proof.

3.08 MAINTENANCE PERFORMANCE: The pump station manufacturer's representative shall demonstrate to the owner's satisfaction that due consideration has been given to reduced maintenance cost by incorporating industrial standard "off-the-shelf" components, and the following features. No special tools shall be required for replacement of any components within the pump.

4.00 ELECTRICAL

4.01 CONTROL PANEL: The electrical controls shall be mounted in a NEMA I enclosure fabricated of steel. Enclosure door will be hinged and equipped with closure latching hardware. The enclosure will bear an U.L. Label of an enclosure manufacturer.

The control enclosure shall be provided with a removable back panel for mounting the control components.

For the safety and convenience of the operator, "screw-cover" removable panel doors will not be acceptable as an equal to a hinged cover.

All components shall be securely mounted in the enclosure, components labeled, and wires numbered to indicate functions and provide a means of tracing.

All components will bear a U.L. Label. All wiring, workmanship, and schematics will comply with standards set forth by the National Electric Code (NEC) and Underwriters Laboratory (U.L.).

The controls shall bear an Underwriter's Laboratory (U.L.) Label for "ENCLOSED INDUSTRIAL CONTROL PANEL" before being shipped from the manufacturer or other approved recognized testing laboratory to insure a standard of quality for the protection of the operator.

4.02 WIRING / CONDUIT: All pilot duty control circuit wiring, inside the control panel, shall be of MTW, 600 Volt rated, 18 gauge, 90 degrees Celsius temperature rating, with stripped ends 'tinned' to prevent fraying in accordance with U.L. standards. All control, or accessory wiring, entering, exiting, or to-the-door controls, shall terminate on a terminal block mounted on the back panel, except for main service breakers or approved disconnect and motor power wires which shall be wired continuously between the motor and the starter overload block. All conduit and connectors ,inside the station, is to be U.L. listed and installed in accordance with N.E.C. standards. Conduit shall be either E.M.T. or liquid tight, flexible metal type with P.V.C. cover.

All current carrying wire and conduit shall be properly sized in accordance with N.E.C.

4.03 MOTOR PROTECTION: Each pump motro shall be protected by a properly sized combination circuit breaker and motor starter. Provide lightning protection.

The circuit breakders will be molded case, air break type, sized in accordance with N.E.C. for the proper amperage and sealed by the manufactruere after calibration to prevent tampering. All circuit breakers sahll bear U.L. Listing.

The magnetic motor starter is to be of open across-the line type bearing the U.L. Label for motor horsepower. All auxiliary contacts sahll be accessible from the front. Starter contacts shall be provided with an arc chute to extend the life of the contacts.

All motor starters ahsll be equipped with under-voltage release and ambient compensated overload protection. The overload relays will be provided with amnual reset and overload trip "test" features. Final trip setting shall be made on start-up to actual field operating conditions using a field adjustable auto-calibration dial.

Meltong alloy heaters, which cannot be calibrated to field conditions, are not acceptable.

An overload reset button will be mounted through the door to permit resetting of the starter overload without opening the panel door.

4.04 CONTROLS

4.05 Controls to re-start automatically after a prolonged power failure or after a low input/output water pressure/flow condition has been corrected.

Constant pressure systems shall be controlled by time delayed, pressure switches of snap action design to avoid false cycling due to momentary pressure surges. The Jockey Pump shall maintain system pressure and low flow demands. The Lead/Lag pumps will alternate to maintain peak flow demands.

5.00 VALVING/PIPING

5.01 The piping manifolds shall be three copper ASTM B88 ending in 4" min. suction and discharge connections.

5.02 GATE VALVES: Each pump shall be provided with two 2NPT, ASTM B62, Bronze screwed gate valves.

5.03 CHECK VALVES: Each pump discharge shall be provided with a 2NPT, ASTM B62, Bronze screwed inline check valve.

6.00 HYDRO-PNEUMATIC TANKS

6.01 The system shall be provided with a Well-X-Troll 82 pre-pressurized, Hydro-Pneumatic tank, 82 gallon total capacity, and 20-gallon usable capacity. The Hydro-Pneumatic tank will be provided with a relief valve preset to 95 PSI.

7.00 EQUIPMENT MANUFACTURE

7.01 In these specifications and accompanying drawings, specific equipment and materials are deemed most suitable for the service anticipated. The Booster system shall be the product of a manufacturer with a minimum of twenty (20) years experience in the design and manufacturing of booster systems. This is not done, however, to eliminate others of equal quality and experience. The contractor shall prepare his bid on the basis of the particular equipment and materials specified for the purpose of determining the low bid.

After the execution of the contract, should the contractor desire to substitute equipment of makes other than those named in the contract, such substitution will be considered for one reason only: The equipment proposed for substitution is superior or equal in construction to that named in the contract, and higher quality has been demonstrated by at least ten (10) years of service in a similar installation.

In the event the contractor obtains the Engineer's approval on equipment other than that for which the station was originally laid out, the contractor shall, at his own expense, make any changes in the structures, buildings, or piping necessary to accommodate the equipment.

8.00 WARRANTY

8.01 The manufacturer of the Booster system shall warrant it to be of quality construction, free from defects in material and factory workmanship.

The booster system shall be warranted for a period of FIVE years to be free from defects and resistant to rust, corrosion, or physical failures occurring in normal service, when installed in accordance with the manufacturer's recommendations.

The pumps, motors, and apparatus shall be warranted for a period of FIVE (5) YEARS, excepting only those items normally consumed in service, such as light bulbs, oil, grease, packing, gaskets, and O-rings. The system manufacturer shall be solely responsible for the booster system and all related components, warranties, and guarantees by the suppliers of various components will not be accepted.

Hydro-Pneumatic tanks shall be warranted for a period of five (5) years.

9.00 ADDITIONAL REQUIREMENTS

9.01 Vault to be: Utility vault 687-LA with 44-332 cover (42" x 42" opening).

9.02 Vault needs a Bilco door type J-5AL, drained through the curb with 1" PVC pipe.

9.03 The system needs a sump pump to be included and drained to curb with a check valve.

9.04 1300 Watt heater unit required.

9.05 All motor controllers are to be included.

9.06 Add interior ladder and light to vault.

9.07 Emergency generator connection is required. (This should be coordinated with the City of West Linn.)

9.08 Emergency pump failure alarm and light system required.

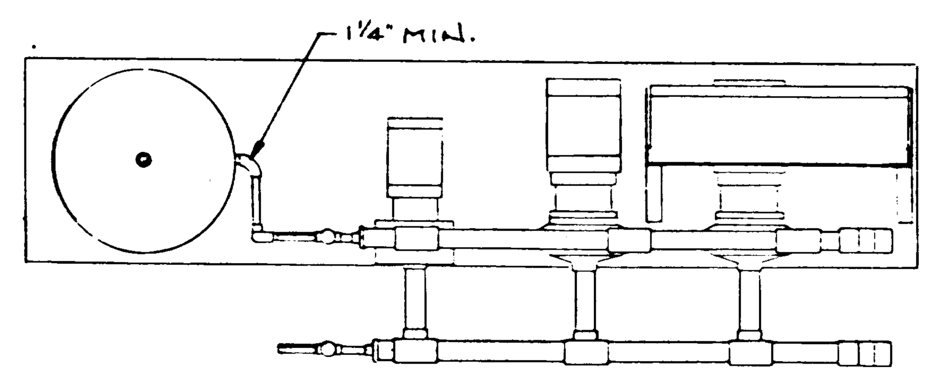

PUMP #	GPM	TDH	HP	RPM	PUMP SUCTION SIZE	PUMP DISCHARGE SIZE	SUCTION VALVE SIZE	DISCHARGE VALVE SIZE
1	50	120	5	3600	1¼	1	2	2
2	100	120	10	3600	1½	1¼	2	2
3	100	120	10	3600	1½	1¼	2	2

POWER SERVICE			
PHASE	HERTZ	VOLTAGE	WIRE
3	60	230	3

SYSTEM PRESSURE (FEET OF HEAD)			
SUCTION	BOOST	DISCHARGE	SHUT-OFF
8-17	—	60	66.6

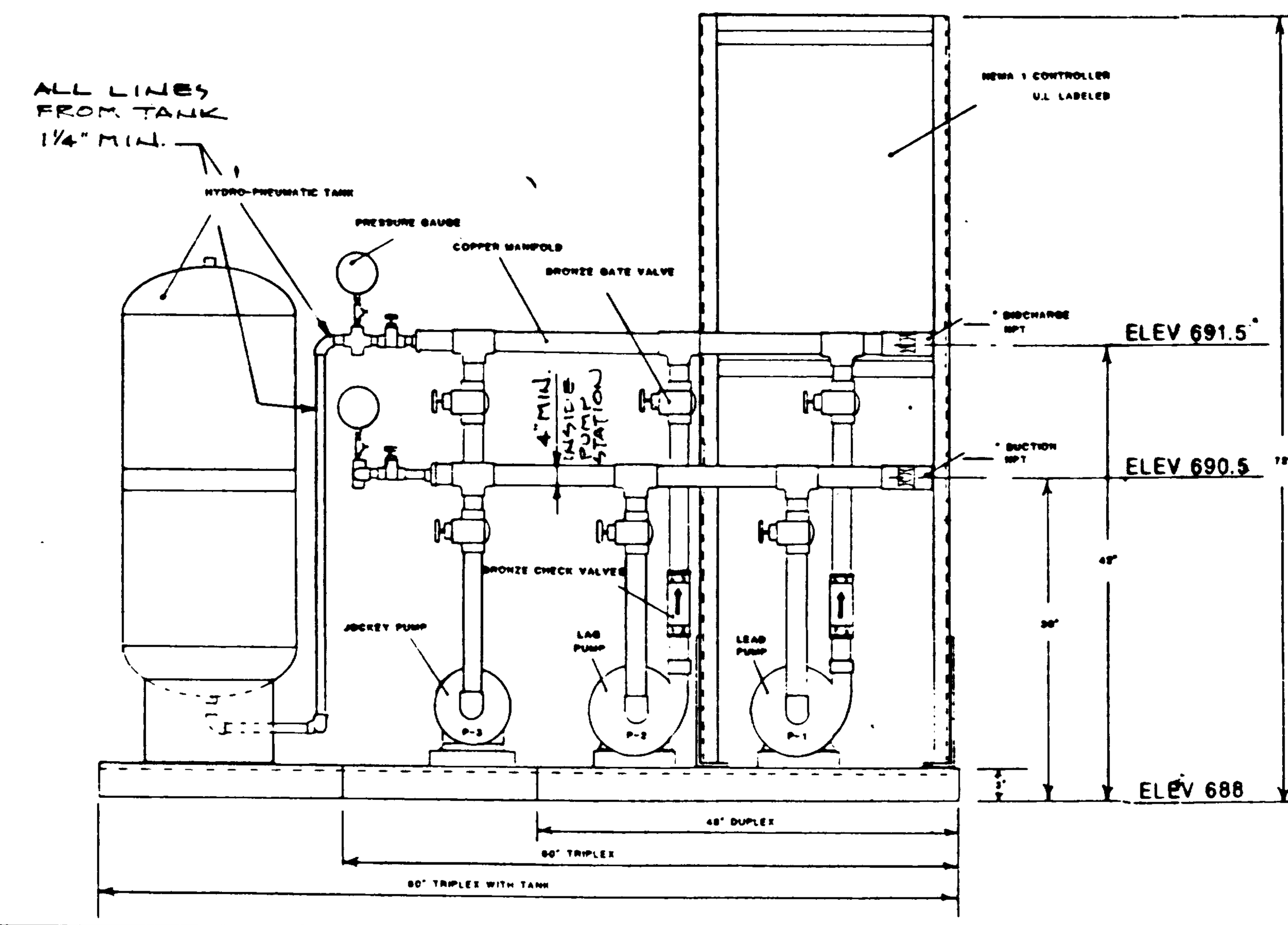

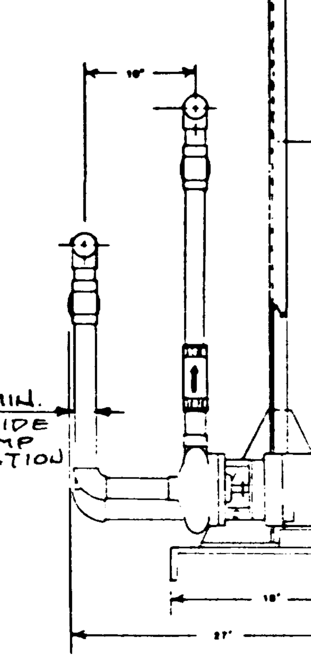

* CONTRACTOR TO CONFIRM ACTUAL DIMENSION WITH SYSTEM MANUFACTURE PRIOR TO INSTALLATION

	DUPLEX SYSTEM
*	TRIPLEX SYSTEM

HYDRONIX INC PORTLAND OR
MODEL 751 BASE MOUNTED WATER BOOSTER SYSTEM

DATE 7-85		DWG BY JWR
SCALE NONE	REVISION 2/87	DWG#

687-LA

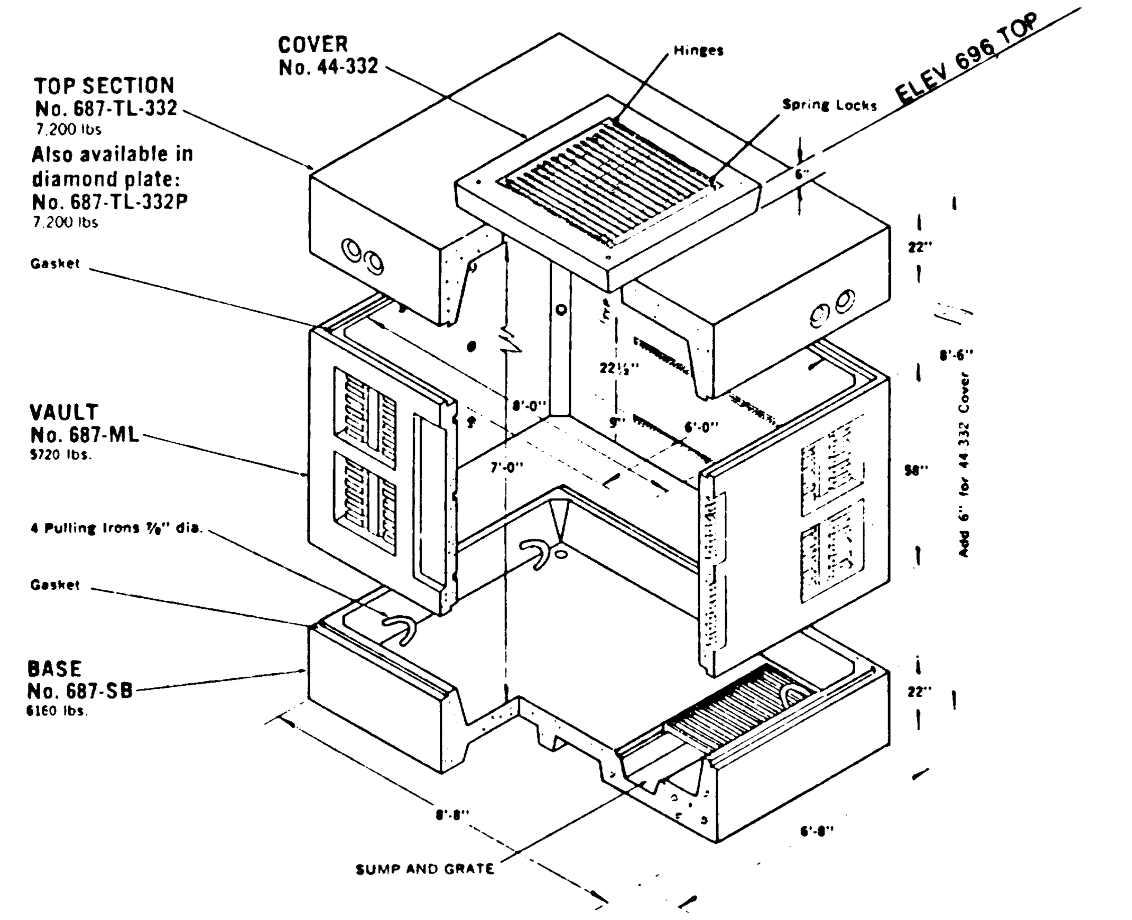

Bilco
INTERIOR / EXTERIOR DOORS

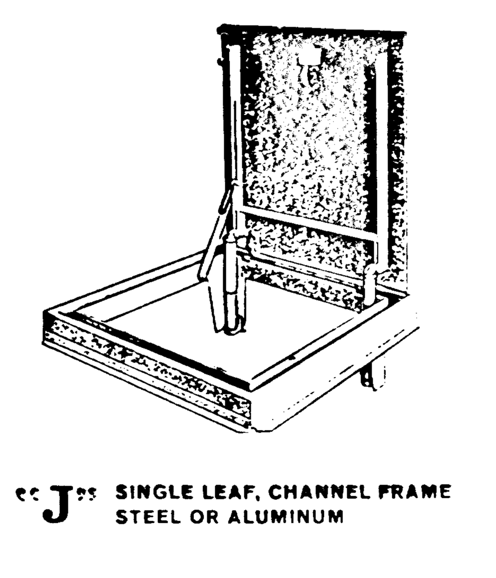

"J" SINGLE LEAF, CHANNEL FRAME STEEL OR ALUMINUM

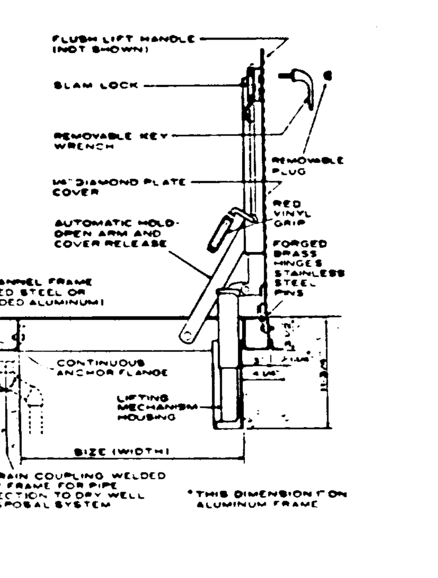

STANDARD SIZES AND WEIGHTS

Type J and JD (Special sizes are available)

Type	SIZE Width	SIZE Length	Material	WT. Lbs.	Type	SIZE Width	SIZE Length	Material	WT. Lbs.
J-1	2'0"	2'0"	Steel	175	JD-2	4'0"	4'0"	Steel	455
J-1AL			Aluminum	60	JD-2AL			Aluminum	160
J-2	2'6"	2'6"	Steel	235	JD-3	4'0"	6'0"	Steel	620
J-2AL			Aluminum	75	JD-3AL			Aluminum	225
J-3	3'0"	2'6"	Steel	270	JD-4	5'0"	5'0"	Steel	645
J-3AL			Aluminum	85	JD-4AL			Aluminum	235
J-4	3'0"	3'0"	Steel	300					
J-4AL			Aluminum	100					
J-5	3'6"	3'6"	Steel	390					
J-5AL			Aluminum	146					

SPECIFICATIONS Type J, Type JD. Access door shall be Type ____________ as manufactured by The Bilco Company, New Haven, Conn. Door leaf shall be ¼" steel (or aluminum*) diamond pattern plate to withstand a live load of 300 pounds per square foot. Channel frame shall be ¼" steel (or aluminum) with an anchor flange around the perimeter. Door(s) shall be equipped with heavy forged brass hinges, stainless steel pins, spring operators for easy operation, and an automatic hold-open arm with release handle. A snap lock with removable handle shall be provided. A 1½" drainage coupling shall be located in the front right corner of the channel frame. Hardware shall be cadmium plated and factory finish shall be prime coat of red oxide applied to steel doors and frames. (For aluminum, substitute: "Mill finish with bituminous coating applied to exterior of the frame.") Installation shall be in accordance with manufacturer's instructions. Manufacturer shall guarantee against defects in material or workmanship for a period of five years.

* For highly corrosive conditions, when so specified, aluminum Types J and JD are available with stainless steel hardware throughout.

AS BUILT
BY: MA DATE: 9-15-87

DESIGNED	DATE
DRF	4/87
DRAWN	DATE
KH	4/87
CHECKED	DATE

REVISIONS

PUMP STATION
PLANS & SPECIFICATIONS

HAVERHILL
DUNCAN PROPERTIES INC.
2700 N.W. 185TH. # 2082
PORTLAND, OREGON 97229

otak — othman tehran kurahashi incorporated — planners engineers surveyors

17355 sw boones ferry road lake oswego oregon 97034 telephone (503) 635-3618

6A / 9
SHEET NO.

1437
PROJECT NO.

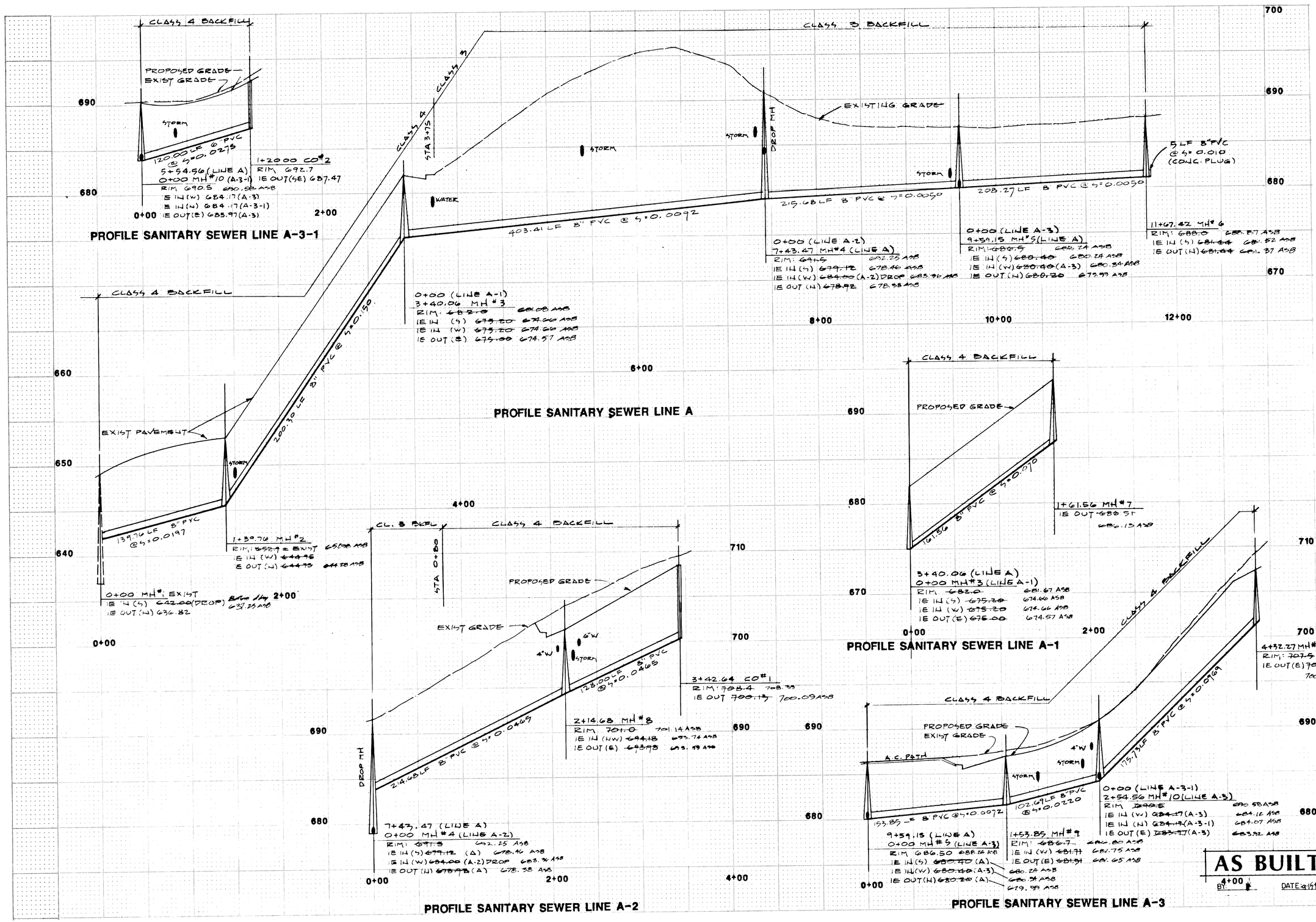

DRF DESIGNED	2/87 DATE
DRF DRAWN	2/87 DATE
GOE/KW CHECKED	DATE

REVISONS
9-15-87 Added Asbuilts

Kenneth A. Nelson

SANITARY SEWER PROFILES

HAVERHILL
DUNCAN PROPERTIES INC.
2700 N.W. 185TH. # 2082
PORTLAND, OREGON 97229

otak
otak inc. consulting engineers and surveyors
otak planners engineers surveyors

7 / 9
SHEET NO.

1437
PROJECT NO.

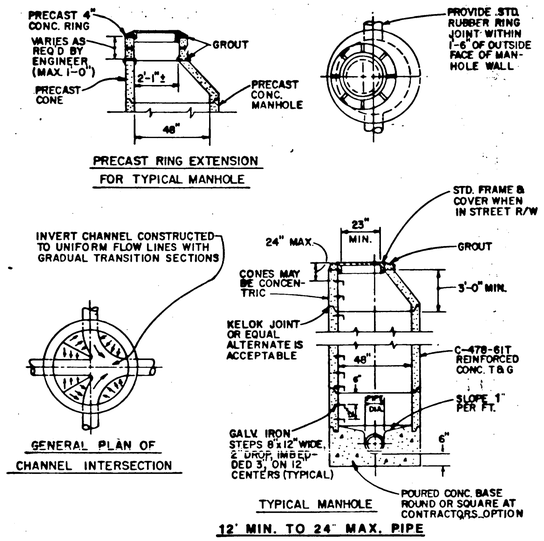

NOTES:
1. ALL PRECAST SECTIONS SHALL CONFORM TO THE REQUIREMENTS OF A.S.T.M.-C-478. ALL POURED IN PLACE CONCRETE SHALL HAVE A 28 DAY STRENGTH OF 3,000 P.S.I. AND 2" TO 4" SLUMP.
2. MATERIAL: 3/4" DIA. STRUCTURAL STEEL CONFORMING TO A.S.T.M. A-36 AND GALVANIZED IN CONFORMANCE TO A.S.T.M. A-123, FOR STEPS.

MANHOLE DETAIL

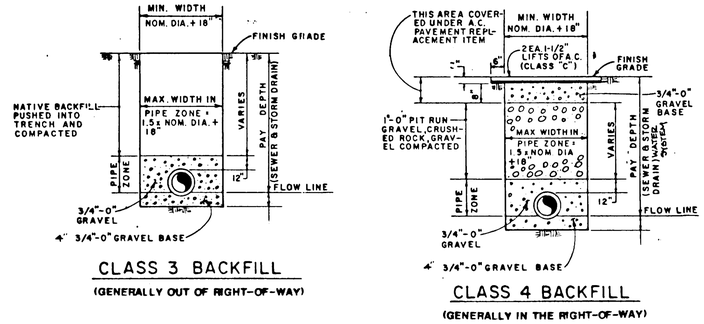

TRENCHING DETAIL

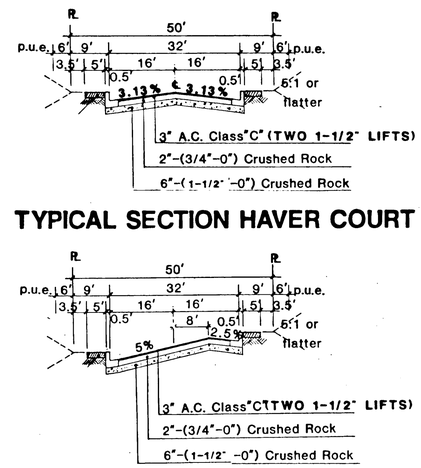

TYPICAL SECTION HAVER WAY

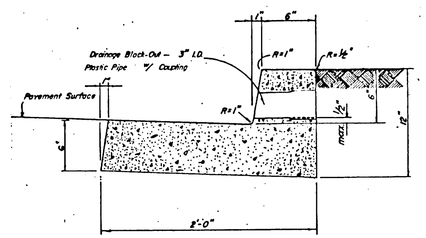

NOTES
Concrete to have breaking strength of 3000 p.s.i. after 28 days.

Transverse contraction joints:
1) Spacing to be not more than 10'

Drainage blockouts or weep holes:
1) Drainage access through existing curbs shall be drilled or sawcut with a minimum top width of 8" to satisfactory patching of curb (see standard plan no. 4.0.02
2) Drainage blockouts shall not be provided unless needed.

STANDARD MONOLITHIC CURB & GUTTER

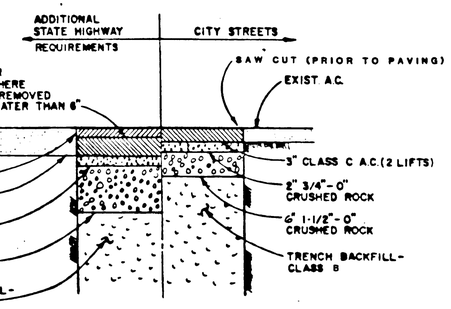

TRENCH RESURFACING DETAIL

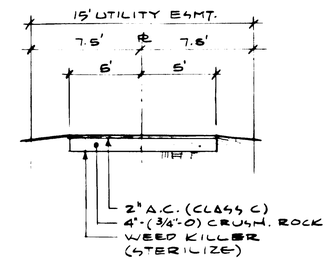

PEDESTRIAN PATHWAY

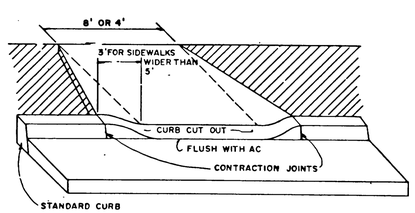

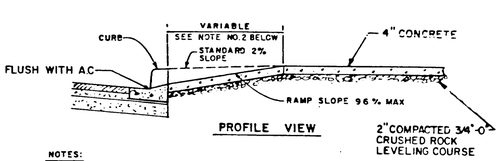

NOTES:
1. ALL RAMPS TO BE 4" THICK CONCRETE AND SHALL MEET A 3,000 P.S.I. COMPRESSION STRENGTH IN 28 DAYS.
2. RAMP LENGTH: IS TO MATCH BACK OF WALK FOR 5' WALKS AND 6 1/2' LONG FOR ALL OTHER WALK WIDTHS
3 WHEELCHAIR RAMPS SHALL HAVE A HEAVY BROOM FINISH BRUSHED PERPENDICULAR TO THE STREET

WHEELCHAIR RAMP DETAIL

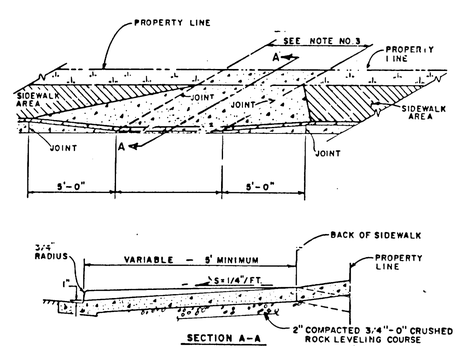

NOTES:
1. DRIVEWAY TO BE CONSTRUCTED OF 3,000 P.S.I. 2" TO 4" SLUMP CONCRETE 6" THICK WITH BROOM FINISH.
2. TO BE USED WITH CURB LINE SIDEWALKS AND WHERE DISTANCE FROM BACK OF CURB TO SIDEWALK IS 4' OR LESS

TYPICAL DRIVEWAY APPROACH

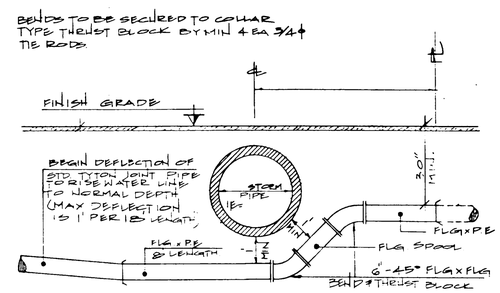

WATER AND STORM SEWER CROSSING

AS BUILT
BY: MK DATE: 9-15-87

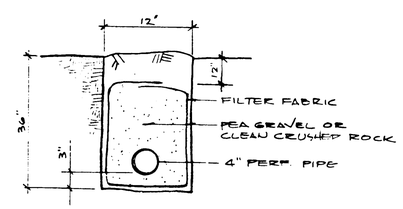

4" PERFORATED PIPE DETAIL

FRENCH DRAIN DETAIL

DRF	2/87
DESIGNED	DATE
DRF	2/87
DRAWN	DATE
CHECKED	DATE

REVISIONS

DETAILS

HAVERHILL
DUNCAN PROPERTIES INC.
2700 N.W. 185TH. # 2082
PORTLAND, OREGON 97229

otak

8 / 9
SHEET NO.

1437
PROJECT NO.

NOTES:

1. CONCRETE THRUST BLOCKING TO BE POURED AGAINST UNDISTURBED EARTH.
2. KEEP CONCRETE CLEAR OF JOINT AND ACCESSORIES.
3. IF NOT SHOWN ON PLANS, REQUIRED BEARING AREAS AT FITTING SHALL BE AS INDICATED BELOW, ADJUSTED IF NECESSARY, TO CONFORM TO THE TEST PROCEDURE (S) AND ALLOWABLE SOIL BEARING STRESS (ES) STATED THE SPECIAL SPECIFICATIONS.
4. BEARING AREAS AND SPECIAL BLOCKING DETAILS SHOWN ON PLANS TAKE PRECEDENCE OVER BEARING AREAS AND BLOCKING DETAILS SHOWN ON THIS STANDARD DETAIL.
5. BUILDING PAPER OR VISQUINE SHALL BE PLACED BETWEEN CONCRETE AND FITTINGS.
6. ALL POURED IN PLACE CONCRETE SHALL HAVE A (28) DAY STRENGTH OF 3,000 P.S.I. AND 2" TO 4" SLUMP.
7. BELOW BEARING AREAS BASED ON TEST PRESSURE OF 150 P.S.I. AND AN ALLOWABLE SOIL BEARING STRESS OF 2,000 POUNDS PER SQUARE FOOT. TO COMPUTE BEARING AREAS FOR DIFFERENT TEST PRESSURES AND SOIL BEARING STRESSES, USE THE FOLLOWING EQUATION: BEARING AREA = (TEST PRESSURE/150) X (2,000/SOIL BEARING STRESS) X (TABLE VALUE). BEARING AREAS IN SQUARE FEET.

FITTING SIZE (IN.)	TEE, WYE, PLUG OR CAP	90° BEND PLUGGED CROSS	TEE PLUGGED ON RUN A_1	TEE PLUGGED ON RUN A_2	45° BEND	22 1/2° BEND	11 1/4° BEND
4	1.0	1.4	1.9	1.4	1.0	—	—
6	2.0	3.0	4.3	3.0	1.6	1.0	—
8	3.8	5.3	7.6	5.4	2.9	1.5	1.0
10	5.9	8.4	11.8	8.4	4.6	2.4	1.2
12	8.5	12.0	17.0	12.0	6.6	3.4	1.7
14	11.5	16.3	23.0	16.3	8.9	4.6	2.3
16	15.0	21.3	30.0	21.3	11.6	6.0	3.0
18	19.0	27.0	38.0	27.0	14.6	7.6	3.8
20	23.5	33.3	47.0	33.3	18.1	9.4	4.7
24	34.0	48.0	68.0	48.0	26.2	13.6	6.8

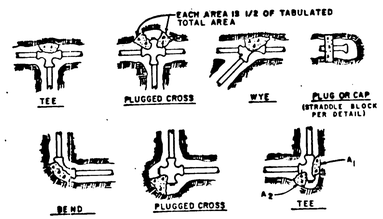

WATER LINE DETAILS & NOTES

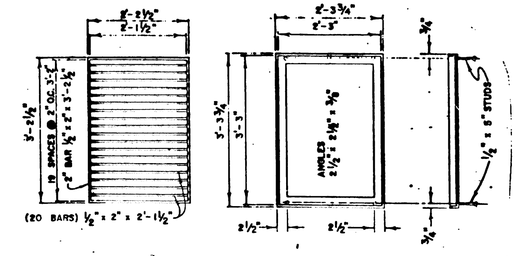

FRAME AND GRATE

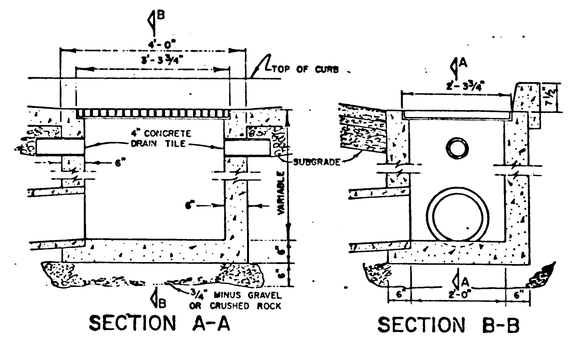

OVERSIZED CATCH BASIN DETAIL

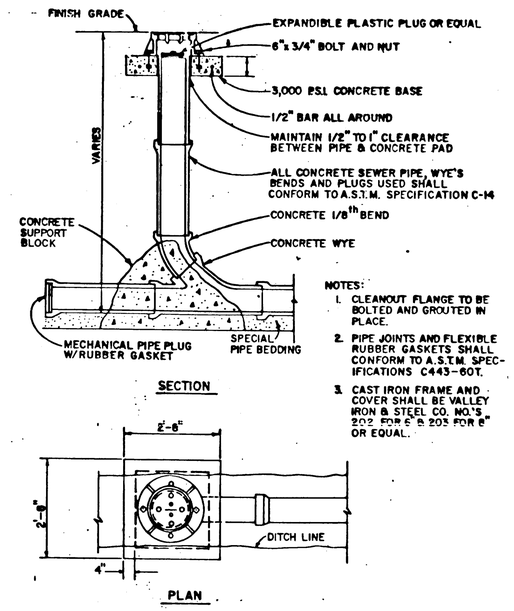

NOTES:

1. CLEANOUT FLANGE TO BE BOLTED AND GROUTED IN PLACE.
2. PIPE JOINTS AND FLEXIBLE RUBBER GASKETS SHALL CONFORM TO A.S.T.M. SPECIFICATIONS C443-60T.
3. CAST IRON FRAME AND COVER SHALL BE VALLEY IRON & STEEL CO. NO.'S 202 FOR 6" & 203 FOR 8" OR EQUAL.

SANITARY SEWER CLEANOUT

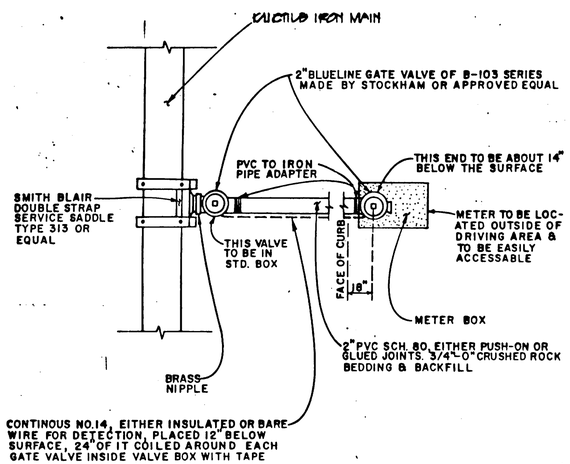

NOTES:

1. ON NEW MAINLINE INSTALLATION CONTRACTOR SHALL INSTALL ALL SERVICE LINE SADDLES PRIOR TO TESTING MAINLINE.

TYPICAL 2" PVC WATER SERVICE

NOTE: METER LOCATIONS ARE TO BE BEHIND SIDEWALK WHERE SIDEWALK NEXT TO CURB.

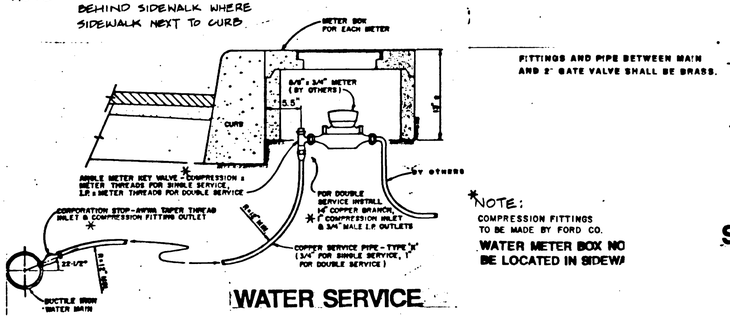

*NOTE: COMPRESSION FITTINGS TO BE MADE BY FORD CO.

WATER METER BOX NO BE LOCATED IN SIDEWA

WATER SERVICE

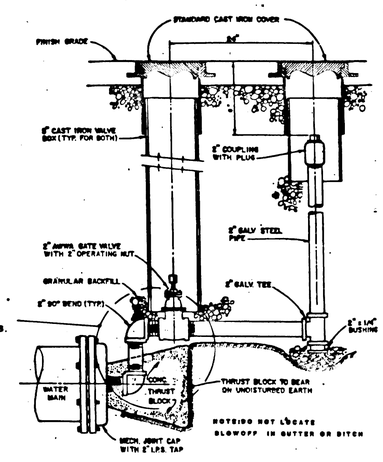

STANDARD BLOWOFF ASSEMBLY

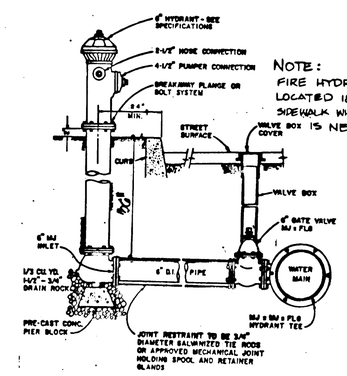

NOTE: FIRE HYDRANT TO BE LOCATED 18' BEHIND SIDEWALK WHERE SIDEWALK IS NEXT TO CURB.

FIRE HYDRANT ASSEMBLY

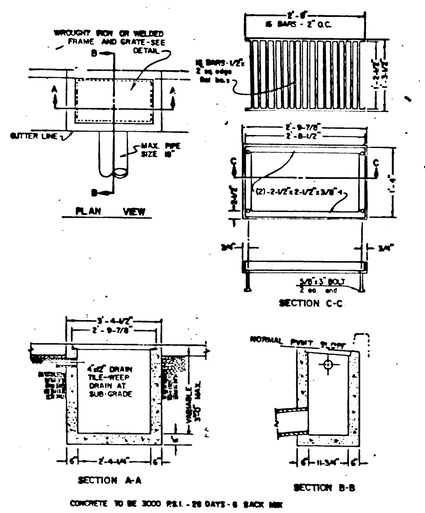

STANDARD CATCH BASIN

AS BUILT

BY: MK DATE: 9-15-87

DRF	DESIGNED	2/87 DATE
DRF	DRAWN	2/87 DATE
	CHECKED	DATE

REVISIONS

REGISTERED PROFESSIONAL ENGINEER — KENNETH A. WILSON

DETAILS

HAVERHILL
DUNCAN PROPERTIES INC.
2700 N.W. 185TH, # 2082
PORTLAND, OREGON 97229

otak

9 / 9
SHEET NO.

1437
PROJECT NO.