AS BUILTS

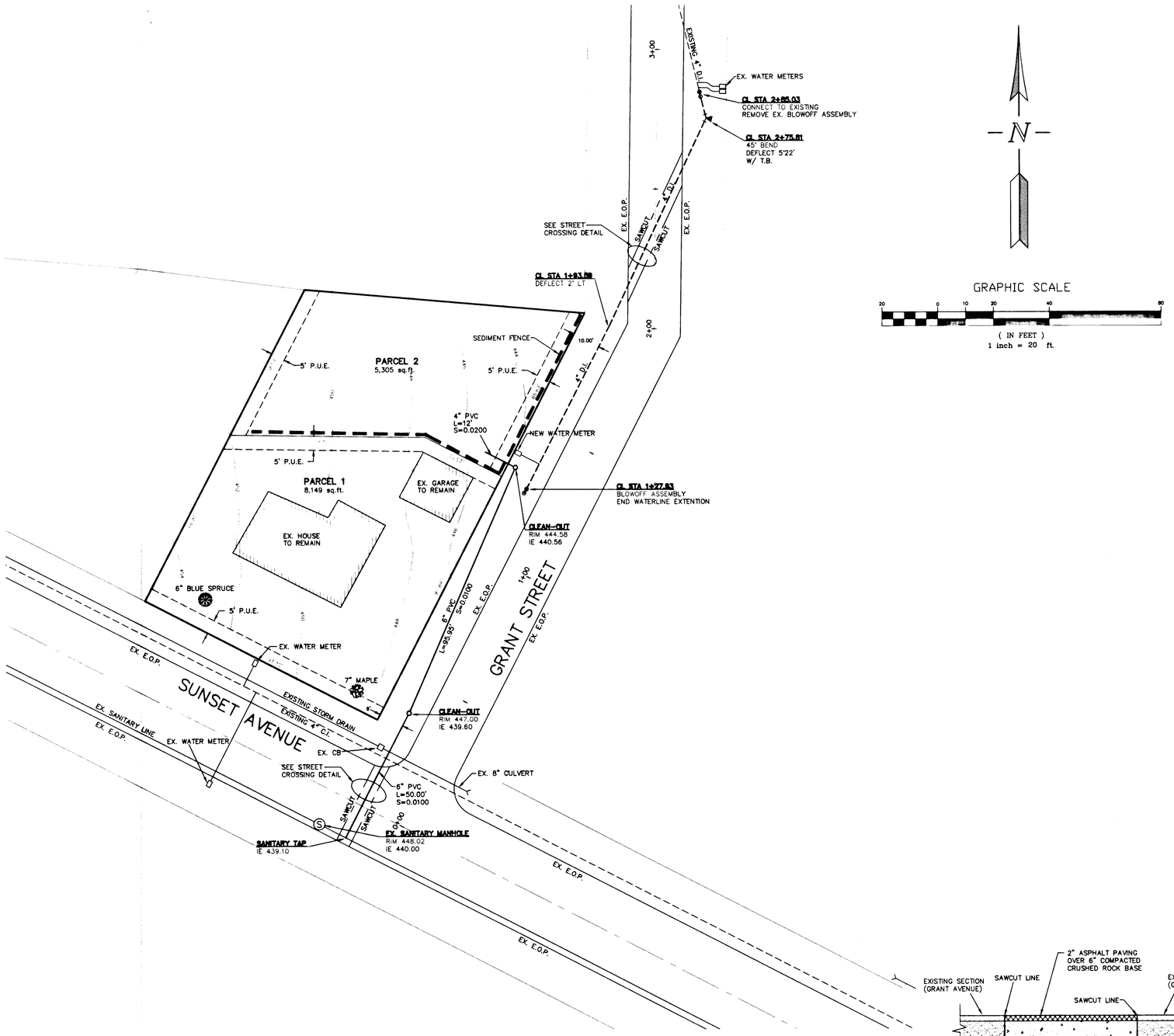

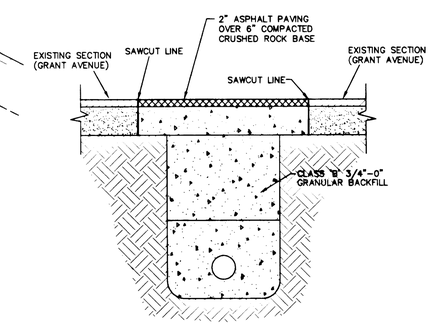

GRANT AVENUE CROSSING SECTION

N.T.S.

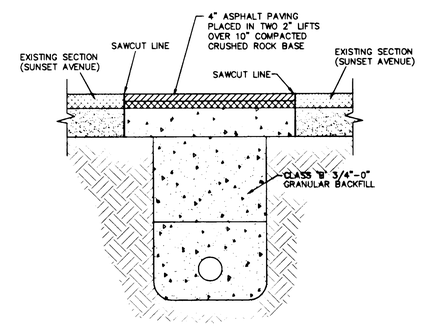

SUNSET AVENUE CROSSING SECTION

N.T.S.

REGISTERED PROFESSIONAL ENGINEER
12,821
OREGON
FEB. 14, 1989
THOMAS J. SISUL
10-8-99

REVISIONS	BY
REVISED PER CITY REDLINES (3/8/99)	MM
REVISED SAN. & WATER (7/15/99)	MM
AS BUILT (9/4/99)	MM

PARTITION ON GRANT & SUNSET

PACIFIC CREST HOMES

Waterline Extention and Sanitary Sewer Plan

SISUL ENGINEERING
375 PORTLAND AVENUE
GLADSTONE, OREGON 97027
(503) 657-0188

DRAWING: 98 Sheet1.DWG

DATE	JAN. 1999
SCALE	1"=20'
DRAWN	MM
JOB	98-86
SHEET	1
OF	2 SHEETS

REVISIONS	BY
REVISED PER CITY REDLINES (3/8/99)	MM

PARTITION ON GRANT & SUNSET

PACIFIC CREST HOMES

Details

TECHNICAL GUIDANCE HANDBOOK

Sediment Fence

Detail Drawing 3-2

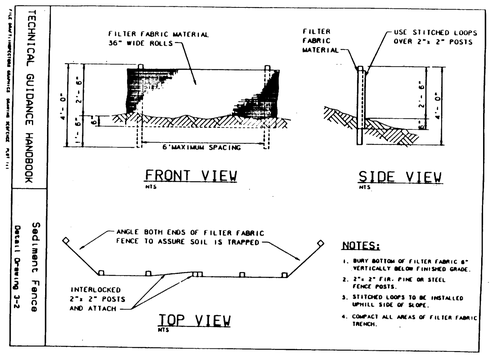

NOTES:

1. BURY BOTTOM OF FILTER FABRIC 6" VERTICALLY BELOW FINISHED GRADE.
2. 2"x 2" FIR, PINE OR STEEL FENCE POSTS.
3. STITCHED LOOPS TO BE INSTALLED UPHILL SIDE OF SLOPE.
4. COMPACT ALL AREAS OF FILTER FABRIC TRENCH.

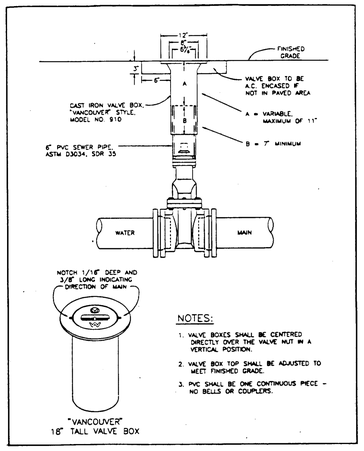

NOTES:

1. VALVE BOXES SHALL BE CENTERED DIRECTLY OVER THE VALVE NUT IN A VERTICAL POSITION.
2. VALVE BOX TOP SHALL BE ADJUSTED TO MEET FINISHED GRADE.
3. PVC SHALL BE ONE CONTINUOUS PIECE - NO BELLS OR COUPLERS.

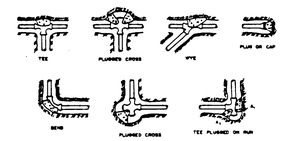

BEARING AREA OF THRUST BLOCK (in sq. ft.)

FITTING SIZE (IN.)	TEE, WYE, PLUG or CAP	90° BEND, PLUGGED DROP	TEE PLUGGED ON RUN	45° BEND	22½° BEND	11¼° BEND
			E	W		
4	1.5	1.4	1.1	1.5	1.0	-
6	3.1	3.0	1.5	3.2	2.1	0.9
8	5.5	5.3	1.9	5.7	3.8	1.6
10	8.6	8.3	2.3	8.9	5.9	2.5
12	12.4	12.0	2.6	12.8	8.5	3.6
14	16.9	16.3	2.9	17.4	11.6	4.9
16	22.1	21.3	3.3	22.7	15.1	6.4
18	28.0	27.0	3.6	28.7	19.1	8.1
20	34.6	33.3	3.9	35.5	23.6	10.0
24	49.8	48.0	4.6	51.1	34.0	14.4

NOTES:

1. Bearing shall be against undisturbed earth.
2. Bearing area shall be that area of earth and assumed.
3. The required thrust bearing area for special connections or areas omitted on the plans. For example, ⊕ indicates 18 sq. ft. bearing area required.
4. If soil cannot withstand required bearing area, fitting cannot be so anchored alone, adjacent if necessary to conform to the best practicable and economic soil bearing strength thereof in the opinion of the engineer.
5. Bearing areas and special bearing details shown on the plans shall take precedence over the standard bearing areas.
6. Bearing areas are based on a test pressure of 150 P.S.I. and an allowable soil bearing stress of 2000 LBS./SQ. FT. To compute bearing areas for different test pressures and soil bearing strengths, use the following equation:

BEARING AREA = TABLE VALUE × $\frac{\text{TEST PRESSURE}}{150}$ × $\frac{2000}{\text{SOIL BEARING STRESS}}$

CITY OF WEST LINN	THRUST BLOCKING
DRAWN BY DDF DATE 5-26-87	
CHECKED BY — DATE —	
APPROVED BY Earl Reed DATE 5-27-87	DWG. NO. TB - 302

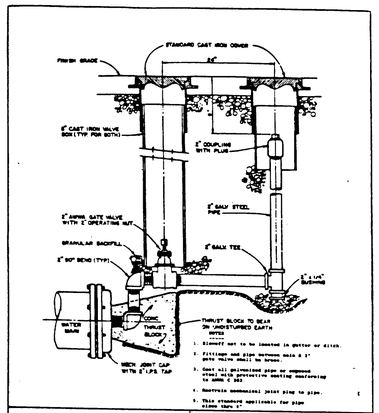

CITY OF WEST LINN	BLOWOFF
DRAWN BY DDF DATE 5-26-87	
CHECKED BY — DATE —	
APPROVED BY Earl Reed DATE 5-27-87	DWG. NO. BO - 301

173

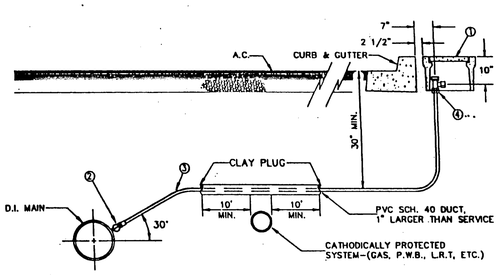

MATERIALS:

1. BROOKS METER BOX, BODY NO. 37, LID AND COVER NO. 37-S.
2. MUELLER CORP. STOP NO. H-15008 OR FORD F10001-4G. SET CORP. STOP WITH OPERATING NUT AT 3 OR 9 O'CLOCK.
3. 1" SOFT TEMPER, TYPE 'K' COPPER TUBING COMPLYING WITH ASTM B-88.
4. MUELLER ANGLE METER STOP NO. H-1425B (FORD NO. KV43-444W-G).

NOTES:

1. SUBSTITUTES FOR ANY MATERIALS SHOWN SHALL BE APPROVED BY THE CITY ENGINEER.
2. ALL PIPE AND STRUCTURE ZONES SHALL BE BACKFILLED USING 3/4" MINUS CRUSHED AGG. AND COMPACTED TO 95% MAX. DENS. AS DETERMINED BY AASHTO T-180.
3. WHEN AN ACTIVE CATHODIC PROTECTED SYSTEM IS ENCOUNTERED, SCH. 40 PVC SHALL BE INSTALLED AS SHOWN ABOVE WITH CLAY PLUG.
4. METER BOX SHALL BE CENTERED OVER THE COMPLETED METER ASSEMBLY.
5. FOR VACANT RESIDENTIAL LOTS, LOCATE SINGLE SERVICE 18" INSIDE SIDE LOT LINE.
6. TAPS INTO MAIN LINE TO BE AT 18" CL SPACING MIN.
7. ANGLE METER STOPS TO BE 18" FROM PROPERTY LINE AND NOT IN DRIVEWAY APPROACH.

TYPICAL 1" WATER SERVICE

N.T.S.

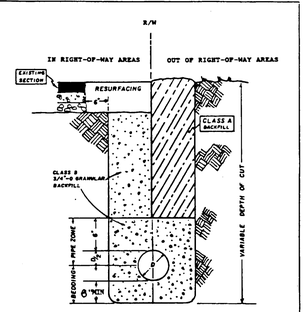

CITY OF WEST LINN	PIPE BEDDING AND BACKFILL DETAILS
DRAWN BY DDF DATE 8-20-87	
CHECKED BY DLL DATE 5-27-87	
APPROVED BY Earl Reed DATE 5-27-87	DWG. NO. PB - 280

169

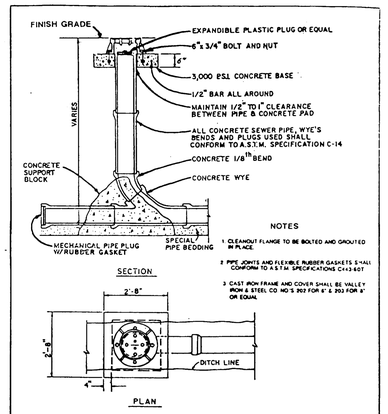

NOTES

1. CLEANOUT FLANGE TO BE BOLTED AND GROUTED IN PLACE.
2. PIPE JOINTS AND FLEXIBLE RUBBER GASKETS SHALL CONFORM TO A.S.T.M. SPECIFICATIONS C-443-64T.
3. CAST IRON FRAME AND COVER SHALL BE VALLEY IRON & STEEL CO. NO'S 202 FOR 6" & 203 FOR 8" OR EQUAL.

CITY OF WEST LINN	SANITARY SEWER CLEANOUT
DRAWN BY DDF DATE 11-17-88	
CHECKED BY DLL DATE 11-5-88	
APPROVED BY Earl Reed DATE 10-12-88	DWG. NO. SS-4

AS-BUILT

REGISTERED PROFESSIONAL ENGINEER 12820 OREGON JULY 14, 1989 THOMAS J. SISUL

10-8-99

SISUL ENGINEERING
375 PORTLAND AVENUE
GLADSTONE, OREGON 97027
(503) 657-0188

DATE	JAN. 1999
SCALE	1"=20'
DRAWN	MM
JOB	98-86
SHEET	2
OF	2 SHEETS