FIELD'S PARK

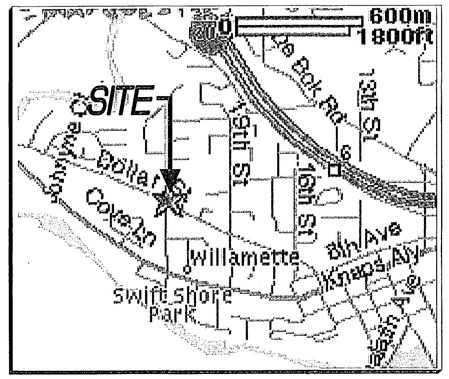

VICINITY MAP

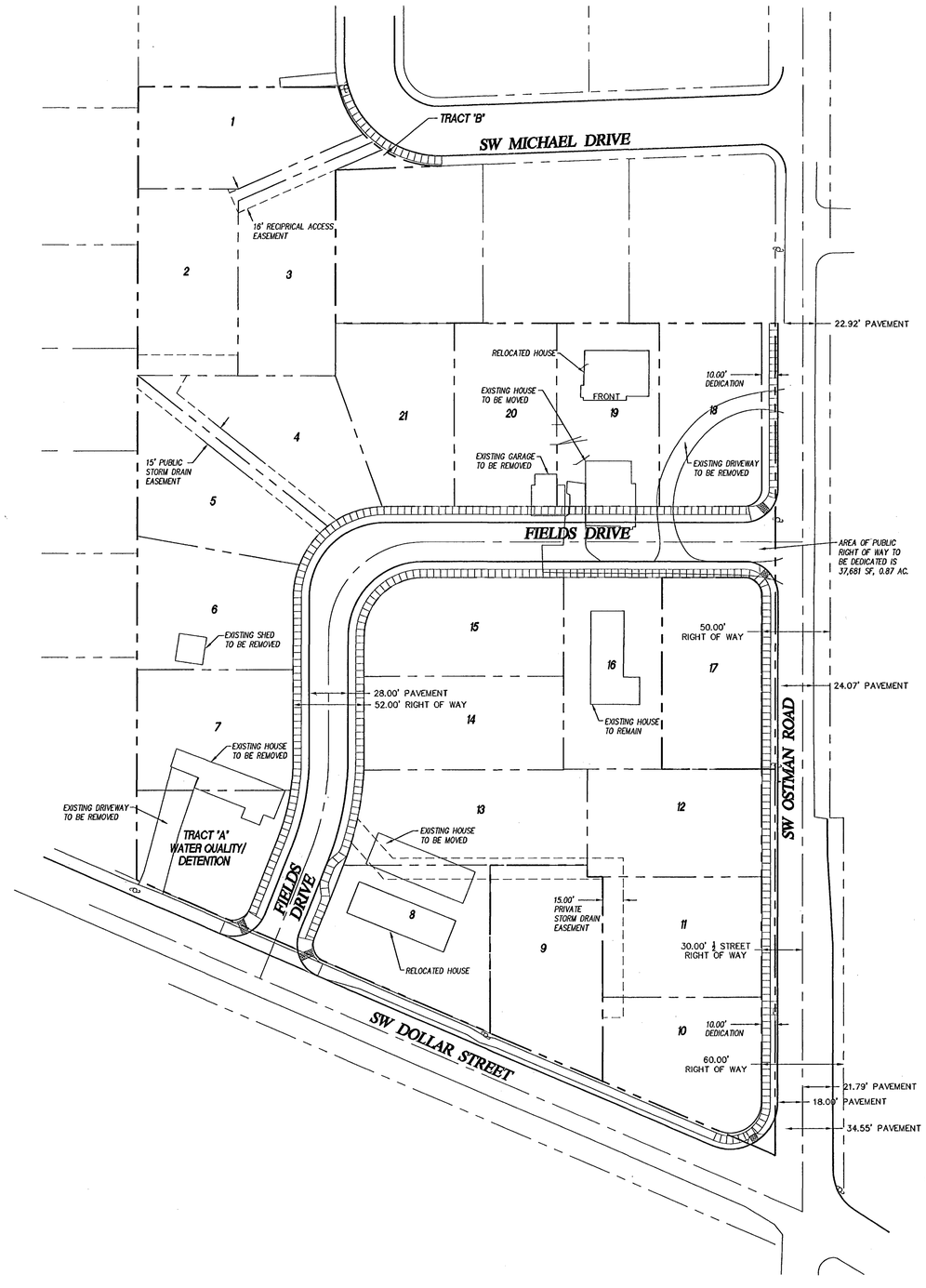

LEGEND

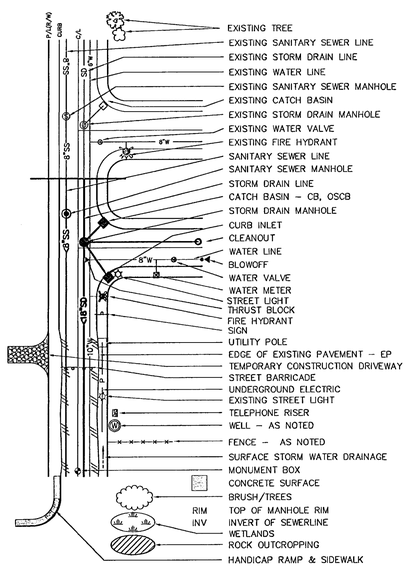

ABBREVIATIONS

AC	ASPHALT CONCRETE	PC	POINT OF CURVATURE
ACP	ASBESTOS CEMENT PIPE	PCC	POINT OF COMPOUND CURVATURE
AB	AGGREGATE BASE	PI	POINT OF INTERSECTION
BCR	BEGIN CURB RETURN	ℙ	PROPERTY LINE
BM	BENCH MARK	PRC	POINT OF REVERSE CURVATURE
BVC	BEGIN VERTICAL CURVE	PT	POINT OF TANGENCY
CIP	CAST IRON PIPE	PVC	POLY-VINYL CHLORIDE
CJ	CONTROL JOINT	R	RADIUS
CL	CLASS	RCP	REINFORCED CONCRETE PIPE
℄	CENTERLINE	R/W	RIGHT-OF-WAY
CMP	CORRUGATED METAL PIPE	S	SEWER
CMU	CONCRETE MASONARY UNIT	SD	STORM DRAIN
CO	CLEANOUT	SL	SEWER LATERAL
CTV	CABLE TELEVISION	STA	STATION
DI	DROP INLET	STD. DTL.	STANDARD DETAIL
DIP	DUCTILE IRON PIPE	T	TELEPHONE
E	ELECTRICAL	TB	THRUST BLOCK
ECR	END CURB RETURN	TC	TOP OF CURB
EJ	EXPANSION JOINT	TCN	TOP OF CONCRETE
EL	ELEVATION	TD	TOP OF DIKE
EVC	END VERTICAL CURVE	TF	TOP OF FOOTING
EX	EXISTING	TG	TOP OF GRATE
FF	FINISH FLOOR	TI	TRAFFIC INDEX
FG	FINISH GRADE	TL	TRAFFIC LIGHT
FH	FIRE HYDRANT	TP	TOP OF PAVEMENT
FL	FLOWLINE	TYP.	TYPICAL
FLG	FLANGE	TW	TOP OF WALL
G	GAS	VCP	VITRIFIED CLAY PIPE
GM	GAS METER	VPI	VERTICAL POINT OF INTERSECTION
GB	GRADE BREAK	W	WATER
GSP	GALVANIZED STEEL PIPE	WM	WATER METER
HP	HIGH POINT	WV	WATER VALVE
L	CURVE LENGTH	Δ	DELTA (CURVE CENTRAL ANGLE)
LF	LINEAL FEET	±	APPROXIMATELY
MH	MANHOLE	%	PERCENT
MJ	MECHANICAL JOINT	<	LESS THAN
N.I.C.	NOT INCLUDED IN CONTRACT	>	GREATER THAN
OCEW	ON CENTER EACH WAY		

NOTES

SITE AREA:	6.04 AC
ZONING:	R-10
TAX MAP:	T2 R1E SEC 34DC
TAX LOTS:	100, 200, 300, 400 & 500
NUMBER OF LOTS:	21

UTILITIES & SERVICES

WATER:	CITY OF WEST LINN
STORM:	CITY OF WEST LINN
SEWER:	CITY OF WEST LINN
POWER:	PGE
GAS:	NORTHWEST NATURAL
FIRE:	TVF&R
POLICE:	CITY OF WEST LINN
SCHOOL:	CITY OF WEST LINN
ROADS:	CITY OF WEST LINN
PARKS:	CITY OF WEST LINN

BENCH MARK

CITY OF WEST LINN BENCHMARK AT 16TH AND WILLAMETTE DRIVE ELEVATION = 216.17'

NOTICE TO EXCAVATORS:
ATTENTION: OREGON LAW REQUIRES YOU TO FOLLOW RULES ADOPTED BY THE OREGON UTILITY NOTIFICATION CENTER. THOSE RULES ARE SET FORTH IN OAR 952-001-0010 THROUGH OAR 952-001-0090. YOU MAY OBTAIN COPIES OF THE RULES BY CALLING THE CENTER.
(NOTE: THE TELEPHONE NUMBER FOR THE OREGON UTILITY NOTIFICATION CENTER IS (503)-232-1987).

POTENTIAL UNDERGROUND FACILITY OWNERS

Dig Safely.
Call the Oregon One-Call Center
1-800-332-2344

EMERGENCY TELEPHONE NUMBERS

NW NATURAL GAS	
M-F 7am-6pm	503-226-4211 Ext.4313
AFTER HOURS	503-226-4211
PGE	503-464-7777
QWEST	1-800-573-1311
CITY OF WEST LINN	503-722-5501
CITY OPERATIONS	503-656-6081
VERIZON	1-800-483-1000

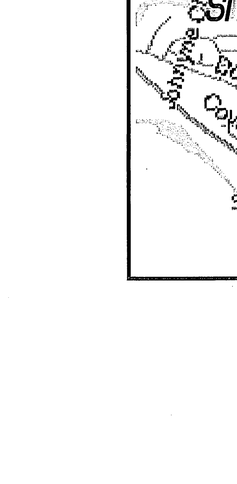

GRAPHIC SCALE

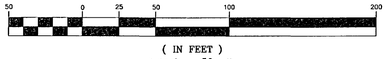

(IN FEET)
1 inch = 50 ft.

AS-BUILT
DATE 5/31/05 SRH

SHEET INDEX

1	TITLE SHEET
2	CONSTRUCTION NOTES
3	GRADING AND EROSION CONTROL PLAN
4	STREET AND STORM PLAN
5	STREET AND STORM PROFILES
6	SANITARY AND WATER PLAN
7	SANITARY PROFILES
8-11	DETAIL SHEET
12	OFF-SITE STORM DRAIN IMPROVEMENTS
L1	STORMWATER POND PLANTING PLAN

SFA Design Group, LLC
STRUCTURAL | CIVIL | LAND USE PLANNING
9020 SW Washington Square Dr. Suite 350
Portland, Oregon 97223
p: (503) 641-8311 f: (503) 643-7905
sfadesigngroup.com

TITLE SHEET
FIELD'S PARK

REGISTERED PROFESSIONAL ENGINEER
OREGON
JAN. 12, 2005
BRENT E. FILI
VALID THROUGH 12-31-05

NO.	DATE	REVISION	BY
1	5/31/05	AS-BUILT	SRH

DESIGNED BY SRH DATE 12/06/04
DRAWN BY SRH DATE 12/06/04
REVIEWED BY BEF DATE 12/06/04
PROJECT NO. 105-001 REF.
SCALE HORZ: 1"=50' VERT: N/A
105TITL.DWG

SHEET 1 OF 12

PROJECT FIELDS
NO. 105-001
TYPE CONSTRUCTION

GENERAL NOTES:

1. ALL CONSTRUCTION SHALL BE IN STRICT ACCORDANCE WITH THE CITY OF WEST LINN CONSTRUCTION STANDARDS.
2. THE DESIGN ENGINEER WILL BE RESPONSIBLE FOR INSPECTION OF THE PROPOSED IMPROVEMENTS WITH OVERSIGHT FROM CITY'S PUBLIC WORKS AND ENGINEERING STAFF.
3. A WORK SCHEDULE WILL BE REQUIRED FROM THE CONTRACTOR SO THAT THE ENGINEER CAN HAVE AN INSPECTOR ONSITE AT THE APPROPRIATE TIMES. IF THE WORK SCHEDULE IS REVISED THE CONTRACTOR IS TO NOTIFY THE ENGINEER OF THE CHANGES. ADDITIONALLY THE CONTRACTOR IS TO GIVE THE ENGINEER AT LEAST 24 HOURS NOTICE OF ANY TESTING REQUIRING THE PRESENCE OF THE ENGINEER AND/OR CITY STAFF.
4. THE CONTRACTOR IS TO RECEIVE THE APPROVAL OF THE ENGINEER OF ANY PROPOSED CHANGES TO THE PLANS OR STANDARD REQUIREMENTS.
5. A BUILDING DEPARTMENT PLUMBING PERMIT IS REQUIRED FOR UTILITIES BEYOND THE FIRST CLEANOUT OR METER ON PRIVATE PROPERTY.
6. A PRE-CONSTRUCTION MEETING WITH THE CITY OF WEST LINN IS REQUIRED PRIOR TO BEGINNING CONSTRUCTION. PRIOR TO SITE CLEARING, CONSTRUCTION "SNOW" FENCING SHALL BE PLACED AROUND TREES TO BE PRESERVED 10 FEET BEYOND THE DRIPLINE OF THE TREES AND SHALL REMAIN IN PLACE THROUGHOUT THE INFRASTRUCTURE IMPROVEMENTS.
7. ALL PUBLIC IMPROVEMENTS SHALL BE IN PLACE AND ACCEPTED PRIOR BY THE CITY PRIOR TO ANY FINAL PLAT RECORDING AND ISSUANCE OF BUILDING PERMITS.
8. ALL PEDESTRIAN RAMPS SHALL MEET ADA REQUIRMENTS.

UTILITIES:

1. IF NOT NOTED ON THE PLANS UTILITY INFORMATION AND CROSSING LOCATIONS WILL HAVE TO BE OBTAINED FROM THE UTILITIES.
2. UTILITY CONTACTS ARE AS FOLLOWS: PGE – CINDY MANSELLE, 650–1411; COMCAST – JAMIE STENCIL, 243–7497, U.S. WEST COMMUNICATIONS – JACKIE LOLLAR 242–8496.

WATER SUPPLY:

1. WATER MAINS SHALL BE DUCTILE IRON PIPE CONFORMING TO AWWA C151 CLASS 52. PIPE IS TO HAVE CEMENT MORTAR LINING AND BITUMINOUS SEAL COAT CONFORMING TO AWWA C104. JOINTS ARE TO BE PUSH–ON JOINT. PIPE FITTINGS ARE TO BE OF THE SAME MATERIAL AND CLASS AS PIPE AND OF DOMESTIC ORIGIN.
2. WATER MAINS TO HAVE A MINIMUM COVER OF 36".
3. THRUST BLOCKS ARE TO BE PROVIDED AT ALL CHANGES IN DIRECTION AND BRANCHES. THRUST BLOCKING CONCRETE STRENGTH IS TO BE 3000 PSI MIN. SEE DETAILS FOR THRUST BLOCK SIZING. POUR THRUST BLOCKS AGAINST UNDISTURBED EARTH. ALL THRUSTS BLOCKS SHALL BE INSPECTED BY THE CITY PRIOR TO POURING AND PRIOR TO BACKFILLING.
4. GATE VALVES SHALL BE A DOUBLE DISC TYPE CONFORMING TO AWWA C500. BUTTERFLY VALVES SHALL BE CLASS 150 B SHORT BODY TYPE IN CONFORMANCE WITH AWWA C504. VALVE BOXES SHALL BE RICH MODEL 925 OR EQUAL.
5. FIRE HYDRANTS SHALL CONFORM TO AND SHALL BE INSTALLED IN ACCORDANCE WITH APWA DIVISION IV, SECTION 404. PUMPER OUTLET IS TO FACE THE DIRECTION OF ACCESS.
6. GRANULAR BACKFILL IS TO BE COMPACTED TO 95% MAXIMUM DRY DENSITY PER AASHTO T–180 TEST METHOD AND NATIVE MATERIAL SHALL BE COMPACTED TO 85% OF IN–PLACE DRY DENSITY OF SURROUNDING SOIL. BACKFILL UNDER STREETS SHALL BE IN ACCORDANCE WITH CLASS 'B' BACKFILL AS INDICATED ON THE DETAIL SHEET OF THE PLANS. EXCAVATION, BEDDING AND BACKFILL SHALL BE IN ACCORDANCE WITH APWA DIVISION IV, SECTION 401.
7. SERVICE LATERALS SHALL BE TYPE K. LATERAL SIZES SHALL BE 1". FOR DOUBLE SERVICES TWO 1" WATER SERVICE SHALL BE LAID SIDE BY SIDE. CORPORATION STOPS SHALL BE FORD OR APPROVED EQUAL. CURB STOP SHALL BE 1" FORD METER STOP. METER BOXES SHALL BE EQUAL TO BROOKS #31. METER BOXES ARE TO BE INSTALLED 3/4" ABOVE FINISH GRADE. REFER TO STANDARD DETAIL WL–402.
8. ALL WATERLINES WILL BE PRESSURE TESTED AND PURIFICATION TESTED BEFORE CONNECTION TO THE CITY WATER SYSTEM. PRESSURE TEST SHALL BE CONDUCTED AT 180 PSI FOR ONE HOUR WITH NO LOSS AND SHALL MEET THE REQUIREMENTS OF APWA, DIVISION IV, SECTION 402.3.04.
9. DISINFECTION SHALL CONFORM WITH APWA DIVISION 4, SECTION 402.3.05
10. DO NOT CONNECT NEW PIPE TO EXISTING PIPE PRIOR TO TESTING. THE CITY OF WEST LINN REQUIRES ACCEPTANCE OF NEW WATERLINE PRIOR TO CONNECTION TO EXISTING WATER SYSTEM.
11. A PLUMBING PERMIT FROM THE CITY OF WEST LINN BUILDING DEPARTMENT IS REQUIRED FOR SERVICE LATERAL INSTALLATIONS BEYOND THE WATER METER.
12. ALL MATERIALS, INSTALLATION, TESTS, AND CHLORINATION TO BE IN STRICT ACCORDANCE WITH APWA'S STANDARD SPECIFICATIONS FOR PUBLIC WORKS CONSTRUCTION, THE SUPPLEMENTAL STANDARDS AND CODES OF THE CITY OF WEST LINN, AND THE OREGON STATE HEALTH DIVISION ADMINISTRATIVE RULES, CHAPTER 333.

STREETS:

1. NEW STREET SECTIONS ARE TO BE CLEARED OF ALL SURFACE VEGETATION AND OTHER MISCELLANEOUS STRUCTURES OR MATERIALS. GRUB IMPROVEMENT AREAS TO REMOVE ALL BURIED VEGETATIVE MATTER AND DEBRIS TO A DEPTH OF 8" BELOW SUBGRADE. PROPERLY DISPOSE OF ALL WASTE MATERIAL.
2. STREET SUBGRADE SHALL CONFORM TO APWA DIVISION II, SECTION 206. AREAS TO RECEIVE FILL ARE TO BE INSPECTED BY CITY OF WEST LINN PERSONNEL PRIOR TO PLACEMENT OF THE FILL. THE CONTRACTOR SHALL HAVE FILL AREAS TESTED FOR COMPACTION BY A CERTIFIED TESTING LAB IN ACCORDANCE WITH APWA DIVISION II, SECTION 206.3.05. SUCH TESTING WILL BE AT THE CONTRACTOR'S EXPENSE.
3. AGGREGATE BASE ROCK SHALL CONFORM TO THE REQUIREMENTS OF APWA DIVISION II, SECTION 207. BASE COURSE SHALL BE (1 1/2"–0) CRUSHED ROCK AND LEVELING COURSE SHALL BE (3/4"–0). CITY OF WEST LINN REQUIRES A PROOF ROLL WITH A LOADED 10 YARD DUMP TRUCK OF THE SUBGRADE PRIOR PLACEMENT OF THE ROCK AND AGAIN AFTER PLACEMENT OF THE BASE ROCK AND PRIOR TO PAVING. ALL UNDERGROUND UTILITIES INCLUDING LATERALS, SERVICES AND POWER OR GAS CONDUITS WILL BE IN PLACE BEFORE SUBGRADE PROOF ROLL WILL TAKE PLACE.
4. ASPHALT CONCRETE SHALL CONFORM TO THE REQUIREMENTS OF APWA DIVISION II, SECTION 211. 2" BASE LIFT SHALL BE CLASS 'B' A.C. AND THE FINAL LIFT SHALL BE 1 1/2" OR 2" CLASS 'C' A.C. AS PER APWA DIVISION II, SECTION 211.2.01 AND AS SPECIFIED ON SHEET #4. THE TOP LIFT OF ASPHALT CONCRETE SHALL NOT BE PLACED PRIOR TO RECEIVING PERMISSION FROM THE CITY OF WEST LINN ENGINEERING DEPARTMENT.
5. CONSTRUCT CURB AND GUTTER USING CLASS 'A' 3300 PSI CONCRETE WITH MAXIMUM 1 1/2" AGGREGATE SIZE. CONTRACTION JOINTS AT 15' MAXIMUM ON CENTERS. THREE INCH WEEPHOLES ARE TO BE INSTALLED ON ALL LOTS UPHILL OR EVEN WITH THE STREET. GENERALLY WEEPHOLES SHALL BE LOCATED AT THE CENTER AND LOWEST EDGE OF CURB FOR EACH LOT. CURB DEPRESSIONS FOR HANDICAP RAMPS SHALL BE CENTERED BETWEEN CURB RETURNS AT INTERSECTIONS UNLESS OTHERWISE NOTED ON THE PLANS. CONTRACTOR SHALL STAMP LOCATION OF SEWER AND WATER CROSSINGS WITH AN (S) OR A (W).
6. ALL MATERIALS, INSTALLATION, TESTS, AND INSPECTIONS TO BE IN STRICT ACCORDANCE WITH APWA'S STANDARD SPECIFICATIONS FOR PUBLIC WORKS CONSTRUCTION AND THE SUPPLEMENTAL STANDARDS AND SPECIFICATIONS OF THE CITY OF WEST LINN STREET/UTILITY DESIGN AND COSNTRUCTION STANDARDS.
7. A STREET CONSTRUCTION ENCROACHMENT PERMIT OR SIMILAR PERMIT MAY BE REQUIRED FROM THE CITY OF WEST LINN. CONSTRUCTION PERMIT FEES OR OTHER SIMILAR FEES OR BONDING REQUIRED OF THE CONTRACTOR WILL BE THE CONTRACTOR'S RESPONSIBILITY TO OBTAIN.

SANITARY SEWER:

1. PIPE SHALL BE PVC SEWER PIPE CONFORMING TO ASTM D–3034–SDR 35. MINIMUM STIFFNESS SHALL BE 46 PSI AND JOINT TYPE SHALL BE ELASTOMERIC GASKET CONFORMING TO ASTM D–3212.
2. MANHOLE BASE SHALL BE POURED IN–PLACE CONCRETE BASE WITH A MINIMUM COMPRESSIVE STRENGTH OF 3000 PSI OR PRECAST. MANHOLE RISERS AND TOPS SHALL BE PRECAST SECTIONS WITH MINIMUM COMPRESSIVE STRENGTH OF 4000 PSI. TOPS SHALL BE ECCENTRIC CONES EXCEPT WHERE INSUFFICIENT HEADROOM REQUIRES FLAT TOPS. INVERTS SHALL BE CONSTRUCTED SO AS TO PROVIDE SMOOTH FLOW–THROUGH CHARACTERISTICS. PVC PIPE SHALL BE CONNECTED TO MANHOLE BY MEANS OF AN ELASTOMERIC GASKET, AN APPROVED WATERSTOP, OR FLEXIBLE SLEEVE. CEMENT GROUT FOR CONNECTING PVC SEWER PIPE TO MANHOLE WILL NOT BE PERMITTED.
3. ALL MANHOLES LOCATED IN EASEMENT AREAS REQUIRE TAMPER PROOF LIDS. ALL MANHOLE RIMS NOT IN PAVEMENT AREA TO BE SET 12 INCHES ABOVE PROPOSED GRADE.
4. CLEANOUT PIPE, FITTINGS, AND JOINTS SHALL BE THE SAME SPECIFICATIONS AS FOR PIPE. CASTINGS ARE AS SHOWN ON DETAIL AND SHALL CONFORM TO ASTM A48 (GRADE 30). CLEANOUT RISER SHALL MATCH DOWNSTREAM PIPE DIAMETER.
5. GRANULAR BACKFILL IS TO BE COMPACTED TO 95% MAXIMUM DRY DENSITY PER AASHTO T–180 TEST METHOD AND NATIVE MATERIAL SHALL BE COMPACTED TO 85% OF IN–PLACE DRY DENSITY OF SURROUNDING SOIL.
6. PVC SERVICE LATERALS SHALL BE 4" PIPE CONFORMING TO THE SAME SPECIFICATIONS AS THE SEWER MAINS. SERVICE LATERALS SHALL BE INSTALLED TO A POINT BEYOND THE LINE OF THE SEWER OR UTILITY EASEMENT AS SHOWN ON THE PLAN. THE SERVICE LATERAL SHALL BE PLUGGED WITH A 4" RUBBER RING PLUG, AND THE LOCATION OF THE LATERAL'S END MARKED WITH A 2" X 4" STAKE PAINTED GREEN AND MARKED WITH THE DEPTH OF THE LATERAL.
7. SANITARY SEWER PIPE AN APPURTENANCES SHALL BE TESTED FOR LEAKAGE IN ACCORDANCE WITH APWA DIVISION III REQUIREMENTS. LEAKAGE TESTS WILL INCLUDE REQUIRED APWA AIR PRESSURE TEST FOR SEWER LINES AND REQUIRED APWA VACUUM TEST OF MANHOLES. ALL PVC PIPE SHALL BE TESTED FOR DEFLECTION. DEFLECTION SHALL BE TESTED WITH A MANDREL EQUAL TO 95% OF THE PIPE SIZE BEING TESTED. IN ADDITION, SEWER LINES SHALL BE VIDEO INSPECTED BY THE CONTRACTOR PER APWA, DIVISION III, SECTION 303.3.11. ALL TESTS SHALL BE WITNESSED BY THE ENGINEER AND THE CITY OF WEST LINN.
8. A PLUMBING PERMIT FROM THE CITY OF WEST LINN BUILDING DEPARTMENT IS REQUIRED FOR SANITARY SEWER LATERALS BEYOND THE FIRST CLEANOUT.
9. ALL MATERIALS, INSTALLATION, TESTS, AND INSPECTIONS TO BE MADE IN STRICT ACCORDANCE WITH CITY OF WEST LINN'S STREET/UTILITY CONSTRUCTION STANDARDS, WITH APWA'S STANDARD SPECIFICATIONS FOR PUBLIC WORKS CONSTRUCTION, AND WITH THE UNIFORM PLUMBING CODE.

STORM DRAINS:

1. 10" AND LARGER STORM DRAIN PIPE SHALL BE CLASS 3, NON–REINFORCED, CONCRETE PIPE CONFORMING TO ASTM C14, PIPE CONFORMING TO ASTM D–3034 OR SEAMLESS PVC PIPE CONFORMING TO ASTM F794. (PW RIB). WHERE REQUIRED, JOINTS ARE REQUIRED FOR ALL CONCRETE PIPE. EIGHT INCH AND SMALLER STORM DRAIN PIPE SHALL CONFORM TO ASTM D 3034 PVC PIPE.
2. GUTTER INLETS SHALL BE POURED IN–PLACE CONCRETE WITH A MINIMUM COMPRESSIVE STRENGTH OF 3000 PSI. FRAME SHALL BE FABRICATED OF STRUCTURAL STEEL, ASTM A–7, A–36, A–273.
3. MANHOLE BASE MAY BE POURED IN–PLACE CONCRETE OR PRECAST. MANHOLE RISERS AND TOPS SHALL BE PRECAST SECTIONS WITH A MINIMUM COMPRESSIVE STRENGTH OF 4000 PSI. TOPS SHALL BE ECCENTRIC CONES EXCEPT WHERE INSUFFICIENT HEADROOM REQUIRES FLAT TOPS. SOME OR ALL OF THE STORM DRAIN MANHOLES REQUIRED WILL BE OVERSIZED MANHOLES. INTERIOR DIMENSIONS NOTED ON THE PLANS ARE MINIMUMS. CHECK WITH MANHOLE MANUFACTURER FOR ACTUAL SIZE NEEDED FOR TYPE OF PIPE TO BE USED.
4. ALL MANHOLES LOCATED IN EASEMENT AREAS REQUIRE TAMPER PROOF LIDS. ALL MANHOLE RIMS NOT IN PAVEMENT AREA TO BE SET 12 INCHES ABOVE PROPOSED GRADE.
5. CLEANOUT PIPE, FITTINGS AND JOINTS SHALL BE THE SAME SPECIFICATION AS FOR PIPE. CASTINGS ARE SHOWN ON DETAIL AND SHALL CONFORM TO ASTM A 48 (GRADE 30). CLEANOUT RISER SHALL MATCH DOWNSTREAM PIPE DIAMETER.
6. GRANULAR BACKFILL IS TO BE COMPACTED TO 95% MAXIMUM DRY DENSITY PER AASHTO T–180 TEST METHOD AND NATIVE MATERIAL SHALL BE COMPACTED TO 85% OF IN–PLACE DRY DENSITY OF SURROUNDING SOIL.
7. RIPRAP WHERE NOTED ON THE PLANS IS TO BE CLASS 50 IN ACCORDANCE WITH OREGON STATE HIGHWAY DIVISION SPECIFICATION 714.
8. STORM DRAINS SHALL BE TESTED FOR DEFLECTION WITH A MANDREL EQUAL TO 95% OF THE PIPE SIZE BEING TESTED. IN ADDITION, STORM LINES SHALL BE VIDEO INSPECTED BY THE CONTRACTOR PER APWA, DIVISION III, SECTION 303.3.11. ALL TESTS SHALL BE WITNESSED BY THE ENGINEER.
9. A PLUMBING PERMIT FROM THE CITY OF WEST LINN BUILDING DEPARTMENT IS REQUIRED FOR STORM DRAINS BEYOND THE FIRST CLEANOUT.
10. A BACKWATER CHECK VALVE SHALL BE INSTALLED ON THE 4" ROOF DRAIN SERVICE TO ANY LOT THE HAS THE END OF ITS ROOF DRAIN STUB LOCATED BELOW THE DETENTION OVERFLOW ELEVATION. THESE CHECK VALVES SHALL BE A CANPLAS 3284 4" ABS VALVE OR OTHER EQUAL LOW PRESSURE VALVE.
11. ALL MATERIALS, INSTALLATION, TESTS, AND INSPECTIONS TO BE IN STRICT ACCORDANCE WITH APWA'S STANDARD SPECIFICATIONS FOR PUBLIC WORKS CONSTRUCTION AND THE SUPPLEMENTAL STANDARDS AND SPECIFICATION OF THE CITY OF WEST LINN STREET/UTILITY DESIGN AND CONSTRUCTION STANDARDS.

EROSION CONTROL SUMMARY:

1. THE INTENT OF THE REQUIREMENT IS TO PREVENT SILTATION FROM REACHING STORM DRAIN SYSTEMS AND DRAINAGE WAYS.
2. THE MINIMUM MEASURES NEED TO BE MADE ON ALL PROJECTS.
   A)A GRAVEL PAD, AT LEAST 50 FEET LONG, IS REQUIRED WHERE VEHICLES WILL LEAVE THE CONSTRUCTION SITE.
   B)A SEDIMENT BARRIER IS TO BE CONSTRUCTED OF STRAW BALES OR A SEDIMENT FENCE WHERE NOTED IN THE DETAILS OR WHERE SEDIMENT WILL CROSS OUTSIDE THE WORK AREA.
   C)WHERE EXCAVATED MATERIAL IS PLACED ON HARD SURFACES (SUCH AS STREETS) MATERIAL MUST BE BROOMED OR SCRAPED CLEAN AS SOON AS POSSIBLE.
   D)RIPRAP EXITS FROM ALL CULVERTS AND STORM DRAIN PIPES DRAINING INTO THE DITCHES OR SWALES. RIPRAP IS TO BE CLASS 50 RIPRAP OR LARGER OR AS NOTED ELSEWHERE IN THE PLANS.
   E)RESEED OR COVER DISTURBED AREAS AS SOON AS IS POSSIBLE AND PRACTICAL BUT NO LATER THAN THE COMPLETION OF CONSTRUCTION ON THE OTHER PHASES OF WORK. EROSION CONTROL MEASURES SUCH AS HAY BALES AND SILT FENCES MUST REMAIN IN PLACE UNTIL SEEDED AREAS SHOW GROWTH SUBSTANTIAL TO PREVENT EROSION.

GENERAL:

1. APPROVAL OF THIS EROSION CONTROL (ESC) PLAN DOES NOT CONSTITUTE AN APPROVAL OF PERMANENT ROAD OR DRAINAGE DESIGN (E.G. SIZE AND LOCATION OF ROADS, PIPES, RESTRICTORS, CHANNELS, RETENTION FACILITIES, UTILITIES, ETC.)
2. THE IMPLEMENTATION OF THESE ESC PLANS AND THE CONSTRUCTION, MAINTENANCE, REPLACEMENT, AND UPGRADING OF THESE ESC FACILITIES IS THE RESPONSIBILITY OF THE APPLICANT/CONTRACTOR UNTIL ALL CONSTRUCTION IS COMPLETED AND APPROVED, AND VEGETATION OF LANDSCAPING IS ESTABLISHED.
3. THE ESC FACILITIES ON THIS PLAN MUST BE CONSTRUCTED IN CONJUNCTION WITH ALL CLEARING AND GRADING ACTIVITIES, AND IN SUCH A MANNER AS TO ENSURE THAT SEDIMENT LADEN WATER DOES NOT ENTER THE DRAINAGE SYSTEM OR VIOLATE APPLICABLE WATER STANDARDS.
4. THE ESC FACILITIES SHOWN ON THIS PLAN ARE THE MINIMUM REQUIREMENTS FOR ANTICIPATED SITE CONDITIONS. DURING THE CONSTRUCTION PERIOD, THESE ESC FACILITIES SHALL BE UPGRADED AS NEEDED FOR UNEXPECTED STORM EVENTS AND TO ENSURE THAT SEDIMENT LADEN WATER DOES NOT LEAVE THE SITE.
5. THE ESC FACILITIES SHALL BE INSPECTED DAILY BY THE APPLICANT/CONTRACTOR AND MAINTAINED AS NECESSARY TO ENSURE THEIR CONTINUED FUNCTIONING.
6. THE ESC FACILITIES ON INACTIVE SITES SHALL BE INSPECTED AND MAINTAINED A MINIMUM OF ONCE A MONTH, OR WITHIN 24 HOURS FOLLOWING A STORM EVENT.
7. AT NO TIME SHALL MORE THAN ONE FOOT OF SEDIMENT BE ALLOWED TO ACCUMULATE WITHIN A TRAPPED CATCH BASIN. ALL CATCH BASINS AND CONVEYANCE LINES SHALL BE CLEANED PRIOR TO PAVING. THE CLEANING OPERATION SHALL NOT FLUSH SEDIMENT LADEN WATER INTO THE DOWNSTREAM SYSTEM.
8. STABILIZED CONSTRUCTION ENTRANCES SHALL BE INSTALLED AT THE BEGINNING OF CONSTRUCTION AND MAINTAINED FOR THE DURATION OF THE PROJECT. ADDITIONAL MEASURES MAY BE REQUIRED TO ENSURE THAT ALL PAVED AREAS ARE KEPT CLEAN FOR THE DURATION OF THE PROJECT.

GENERAL GRADING AND EROSION CONTROL:

1. CLEAN WASTE MATERIAL EXCAVATED FROM ROAD CUT OR TRENCHING AREAS NOT USED IN STREET FILL AREAS MAY BE SPREAD EVENLY ACROSS LOT AREAS IN DEPTHS NOT TO EXCEED SIX INCHES, EXCEPT WHERE NOTED OTHERWISE ON THE PLANS.
2. DURING CONSTRUCTION, STRAW BALES, CUTOFF TRENCHES OR SOME OTHER METHOD OF RUNOFF CONTROL SHALL BE USED TO PREVENT EROSION AND/OR SILTATION FROM CROSSING OUTSIDE THE WORK AREA BOUNDARIES.
3. LARGE ORGANIC MATERIAL, MISCELLANEOUS PIPE OR CONSTRUCTION MATERIAL MUST BE REMOVED FROM THE SITE AND DISPOSED OF PROPERLY.
4. NO FILLING OR CUTTING SHALL BE DONE OUTSIDE OF APPROVED GRADING AREAS.
5. ALL EROSION CONTROL FACILITIES SHALL MEET THE REQUIREMENTS OF THE CLACKAMAS COUNTY DEPARTMENT OF UTILITIES, EROSION PREVENTION AND SEDIMENT CONTROL PLANS TECHNICAL GUIDANCE HANDBOOK (ECTGH), REVISED AUGUST, 1994; CHAPTER 31 OF THE COMMUNITY DEVELOPMENT CODE; AND THE OREGON ADMINISTRATIVE RULES.

SEEDING/MULCHING:

1. ALL AREAS DISTURBED DURING CONSTRUCTION TO BE GRADED TO DRAIN AND COMPACTED TO A MINIMUM OF 90% OF AASHTO T–99 IMMEDIATELY AFTER INSTALLATION OF UTILITIES OR GRADING.
2. RECOMMENDED SEED MIXTURE: 80% ELKA DWARF PERENNIAL RYEGRASS AND 20% CREEPING RED FESCUE, BY WEIGHT. APPLICATION RATE SHALL BE 100 POUNDS MINIMUM PER ACRE.
3. FERTILIZER SHALL BE 12–16–8 WITH 50% OF THE NITROGEN DERIVED FROM UREA FORMALDEHYDE, AND APPLIED AT A RATE OF 400 POUNDS PER ACRE.
4. SEED AND MULCH AT A RATE OF 2000 LBS/AC WITH HEAVY BONDING AGENT OR NETTING AND ANCHORS. MULCH SHALL BE A WOOD CELLULOSE FIBER OR OTHER MATERIAL SUITABLE FOR HYDROMULCHING.
5. TEMPORARY OR PERMANENT HYDROSEEDING ARE ACCEPTABLE SEEDING AND MULCHING MUST BE PROVIDED WHENEVER PERENNIAL COVER CANNOT BE ESTABLISHED ON SITES WHICH WILL BE EXPOSED FOR 60 DAYS OR MORE.

SEDIMENT FENCE:

1. THE FILTER FABRIC SHALL BE PURCHASED IN A CONTINUOUS ROLL CUT TO THE LENGTH OF THE BARRIER TO AVOID USE OF JOINTS. WHEN JOINTS ARE NECESSARY, FILTER CLOTH SHALL BE SPLICED TOGETHER ONLY AT A SUPPORT POST, WITH A MINIMUM 6–INCH OVERLAP, AND BOTH ENDS SECURELY FASTENED TO THE POST.
2. THE FILTER FABRIC FENCE SHALL BE INSTALLED TO FOLLOW THE CONTOURS, WHERE FEASIBLE. THEN FENCE POSTS SHALL BE SPACED A MAXIMUM OF SIX FEET APART AND DRIVEN SECURELY INTO THE GROUND A MINIMUM OF 18 INCHES.
3. A TRENCH SHALL BE EXCAVATED, ROUGHLY 6 INCHES WIDE BY 6 INCHES DEEP, UPSLOPE AND ADJACENT TO THE WOOD POST TO ALLOW THE FILTER FABRIC TO BE BURIED. BURY THE BOTTOM OF THE FABRIC 6" VERTICALLY BELOW FINISHED GRADE. ALL AREAS OF FILTER FABRIC TRENCH SHALL BE COMPACTED.
4. THE FILTER FABRIC SHALL BE INSTALLED WITH STITCHED LOOPS OVER FENCE POSTS. THE FENCE POST SHALL BE CONSTRUCTED OF 2" X 2" FIR, PINE, OR STEEL. THE FENCE POST MUST BE A MINIMUM OF 48" LONG. THE FILTER FABRIC SHALL NOT BE STAPLED OR ATTACHED TO EXISTING TREES.
5. SEDIMENT FENCES SHALL BE REMOVED WHEN THEY HAVE SERVED THEIR USEFUL PURPOSE, BUT NOT BEFORE THE UPSLOPE AREA HAS BEEN PERMANENTLY STABILIZED.
6. SEDIMENT FENCES SHALL BE INSPECTED BY APPLICANT/CONTRACTOR IMMEDIATELY AFTER EACH RAINFALL, AND AT LEAST DAILY DURING PROLONGED RAINFALL. ANY REQUIRED REPAIRS SHALL BE MADE IMMEDIATELY.

AS-BUILT
DATE 5/31/05 SRH

SFA Design Group, LLC
STRUCTURAL | CIVIL | LAND USE PLANNING
9020 SW Washington Square Dr. Suite 350
Portland, Oregon 97223
p: (503) 641-8311 f: (503) 643-7905
sfadesigngroup.com

CONSTRUCTION NOTES
FIELD'S PARK

VALID THROUGH 12-31-05

NO.	DATE	REVISION	BY
1	5/31/05	AS-BUILT	SRH

DESIGNED BY SRH DATE 12/06/04
DRAWN BY SRH DATE 12/06/04
REVIEWED BY BEF DATE 12/06/04
PROJECT NO. 105-001 REF.
SCALE HORZ: N/A VERT: N/A
105NOTE.DWG

SHEET 2 OF 12

PROJECT	FIELDS
NO.	105-001
TYPE	CONSTRUCTION

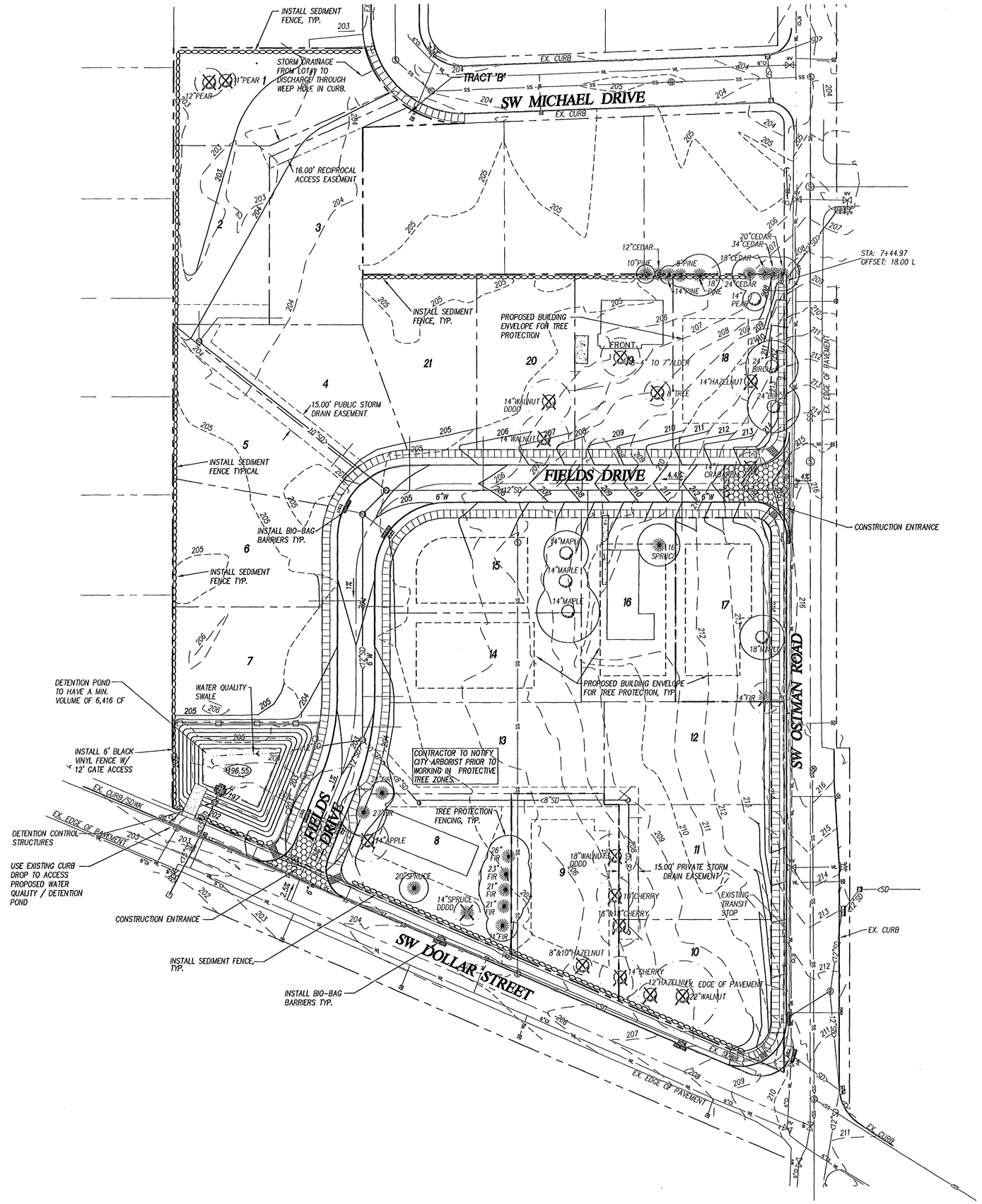

LEGEND

- EXISTING 1' CONTOUR
- EXISTING 5' CONTOUR
- PROPOSED 1' CONTOUR
- PROPOSED 5' CONTOUR
- <12"SD PROPOSED STORM DRAIN LINE
- PROPOSED BIOBAG BARRIER
- PROPOSED SEDIMENT CONTROL FENCE
- PROPOSED CONSTRUCTION ENTRANCE
- EXISTING EVERGREEN TREE
- EXISTING DECIDUOUS TREE
- TREE TO BE SAVED
- TREE TO BE REMOVED
- PROPOSED BUILDING ENVELOPE FOR TREE PROTECTION
- TREE CANOPY TO BE PRESERVED
- TREE CANOPY TO BE REMOVED

AS-BUILT
DATE 5/31/05 SRH

GRAPHIC SCALE
(IN FEET)
1 inch = 40 ft.

NORTH

SFA Design Group, LLC
STRUCTURAL | CIVIL | LAND USE PLANNING
9020 SW Washington Square Dr. Suite 350
Portland, Oregon 97223
p: (503) 641-3311 f: (503) 643-7905
sfadesigngroup.com

GRADING AND EROSION CONTROL PLAN
FIELDS PARK

REGISTERED PROFESSIONAL ENGINEER 54627PE OREGON MAR. 12, 2002 BRENT E. FILTY
10/24/05
VALID THROUGH 12-31-05

NO.	DATE	REVISION	BY
1	5/31/05	AS-BUILT	SRH

DESIGNED BY SRH DATE 12/06/04
DRAWN BY SRH DATE 12/06/04
REVIEWED BY BEF DATE 12/06/04
PROJECT NO. 105-001 REF.
SCALE HORZ. 1"=40' VERT. N/A
105GRADDWG

SHEET 3 OF 12

PROJECT FIELDS
NO. 105-001
TYPE CONSTRUCTION

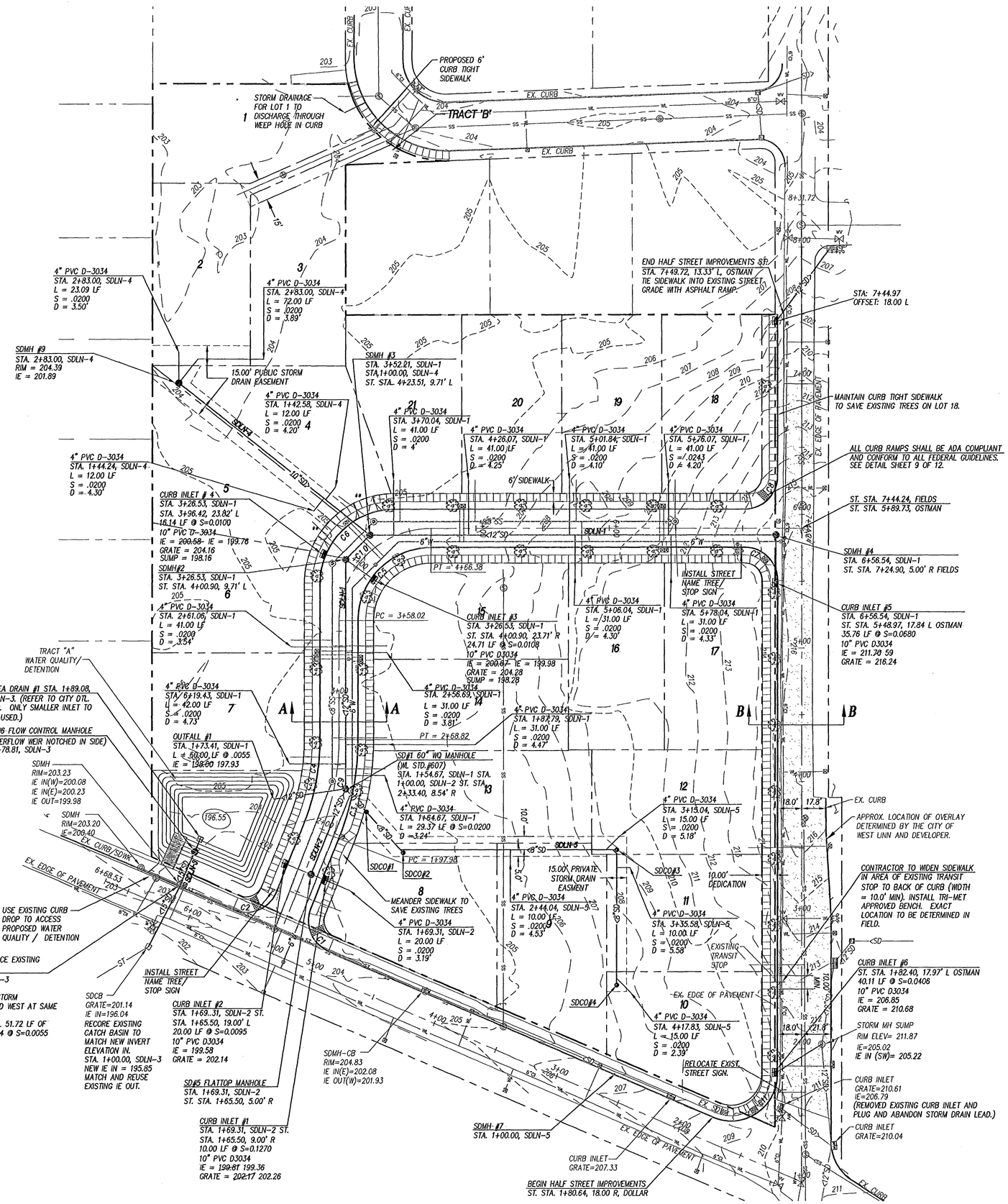

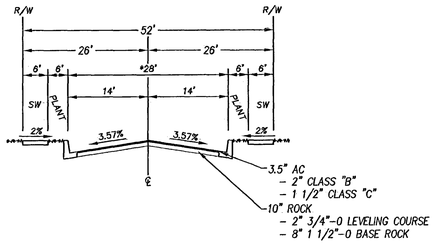

TYPICAL STREET SECTION
52' WIDTH RIGHT-OF-WAY
FIELDS DRIVE
STREET SECTION A-A

*28' OF PAVEMENT TO ACCOMMODATE TWO LANES OF TRAFFIC AND PARKING ON ONE SIDE

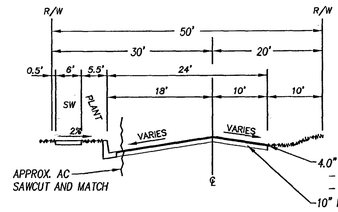

AS-BUILT
* CITY TO FIELD VERIFY THE LIMITS OF CONTSTRUCTION IN SW OSTMAN. SEE APPROX. LOCATION ON PLANS SHOWING PAVING LIMITS DETERMINED IN THE FIELD.

TYPICAL STREET SECTION
50' WIDTH RIGHT-OF-WAY
SW OSTMAN ROAD
STREET SECTION B-B

LEGEND

- PROPOSED SIDEWALK
- PROPOSED PAVEMENT
- <8"SD PROPOSED STORM SEWER LINE
- <8"SS PROPOSED SANITARY SEWER LINE
- 8"W PROPOSED WATER LINE
- PROPOSED STREET TREE
- ** APPROX. D/W LOCATIONS
- AS-BUILT OVERLAY PAVEMENT

CURVE TABLE

CURVE	LENGTH	RADIUS	DELTA	LOCATION
C1	38.65	25.00	88°34'44"	CURB
C2	39.87	25.00	91°22'58"	CURB
C3	76.21	199.00	21°56'30"	CURB
C4	65.49	171.00	21°56'30"	CURB
C5	86.37	55.00	89°58'37"	CURB
C6	86.37	55.00	89°58'37"	CURB
C7	39.28	25.00	90°01'23"	CURB
C8	39.26	25.00	89°58'37"	CURB
C9	70.85	185.00	21°56'30"	CL
C10	108.36	69.00	89°58'37"	CL
C11	69.25	35.00	113°22'18"	CURB

CURB RETURN DATA

NO.	BC	1/4 Δ	2/4 Δ	3/4 Δ	EC
C1	203.51	203.22	202.93	202.64	202.35
C2	202.86	202.73	202.60	202.47	202.34
C3	202.44	202.62	202.80	202.97	203.15
C4	202.44	202.62	202.80	202.97	203.15
C5	204.04	204.31	204.59	204.86	205.13
C6	204.10	204.26	204.42	204.58	204.74
C7	213.95	214.42	214.89	215.36	215.83
C8	213.95	214.05	214.15	214.24	214.34
C11	208.20	208.84	209.48	210.13	210.77

* CURB RETURN GRADES REPRESENT FLOW LINE ELEVATIONS.

AS-BUILT
DATE 5/31/05 SRH

GRAPHIC SCALE
40 0 20 40 80 160
(IN FEET)
1 inch = 40 ft.

NORTH

SFA Design Group, LLC
STRUCTURAL | CIVIL | LAND USE PLANNING
9020 SW Washington Square Dr. Suite 350
Portland, Oregon 97223
p: (503) 641-8311 f: (503) 643-7905
sfadesigngroup.com

STREET AND STORM PLAN
FIELD'S PARK

REGISTERED PROFESSIONAL ENGINEER OREGON JAN. 12, 2005 BRENT E. FOLTICH
VALID THROUGH 12-31-05

NO.	DATE	REVISION	BY
1	5/31/05	AS-BUILT	SRH

DESIGNED BY SRH DATE 12/06/04
DRAWN BY SRH DATE 12/06/04
REVIEWED BY BEF DATE 12/06/04
PROJECT NO. 105-001 REF.
SCALE HORZ.1"=40' VERT.1"=4'
105STRT.DWG

SHEET 4 OF 12

PROJECT FIELDS
NO. 105-001
TYPE CONSTRUCTION

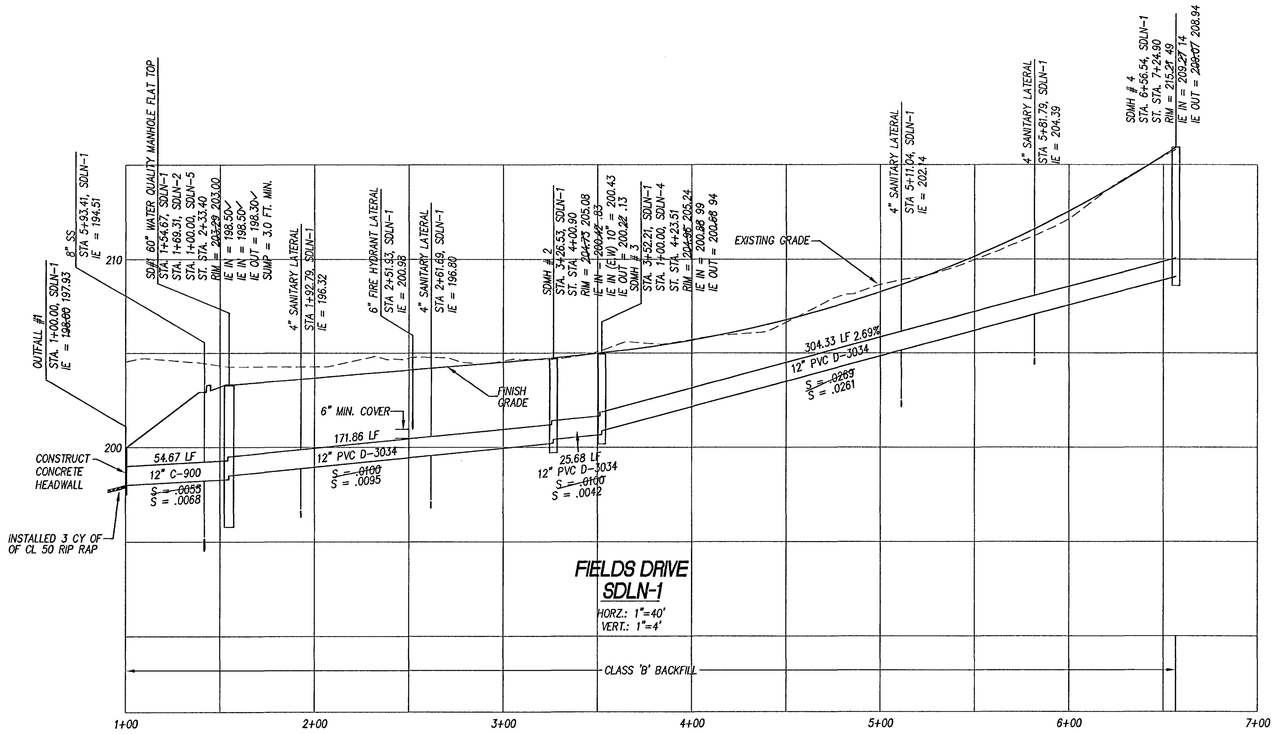

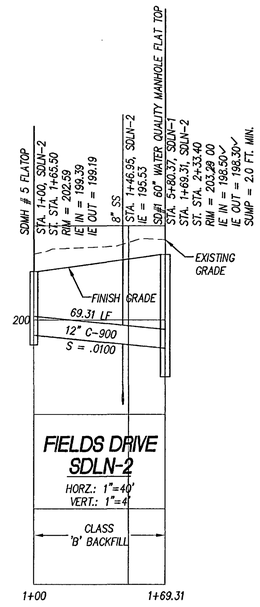

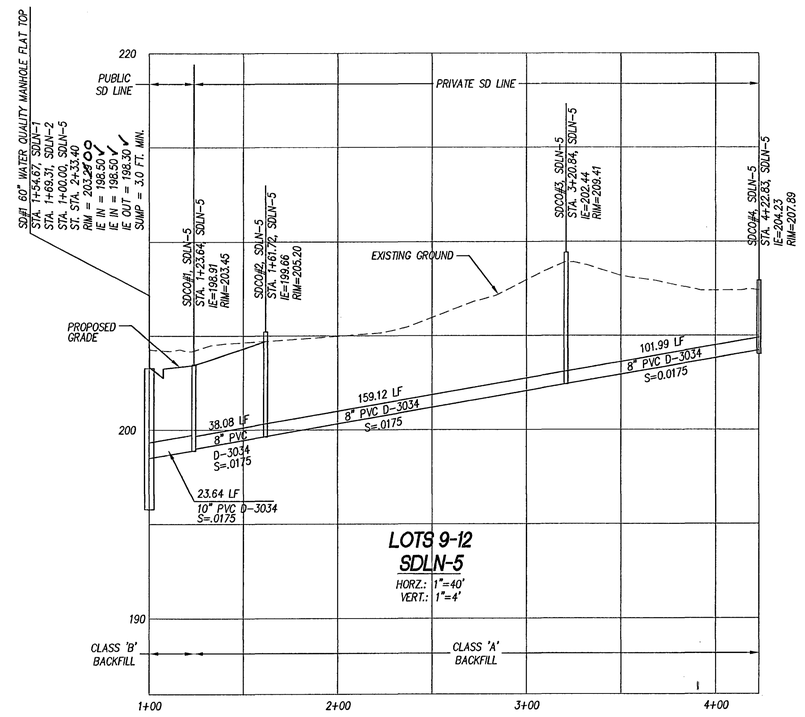

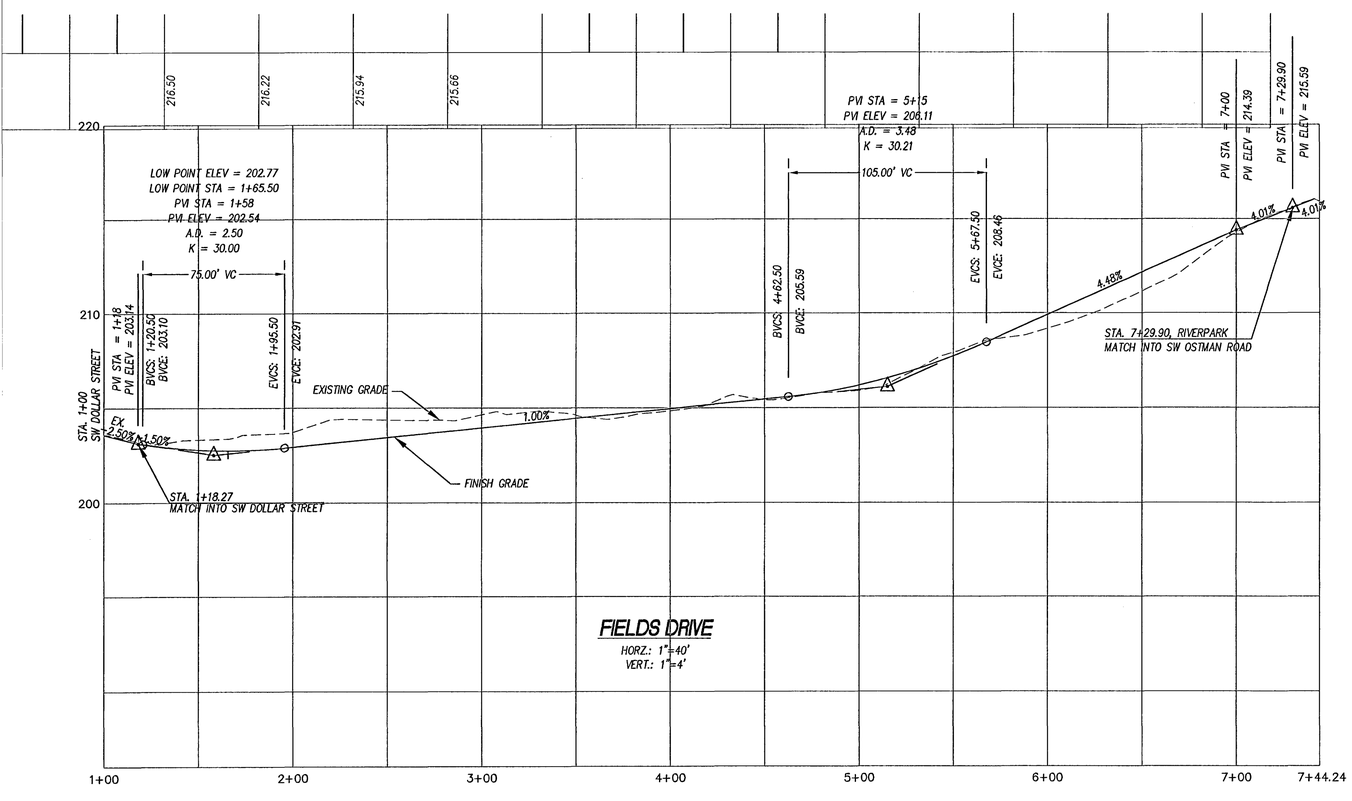

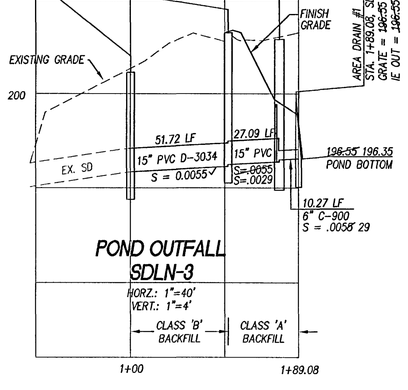

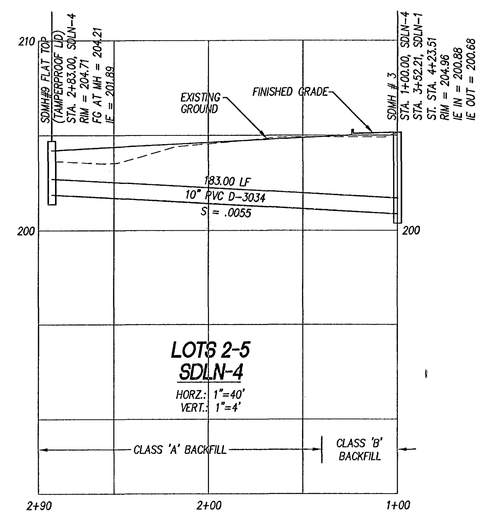

AS-BUILT

DATE 5/31/05 SRH

SFA Design Group, LLC
STRUCTURAL | CIVIL | LAND USE PLANNING
9020 SW Washington Square Dr. Suite 350
Portland, Oregon 97223
p: (503) 641-3311 f: (503) 643-7905
sfadesigngroup.com

STREET AND STORM PROFILES
FIELD'S PARK

REGISTERED PROFESSIONAL ENGINEER — OREGON — MAR. 12, 1974 — BRENT E. HOLT — 54627PE

10/24/05

VALID THROUGH 12-31-05

NO.	DATE	REVISION	BY
1	5/31/05	AS-BUILT	SRH

DESIGNED BY SRH DATE 12/06/04
DRAWN BY SRH DATE 12/06/04
REVIEWED BY BEF DATE 12/06/04
PROJECT NO. 105-001 REF.
SCALE HORZ. 1"=40' VERT. 1"=4'
105STRT.DWG

SHEET 5 OF 12

PROJECT FIELDS
NO. 105-001
TYPE CONSTRUCTION

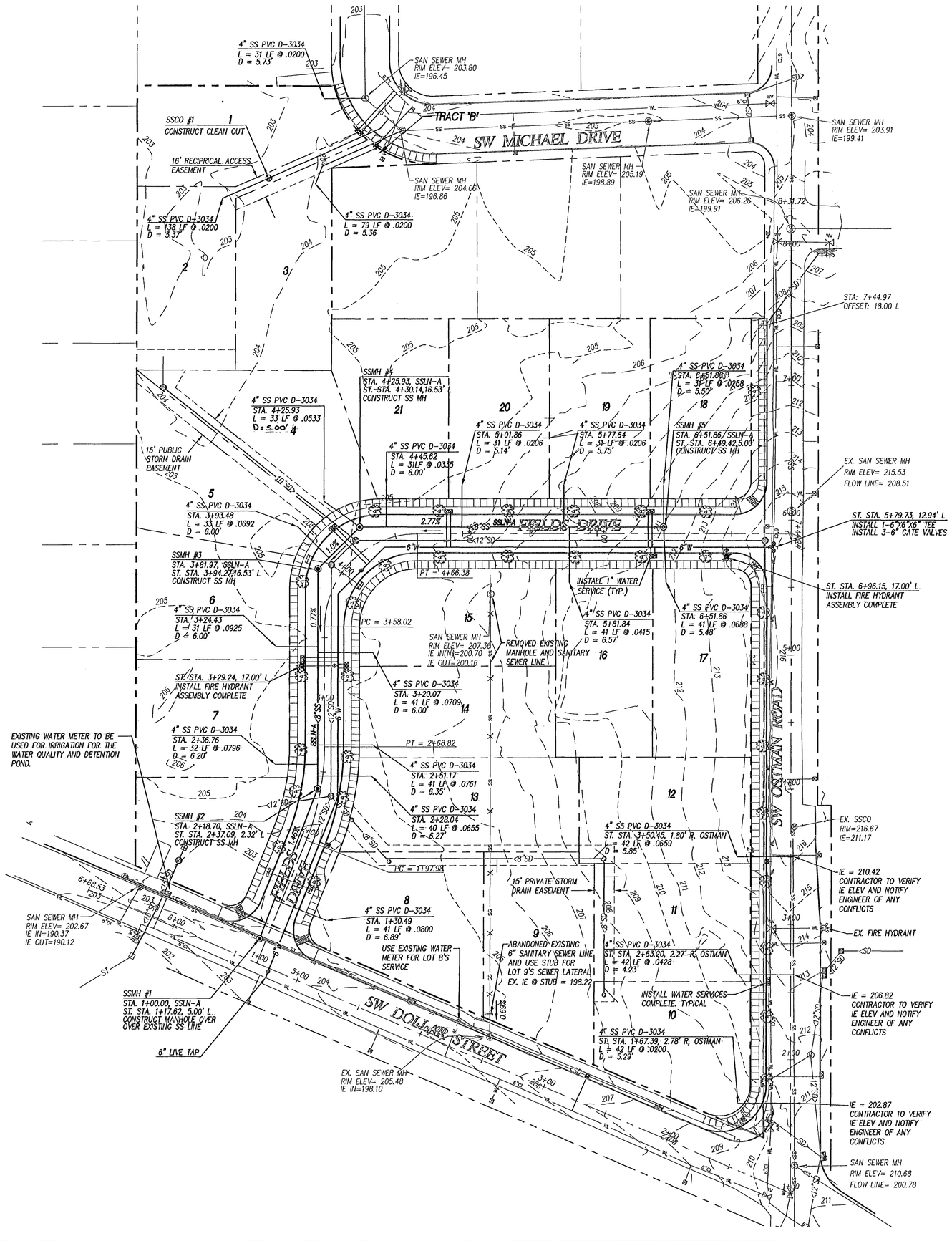

LEGEND

- PROPOSED SIDEWALK
- <8"SS — PROPOSED SANITARY SEWER LINE
- 8"W — PROPOSED WATER LINE
- <12"SD — PROPOSED STORM DRAIN LINE
- PROPOSED STREET TREE

AS-BUILT

DATE 5/31/05 SRH

NORTH

GRAPHIC SCALE

40 0 20 40 80 160

(IN FEET)
1 inch = 40 ft.

SFA Design Group, LLC
STRUCTURAL | CIVIL | LAND USE PLANNING
9020 SW Washington Square Dr. Suite 350
Portland, Oregon 97223
p: (503) 641-8311 f: (503) 643-7905
sfadesigngroup.com

SANITARY AND WATER PLAN
FIELD'S PARK

REGISTERED PROFESSIONAL ENGINEER — OREGON — MAR. 12, 2002 — BRENT E. F. HOLTH

VALID THROUGH 12-31-05

NO.	DATE	REVISION	BY
1	5/31/05	AS-BUILT	SRH

DESIGNED BY SRH DATE 12/06/04
DRAWN BY SRH DATE 12/06/04
REVIEWED BY BEF DATE 12/06/04
PROJECT NO. 105-001 REF.
SCALE HORZ. 1"=40' VERT. 1"=4'
105SANSD.DWG

SHEET 6 OF 12

PROJECT FIELDS
NO. 105-001
TYPE CONSTRUCTION

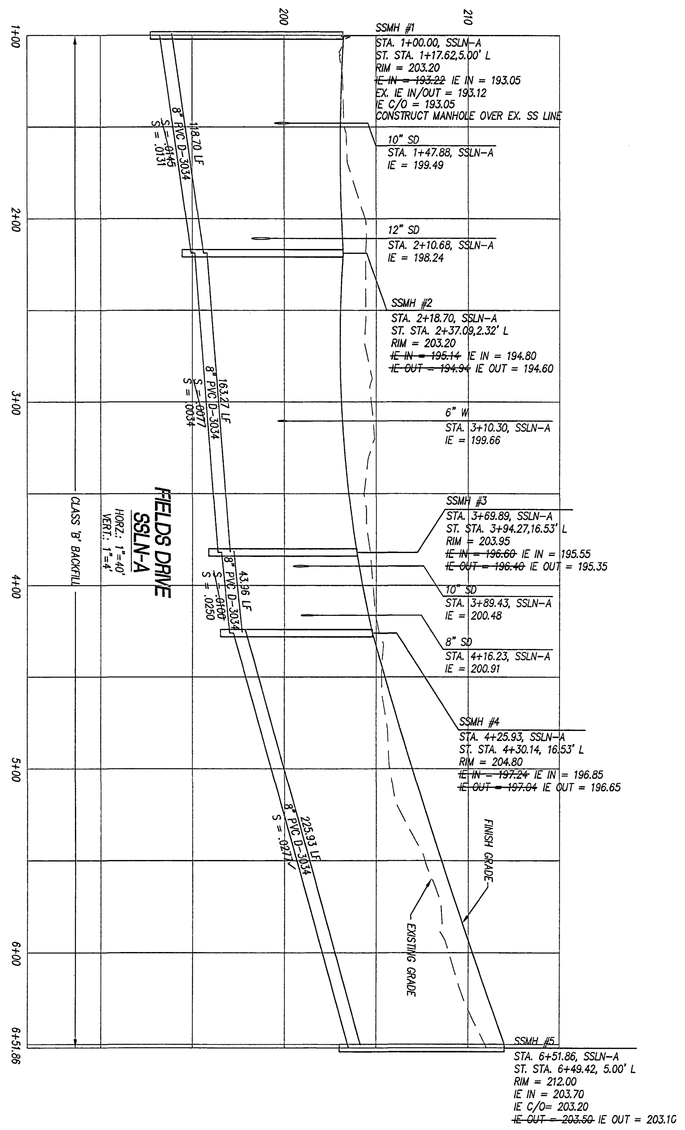

AS-BUILT
DATE 5/31/05 SRH

TYPE CONSTRUCTION	PROJECT NO. 105-001	FIELDS	SHEET 7 OF 12

DESIGNED BY SRH DATE 12/06/04
DRAWN BY SRH DATE 12/06/04
REVIEWED BY BEF DATE 12/06/04
PROJECT NO. 105-001 REF. _____
SCALE HORZ: 1"=40'
VERT: 1"=4'
105ISANS.DWG

NO.	DATE	REVISION	BY
1	5/31/05	AS-BUILT	SRH

10/24/05
REGISTERED PROFESSIONAL ENGINEER 54627PE OREGON MAR. 12, 2002 BREVIT E. FITCH
VALID THROUGH 12-31-05

SANITARY PROFILES
FIELD'S PARK

SFA Design Group, LLC
STRUCTURAL | CIVIL | LAND USE PLANNING
9020 SW Washington Square Dr. Suite 350
Portland, Oregon 97223
p: (503) 641-8311 f: (503) 643-7905
sfadesigngroup.com

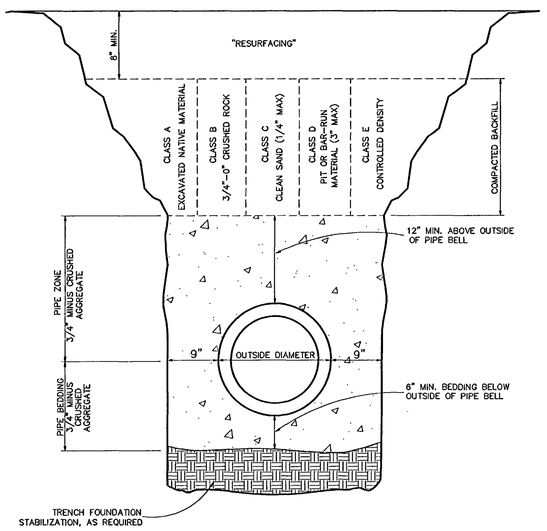

Trench Backfill, Bedding and Pipe Zone

West Linn

DATE:	JAN 2000
DRAWING NO.	WL-200
FILE NO.	00-200

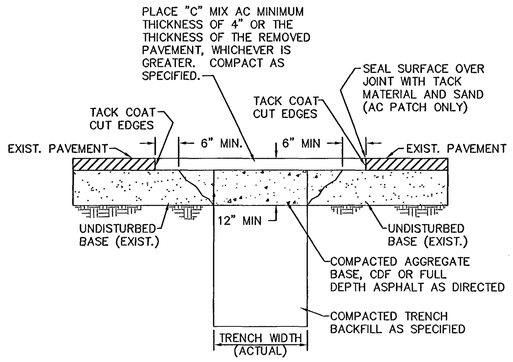

NOTES:

1. ALL EXISTING AC OR PCC PAVEMENT SHALL BE SAWCUT TO NEAT, STRAIGHT LINES PRIOR TO REPAVING.
2. CONCRETE PAVEMENT SHALL BE REPLACED WITH CONCRETE TO A MINIMUM THICKNESS OF REMOVED PAVEMENT, WHICHEVER IS GREATER.
3. IF EXISTING BASE MATERIAL IS CTB OR ATB, THEN REPLACEMENT BASE MATERIAL SHALL MATCH EXISTING.
4. ALL UTILITIES SHALL HAVE A MINIMUM COVER OF 36".
5. ALL TRENCH BACKFILL SHALL BE COMPACTED TO 95% OF MAXIMUM DENSITY PER AASHTO T-180 OR AS SPECIFIED IN THE CONTRACT DOCUMENTS.
6. ALL TRENCH BACKFILL AND PATCHING SHALL CONFORM TO THE STANDARDS AND SPECIFICATIONS OF THE CITY OF WEST LINN.
7. BACKFILL SHALL BE PLACED AND COMPACTED IN A MAXIMUM OF 6" LIFTS.

Street T-Cut

West Linn

DATE:	JAN 2000
DRAWING NO.	WL-203
FILE NO.	00-203

NOTE:
MANHOLE LID TO BE 1' ABOVE FINISH GRADE IN EASEMENTS.

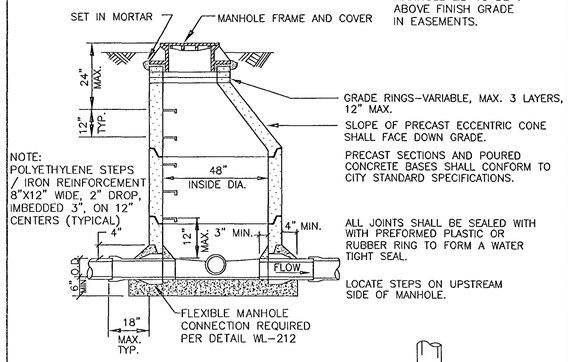

MANHOLES SHALL HAVE A 12" MIN. 24" MAX. BOTTOM RISER, TO BE BEDDED IN THE CONCRETE AS THE BASE TAKES ITS INITIAL SET.

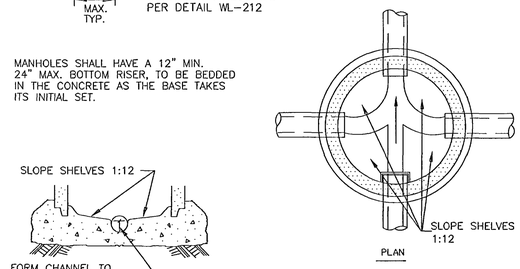

NOTE:
CHANNELS MUST BE ABLE TO PASS A 7"X30" CYLINDER INTO PIPES. SHELF SHALL NOT BE BELOW THE TOP OF THE PIPE.

Standard Manhole for Less than 36" Pipe

West Linn

DATE:	JAN 2000
DRAWING NO.	WL-207
FILE NO.	00-207

NOTE:
MANHOLE LID TO BE 6" ABOVE FINISH GRADE IN EASEMENTS.

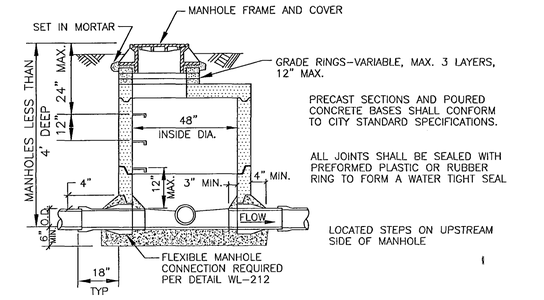

ALL MANHOLES SHALL HAVE A 12" MIN. 24" MAX. BOTTOM RISER, TO BE BEDDED AS THE CONCRETE IN THE BASE TAKES ITS INITIAL SET.

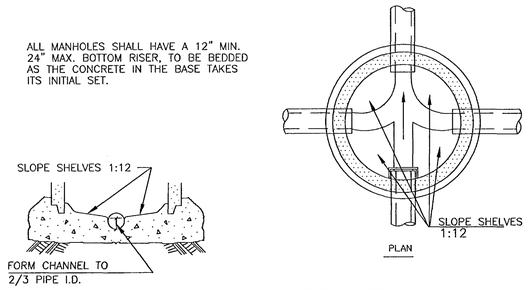

NOTE:
CHANNELS MUST BE ABLE TO PASS A 7"X30" CYLINDER INTO PIPES. SHELF SHALL NOT BE BELOW SPRING LINE OF THE PIPE.

Shallow Manhole for Less than 36" Pipe

West Linn

DATE:	JAN 2000
DRAWING NO.	WL-208
FILE NO.	00-208

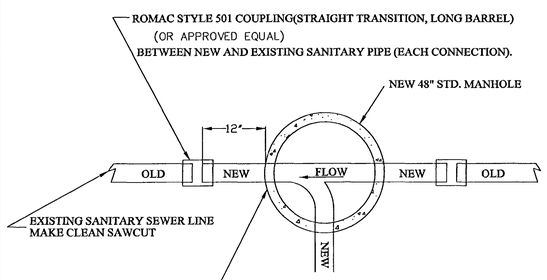

NEW PVC (ASTM 3034, SDR 35) PIPE
PIPE MATCHING EXISTING SANITARY SEWER LINE SIZE

(TYPICAL CONNECTION, MULTIPLE CONNECTIONS MAY EXIST)

Manhole Detail-Plan View New Manhole to Existing Sewer Line Connection

West Linn

DATE:	JAN 2000
DRAWING NO.	WL-210
FILE NO.	00-210

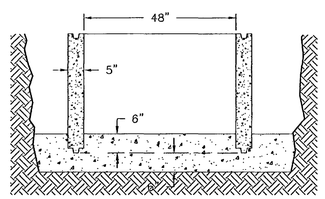

POURED IN PLACE MANHOLE BASE

NOTE:
PIPE CONNECTIONS MUST HAVE FLEXIBLE CONNECTIONS

NOTE:
CONCRETE TO EXTEND 12" OUTSIDE OF MANHOLE WALL AND 6" ABOVE THE BOTTOM OF THE BASE SECTION

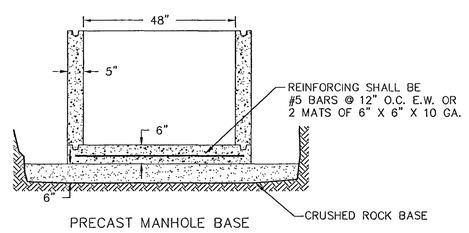

PRECAST MANHOLE BASE

NOTE:
USE 3300 PSI CONCRETE FOR EITHER MANHOLE BASE.

Manhole Base

West Linn

DATE:	JAN 2000
DRAWING NO.	WL-211
FILE NO.	00-211

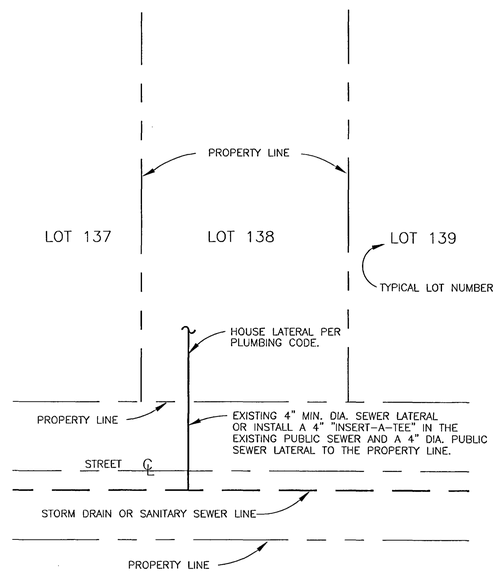

TYPICAL CONNECTION FOR SINGLE FAMILY RESIDENCE.

Sewer Connection Single Family

West Linn

DATE:	JAN 2000
DRAWING NO.	WL-216
FILE NO.	00-216

NOTES:

1. COVER AND FRAME TO BE MACHINED FOR TRUE BEARING.
2. MATERIAL SHALL BE GRAY CAST IRON A.S.T.M. A-48 CLASS 30.
3. TWO HOLE LID FOR SANITARY SEWER.
4. 16 HOLE LID FOR STORM SEWER.

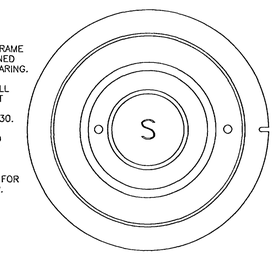

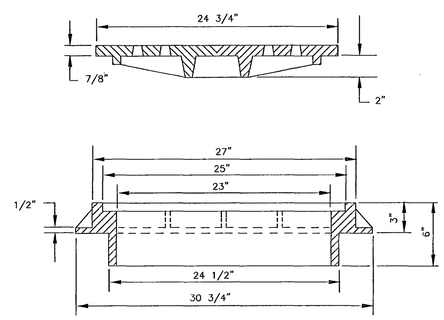

AS-BUILT
DATE 5/31/05 SRH

Suburban Manhole Frame and Cover 3" Depth

West Linn

DATE:	JAN 2000
DRAWING NO.	WL-300
FILE NO.	00-300

SFA Design Group, LLC
STRUCTURAL | CIVIL | LAND USE PLANNING
9020 SW Washington Square Dr. Suite 350
Portland, Oregon 97223
p: (503) 641-8311 f: (503) 643-7905
sfadesigngroup.com

DETAIL SHEET
FIELD'S PARK

NO.	DATE	REVISION	BY
1	5/31/05	AS-BUILT	SRH

DESIGNED BY SRH DATE 12/06/04
DRAWN BY SRH DATE 12/06/04
REVIEWED BY BSF DATE 12/60/04
PROJECT NO. 105-001 REF.
SCALE HORZ: N/A VERT: N/A

SHEET 8 OF 12

PROJECT	FIELDS
NO.	105-001
TYPE	CONSTRUCTION

Standard Fire Hydrant Assembly

NOTES:

1. HYDRANTS TO BE MUELLER CENTURION MDL A-423 ONLY WITH 1 1/2" OPER. NUTS OR CLOW MEDDALION F-2545.
2. HYDRANT COLOR TO BE MILLER EQUIP. ENAMEL O E 40 (SAFETY YELLOW).
3. JOINTS TO BE RESTRAINED BY 3/4" DIA. GALVANIZED STEEL RODS AND THRUST BLOCKS OR MEGA LUGS AND THRUST BLOCKS.
4. ALL FITTINGS IN CONTACT W/CONCRETE SHALL BE WRAPPED IN PLASTIC. HYDRANT DRAIN HOLES TO REMAIN OPEN TO DRAIN ROCK AND OPERATIONAL.
5. MIN. 4 CU. FT. OF 1 1/2"-3/4" CLEAN DRAIN ROCK SHALL BE PLACED AROUND SHOE UP TO A MIN. OF 6" ABOVE DRAIN OUTLETS.
6. WHERE PLANTER STRIP EXISTS, HYDRANT SHALL BE PLACED SO FRONT PORT IS A MINIMUM OF 24" BEHIND FACE OF CURB.
7. WHERE INTEGRAL S/W & CURB EXISTS, HYD. SHALL BE PLACED AT BACK OF SIDEWALK, OR AS DIRECTED BY ENGINEER.
8. BURY OF HYDRANT SHALL BE MEASURED FROM FINISHED GRADE TO BOTTOM OF CONNECTING PIPE.
9. THRUST BLOCK AT FIRE HYDRANT TEE SHALL HAVE A 3.7 SQ. FT. BEARING AREA.
10. HYDRANT VALVE SHALL BE MUELLER RESILIENT WEDGE GATE VALVE #A-2360-16 ONLY.
11. WHERE NO SIDEWALK EXISTS, PLACE A 5'x 5'x 4" THICK A.C. OR CONC. APRON AROUND HYDRANT.
12. NO EXTENTIONS ALLOWED.

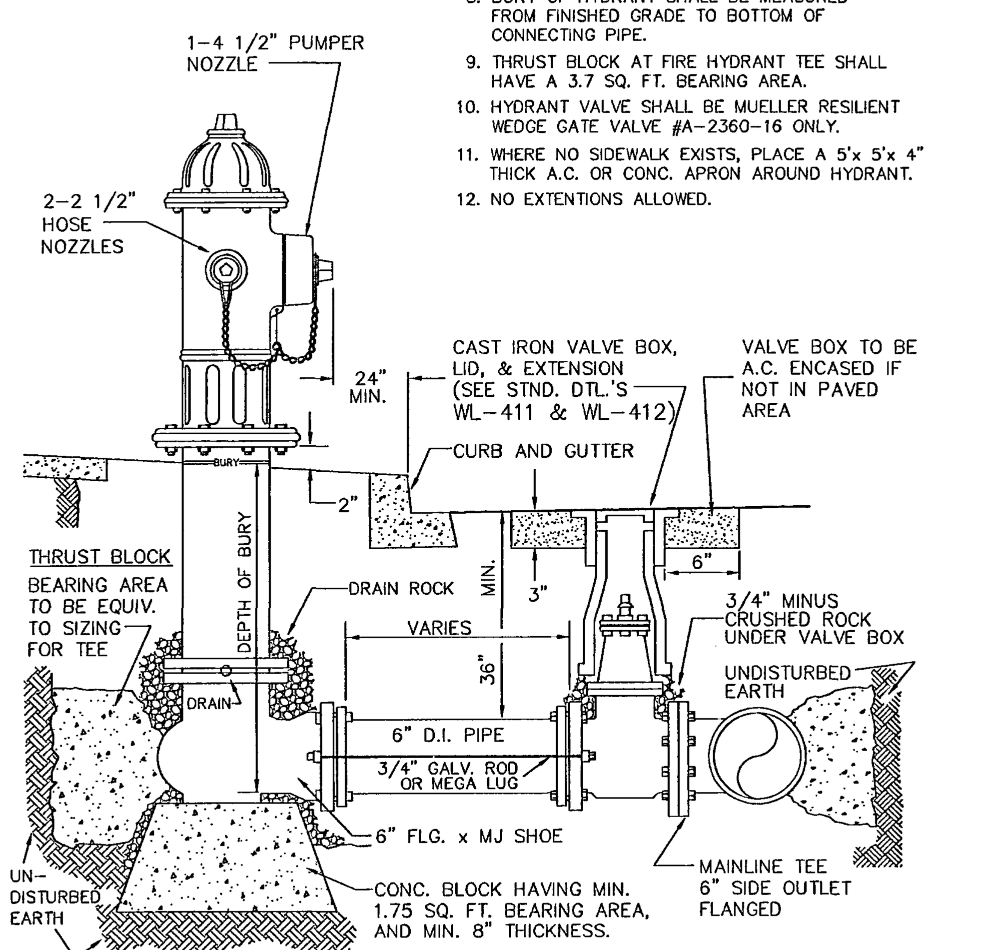

Standard Fire Hydrant Assembly

West Linn — DATE: JAN 2000 — DRAWING NO. WL-401 — FILE NO. 00-401

Standard 1" Water Service

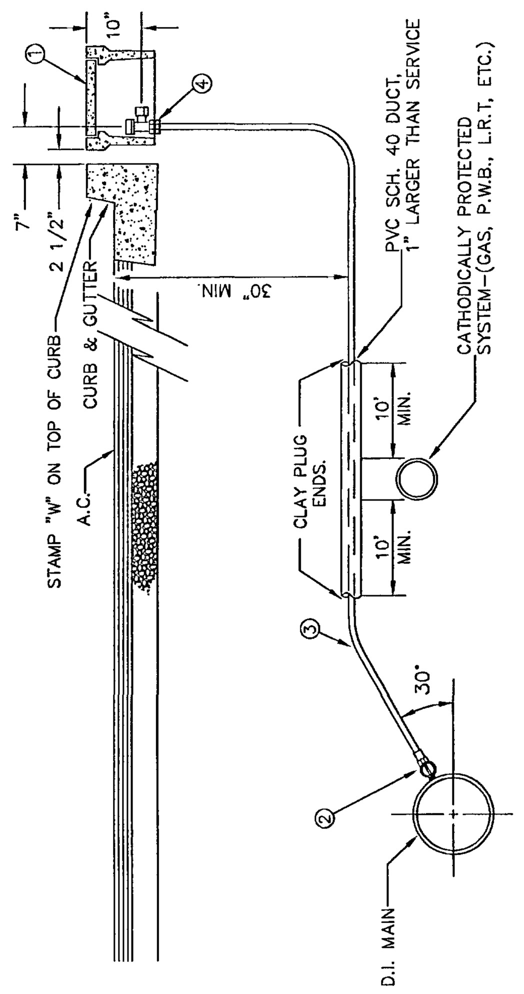

MATERIALS:

1. BROOKS METER BOX, BODY NO. 37, LID AND COVER NO. 37-S.
2. MUELLER CORP. STOP NO. H-15008 OR FORD F1000-4Q SET CORP. STOP WITH OPERATING NUT AT 3 OR 9 O'CLOCK.
3. 1" SOFT TEMPER, TYPE 'K' COPPER TUBING COMPLYING WITH ASTM B-88.
4. MUELLER ANGLE METER STOP NO. H-14258 (FORD NO. KV43-444W-Q).

NOTES:

1. SUBSTITUTES FOR ANY MATERIALS SHOWN SHALL BE APPROVED BY THE CITY ENGINEER.
2. ALL PIPE AND STRUCTURE ZONES SHALL BE BACKFILLED USING 3/4" MINUS CRUSHED AGG. AND COMPACTED TO 95% MAX DENSITY AS DETERMINED BY AASHTO T-180.
3. WHEN AN ACTIVE CATHODIC PROTECTED SYSTEM IS ENCOUNTERED, SCH. 40 PVC SHALL BE INSTALLED AS SHOWN ABOVE WITH CLAY PLUG.
4. METER BOX SHALL BE CENTERED OVER THE COMPLETED METER ASSEMBLY.
5. FOR VACANT RESIDENTIAL LOTS, LOCATE SINGLE SERVICE 18" INSIDE SIDE LOT LINE.
6. TAPS INTO MAIN TO BE AT 18" CENTERLINE MIN.
7. ANGLE METER STOPS TO BE 18" FROM PROPERTY LINE AND NOT IN DRIVEWAY APPROACH.

Standard 1" Water Service

West Linn — DATE: JAN 2000 — DRAWING NO. WL-402 — FILE NO. 00-402

Typical Utility Placement Detail

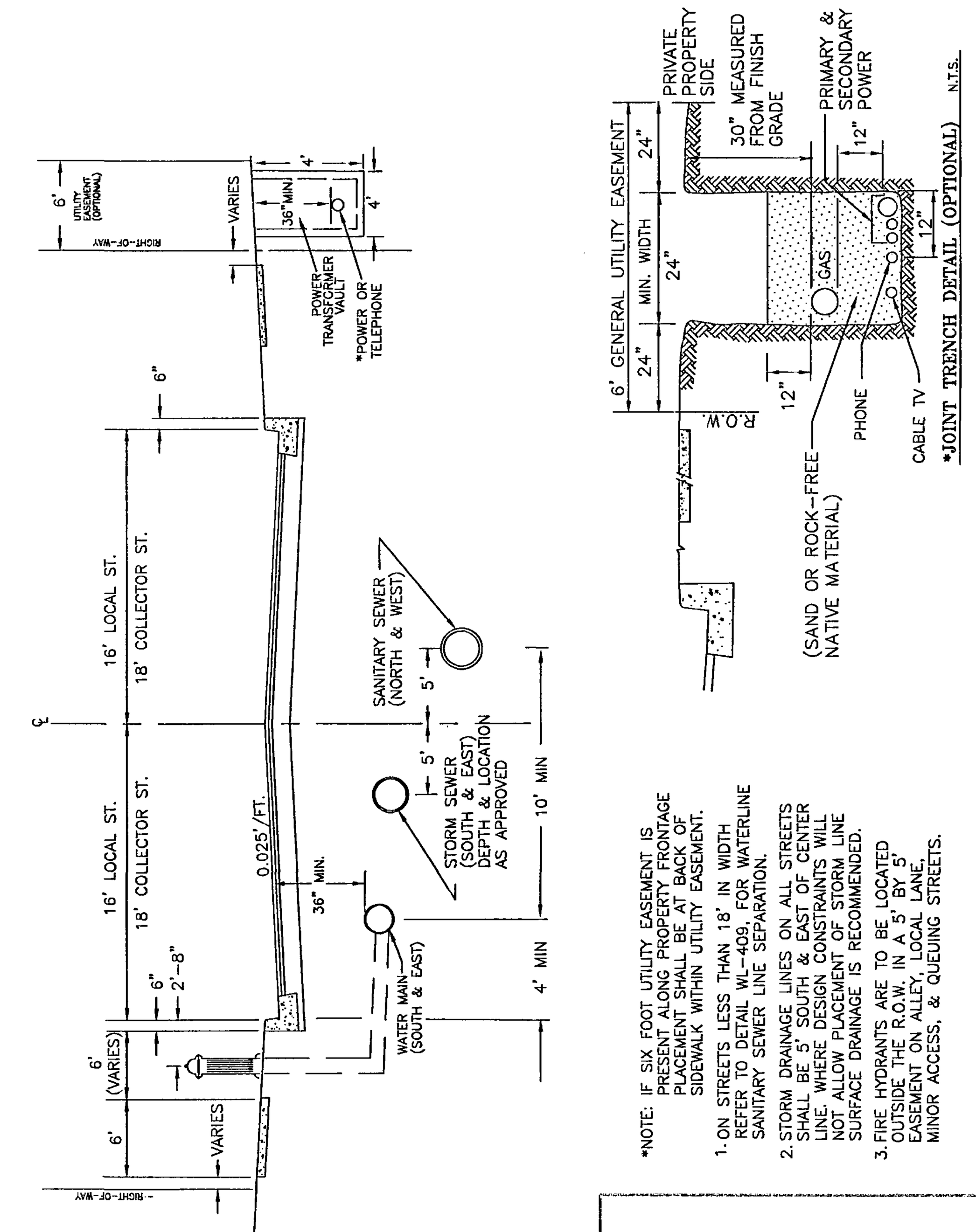

*NOTE: IF SIX FOOT UTILITY EASEMENT IS PRESENT ALONG PROPERTY FRONTAGE PLACEMENT SHALL BE AT BACK OF SIDEWALK WITHIN UTILITY EASEMENT.

1. ON STREETS LESS THAN 18' IN WIDTH REFER TO DETAIL WL-409, FOR WATERLINE SANITARY SEWER LINE SEPARATION.
2. STORM DRAINAGE LINES ON ALL STREETS SHALL BE 5' SOUTH & EAST OF CENTER LINE. WHERE DESIGN CONSTRAINTS WILL NOT ALLOW PLACEMENT OF STORM LINE SURFACE DRAINAGE IS RECOMMENDED.
3. FIRE HYDRANTS ARE TO BE LOCATED OUTSIDE THE R.O.W. IN A 5' BY 5' EASEMENT ON ALLEY, LOCAL LANE, MINOR ACCESS, & QUEUING STREETS.

Typical Utility Placement Detail

West Linn — DATE: JAN 2000 — DRAWING NO. WL-500 — FILE NO. 00-500

Typical Curbs

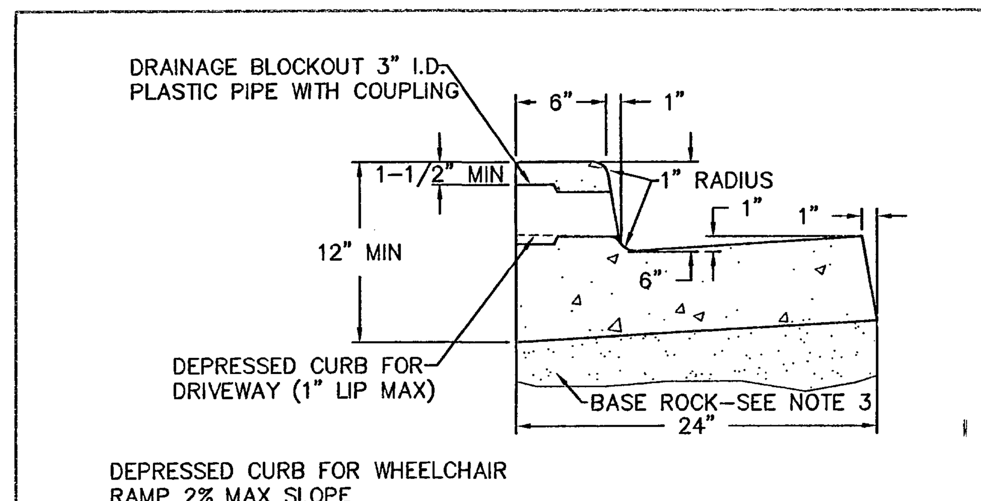

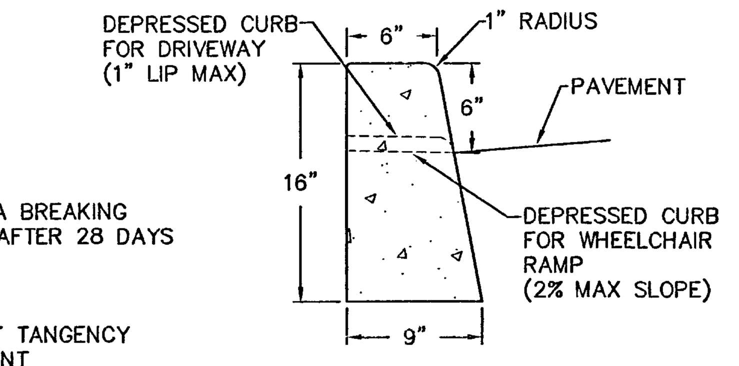

NOTES:

1. CONCRETE SHALL HAVE A BREAKING STRENGTH OF 3300 PSI AFTER 28 DAYS
2. CONTRACTION JOINTS
   A) TO BE PROVIDED
   -AT EACH POINT OF TANGENCY
   -AT EACH COLD JOINT
   -AT EACH SIDE OF INLET STRUCTURES
   -AT BOTH SIDES OF AN APPROACH
   B) SPACING TO BE NOT MORE THAN 15 FEET
   C) THE DEPTH OF THE JOINT SHALL BE AT LEAST 1/3 OF THE THICKNESS OF CONCRETE
   D) EXPANSION JOINTS SHALL NOT BE USED
3. BASE ROCK - 1-1/2"-0", 95% COMPACTION ROCK SHALL BE TO SUBGRADE OF THE STREET SECTION OR 4" IN DEPTH, WHICHEVER IS GREATER
4. DRAINAGE BLOCK - 3" DIA. PLASTIC PIPE
   A) DRAINAGE ACCESS THROUGH EXISTING CURBS SHALL BE DONE BY:
   -CORE DRILLING
   -VERTICAL SAWCUT OF CURB 18" EACH SIDE OF DRAIN AND RE-POURED TO FULL DEPTH OF CURB
5. STAMP TOP OF CURB WITH "W" AT WATER SERVICE CROSSING AND "S" AT SANITARY LATERAL CROSSING

Typical Curbs

West Linn — DATE: JAN 2000 — DRAWING NO. WL-501 — FILE NO. 00-501

Residential Driveway

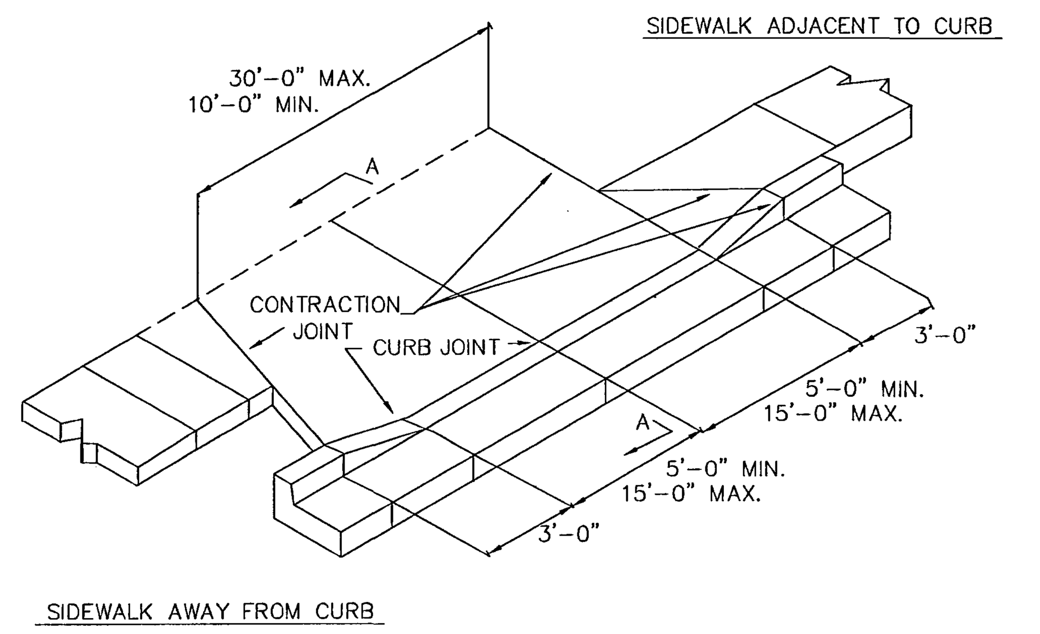

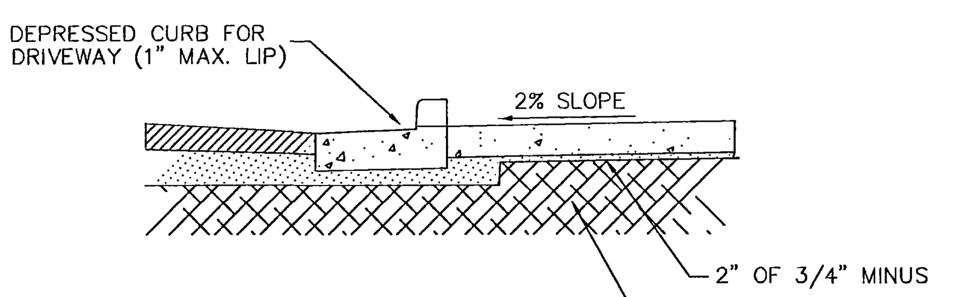

SECTION A-A

NOTES

1. CONCRETE SHALL HAVE A MINIMUM BREAKING STRENGTH OF 3300 PSI AFTER 28 DAYS, 6 SACK MIX.
2. CURB SHALL BE TROWELED JOINT WITH A MIN. 1/2" RADIUS ALONG BACK OF CURB.
3. DRIVEWAY SHALL BE A MINIMUM 6" THICK.

Residential Driveway

West Linn — DATE: JAN 2000 — DRAWING NO. WL-503 — FILE NO. 00-503

Commercial Driveway

PLAN

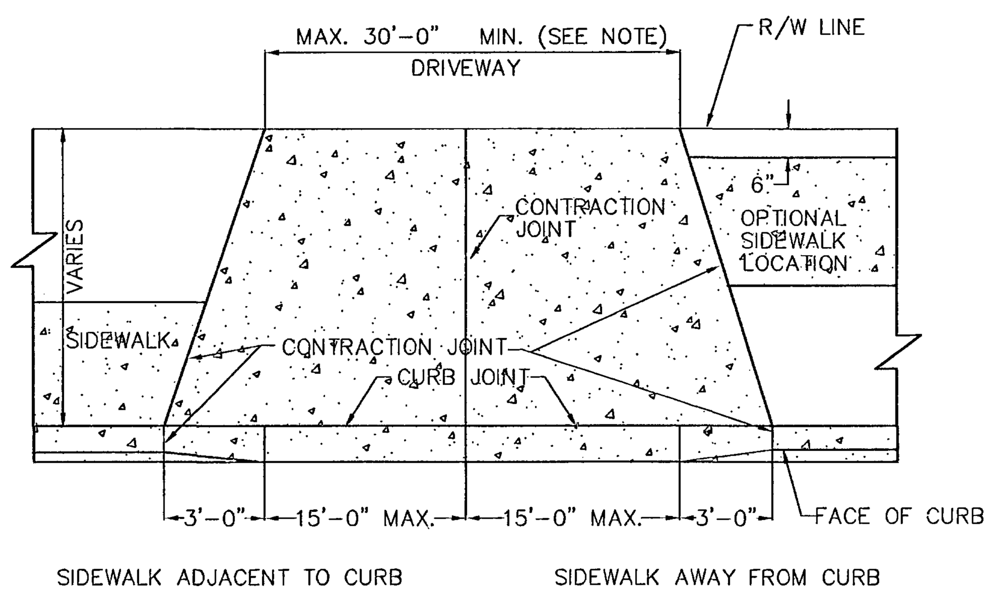

NOTE: ONE-WAY TRAFFIC - MIN. 15' DRIVEWAY
TWO-WAY TRAFFIC - MIN. 24' DRIVEWAY

ELEVATION

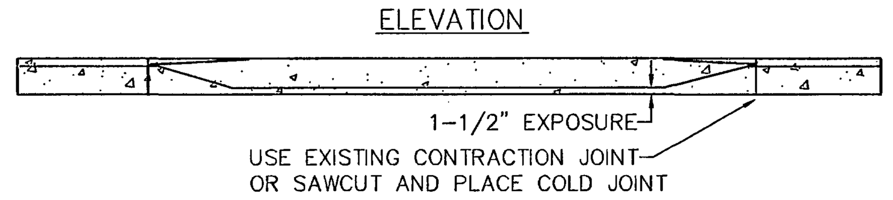

SECTION A-A

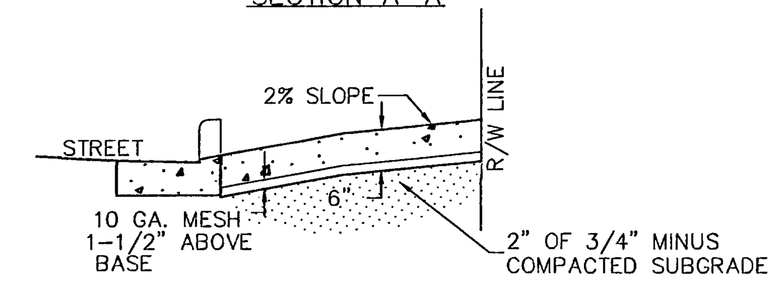

NOTES

1. CONCRETE SHALL HAVE A MINIMUM BREAKING STRENGTH OF 3300 PSI AFTER 28 DAYS, 6 SACK MIX.
2. CURB JOINT SHALL BE A TROWELED JOINT WITH A MIN. 1/2" RADIUS ALONG BACK OF CURB.
3. DRIVEWAY SHALL BE A MINIMUM 6" THICK.

Commercial Driveway

West Linn — DATE: JAN 2000 — DRAWING NO. WL-504 — FILE NO. 00-504

Single Curb Ramp

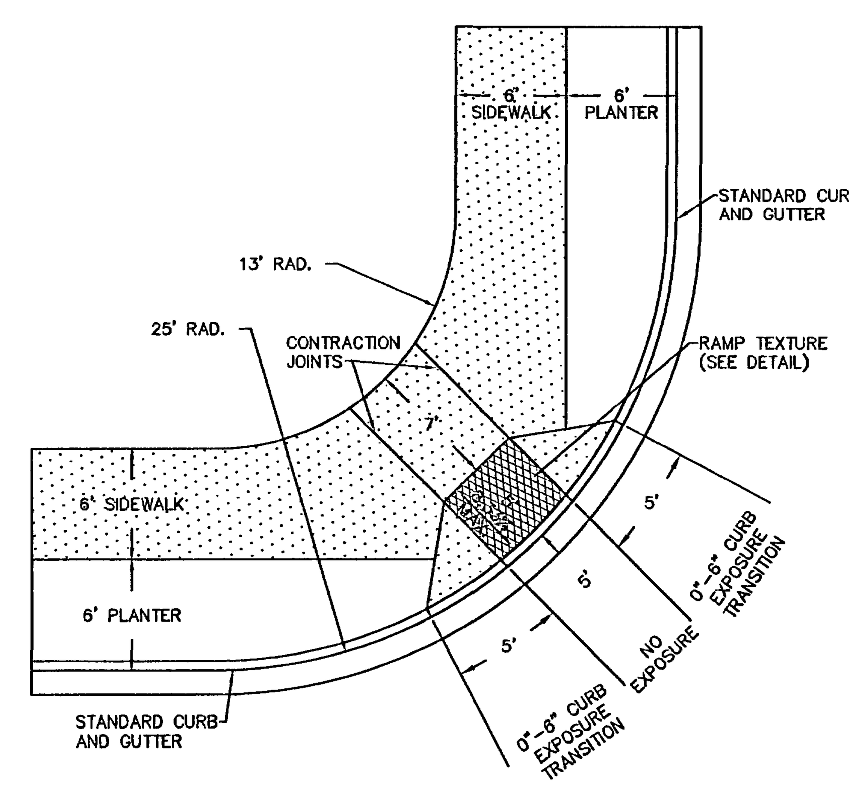

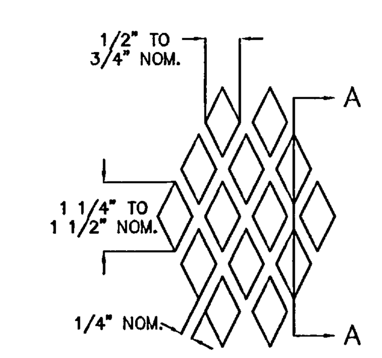

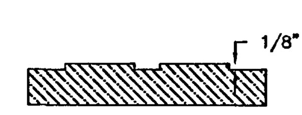

SECTION A-A

RAMP TEXTURE DETAIL

NOTES:

1. THE "AMERICANS WITH DISBILITIES ACT" (ADA) REQUIRES THAT ACCESS RAMPS TO SIDEWALKS CONFORM TO ALL FEDERAL GUIDE-LINES. EXCEPTIONS TO THE REQUIREMENTS IN THIS DRAWING MUST BE APPROVED BY THE CITY ENGINEER.
2. NO ABOVE GROUND UTILITIES ARE PERMITTED WITHIN RAMP AREA.
3. RAMP SURFACE SHALL BE TEXTURED WITH RAISED DIAMOND TEXTURE. TEXTURING SHALL BE DONE WITH AN EXPANDED METAL GRATE STAMPED INTO THE CONCRETE.
4. CONCRETE STRENGTH SHALL BE 3300 PSI.
5. PLACE CONTRACTION JOINTS AS SHOWN ABOVE.
6. WHEN EITHER OPPOSING CURB RAMP HAS AN EXISTING TWIN RAMP, USE DETAIL WL-507B.

Single Curb Ramp (For Use At Intersection of (2) Local Streets Only)

West Linn — DATE: JAN 2000 — DRAWING NO. WL-507A — FILE NO. 00-507A

Centerline Survey Monuments

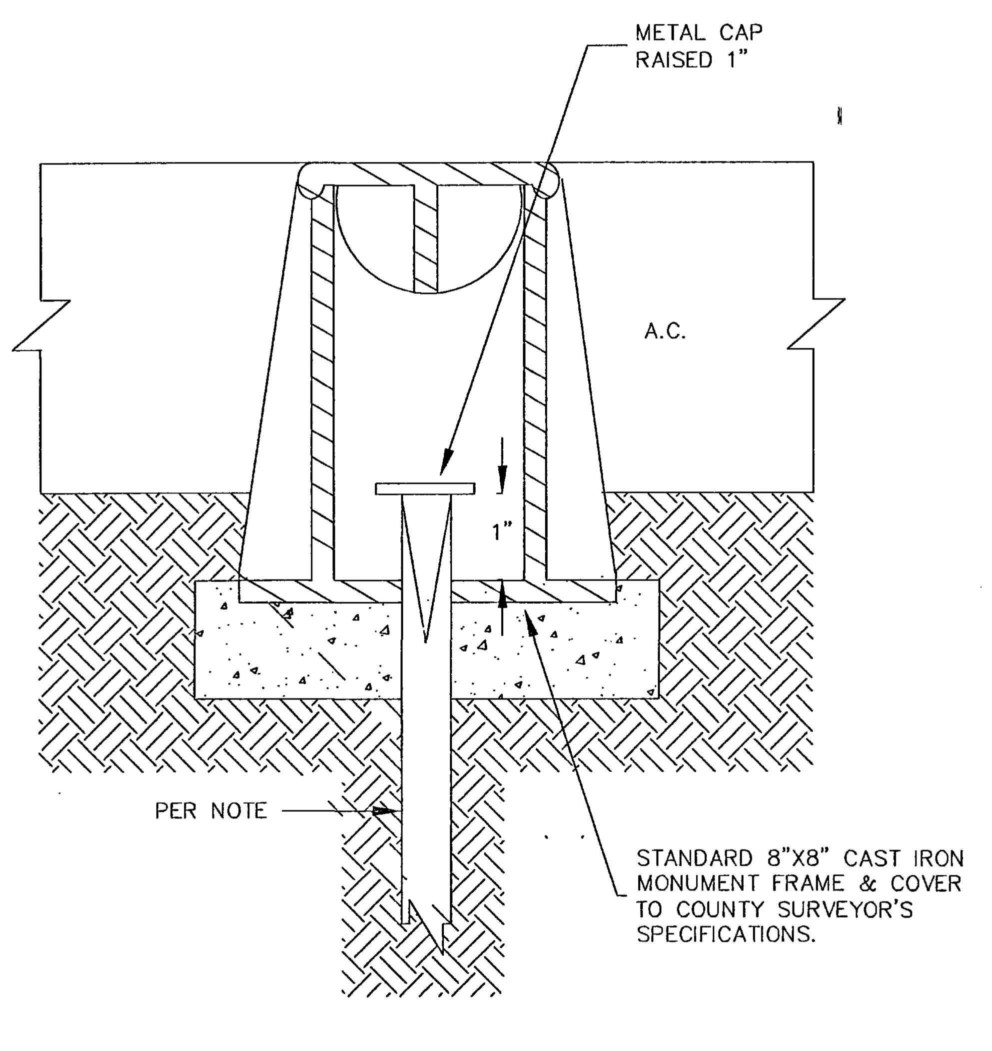

NOTES: ALL MONUMENTS SHALL USE EITHER 5/8" DIA.X 30" LONG IRON ROD OR 3/4" DIA.X 30" LONG IRON PIPE.

ALL MONUMENTS SHALL BE IN ACCORDANCE WITH ORS 209.250(4).

CONCRETE SHALL BE CLASS 3300.

FRAME AND COVER SHALL BE CAST IRON OR ALUMINUM.

COVER SHALL HAVE "MONUMENT" CAST INTO TOP.

Centerline Survey Monuments

West Linn — DATE: JAN 2000 — DRAWING NO. WL-513 — FILE NO. 00-513

AS-BUILT
DATE 5/31/05 SRH

SFA Design Group, LLC
STRUCTURAL | CIVIL | LAND USE PLANNING
9020 SW Washington Square Dr. Suite 350
Portland, Oregon 97223
p: (503) 641-8311 f: (503) 643-7905
sfadesigngroup.com

DETAIL SHEET
FIELD'S PARK

NO.	DATE	REVISION	BY
1	5/31/05	AS-BUILT	SRH

DESIGNED BY SRH DATE 12/06/04
DRAWN BY SRH DATE 12/06/04
REVIEWED BY BEF DATE 12/06/04
PROJECT NO. 105-001 REF. ____
SCALE HORZ: N/A VERT: N/A
105IDETL.DWG

SHEET 9 OF 12

PROJECT FIELDS
NO. 105-001
TYPE CONSTRUCTION

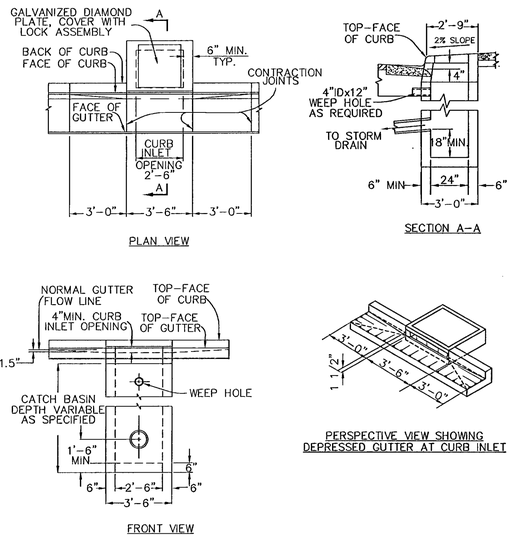

NOTES:
1. ALL FABRICATED METAL PARTS SHALL BE HOT-DIPPED GALVANIZED AFTER FABRICATION.
2. CONCRETE SHALL BE CLASS 3000.
3. CURB INLET BASE MAY BE PRECAST OR CAST-IN-PLACE.
4. FOR SLOPES OF 5% OR GREATER, USE DWG. WL-601.

Gutter Inlet
2 1/2 A

West Linn

DATE:	JAN 2000
DRAWING NO.	WL-600
FILE NO.	00-600

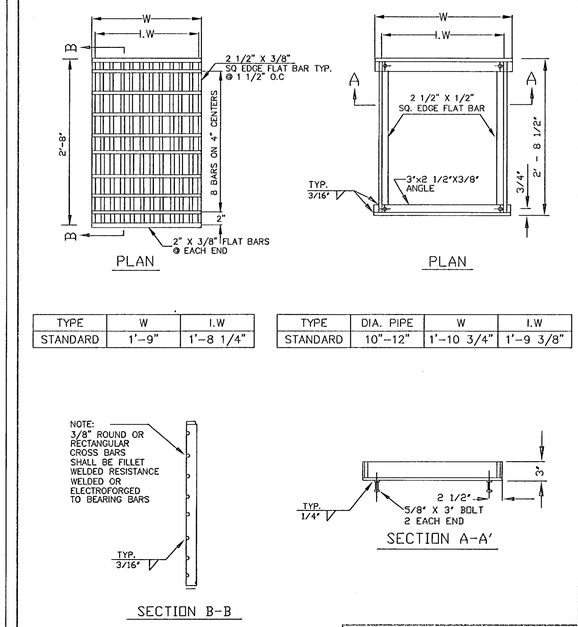

TYPE	W	I.W
STANDARD	1'-9"	1'-8 1/4"

TYPE	DIA. PIPE	W	I.W
STANDARD	10"-12"	1'-10 3/4"	1'-9 3/8"

NOTE:
USE VERTICAL BEADS IN CORNERS. FILLET WELD JOINT ON BOTTOM OF FRAME. GRATE MUST REST FLAT ON FRAME SURFACE.

Frame & Grate
for Gutter & Curb Inlets

West Linn

DATE:	JAN 2000
DRAWING NO.	WL-602A
FILE NO.	00-602A

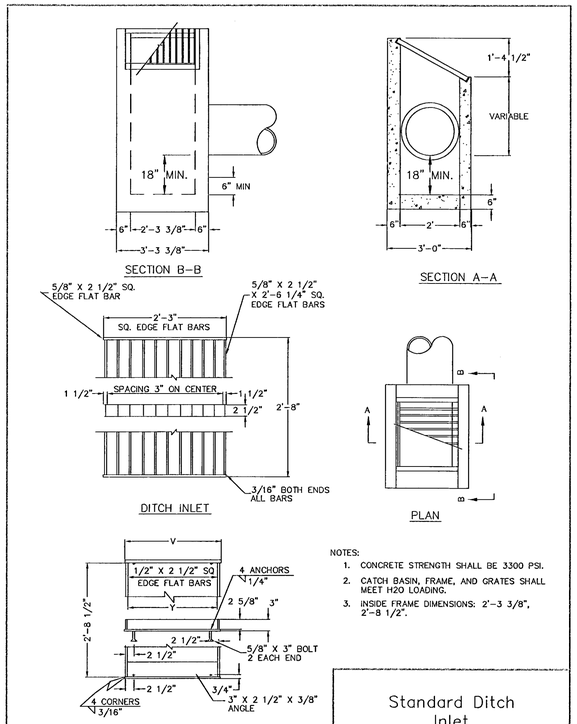

NOTES:
1. CONCRETE STRENGTH SHALL BE 3300 PSI.
2. CATCH BASIN, FRAME, AND GRATES SHALL MEET H20 LOADING.
3. INSIDE FRAME DIMENSIONS: 2'-3 3/8", 2'-8 1/2".

NOTE:
3/8" CROSS BARS SHALL BE FLUSH WITH THE GRATE SURFACE AND MAY BE FILLET WELDED, RESISTANCE WELDED OR ELECTROFORGED TO BEARING BARS.

DITCH INLET FRAME

INLET TYPE	V	Y	Y1	NO. OF BARS	TYPE
D	2'-4 3/4"	2'-3 3/8"	2'-3"	9	1

Standard Ditch
Inlet

West Linn

DATE:	JAN 2000
DRAWING NO.	WL-603
FILE NO.	00-603

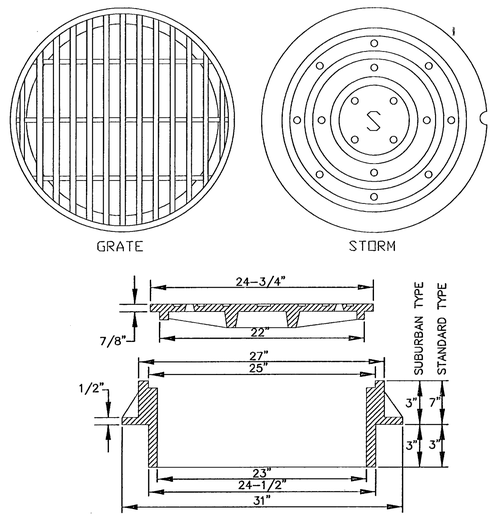

NOTES:
1. USE SUBURBAN TYPE ONLY IN NON-TRAFFIC AREAS, AND ONLY WITH APPROVAL BY THE CITY.
2. COVER AND FRAME SHALL BE GRAY CAST IRON ASTM A-48 CLASS 30.
3. COVER AND FRAME TO BE MACHINED TO A TRUE BEARING ALL AROUND.
4. NOTCH LID FOR LIFTING HOOK.
5. OPEN GRATES REQUIRE APPROVAL BY CITY, AND MUST BE BICYCLE SAFE IF USED IN TRAFFIC AREAS.

SUBURBAN AND STANDARD
MANHOLE FRAME AND COVER

Manhole Covers

West Linn

DATE:	JAN 2000
DRAWING NO.	WL-605
FILE NO.	00-605

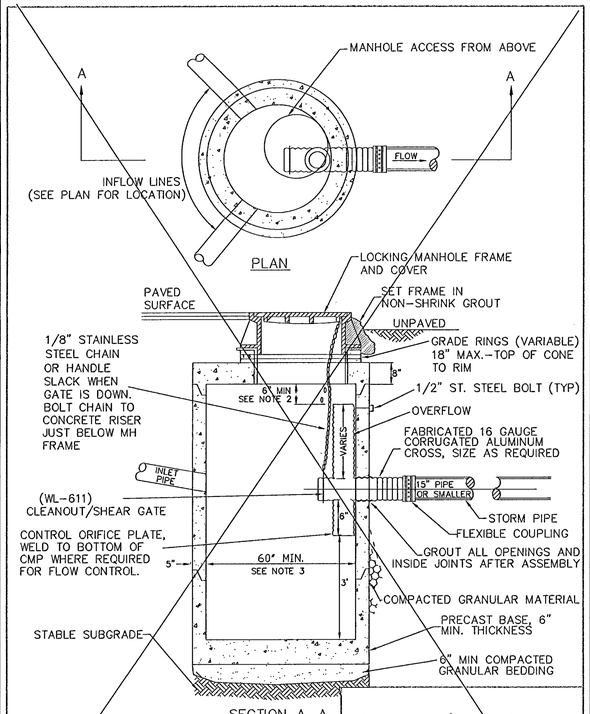

NOTES:
1. ALL PRECAST SECTIONS SHALL CONFORM TO THE REQUIREMENTS OF ASTM C-478.
2. DISTANCE FROM TOP OF OVERFLOW TO MH RIM SHALL BE BASED ON OVERFLOW CAPACITY CALC'S BY DESIGN ENGINEER. ASSUME ORIFICE CONTROL.
3. 22" MINIMUM DIA. MANHOLE REQUIRED FOR OUTLET OR INLET > 21".
4. NO STEPS REQUIRED

Pollution / Flow Control
Manhole

West Linn

DATE:	JAN 2000
DRAWING NO.	WL-607
FILE NO.	00-607

NOTES:
1. NEOPRENE RUBBER GASKET REQUIRED BETWEEN GATE FLANGE AND CONCRETE CATCH BASIN.
2. CLEANOUT/SHEAR GATE TO HAVE LIFT HANDLE (SEE WL-611) ATTACHED WITH GALVANIZED CHAIN TO TOP OF CATCH BASIN.
3. FLANGE MOUNTING BOLTS SHALL BE 3/8" DIA STAINLESS STEEL.

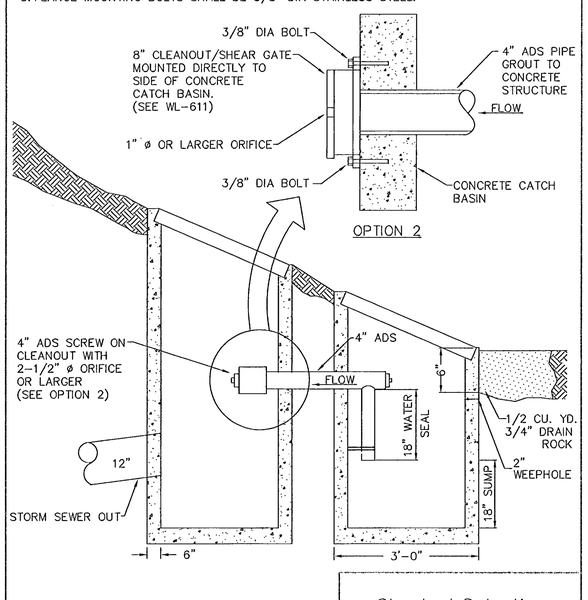

Standard Detention
Pond Outlet

West Linn

DATE:	JAN 2000
DRAWING NO.	WL-610
FILE NO.	00-610

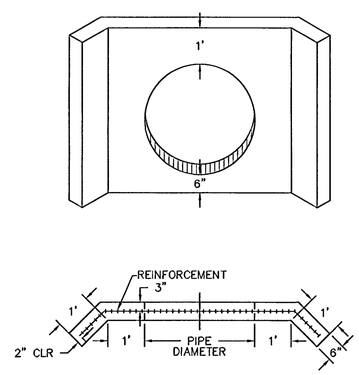

NOTES:
1. USE CONCRETE HAVING A 28 DAY DESIGN STRENGTH OF 3300 PSI.
2. OUTLET WING WALL SHALL BE USED FOR ALL OUTFALL PIPES FROM 10" TO 36".
3. THIS DETAIL REPRESENTS THE MINIMUM REQUIREMENT. THE NEED FOR ADDITIONAL STEEL, A FOOTING AND DRAINAGE BEHIND THE WALL SHALL BE INVESTIGATED BY THE DESIGN ENGINEER.
4. FOR PIPES LARGER THAN 33" OR MULTIPLE PIPE OUTLETS, USE DETAIL WL-612.
5. CONCRETE REINFORCEMENT SHALL CONSIST OF:
   A) ADDING A POLY-FIBER MESH TO THE CONCRETE MIX OR
   B) USE (2) #4 BARS ABOVE AND BELOW PIPE AND #4 BARS AT 6" O.C. VERTICALLY.

Outlet Headwall
(For Outlet Pipes of
10" to 33")

West Linn

DATE:	JAN 2000
DRAWING NO.	WL-613
FILE NO.	00-613

D = PIPE DIAMETER
W = BOTTOM WIDTH OF CHANNEL
P = WETTED PERIMETER OF CHANNEL

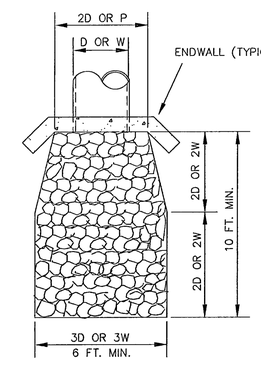

DESIGN VELOCITY FT./SEC	ROCK CLASSIFICATION BY WEIGHT
6 - 10	200 LBS.
10 - 12	1/4 TON
12 - 14	1/2 TON
14 - 16	1 TON
16 - 18	2 TON

SELECTION OF RIP RAP
(SEE NOTE 1)

NOTES:
1. DIMENSIONS FOR RIP RAP APPLY TO FLOWS
   < 2 CFS RIP RAP FOR FLOWS
   > 2 CFS MUST BE DESIGNED BY AN ENGINEER
   FLOWS > 20 FPS SHALL USE ENERGY DISSIPATOR
2. TYPE OF RIP RAP
   A. REGULAR QUARRY STONE CLASS 50-200
   B. COBBLESTONE
   C. CONCRETE (ONLY ALLOWED UPON APPROVAL OF THE DISTRICT)
3. PLACEMENT
   A. MINIMUM DEPTH = 1 1/2 TIMES AVERAGE STONE SIZE
   B. ROCKS SHALL BE PLACED TO PROVIDE A MINIMUM OF VOIDS.
   C. SURFACE ROCKS OR CONCRETE SHALL PROTRUDE AT LEAST 1/2 THEIR VERTICAL DIMENSION.
   D. RIP RAP IS TO BE PLACED OVER A NATURAL BEDDING, OR IT MAY BE GROUTED OR PLACED OVER A GRAVEL BEDDING AS REQUIRED BY THE CITY.

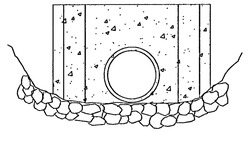

AS-BUILT
DATE 5/31/05 SRH

Storm Sewer Outfall

West Linn

DATE:	JAN 2000
DRAWING NO.	WL-614
FILE NO.	00-614

SFA Design Group, LLC
STRUCTURAL | CIVIL | LAND USE PLANNING
9020 SW Washington Square Dr. Suite 350
Portland, Oregon 97223
p: (503) 641-8311 f: (503) 643-7905
sfadesigngroup.com

DETAIL SHEET
FIELD'S PARK

NO.	DATE	REVISION	BY
1	5/31/05	AS-BUILT	SRH

DESIGNED BY SRH DATE 12/06/04
DRAWN BY SRH DATE 12/06/04
REVIEWED BY BEF DATE 12/06/04
PROJECT NO. 105-001 REF.
SCALE HORZ: N/A VERT: N/A
105DETL.DWG

SHEET 10 OF 12

PROJECT FIELDS
NO. 105-001
TYPE CONSTRUCTION

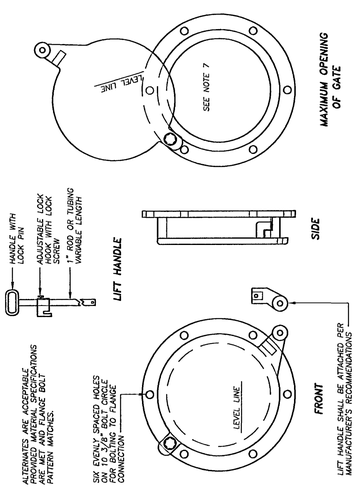

CLEANOUT/SHEAR GATE
SCALE:NTS

NOTES:
1. CLEANOUT/SHEAR GATE SHALL BE ALUMINUM ALLOY PER ASTM B-26-2G-32a OR CAST IRON ASTM A48 CLASS 30B AS REQUIRED.
2. LIFT HANDLE EITHER SOLID OR TUBING WITH ADJUSTABLE HOOK AS REQUIRED.
3. NEOPRENE RUBBER GASKET REQUIRED BETWEEN RISER MOUNTING FLANGE AND GATE FLANGE.
4. MATING SURFACES OF LID AND BODY TO BE MACHINED FOR PROPER FIT.
5. FLANGE MOUNTING BOLTS SHALL BE 3/8" DIAMETER STAINLESS STEEL.
6. ALTERNATE CLEANOUT/SHEAR GATES TO THE DESIGN SHOWN ARE ACCEPTABLE PROVIDED THEY MEET THE MATERIAL SPECIFICATIONS ABOVE AND HAVE A SIX BOLT, 10 3/8" BOLT CIRCLE FOR BOLTING THE FLANGE CONNECTION.
7. GATE SHALL NOT OPEN BEYOND THE CLEAR OPENING BY LIMITED HINGE MOVEMENT, STOP TAB, OR SOME OTHER DEVICE.

Cleanout / Shear Gate

West Linn

DATE:	JAN 2000
DRAWING NO.	WL-611
FILE NO.	00-611

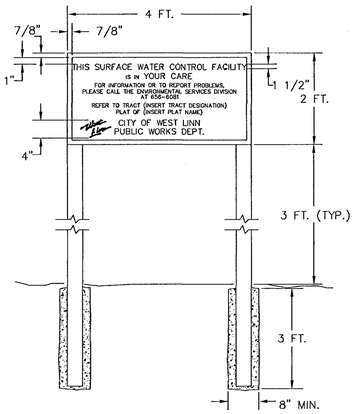

SPECIFICATIONS:

SIZE: 48" BY 24"
MATERIAL: GRADE "B" OR BETTER EXTERIOR PLYWOOD
PAINT: FACE – 3 COATS OUTDOOR ENAMEL (SPRAYED).
BACK – 1 COAT OUTDOOR ENAMEL (SPRAYED).
LETTERING: SILK SCREEN ENAMEL WHERE POSSIBLE, OR HAND PAINTED ENAMELS.
COLORS: BLACK AND WHITE. WHITE BACKGROUND, LETTERING AND BORDER IN BLACK
TYPE FACE: HELVETICA. 1 1/2" TALL WITH 7/8" SPACING BETWEEN LETTERS AND OUTER BORDER. OUTER BORDER 1/2" WIDTH
INSTALLATION: SECURED TO CHAIN LINK FENCE IF AVAILABLE, OTHERWISE INSTALL ON TWO 8 FT. LONG 4" X 4" POSTS, PRESSURE TREATED, INSTALLED IN 3 FT. DEEP CONCRETE FILLED POST HOLES (8" MIN. DIA.)

Surface Water Facility Sign

West Linn

DATE:	JAN 2000
DRAWING NO.	WL-615
FILE NO.	00-615

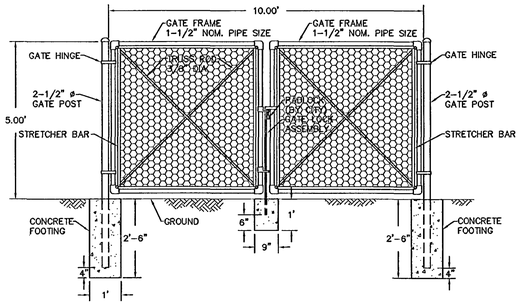

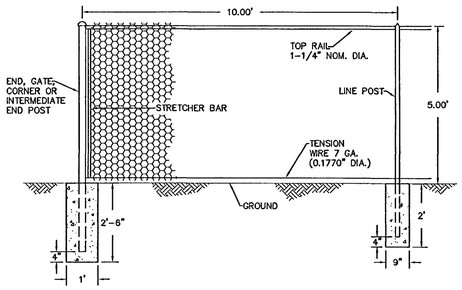

NOTES:
1. BLACK POWDER COATING ON ALL HARDWARE AND ACCESSORIES IS REQUIRED.
2. ALL MATERIAL AND WORKMANSHIP SHALL BE IN ACCORDANCE WITH THE CURRENT STATE OF OREGON STANDARD SPECIFICATIONS FOR HIGHWAY CONSTRUCTION.

Surface Water Facility Fence

West Linn

DATE:	JAN 2000
DRAWING NO.	WL-616
FILE NO.	00-616

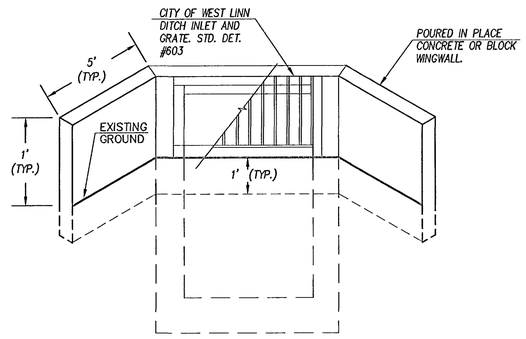

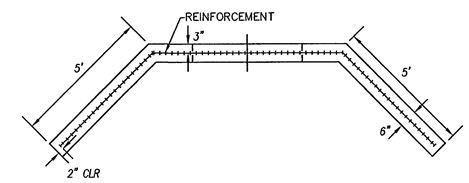

NOTES:
1. USE CONCRETE HAVING A 28 DAY DESIGN STRENGTH OF 3300 PSI.
2. CONCRETE REINFORCEMENT SHALL CONSIST OF:
   A) ADDING A POLY-FIBER MESH TO THE CONCRETE MIX OR
   B) USE (2) #4 BARS ABOVE AND BELOW PIPE AND #4 BARS AT 6" O.C. VERTICALLY.
3. BLOCK WALL MAY BE SUBSTITUTED FOR CONCRETE WINGWALL. GEOFABRIC SHALL BE KEYED IN BEHIND WALLS.

AS-BUILT
DATE 5/31/05 SRH

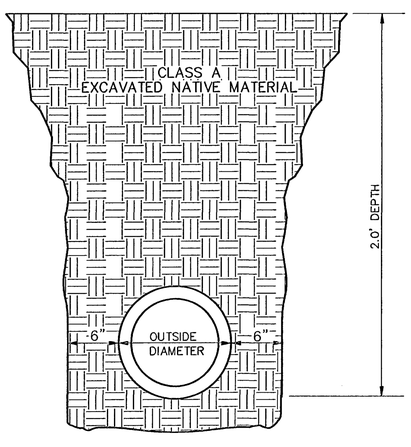

OFFSITE STORM DRAIN TRENCH DETAIL
SCALE:NTS

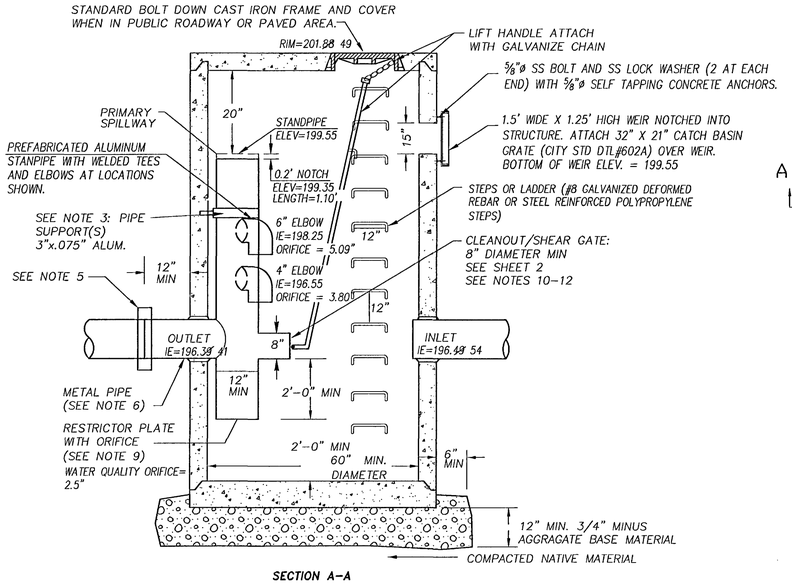

SECTION A-A

FLOW CONTROL MANHOLE
SCALE:NTS

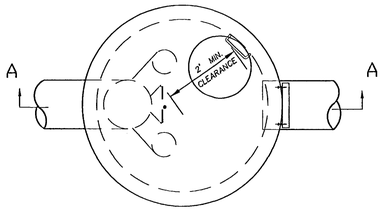

PLAN VIEW

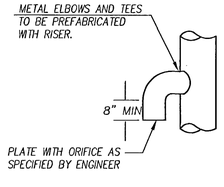

ELBOW DETAIL

NOTES

1. EXCEPT AS SHOWN OR NOTED, UNITS SHALL BE CONSTRUCTED IN ACCORDANCE WITH THE STANDARD SPECIFICATIONS FOR PUBLIC WORKS CONSTRUCTION.
2. FLAT TOP SHALL BE H-20 LOAD RATED WITH NO COVER.
3. PIPE SUPPORTS AND RESTRICTOR/SEPARATOR SHALL BE OF THE SAME MATERIAL, AND BE ANCHORED AT 3' MAX SPACING BY 5/8" DIA. STAINLESS STEEL EXPANSION BOLTS OR EMBEDDED 2" IN WALL.
4. THE RESTRICTOR/SEPARATOR SHALL BE FABRICATED FROM .060" (MM) ALUMINUM, IN ACCORDANCE WITH THE APPLICABLE SECTIONS OF AASHTO M 36, M 196, M197, AND M 274.
5. OUTLET SHALL BE CONNECTED TO CULVERT OR SEWER PIPE WITH A STANDARD COUPLING BAND FOR CORRUGATED METAL PIPE, OR GROUTED INTO THE BELL OF CONCRETE PIPE.
6. THE VERTICAL RISER STEM OF THE RESTRICTOR/SEPARATOR SHALL BE THE SAME DIAMETER AS THE HORIZONTAL OUTLET PIPE, WITH AN 12" MINIMUM DIAMTER.
7. FRAME AND LADDER OR STEPS ARE TO BE OFFSET SO THAT:
   A. CLEANOUT GATE IS VISIBLE FROM TOP.
   B. CLIMB-DOWN SPACE IS CLEAR OF RISER AND GATE.
   C. FRAME IS CLEAR OF CURB (IF ANY EXISTS).
8. MULTI-ORIFICE ELBOWS MAY BE LOCATED AS SHOWN OR ALL ON ONE SIDE OF RISER TO ASSURE LADDER CLEARANCE. SIZE OF ELBOWS AND PLACEMENT TO BE DETERMINED BY THE ENGINEER.
9. RESTRICTOR PLATE WITH ORIFICE AS SPECIFIED IN THE CONTRACT PLANS. SPECIFIED OPENING TO BE CUT ROUND AND SMOOTH.
10. CLEANOUT/SHEAR GATE: ALUMINUM ALLOY PER ASTM B-26-2G-32a OR CAST IRON ASTM A48 CLASS 30B AS REQUIRED. LIFT HANDLE EITHER SOLID OR TUBING WITH ADJUSTABLE HOOK AS REQUIRED. NEOPRENE RUBBER GASKET REQUIRED BETWEEN RISER MOUNTING FLANGE AND GATE FLANGE. MATING SURFACES OF LID AND BODY TO BE MACHINED FOR PROPER FIT. FLANGE MOUNTING BOLTS SHALL BE 3/8" DIA STAINLESS
11. ALTERNATE CLEANOUT/SHEAR GATES TO THE DESIGN SHOWN ON THIS SHEET ARE ACCEPTABLE, PROVIDED THEY MEET THE MATERIAL SPECIFICATIONS ABOVE AND HAVE A SIX BOLT, 10 3/8" BOLT CIRCLE FOR BOLTING THE FLANGE CONNECTION.
12. GATE SHALL NOT OPEN BEYOND THE CLEAR OPENING BY LIMITED HINGE MOVEMENT, STOP TAB, OR SOME OTHER DEVICE.
13. PRECAST CONCRETE MANHOLE CONSTRUCTED IN ACCORDANCE WITH ASTM C478.
14. SEE THIS SHEET FOR DETAILS ON ELBOW AND FOR PLAN VIEW.

SFA Design Group, LLC
STRUCTURAL | CIVIL | LAND USE PLANNING
9020 SW Washington Square Dr. Suite 350
Portland, Oregon 97223
p: (503) 641-8311 f: (503) 643-7905
sfadesigngroup.com

DETAIL SHEET
FIELD'S PARK

REGISTERED PROFESSIONAL ENGINEER CS-6427PE OREGON EXPIRES MAR. 12, 2006 BRENT E. FLETCHER
10/24/05
VALID THROUGH 12-31-05

NO.	DATE	REVISION	BY
1	5/31/05	AS-BUILT	SRH

DESIGNED BY SRH DATE 12/06/04
DRAWN BY SRH DATE 12/06/04
REVIEWED BY BEF DATE 12/06/04
PROJECT NO. 105-001 REF.
SCALE HORZ: N/A VERT: N/A
105DETLDWG

SHEET 11 OF 12

PROJECT FIELDS
NO. 105-001
TYPE CONSTRUCTION

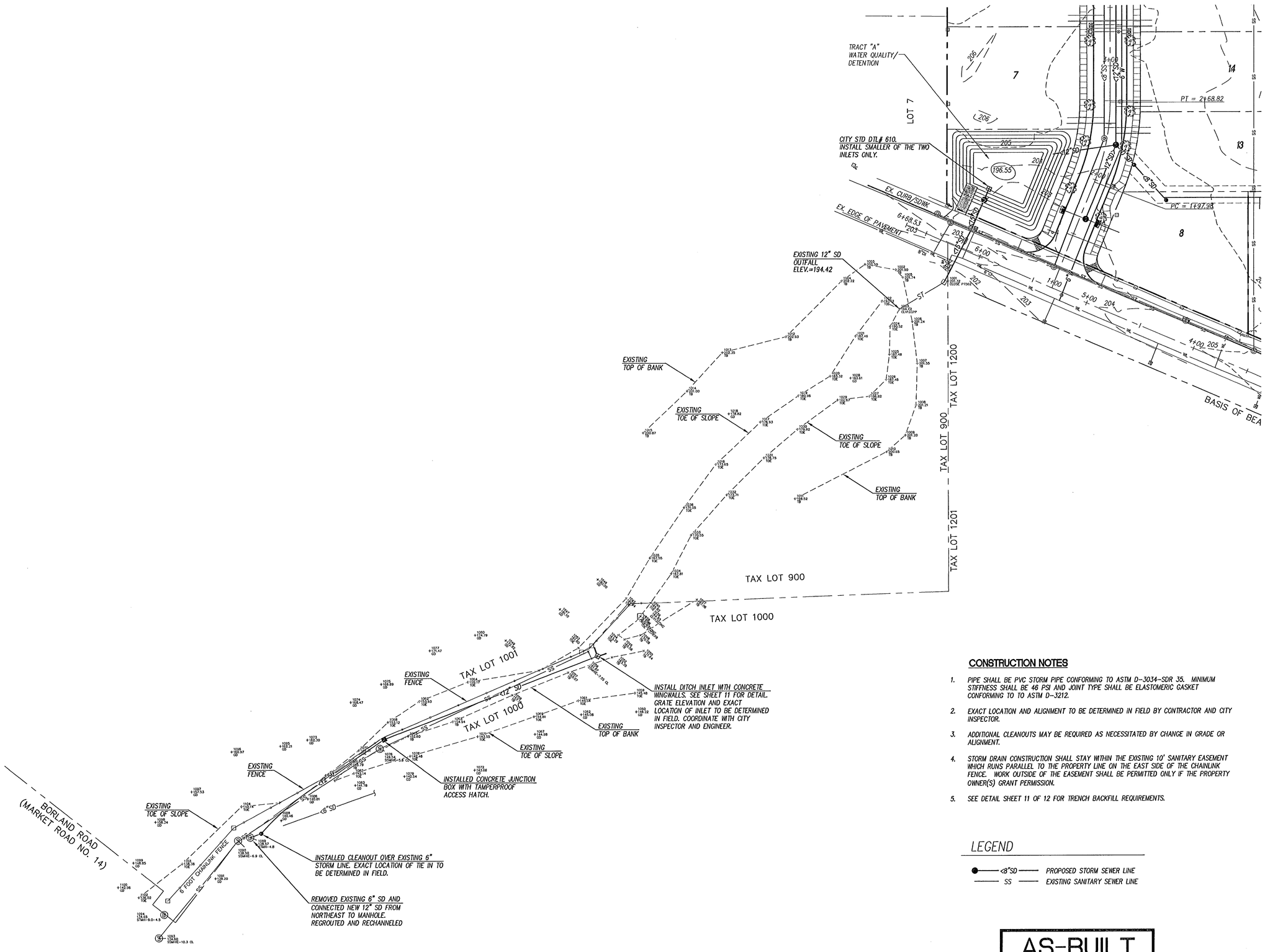

CONSTRUCTION NOTES

1. PIPE SHALL BE PVC STORM PIPE CONFORMING TO ASTM D-3034-SDR 35. MINIMUM STIFFNESS SHALL BE 46 PSI AND JOINT TYPE SHALL BE ELASTOMERIC GASKET CONFORMING TO TO ASTM D-3212.
2. EXACT LOCATION AND ALIGNMENT TO BE DETERMINED IN FIELD BY CONTRACTOR AND CITY INSPECTOR.
3. ADDITIONAL CLEANOUTS MAY BE REQUIRED AS NECESSITATED BY CHANGE IN GRADE OR ALIGNMENT.
4. STORM DRAIN CONSTRUCTION SHALL STAY WITHIN THE EXISTING 10' SANITARY EASEMENT WHICH RUNS PARALLEL TO THE PROPERTY LINE ON THE EAST SIDE OF THE CHAINLINK FENCE. WORK OUTSIDE OF THE EASEMENT SHALL BE PERMITTED ONLY IF THE PROPERTY OWNER(S) GRANT PERMISSION.
5. SEE DETAIL SHEET 11 OF 12 FOR TRENCH BACKFILL REQUIREMENTS.

LEGEND

<8"SD — PROPOSED STORM SEWER LINE
SS — EXISTING SANITARY SEWER LINE

AS-BUILT
DATE 5/31/05 SRH

NORTH

GRAPHIC SCALE
40 0 20 40 80 160
(IN FEET)
1 inch = 40 ft.

SFA Design Group, LLC
STRUCTURAL | CIVIL | LAND USE PLANNING
9020 SW Washington Square Dr. Suite 350
Portland, Oregon 97223
p: (503) 641-8311 f: (503) 643-7905
sfadesigngroup.com

OFFSITE STORM PLAN
FIELD'S PARK

REGISTERED PROFESSIONAL ENGINEER
OREGON
BREWIT E. HOLT
VALID THROUGH 12-31-05
10/24/05

NO.	DATE	REVISION	BY
1	5/31/05	AS-BUILT	SRH

DESIGNED BY SRH DATE 12/06/04
DRAWN BY SRH DATE 12/06/04
REVIEWED BY BEF DATE 12/06/04
PROJECT NO. 105-001 REF. ____
SCALE HORZ.1"40' VERT.1"=4'
105STRM_OFF.DWG

SHEET 12 OF 12

PROJECT FIELDS
NO. 105-001
TYPE CONSTRUCTION

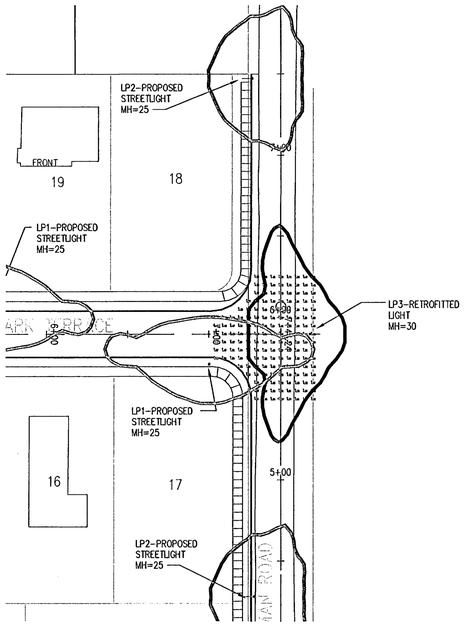

Fields Drive - Ostman Rd. Intersection

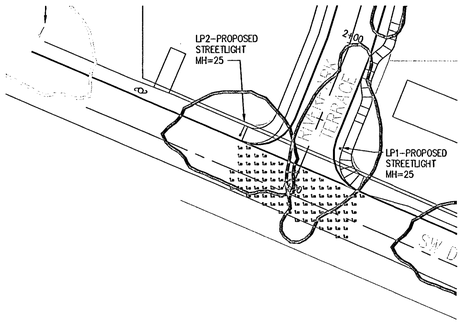

Numeric Summary							
Project: Intersections							
Label	CalcType	Units	Avg	Max	Min	Avg/Min	Max/Min
Ostman-Fields	Illuminance	Fc	1.06	3.31	0.25	4.24	13.24
Dollar-Fields	Illuminance	Fc	0.67	2.41	0.19	3.53	12.68

Fields Drive - Dollar St. Intersection

APPROVED FOR CONSTRUCTION BY
CITY OF WEST LINN

This approval is only for general conformance with the design concept and general compliance with applicable codes and requirements and shall not be construed as relieving the Design Engineer of full responsibility for accuracy and completeness of the drawings.

DATE 3/1/2005 BY

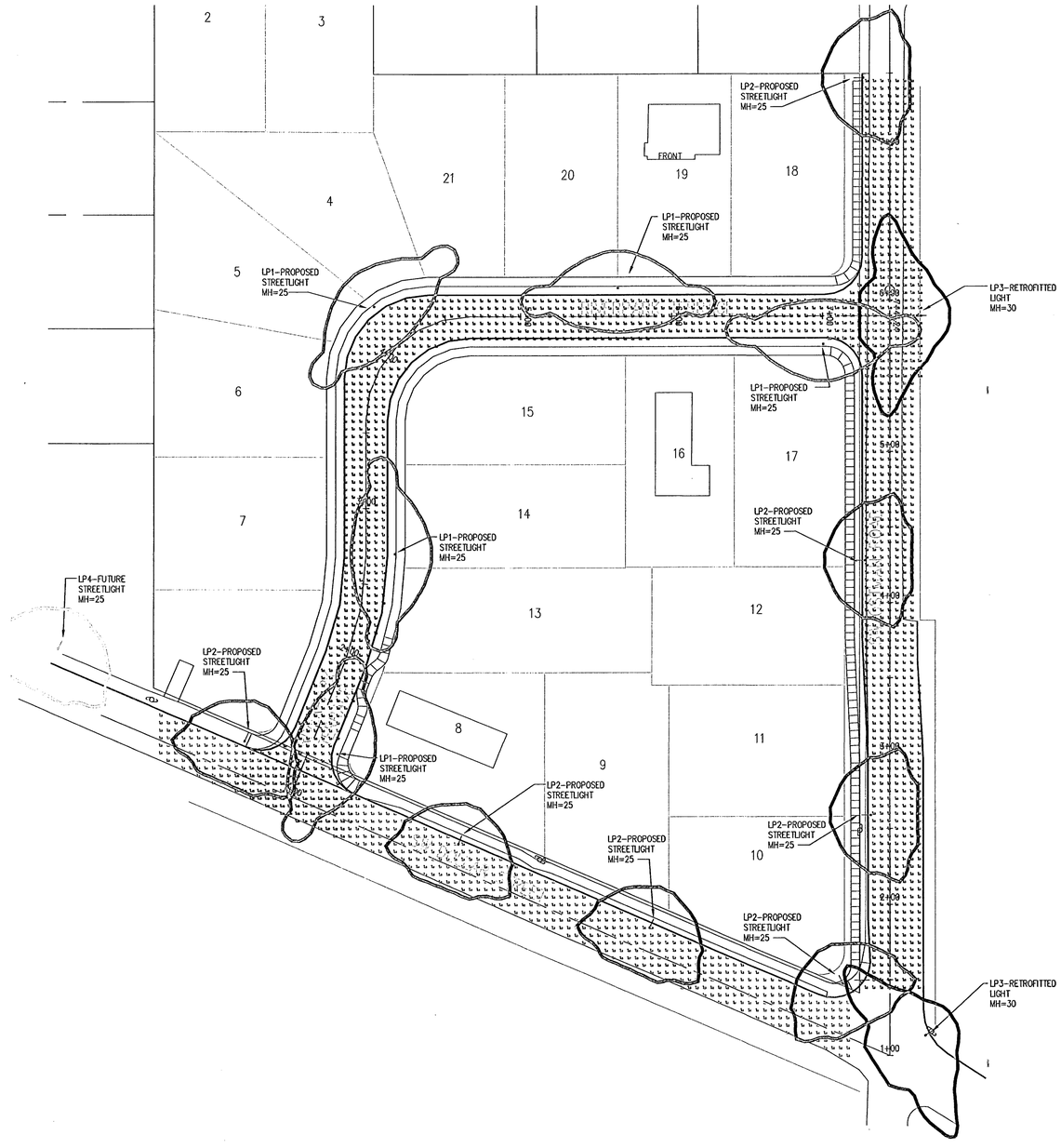

Luminaire Schedule							
Project: All Projects							
Qty	Label	Watts	Lumens	Description	Arm	Arrangement	LLF
5	LP1-Proposed Streetlight	100	9500	HPS, bronze 'Shoebox' style luminaire mounted on 25' bronze fiberglass pole	0.667	SINGLE	0.690
7	LP2-Proposed Streetlight	100	9500	HPS, 'Cobra' style, flat lens luminaire mounted on 25' bronze fiberglass pole	6	SINGLE	0.690
2	LP3-Existing Streetlight	100	9500	HPS, 'Cobra' style, drop lens luminaire mounted 25' on a PGE power pole	6	SINGLE	0.690
1	LP4-Future Streetlight	100	9500	HPS, 'Cobra' style, flat lens luminaire mounted on 25' bronze fiberglass pole	6	SINGLE	0.690

Numeric Summary							
Project: Field's Park							
Label	CalcType	Units	Avg	Max	Min	Avg/Min	Max/Min
SW Dollar St	Illuminance	Fc	0.53	2.6	0.1	5.30	26.00
Fields Drive	Illuminance	Fc	0.47	2.3	0.1	4.70	23.00
SW Ostman Road	Illuminance	Fc	0.43	2.6	0.1	4.30	26.00

AS BUILT

Field's Park - Street Lighting Design

Scale: 1" = 40'-0"

GRAPHIC SCALE

40 0 20 40 80 160

(IN FEET)
1 inch = 40 ft.

Northstar Electrical Contractors
19450 S.W. Cipole Road, Suite 107
Tualatin, Oregon 97062-7111
Phone 503-612-0840
Fax 503-612-0891
Email info@NorthStarElect.com

Project: Field's Park
Designed by: Douglas B. Sedivy
Checked by:
Date: March 23, 2005

DWG. NO
EL1

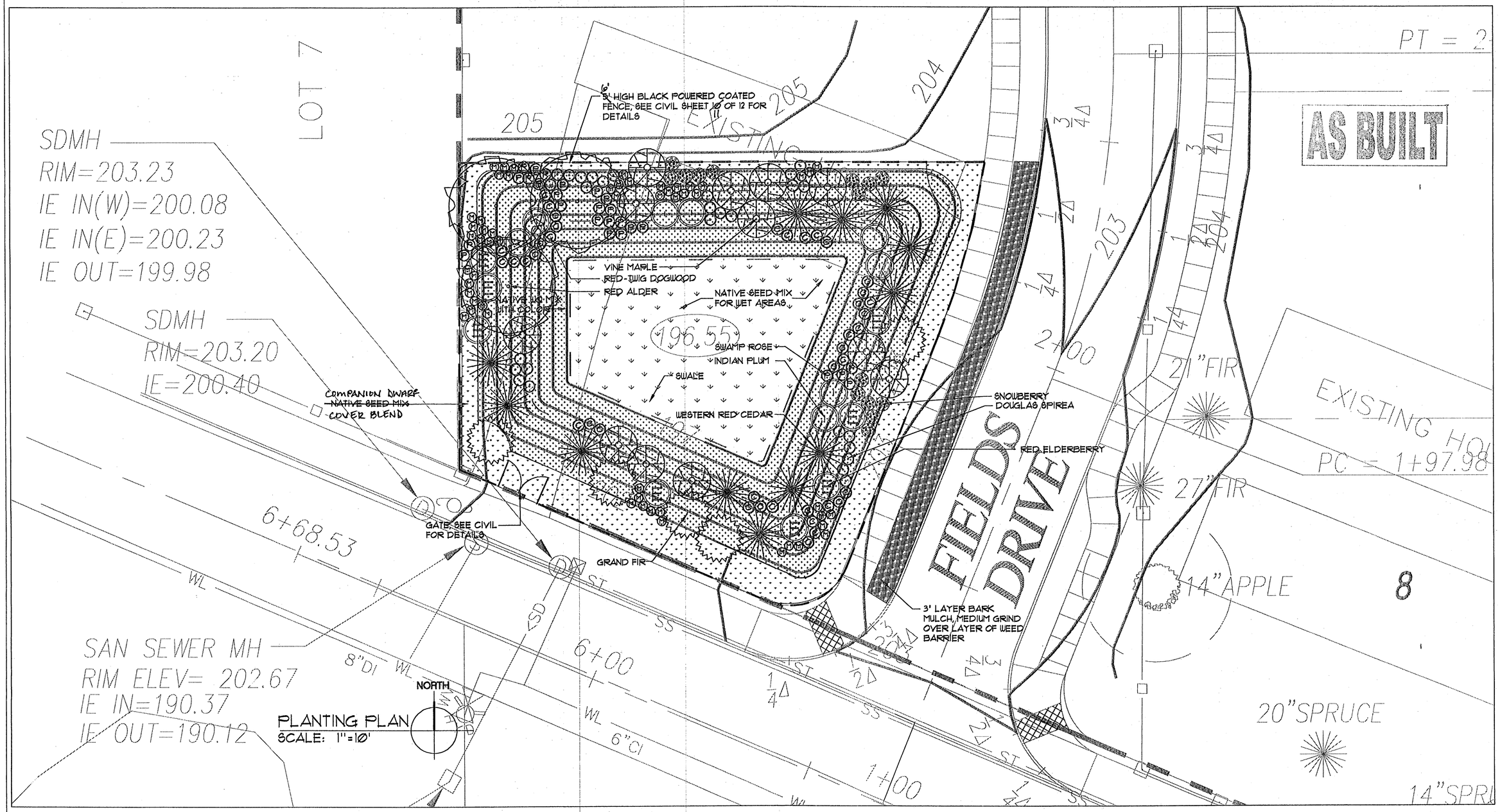

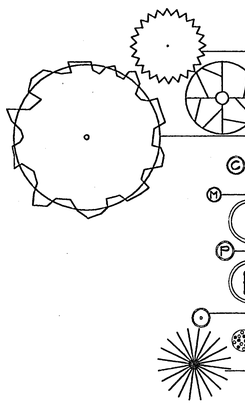

PLANT LIST

	SCIENTIFIC NAME	COMMON NAME	COND.	SPACING
5	ABIES GRANDIS	GRAND FIR	3'-4' CONT.	AS SHOWN
12	ACER CIRCINATUM	VINE MAPLE	2'-3' CONT.	AS SHOWN
3	ALNUS RUBRA	RED ALDER	3'-4' CONT.	AS SHOWN
C 40	CORNUS SERICEA	RED TWIG DOGWOOD	1 GAL	30" O.C.
M 55	MAHONIA AQUIFOLIUM	OREGON GRAPE	1 GAL.	24" O.C.
I 8	OEMLARIA CERASIFORMIS	INDIAN PLUM	1 GAL.	6' O.C.
P 26	ROSA PISOCARPA	SWAMP ROSE	1 GAL.	30" O.C.
E 8	SAMBUCUS RACEMOSA	RED ELDERBERRY	1 GAL.	AS SHOWN
28	SPIREA DOUGLASII	DOUGLAS' SPIREA	1 GAL.	30" O.C.
15	SYMPHORICARPUS ALBA	SNOWBERRY	1 GAL.	36" O.C.
12	THUJA PLICATA	WESTERN RED CEDAR	3'-4' CONT.	AS SHOWN

PRO-TIME 405 NATIVE WATER QUALITY FOR WET AREAS SEED MIX — 1,929 SF

AMERICAN SLOUGHGRASS	BECKMANNIA SYZIGACHNE	45%
WESTERN MANNAGRASS	GLYCERIA OCCIDENTALIS	45%
BALTIC RUSH	JUNCUS BALTICUS	5%
BEAKED SEDGE	CAREX ROSTRATA	5%

PRO-TIME 404 NATIVE WATER QUALITY MIX WITH COLOR — 4,612 SF

NATIVE CALIFORNIA BROME	BROMUS CARINATUS	55%
BLUE WILDRYE	ELYMUS GLAUCUS	25%
LUPINE	LUPINUS ALBICAULUS	15%
WESTERN YARROW	YARROW MILLEFOLIUM	5%

PRO-TIME COMPANION DWARF COVER BLEND — 1,443 SF

~~PRO-TIME 400 NATIVE SEED MIX~~		
~~BLUE WILDRYE~~	ELYMUS GLAUCUS	60%
~~WESTERN FESCUE GRASS~~	FESTUCA OCCIDENTALIS	30%
~~NATIVE CALIFORNIA BROME~~	BROMUS CARINATUS	10%
DWARF PERENNIAL RYEGRASS		

NOTE:

1. GRASS SEED IS TO COVER ALL AREAS NOT PLANTED WITH SHRUBS.

2. DRAIN ROCK SHALL BE PLACED IN BOTTOM OF POND IF CONSTRUCTED DURING THE WET SEASON (OCTOBER-MAY) TO PREVENT EROSION AND MUDDY DISCHARGE.

3. THE DEVELOPER WILL PAY THE CITY OF WEST LINN PARKS DEPARTMENT $150 FOR EACH REQUIRED STREET TREE AND ALL STREET TREES WILL BE PLANTED BY PARKS DEPARTMENTS.

4. WEED BARRIER: POLYSPUN 350 OR APPROVED EQUAL. INSTALL PER MANUFACTURER RECOMMENDATIONS.

5. PROVIDE TAG TO CITY FROM COMPANION BLEND PRIOR TO APPLICATION.

PERRON COLLABORATIVE
PLANNING
VISIONING
LANDSCAPE
ARCHITECTURE
Union Station, Suite 326
800 NW Sixth Avenue
Portland, OR 97209-3700
Tel.503.223.2266
Fax.503.223.3617
bob_perron@surroundinc.com

SFA Design Group, LLC
STRUCTURAL | CIVIL | LAND USE PLANNING
9020 SW Washington Square Dr. Suite 350
Portland, Oregon 97223
p: (503) 641-8311 f: (503) 643-7905
sfadesigngroup.com

LANDSCAPE PLAN
FIELD'S PARK

REGISTERED LANDSCAPE ARCHITECT
ROBERT P. PERRON
23
OREGON

NO.	DATE	REVISION	BY
1	5/5/06	AS-BUILT	SKH

DESIGNED BY JRH DATE 1/24/04
DRAWN BY RJW DATE 1/24/04
REVIEWED BY JRH DATE 1/24/04
PROJECT NO. 105-001 REF.
SCALE HORZ: 1"=10' VERT: 1"=4'
LANDSCAPE/PLANTING

SHEET L1 OF 1

PROJECT FIELD'S
NO. 105-001
TYPE CONSTRUCTION