CHINOOK TERRACE SUBDIVISION

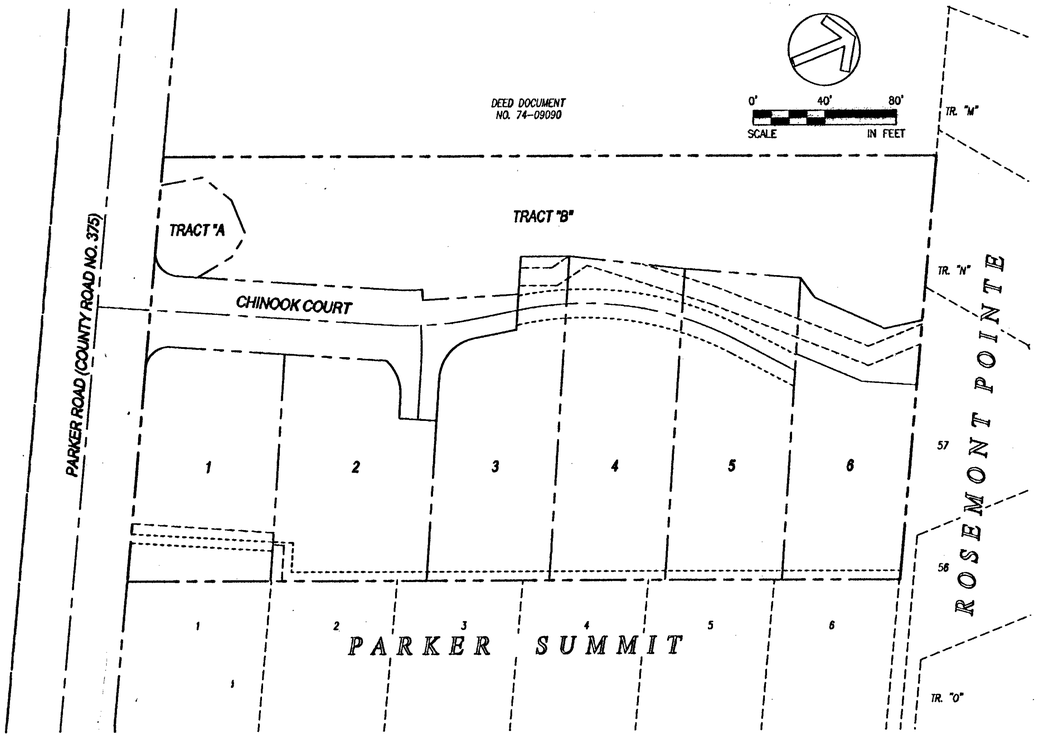

BENCH MARK

BENCHMARK: SALAMO (NGS GEODETIC CONTROL MONUMENT)
DATUM: CITY OF WEST LINN (THIRD ORDER CLASS II VERTICAL NAVD 88)
DESCRIPTION: 2-1/2" BRONZE DISK IN CONCRETE INSIDE A MONUMENT BOX, LOCATED IN THE CENTERLINE OF SALAMO ROAD NEAR THE SOUTHEAST CORNER OF THE ROSEMONT RIDGE MIDDLE SCHOOL PROPERTY, 0.2 MILES NORTHERLY OF PARKER ROAD.
ELEVATION: 693.00'

LOCATION

T2S R1E SEC 25CD TAX LOT 3900

IMPERVIOUS AREA

PUBLIC ROADS	=	8,761 SF
PRIVATE PROPERTY	=	17,171 SF
TOTAL	=	26,932 SF

REPAIR EMERGENCIES

NORTHWEST NATURAL GAS	- 800-882-3377
PORTLAND GENERAL ELECTRIC	- 503-464-7750
QWEST	- 800-573-1311
VERIZON	- 800-483-1000
CITY OF WEST LINN	- 503-722-5501
CITY OPERATIONS	- 503-656-6081

THE CONTRACTOR, IN LOCATION AND PROTECTING UNDERGROUND UTILITIES, MUST COMPLY WITH THE REGULATIONS OF O.R.S. 757.541 TO 757.571.

LOCATES (48 HOURS NOTICE REQUIRED)

ONE CALL SYSTEM (GENERAL TELEPHONE, NORTHWEST NATURAL GAS, PORTLAND GENERAL ELECTRIC)	- 246-6699
CABLE TELEVISION - TCI	- 246-6699

CALL BEFORE YOU DIG 800-332-2344

DEVELOPER:

MEL LEE
15746 S. HATTEN ROAD
OREGON CITY, OR 97045
PHONE: (503) 631-2459
CONTACT: MEL LEE

AS-BUILT
DATE JMK 4-29-11

PLANNING/ENGINEERING/SURVEYING:

SFA DESIGN GROUP, LLC.
9020 SW WASHINGTON SQUARE RD., SUITE 350
PORTLAND, OR 97223
PHONE: (503) 641-8311
FAX: (503) 643-7905
CONTACT: MATT SPRAGUE/BRENT FITCH

UTILITY COMPANIES

WATER	-	CITY OF WEST LINN
SEWER	-	CITY OF WEST LINN
STORM	-	CITY OF WEST LINN
GAS	-	NORTHWEST NATURAL GAS
ELECTRIC	-	PORTLAND GENERAL ELECTRIC
TELEPHONE	-	U.S. WEST
CABLE TV	-	COMCAST

LEGEND

EXISTING TREE
EXISTING SANITARY SEWER LINE
EXISTING STORM DRAIN LINE
EXISTING WATER LINE
EXISTING SANITARY SEWER MANHOLE
EXISTING CATCH BASIN
EXISTING STORM DRAIN MANHOLE
EXISTING WATER VALVE
EXISTING FIRE HYDRANT
SANITARY SEWER LINE
SANITARY SEWER MANHOLE
STORM DRAIN LINE
CATCH BASIN - OIL OSCB
STORM DRAIN MANHOLE
CURB INLET
CLEANOUT
WATER LINE
BLOWOFF
WATER VALVE
WATER METER
STREET LIGHT
THRUST BLOCK
FIRE HYDRANT
SIGN
UTILITY POLE
EDGE OF EXISTING PAVEMENT - EP
TEMPORARY CONSTRUCTION DRIVEWAY
STREET BARRICADE
UNDERGROUND ELECTRIC
EXISTING STREET LIGHT
TELEPHONE RISER
WELL - AS NOTED
FENCE - AS NOTED
SURFACE STORM WATER DRAINAGE
MONUMENT BOX
CONCRETE SURFACE
BRUSH/TREES
RIM TOP OF MANHOLE RIM
INV INVERT OF SEWERLINE
WETLANDS
ROCK OUTCROPPING
HANDICAP RAMP & SIDEWALK

ABBREVIATIONS

AC	ASPHALT CONCRETE	PC	POINT OF CURVATURE
ACP	ASBESTOS CEMENT PIPE	POC	POINT OF COMPOUND CURVATURE
AB	AGGREGATE BASE	PI	POINT OF INTERSECTION
BCR	BEGIN CURB RETURN	P	PROPERTY LINE
BM	BENCH MARK	PRC	POINT OF REVERSE CURVATURE
BVC	BEGIN VERTICAL CURVE	PT	POINT OF TANGENCY
CIP	CAST IRON PIPE	PVC	POLY-VINYL CHLORIDE
CJ	CONTROL JOINT	R	RADIUS
CL	CLASS	RCP	REINFORCED CONCRETE PIPE
℄	CENTERLINE	R/W	RIGHT-OF-WAY
CMP	CORRUGATED METAL PIPE	S	SEWER
CMU	CONCRETE MASONARY UNIT	SD	STORM DRAIN
CO	CLEANOUT	SL	SEWER LATERAL
CTV	CABLE TELEVISION	STA	STATION
DI	DROP INLET	STD. DTL.	STANDARD DETAIL
DIP	DUCTILE IRON PIPE	T	TELEPHONE
E	ELECTRICAL	TB	THRUST BLOCK
ECR	END CURB RETURN	TC	TOP OF CURB
EJ	EXPANSION JOINT	TCN	TOP OF CONCRETE
EL	ELEVATION	TD	TOP OF DIKE
EVC	END VERTICAL CURVE	TF	TOP OF FOOTING
EX	EXISTING	TG	TOP OF GRATE
FF	FINISH FLOOR	TI	TRAFFIC INDEX
FG	FINISH GRADE	TL	TRAFFIC LIGHT
FH	FIRE HYDRANT	TP	TOP OF PAVEMENT
FL	FLOWLINE	TYP.	TYPICAL
FLG	FLANGE	TW	TOP OF WALL
G	GAS	VCP	VITRIFIED CLAY PIPE
GM	GAS METER	VPI	VERTICAL POINT OF INTERSECTION
GB	GRADE BREAK	W	WATER
GSP	GALVANIZED STEEL PIPE	WM	WATER METER
HP	HIGH POINT	WV	WATER VALVE
L	CURVE LENGTH	Δ	DELTA (CURVE CENTRAL ANGLE)
LF	LINEAL FEET	±	APPROXIMATELY
MH	MANHOLE	%	PERCENT
MJ	MECHANICAL JOINT	<	LESS THAN
N.I.C.	NOT INCLUDED IN CONTRACT	>	GREATER THAN
OCEW	ON CENTER EACH WAY		

SHEET INDEX

1.	TITLE SHEET
1A.	CONDITIONS OF APPROVAL
2.	CONSTRUCTION NOTES
3.	EXISTING CONDITIONS & DEMOLITION PLAN
4.	GRADING PLAN
4a.	WETLAND REVEGETATION PLAN
5.	WATER QUALITY, DETENTION, AND STORM PLAN
6.	STREET, SANITARY SEWER & WATERLINE PLAN
7.-8.	STREET AND UTILITY PROFILES
9.	OFFSITE WATER & PED PATH PLAN & PROFILE
10-13.	CONSTRUCTION DETAIL SHEETS
L1 & L2	LANDSCAPE PLAN
E1	LIGHTING PLAN
S1.1	STRUCTURAL RETAINING WALL NOTES
S2.1	STRUCTURAL RETAINING WALL PLAN
S4.1	STRUCTURAL RETAINING WALL & BOARDWALK DETAILS

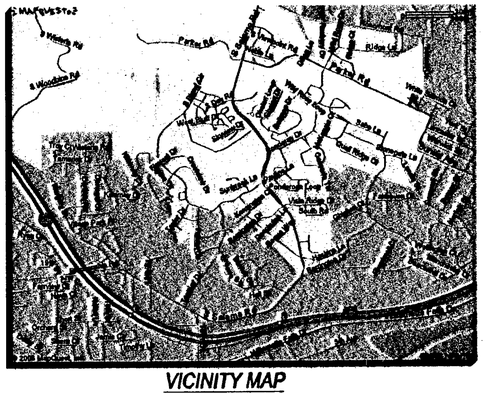

VICINITY MAP
N.T.S.

SFA Design Group, LLC
STRUCTURAL | CIVIL | LAND DEVELOPMENT
9020 SW Washington Square Dr. Suite 350
Portland, Oregon 97223
p: (503) 641-8311 f: (503) 643-7905
sfadesigngroup.com

TITLE SHEET
CHINOOK TERRACE SUBDIVISION
WEST LINN, OREGON

REGISTERED PROFESSIONAL ENGINEER — OREGON — JULY 12, 2005 — BRENT E. FITCH
VALID THROUGH 12-31-11
5/25/11

NO.	DATE	REVISION	BY
0	11/06/06	INITIAL SUBMITTAL	
1	03/19/07	REVISED PER CITY COMMENTS	
2	05/09/07	REVISED PER CITY COMMENTS	
3	05/29/07	REVISED PER CITY COMMENTS	
4	11/7/07	AS-BUILT REVISIONS	JDF
5	4/29/11	AS-BUILT REVISIONS	JMK

DESIGNED BY BEF DATE 9/06
DRAWN BY RMM DATE 9/06
REVIEWED BY BEF DATE 9/06
PROJECT NO. 271-001 REF.
SCALE 1"=20' MM

SHEET 1 OF 13

PROJECT CHINOOK TERRACE
NO. 271-001
TYPE AS-BUILTS

PARKER ROAD SUBDIVISION CONDITIONS OF APPROVAL

WEST LINN PLANNING COMMISSION

FINAL DECISION NOTICE

SUB 06-03/MISC 06-12

IN THE MATTER OF A 6-LOT SUBDIVISION AND WETLANDS PERMIT AT 2929 PARKER ROAD

At their regular meeting of October 12, 2006, the West Linn Planning Commission held a public hearing to consider the request by Renaissance Development to approve a 6-lot subdivision and wetlands permit. The site is located at 2929 Parker Road. The approval criteria for a subdivision are found within Chapter 85 of the Community Development Code (CDC), and the wetland permit was judged based upon the criteria found in CDC Chapter 30. The hearing was conducted pursuant to the provisions of CDC, Chapter 99.

The hearing commenced with a staff report presented by Gordon Howard, Senior Planner. The applicant provided a presentation. No additional public testimony was received. The public hearing was closed.

A motion was made and seconded to adopt the findings presented in the staff report and approve the proposed subdivision and wetland permit, with the following conditions of approval.

1. The approved tentative plat is that shown on Sheet 1 of the applicant's revised submittal, dated September 2006.
2. The applicant shall adjust the boundaries of the lots and access easements so that each lot has at least 10,000 square feet of area exclusive of any access easements.
3. The new public street shall be dedicated with a width of 40 feet, a pavement width of 28 feet, and 6-foot sidewalks on each side, to the point where the hammerhead turnaround begins. No sidewalks shall be required in the hammerhead area.
4. A pedestrian access easement shall be placed over portions of the pedestrian pathway not within the publicly dedicated tract, and shall begin at the termination of the sidewalk on the east side of the proposed public street.
5. The applicant shall submit a proposed street name for the new public street, to be approved by the Planning Director.
6. Prior to commencement of any site clearing or grading, the applicant shall place anchored and secured chain link fencing at the location as shown on the tentative plan to protect the trees at the southeast corner of the site. The city arborist shall inspect and approve this location prior to the start of work. The fencing shall remain in place throughout the development of the site and construction of the homes, to be removed only upon the completion of all construction activity.
7. Prior to commencement of any site clearing or grading, the applicant shall place anchored and secured chain link fencing along the entire eastern boundary of the riparian and wetland transition area and at the boundary of the storm detention pond located adjacent to Parker Road. City staff shall inspect and verify the proper location prior to the start of work. The fencing shall remain in place throughout the development of the site and construction of the homes, to be removed only upon the completion of all construction activity.
8. The applicant shall implement the proposed mitigation and revegetation plan for the wetland and riparian area. The plan must be completed, except for any ongoing maintenance activities, prior to the recordation of the final plat.
9. Once the protective fencing is removed, the protected wetland and riparian area shall be identified with City-approved permanent markers at all boundary direction changes and at 30- to 50-foot intervals that clearly delineate the extent of the protected area.
10. The applicant must pay contribution towards future traffic signal at intersection of Salamo/Rosemont/Santa Anita. Applicant's traffic engineer must determine trips contributed to the intersection by applicant's proposed subdivision. Contribution has been established at $1,071.43/PM peak hour trip.
11. All public improvements must comply with the City of West Linn Public Works Design and Construction Standards.
12. The six-inch water main serving subdivision must be looped between Parker Road and Coho Lane through a public easement.
13. No retaining walls shall be constructed in public utility easements unless approved by the City Engineer.
14. All required City, State, and Federal permits must be obtained prior to working in the natural drainageway, wetland area, and transition area.
15. Public improvements in Parker Road must match and coordinate with Maxfield and Parker Crest subdivisions.

This decision will become effective 14 days from the date of mailing of this final decision as identified below. Those parties with standing (i.e., those individuals who submitted letters into the record, or provided oral or written testimony during the course of the hearing, or signed in on the attendance sheet at the hearing, or who have contacted City Planning staff and made their identities known to staff) may appeal this decision to the West Linn City Council within 14 days of the mailing of this decision pursuant to the provisions of Chapter 99 of the Community Development Code. Such appeals would require a fee of $400 and a completed appeal application form together with the specific grounds for appeal to the Planning Director prior to the appeal-filing deadline.

[signature] Oct 25, 2006

JOHN KOVASH, CHAIR — DATE

WEST LINN PLANNING COMMISSION

Mailed this 25 day of October, 2006.

Therefore, this decision becomes final at 5 p.m., November 8, 2006.

Devrev/Finaldecisions/SUB 06-03-2929 Parker Road

CHINOOK TERRACE SUBDIVISION CONDITIONS OF APPROVAL

WEST LINN PLANNING COMMISSION

FINAL DECISION NOTICE

MISC-10-12

IN THE MATTER OF THE PROPOSAL OF A TWO-YEAR EXTENSION OF APPROVAL OF A 6-LOT SUBDIVISION WITH A WETLANDS PERMIT (ORIGINAL FILE SUB-06-03/MISC-06-12) AT 2929 PARKER ROAD

At their meeting of September 15, 2010, the West Linn Planning Commission held a public hearing to consider the request by Mel Lee to approve a two-year extension of Subdivision and Wetlands Permit entitlements for the six lot subdivision originally approved as SUB-06-03/MISC-06-12, at 2929 Parker Road. This required an Extension permit. The approval criteria for Extensions are found in Section 99.325 of the Community Development Code (CDC). The approval criteria for subdivisions are found in Chapter 85 of the CDC. The approval criteria for water resource area protection are found in Chapter 32 of the CDC. The provisions for development in the R-10 zone are found in Chapter 11 of the CDC. The hearing was conducted pursuant to the provisions of CDC Chapter 99.

The hearing commenced with a staff report presented by Tom Soppe, Associate Planner. Ben Altman of SFA Design Group gave the applicant's presentation. Alice Richmond spoke in favor of the application. Scott Supperstein spoke in opposition to the application. Mr. Altman provided the applicant's rebuttal.

A motion was made, seconded, and passed to approve the application with one new finding and with staff's conditions of approval with modifications to Condition of Approval 3. The additional finding is as follows:

<u>Additional Finding 1</u>: The access provided to lots 3-6 and the grading of lots 3-6 that have already been legally completed (under the entitlements of SUB-06-03/MISC-10-12) are existing conditions. These existing conditions affect all areas of these lots east of where the driveway has been built or is planned to be built. These existing conditions irreversibly determine the configuration of these lots, in that all areas immediately east of the driveway will be part of the front yard area of each lot. These existing lot configurations greatly affect whether the areas at the front of these lots east of the driveway would be likely to successfully be preserved in the natural state demanded for undeveloped water resource transition areas in conservation easements by 32.050(D). Future homeowners would not necessarily be likely to properly maintain and respect the restrictions of a conservation easement east of the driveway in their front yards, as this area would probably be perceived and treated by homeowners as a usable area of their front yard rather than a conservation easement that needs to be kept in its natural state. Due to these existing conditions, the areas of the transition area east of the driveway as delineated on the applicant's site plan (Updated Tentative Plat, Sheet 1 of 5, date stamped received July 20, 2010) located in Exhibit PC-4 on Page 32 shall be allowed to be part of the usable front yard area of each lot rather than being required to be in a conservation easement. Since these particular areas within the transition area setback as delineated by 32.050(E) will not be in an easement, the applicant shall mitigate an area with square footage equal to the square footage of these areas in a water resource transition area in Fields Bridge Park, per the provisions of 32.070.

The approved conditions of approval are as follows:

1. <u>Site Plan</u>. With the exception of modifications required by these conditions, the project shall conform to the site plan (Updated Tentative Plat, Sheet 1 of 5, date stamped received July 20, 2010) located in Exhibit PC-4 on Page 32.
2. <u>Previous Approval</u>. Unless modified by these conditions, the project shall conform to the conditions of original approval (file SUB-06-03/MIS-06-12).
3. <u>Tracts and Easements Containing Water Resources and Transition Area</u>. To ensure protection of water resources on site and their transition areas as currently delineated pursuant to CDC Section 32.050(E), all of the transition area lying west of the driveway on lots 3-6 that is not in tracts A and B or the proposed Chinook Court public right-of-way as delineated on the applicant's site plan (Updated Tentative Plat, Sheet 1 of 5, date stamped received July 20, 2010) located in Exhibit PC-4 on Page 32, shall be placed in a conservation easement. All transition area that is not contained in the conservation easement or tract shall be mitigated for off site. The easement shall be recorded with Clackamas County and shall be recorded on the final plat.
4. <u>Vegetative Improvements</u>. The applicant shall demonstrate to Planning staff whether the water resource areas and transition area on site contain native plants on more or less than 80% of their area. If they contain native plants on less than 80% of their area, the applicant shall submit and implement a revegetation plan pursuant to CDC Section 32.080 that results in 80% or more of the upland water resources areas and transition area on site being covered with native plants.
5. <u>Revegetation of Transition Area</u>. The applicant shall revegetate any area of the water resource transition area that is disturbed during the construction of the driveways for lots 5 and 6 consistent with CDC Section 32.080.

This decision will become effective 14 days from the date of mailing of this final decision as identified below. Those parties with standing (i.e., those individuals who submitted letters into the record, or provided oral or written testimony during the course of the hearings, or signed in on an attendance sheet or testimony form at either of the hearings, or who have contacted City Planning staff and made their identities known to staff) may appeal this decision to the West Linn City Council within 14 days of the mailing of this decision pursuant to the provisions of Chapter 99 of the Community Development Code. Such appeals would require a fee of $400

2

[signature] 9/20/2010

MICHAEL JONES, VICE CHAIR — DATE

WEST LINN PLANNING COMMISSION

Mailed this 21 day of September, 2010.

Therefore, this decision becomes effective at 5 p.m., October 5, 2010.

Devrev/projects folder/projects 2010/MISC-10-15/MISC-10-15 Final Decision

AS-BUILT

DATE JMK 4-29-11

5/25/11

REGISTERED PROFESSIONAL ENGINEER 54627PE OREGON MAR. 12, 2002 BRENT E. FITCH

VALID THROUGH 12-31-11

NO.	DATE	REVISION	BY
0	11/06/06	INITIAL SUBMITTAL	
1	03/19/07	REVISED PER CITY COMMENTS	
2	05/09/07	REVISED PER CITY COMMENTS	
3	05/28/07	REVISED PER CITY COMMENTS	
4	11/7/07	AS-BUILT REVISIONS	JDF
5	4/29/11	AS-BUILT REVISIONS	JMK

DESIGNED BY BEF DATE 9/06
DRAWN BY RMW DATE 9/06
REVIEWED BY BEF DATE 9/06
PROJECT NO. 271-001 REF.
SCALE N/A
N/A

SHEET 1A OF 13

PROJECT CHINOOK TERRACE
NO. 271-001
TYPE AS-BUILTS

TITLE SHEET
CHINOOK TERRACE SUBDIVISION
WEST LINN, OREGON

SFA Design Group, LLC
STRUCTURAL | CIVIL | LAND USE PLANNING
9020 SW Washington Square Dr. Suite 350
Portland, Oregon 97223
p: (503) 641-8311 f: (503) 643-7905
sfadesigngroup.com

dburnett, Plotted: May 23, 2011 - 9:14am, B:\Land Projects 2004\271-001\const mgmt\AS-BUILTS 4-27-11\10611_01covr.dwg

GENERAL NOTES:

1. ALL CONSTRUCTION SHALL BE IN STRICT ACCORDANCE WITH THE CITY OF WEST LINN CONSTRUCTION STANDARDS.
2. THE DESIGN ENGINEER WILL BE RESPONSIBLE FOR INSPECTION OF THE PROPOSED IMPROVEMENTS WITH OVER SIGHT FROM CITY'S PUBLIC WORKS AND ENGINEERING STAFF.
3. A WORK SCHEDULE WILL BE REQUIRED FROM THE CONTRACTOR SO THAT THE ENGINEER CAN HAVE AN INSPECTOR ONSITE AT THE APPROPRIATE TIMES. IF THE WORK SCHEDULE IS REVISED THE CONTRACTOR IS TO NOTIFY THE ENGINEER OF THE CHANGES. ADDITIONALLY THE CONTRACTOR IS TO GIVE THE ENGINEER AT LEAST 24 HOURS NOTICE OF ANY TESTING REQUIRING THE PRESENCE OF THE ENGINEER AND/OR CITY STAFF.
4. THE CONTRACTOR IS TO RECEIVE THE APPROVAL OF THE ENGINEER OF ANY PROPOSED CHANGES TO THE PLANS OR STANDARD REQUIREMENTS.
5. A BUILDING DEPARTMENT PLUMBING PERMIT IS REQUIRED FOR UTILITIES BEYOND THE FIRST CLEANOUT OR METER ON PRIVATE PROPERTY.
6. A PRE-CONSTRUCTION MEETING WITH THE CITY OF WEST LINN IS REQUIRED PRIOR TO BEGINNING CONSTRUCTION. PRIOR TO SITE CLEARING, CONSTRUCTION "SNOW" FENCING SHALL BE PLACED AROUND TREES TO BE PRESERVED 10 FEET BEYOND THE DRIPLINE OF THE TREES AND SHALL REMAIN IN PLACE THROUGHOUT THE INFRASTRUCTURE IMPROVEMENTS.
7. ALL PUBLIC IMPROVEMENTS SHALL BE IN PLACE AND ACCEPTED PRIOR BY THE CITY PRIOR TO ANY FINAL PLAT RECORDING AND ISSUANCE OF BUILDING PERMITS.
8. ALL PEDESTRIAN RAMPS SHALL MEET ADA REQUIRMENTS.

WATER SUPPLY:

1. WATER MAINS SHALL BE DUCTILE IRON PIPE CONFORMING TO AWWA C151 CLASS 52. PIPE IS TO HAVE CEMENT MORTAR LINING AND BITUMINOUS SEAL COAT CONFORMING TO AWWA C104. JOINTS ARE TO BE PUSH-ON JOINT. PIPE FITTINGS ARE TO BE OF THE SAME MATERIAL AND CLASS AS PIPE AND OF DOMESTIC ORIGIN.
2. WATER MAINS TO HAVE A MINIMUM COVER OF 36".
3. THRUST BLOCKS ARE TO BE PROVIDED AT ALL CHANGES IN DIRECTION AND BRANCHES. THRUST BLOCKING CONCRETE STRENGTH IS TO BE 3000 PSI MIN. SEE DETAILS FOR THRUST BLOCK SIZING. POUR THRUST BLOCKS AGAINST UNDISTURBED EARTH. ALL THRUSTS BLOCKS SHALL BE INSPECTED BY THE CITY PRIOR TO POURING AND PRIOR TO BACKFILLING.
4. GATE VALVES SHALL BE A DOUBLE DISC TYPE CONFORMING TO AWWA C500. BUTTERFLY VALVES SHALL BE CLASS 150 B SHORT BODY TYPE IN CONFORMANCE WITH AWWA C504. VALVE BOXES SHALL BE RICH MODEL 925 OR EQUAL.
5. FIRE HYDRANTS SHALL CONFORM TO AND SHALL BE INSTALLED IN ACCORDANCE WITH CITY STANDARDS. PUMPER OUTLET IS TO FACE THE DIRECTION OF ACCESS.
6. GRANULAR BACKFILL IS TO BE COMPACTED TO 95% MAXIMUM DRY DENSITY PER AASHTO T-180 TEST METHOD AND NATIVE MATERIAL SHALL BE COMPACTED TO 85% OF IN-PLACE DRY DENSITY OF SURROUNDING SOIL. BACKFILL UNDER STREETS SHALL BE IN ACCORDANCE WITH CLASS 'B' BACKFILL AS INDICATED ON THE DETAIL SHEET OF THE PLANS. EXCAVATION, BEDDING AND BACKFILL SHALL BE IN ACCORDANCE WITH APWA DIVISION IV, SECTION 401.
7. SERVICE LATERALS SHALL BE TYPE K. LATERAL SIZES SHALL BE 1". FOR DOUBLE SERVICES TWO 1" WATER SERVICE SHALL BE LAID SIDE BY SIDE. CORPORATION STOPS SHALL BE FORD OR APPROVED EQUAL. CURB STOP SHALL BE 1" FORD METER STOP. METER BOXES SHALL BE EQUAL TO BROOKS #31. METER BOXES ARE TO BE INSTALLED 3/4" ABOVE FINISH GRADE. REFER TO STANDARD DETAIL WL-402.
8. ALL WATERLINES SHALL PASS ALL TESTS PER CITY OF WEST LINN CONSTRUCTION STANDARDS PRIOR TO ACCEPTANCE. PRESSURE TEST SHALL BE CONDUCTED AT 180psi FOR 1 HOUR WITH NO LOSS.
9. (NOT USED)
10. DO NOT CONNECT NEW PIPE TO EXISTING PIPE PRIOR TO TESTING. THE CITY OF WEST LINN REQUIRES ACCEPTANCE OF NEW WATERLINE PRIOR TO CONNECTION TO EXISTING WATER SYSTEM.
11. A PLUMBING PERMIT FROM THE CITY OF WEST LINN BUILDING DEPARTMENT IS REQUIRED FOR SERVICE LATERAL INSTALLATIONS BEYOND THE WATER METER.
12. ALL MATERIALS, INSTALLATION, TESTS, AND CHLORINATION TO BE IN STRICT ACCORDANCE WITH APWA'S STANDARD SPECIFICATIONS FOR PUBLIC WORKS CONSTRUCTION, THE SUPPLEMENTAL STANDARDS AND CODES OF THE CITY OF WEST LINN, AND THE OREGON STATE HEALTH DIVISION ADMINISTRATIVE RULES, CHAPTER 333.

STREETS:

1. NEW STREET SECTIONS ARE TO BE CLEARED OF ALL SURFACE VEGETATION AND OTHER MISCELLANEOUS STRUCTURES OR MATERIALS. GRUB IMPROVEMENT AREAS TO REMOVE ALL BURIED VEGETATIVE MATTER AND DEBRIS TO A DEPTH OF 8" BELOW SUBGRADE. PROPERLY DISPOSE OF ALL WASTE MATERIAL.
2. STREET SUBGRADE SHALL CONFORM TO APWA DIVISION II, SECTION 206. AREAS TO RECEIVE FILL ARE TO BE INSPECTED BY CITY OF WEST LINN PERSONNEL PRIOR TO PLACEMENT OF THE FILL. THE CONTRACTOR SHALL HAVE FILL AREAS TESTED FOR COMPACTION BY A CERTIFIED TESTING LAB IN ACCORDANCE WITH APWA DIVISION II, SECTION 206.3.05. SUCH TESTING WILL BE AT THE CONTRACTOR'S EXPENSE.
3. AGGREGATE BASE ROCK SHALL CONFORM TO THE REQUIREMENTS OF APWA DIVISION II, SECTION 207. BASE COURSE SHALL BE (1 1/2"-0) CRUSHED ROCK AND LEVELING COURSE SHALL BE (3/4"-0). CITY OF WEST LINN REQUIRES A PROOF ROLL WITH A LOADED 10 YARD DUMP TRUCK OF THE SUBGRADE PRIOR PLACEMENT OF THE ROCK AND AGAIN AFTER PLACEMENT OF THE BASE ROCK AND PRIOR TO PAVING. ALL UNDERGROUND UTILITIES INCLUDING LATERALS, SERVICES AND POWER OR GAS CONDUITS WILL BE IN PLACE BEFORE SUBGRADE PROOF ROLL WILL TAKE PLACE.
4. ASPHALT CONCRETE SHALL CONFORM TO THE REQUIREMENTS OF APWA DIVISION II, SECTION 211. 2" BASE LIFT SHALL BE CLASS 'B' A.C. AND THE FINAL LIFT SHALL BE 1 1/2" OR 2" CLASS 'C' A.C. AS PER APWA DIVISION II, SECTION 211.2.01 AND AS SPECIFIED ON SHEET #4. THE TOP LIFT OF ASPHALT CONCRETE SHALL NOT BE PLACED PRIOR TO RECEIVING PERMISSION FROM THE CITY OF WEST LINN ENGINEERING DEPARTMENT.
5. CONSTRUCT CURB AND GUTTER USING CLASS 'A' 3300 PSI CONCRETE WITH MAXIMUM 1 1/2" AGGREGATE SIZE. CONTRACTION JOINTS AT 15' MAXIMUM ON CENTERS. THREE INCH WEEPHOLES ARE TO BE INSTALLED ON ALL LOTS UPHILL OR EVEN WITH THE STREET. GENERALLY WEEPHOLES SHALL BE LOCATED AT THE CENTER AND LOWEST EDGE OF CURB FOR EACH LOT. CURB DEPRESSIONS FOR HANDICAP RAMPS SHALL BE CENTERED BETWEEN CURB RETURNS AT INTERSECTIONS UNLESS OTHERWISE NOTED ON THE PLANS. CONTRACTOR SHALL STAMP LOCATION OF SEWER AND WATER CROSSINGS WITH AN (S) OR A (W).
6. ALL MATERIALS, INSTALLATION, TESTS, AND INSPECTIONS TO BE IN STRICT ACCORDANCE WITH APWA'S STANDARD SPECIFICATIONS FOR PUBLIC WORKS CONSTRUCTION AND THE SUPPLEMENTAL STANDARDS AND SPECIFICATIONS OF THE CITY OF WEST LINN STREET/UTILITY DESIGN AND CONSTRUCTION STANDARDS.
7. A STREET CONSTRUCTION ENCROACHMENT PERMIT OR SIMILAR PERMIT MAY BE REQUIRED FROM THE CITY OF WEST LINN. CONSTRUCTION PERMIT FEES OR OTHER SIMILAR FEES OR BONDING REQUIRED OF THE CONTRACTOR WILL BE THE CONTRACTOR'S RESPONSIBILITY TO OBTAIN.

UTILITIES:

1. IF NOT NOTED ON THE PLANS UTILITY INFORMATION AND CROSSING LOCATIONS WILL HAVE TO BE OBTAINED FROM THE UTILITIES.
2. UTILITY CONTACTS ARE AS FOLLOWS:

   PGE – CINDY MANSELLE, 650-1411;
   COMCAST – JAMIE STENCIL, 243-7497,
   U.S. WEST COMMUNICATIONS – JACKIE LOLLAR 242-8496.

SANITARY SEWER:

1. PIPE SHALL BE PVC SEWER PIPE CONFORMING TO ASTM D-3034-SDR 35. MINIMUM STIFFNESS SHALL BE 46 PSI AND JOINT TYPE SHALL BE ELASTOMERIC GASKET CONFORMING TO ASTM D-3212.
2. MANHOLE BASE SHALL BE PRECAST CONCRETE BASE WITH A MINIMUM COMPRESSIVE STRENGTH OF 3000 PSI, AND SHALL CONFORM TO THE REQUIREMENTS OF ASTM C478. THE BASE RISER SECTION SHALL BE INTEGRAL WITH THE BASE SLAB. MANHOLE RISERS AND TOPS SHALL BE PRECAST SECTIONS WITH MINIMUM COMPRESSIVE STRENGTH OF 4000 PSI. TOPS SHALL BE ECCENTRIC CONES EXCEPT WHERE INSUFFICIENT HEADROOM REQUIRES FLAT TOPS. INVERTS SHALL BE CONSTRUCTED SO AS TO PROVIDE SMOOTH FLOW-THROUGH CHARACTERISTICS. PVC PIPE SHALL BE CONNECTED TO MANHOLE BY MEANS OF AN ELASTOMERIC GASKET, AN APPROVED WATERSTOP, OR FLEXIBLE SLEEVE. CEMENT GROUT FOR CONNECTING PVC SEWER PIPE TO MANHOLE WILL NOT BE PERMITTED.
3. ALL MANHOLES LOCATED IN EASEMENT AREAS REQUIRE TAMPER PROOF LIDS. ALL MANHOLE RIMS NOT IN PAVEMENT AREA TO BE SET 12 INCHES ABOVE PROPOSED GRADE.
4. CLEANOUT PIPE, FITTINGS, AND JOINTS SHALL BE THE SAME SPECIFICATIONS AS FOR PIPE. CASTINGS ARE AS SHOWN ON DETAIL AND SHALL CONFORM TO ASTM A48 (GRADE 30). CLEANOUT RISER SHALL MATCH DOWNSTREAM PIPE DIAMETER.
5. GRANULAR BACKFILL IS TO BE COMPACTED TO 95% MAXIMUM DRY DENSITY PER AASHTO T-180 TEST METHOD AND NATIVE MATERIAL SHALL BE COMPACTED TO 85% OF IN-PLACE DRY DENSITY OF SURROUNDING SOIL.
6. PVC SERVICE LATERALS SHALL BE 4" PIPE CONFORMING TO THE SAME SPECIFICATIONS AS THE SEWER MAINS. SERVICE LATERALS SHALL BE INSTALLED TO A POINT BEYOND THE LINE OF THE SEWER OR UTILITY EASEMENT AS SHOWN ON THE PLAN. THE SERVICE LATERAL SHALL BE PLUGGED WITH A 4" RUBBER RING PLUG, AND THE LOCATION OF THE LATERAL'S END MARKED WITH A 2" X 4" STAKE PAINTED GREEN AND MARKED WITH THE DEPTH OF THE LATERAL.
7. SANITARY SEWER PIPE AN APPURTENANCES SHALL BE TESTED FOR LEAKAGE IN ACCORDANCE WITH APWA DIVISION III REQUIREMENTS. LEAKAGE TESTS WILL INCLUDE REQUIRED APWA AIR PRESSURE TEST FOR SEWER LINES AND REQUIRED APWA VACUUM TEST OF MANHOLES. ALL PVC PIPE SHALL BE TESTED FOR DEFLECTION. DEFLECTION SHALL BE TESTED WITH A MANDREL EQUAL TO 95% OF THE PIPE SIZE BEING TESTED. IN ADDITION, SEWER LINES SHALL BE VIDEO INSPECTED BY THE CONTRACTOR PER APWA, DIVISION III, SECTION 303.3.11. ALL TESTS SHALL BE WITNESSED BY THE ENGINEER AND THE CITY OF WEST LINN.
8. A PLUMBING PERMIT FROM THE CITY OF WEST LINN BUILDING DEPARTMENT IS REQUIRED FOR SANITARY SEWER LATERALS BEYOND THE FIRST CLEANOUT.
9. ALL MATERIALS, INSTALLATION, TESTS, AND INSPECTIONS TO BE MADE IN STRICT ACCORDANCE WITH CITY OF WEST LINN'S STREET/UTILITY CONSTRUCTION STANDARDS, WITH APWA'S STANDARD SPECIFICATIONS FOR PUBLIC WORKS CONSTRUCTION, AND WITH THE UNIFORM PLUMBING CODE.

STORM SEWER:

1. PIPE 24" OR LESS, SHALL BE SEAMLESS PVC PIPE CONFORMING TO ASTM F794. (PW RIB).
2. GUTTER INLETS SHALL BE POURED IN-PLACE CONCRETE WITH A MINIMUM COMPRESSIVE STRENGTH OF 3000 PSI. FRAME SHALL BE FABRICATED OF STRUCTURAL STEEL, ASTM A-7, A-36, A-273.
3. MANHOLE BASE MAY BE POURED IN-PLACE CONCRETE OR PRECAST. MANHOLE RISERS AND TOPS SHALL BE PRECAST SECTIONS WITH A MINIMUM COMPRESSIVE STRENGTH OF 4000 PSI. TOPS SHALL BE ECCENTRIC CONES EXCEPT WHERE INSUFFICIENT HEADROOM REQUIRES FLAT TOPS. SOME OR ALL OF THE STORM DRAIN MANHOLES REQUIRED WILL BE OVERSIZED MANHOLES. INTERIOR DIMENSIONS NOTED ON THE PLANS ARE MINIMUMS. CHECK WITH MANHOLE MANUFACTURER FOR ACTUAL SIZE NEEDED FOR TYPE OF PIPE TO BE USED.
4. ALL MANHOLES LOCATED IN EASEMENT AREAS REQUIRE TAMPER PROOF LIDS. ALL MANHOLE RIMS NOT IN PAVEMENT AREA TO BE SET 12 INCHES ABOVE PROPOSED GRADE.
5. CLEANOUT PIPE, FITTINGS AND JOINTS SHALL BE THE SAME SPECIFICATION AS FOR PIPE. CASTINGS ARE SHOWN ON DETAIL AND SHALL CONFORM TO ASTM A 48 (GRADE 30). CLEANOUT RISER SHALL MATCH DOWNSTREAM PIPE DIAMETER.
6. GRANULAR BACKFILL IS TO BE COMPACTED TO 95% MAXIMUM DRY DENSITY PER AASHTO T-180 TEST METHOD AND NATIVE MATERIAL SHALL BE COMPACTED TO 85% OF IN-PLACE DRY DENSITY OF SURROUNDING SOIL.
7. RIPRAP WHERE NOTED ON THE PLANS IS TO BE CLASS 50 IN ACCORDANCE WITH OREGON STATE HIGHWAY DIVISION SPECIFICATION 714.
8. STORM DRAINS SHALL BE TESTED FOR DEFLECTION WITH A MANDREL EQUAL TO 95% OF THE PIPE SIZE BEING TESTED. IN ADDITION, STORM LINES SHALL BE VIDEO INSPECTED BY THE CONTRACTOR PER APWA, DIVISION III, SECTION 303.3.11. ALL TESTS SHALL BE WITNESSED BY THE ENGINEER.
9. A PLUMBING PERMIT FROM THE CITY OF WEST LINN BUILDING DEPARTMENT IS REQUIRED FOR STORM DRAINS BEYOND THE FIRST CLEANOUT.
10. A BACKWATER CHECK VALVE SHALL BE INSTALLED ON THE 4" ROOF DRAIN SERVICE TO ANY LOT THE HAS THE END OF ITS ROOF DRAIN STUB LOCATED BELOW THE DETENTION OVERFLOW ELEVATION. THESE CHECK VALVES SHALL BE A CANPLAS 3284 4" ABS VALVE OR OTHER EQUAL LOW PRESSURE VALVE.
11. ALL MATERIALS, INSTALLATION, TESTS, AND INSPECTIONS TO BE IN STRICT ACCORDANCE WITH APWA'S STANDARD SPECIFICATIONS FOR PUBLIC WORKS CONSTRUCTION AND THE SUPPLEMENTAL STANDARDS AND SPECIFICATION OF THE CITY OF WEST LINN STREET/UTILITY DESIGN AND CONSTRUCTION STANDARDS.

EROSION CONTROL SUMMARY:

1. THE INTENT OF THE REQUIREMENT IS TO PREVENT SILTATION FROM REACHING STORM DRAIN SYSTEMS AND DRAINAGE WAYS.
2. THE MINIMUM MEASURES NEED TO BE MADE ON ALL PROJECTS.
   A) A GRAVEL PAD, AT LEAST 50 FEET LONG, IS REQUIRED WHERE VEHICLES WILL LEAVE THE CONSTRUCTION SITE.
   B) A SEDIMENT BARRIER IS TO BE CONSTRUCTED OF STRAW BALES OR A SEDIMENT FENCE WHERE NOTED IN THE DETAILS OR WHERE SEDIMENT WILL CROSS OUTSIDE THE WORK AREA.
   C) WHERE EXCAVATED MATERIAL IS PLACED ON HARD SURFACES (SUCH AS STREETS) MATERIAL MUST BE BROOMED OR SCRAPED CLEAN AS SOON AS POSSIBLE.
   D) RIPRAP EXITS FROM ALL CULVERTS AND STORM DRAIN PIPES DRAINING INTO THE DITCHES OR SWALES. RIPRAP IS TO BE CLASS 50 RIPRAP OR LARGER OR AS NOTED ELSEWHERE IN THE PLANS.
   E) RESEED OR COVER DISTURBED AREAS AS SOON AS IS POSSIBLE AND PRACTICAL BUT NO LATER THAN THE COMPLETION OF CONSTRUCTION ON THE OTHER PHASES OF WORK. EROSION CONTROL MEASURES SUCH AS HAY BALES AND SILT FENCES MUST REMAIN IN PLACE UNTIL SEEDED AREAS SHOW GROWTH SUBSTANTIAL TO PREVENT EROSION.

GENERAL:

1. APPROVAL OF THIS EROSION CONTROL (ESC) PLAN DOES NOT CONSTITUTE AN APPROVAL OF PERMANENT ROAD OR DRAINAGE DESIGN (E.G. SIZE AND LOCATION OF ROADS, PIPES, RESTRICTORS, CHANNELS, RETENTION FACILITIES, UTILITIES, ETC.)
2. THE IMPLEMENTATION OF THESE ESC PLANS AND THE CONSTRUCTION, MAINTENANCE, REPLACEMENT, AND UPGRADING OF THESE ESC FACILITIES IS THE RESPONSIBILITY OF THE APPLICANT/CONTRACTOR UNTIL ALL CONSTRUCTION IS COMPLETED AND APPROVED, AND VEGETATION OF LANDSCAPING IS ESTABLISHED.
3. THE ESC FACILITIES ON THIS PLAN MUST BE CONSTRUCTED IN CONJUNCTION WITH ALL CLEARING AND GRADING ACTIVITIES, AND IN SUCH A MANNER AS TO ENSURE THAT SEDIMENT LADEN WATER DOES NOT ENTER THE DRAINAGE SYSTEM OR VIOLATE APPLICABLE WATER STANDARDS.
4. THE ESC FACILITIES SHOWN ON THIS PLAN ARE THE MINIMUM REQUIREMENTS FOR ANTICIPATED SITE CONDITIONS. DURING THE CONSTRUCTION PERIOD, THESE ESC FACILITIES SHALL BE UPGRADED AS NEEDED FOR UNEXPECTED STORM EVENTS AND TO ENSURE THAT SEDIMENT LADEN WATER DOES NOT LEAVE THE SITE.
5. THE ESC FACILITIES SHALL BE INSPECTED DAILY BY THE APPLICANT/CONTRACTOR AND MAINTAINED AS NECESSARY TO ENSURE THEIR CONTINUED FUNCTIONING.
6. THE ESC FACILITIES ON INACTIVE SITES SHALL BE INSPECTED AND MAINTAINED A MINIMUM OF ONCE A MONTH, OR WITHIN 24 HOURS FOLLOWING A STORM EVENT.
7. AT NO TIME SHALL MORE THAN ONE FOOT OF SEDIMENT BE ALLOWED TO ACCUMULATE WITHIN A TRAPPED CATCH BASIN. ALL CATCH BASINS AND CONVEYANCE LINES SHALL BE CLEANED PRIOR TO PAVING. THE CLEANING OPERATION SHALL NOT FLUSH SEDIMENT LADEN WATER INTO THE DOWNSTREAM SYSTEM.
8. STABILIZED CONSTRUCTION ENTRANCES SHALL BE INSTALLED AT THE BEGINNING OF CONSTRUCTION AND MAINTAINED FOR THE DURATION OF THE PROJECT. ADDITIONAL MEASURES MAY BE REQUIRED TO ENSURE THAT ALL PAVED AREAS ARE KEPT CLEAN FOR THE DURATION OF THE PROJECT.

GENERAL GRADING AND EROSION CONTROL:

1. CLEAN WASTE MATERIAL EXCAVATED FROM ROAD CUT OR TRENCHING AREAS NOT USED IN STREET FILL AREAS MAY BE SPREAD EVENLY ACROSS LOT AREAS IN DEPTHS NOT TO EXCEED SIX INCHES, EXCEPT WHERE NOTED OTHERWISE ON THE PLANS.
2. DURING CONSTRUCTION, STRAW BALES, CUTOFF TRENCHES OR SOME OTHER METHOD OF RUNOFF CONTROL SHALL BE USED TO PREVENT EROSION AND/OR SILTATION FROM CROSSING OUTSIDE THE WORK AREA BOUNDARIES.
3. LARGE ORGANIC MATERIAL, MISCELLANEOUS PIPE OR CONSTRUCTION MATERIAL MUST BE REMOVED FROM THE SITE AND DISPOSED OF PROPERLY.
4. NO FILLING OR CUTTING SHALL BE DONE OUTSIDE OF APPROVED GRADING AREAS.
5. ALL EROSION CONTROL FACILITIES SHALL MEET THE REQUIREMENTS OF THE CLACKAMAS COUNTY DEPARTMENT OF UTILITIES, EROSION PREVENTION AND SEDIMENT CONTROL PLANS TECHNICAL GUIDANCE HANDBOOK (ECTGH), REVISED AUGUST, 1994; CHAPTER 31 OF THE COMMUNITY DEVELOPMENT CODE; AND THE OREGON ADMINISTRATIVE RULES.

SEEDING/MULCHING:

1. ALL AREAS DISTURBED DURING CONSTRUCTION TO BE GRADED TO DRAIN AND COMPACTED TO A MINIMUM OF 90% OF AASHTO T-99 IMMEDIATELY AFTER INSTALLATION OF UTILITIES OR GRADING.
2. RECOMMENDED SEED MIXTURE: 80% ELKA DWARF PERENNIAL RYEGRASS AND 20% CREEPING RED FESCUE, BY WEIGHT. APPLICATION RATE SHALL BE 100 POUNDS MINIMUM PER ACRE.
3. FERTILIZER SHALL BE 12-16-8 WITH 50% OF THE NITROGEN DERIVED FROM UREA FORMALDEHYDE, AND APPLIED AT A RATE OF 400 POUNDS PER ACRE.
4. SEED AND MULCH AT A RATE OF 2000 LBS/AC WITH HEAVY BONDING AGENT OR NETTING AND ANCHORS. MULCH SHALL BE A WOOD CELLULOSE FIBER OR OTHER MATERIAL SUITABLE FOR HYDROMULCHING.
5. TEMPORARY OR PERMANENT HYDROSEEDING ARE ACCEPTABLE SEEDING AND MULCHING MUST BE PROVIDED WHENEVER PERENNIAL COVER CANNOT BE ESTABLISHED ON SITES WHICH WILL BE EXPOSED FOR 60 DAYS OR MORE.

SEDIMENT FENCE:

1. THE FILTER FABRIC SHALL BE PURCHASED IN A CONTINUOUS ROLL CUT TO THE LENGTH OF THE BARRIER TO AVOID USE OF JOINTS. WHEN JOINTS ARE NECESSARY, FILTER CLOTH SHALL BE SPLICED TOGETHER ONLY AT A SUPPORT POST, WITH A MINIMUM 6-INCH OVERLAP, AND BOTH ENDS SECURELY FASTENED TO THE POST.
2. THE FILTER FABRIC FENCE SHALL BE INSTALLED TO FOLLOW THE CONTOURS, WHERE FEASIBLE. THEN FENCE POSTS SHALL BE SPACED A MAXIMUM OF SIX FEET APART AND DRIVEN SECURELY INTO THE GROUND A MINIMUM OF 18 INCHES.
3. A TRENCH SHALL BE EXCAVATED, ROUGHLY 6 INCHES WIDE BY 6 INCHES DEEP, UPSLOPE AND ADJACENT TO THE WOOD POST TO ALLOW THE FILTER FABRIC TO BE BURIED. BURY THE BOTTOM OF THE FABRIC 6" VERTICALLY BELOW FINISHED GRADE. ALL AREAS OF FILTER FABRIC TRENCH SHALL BE COMPACTED.
4. THE FILTER FABRIC SHALL BE INSTALLED WITH STITCHED LOOPS OVER FENCE POSTS. THE FENCE POST SHALL BE CONSTRUCTED OF 2" X 2" FIR, PINE, OR STEEL. THE FENCE POST MUST BE A MINIMUM OF 48" LONG. THE FILTER FABRIC SHALL NOT BE STAPLED OR ATTACHED TO EXISTING TREES.
5. SEDIMENT FENCES SHALL BE REMOVED WHEN THEY HAVE SERVED THEIR USEFUL PURPOSE, BUT NOT BEFORE THE UPSLOPE AREA HAS BEEN PERMANENTLY STABILIZED.
6. SEDIMENT FENCES SHALL BE INSPECTED BY APPLICANT/CONTRACTOR IMMEDIATELY AFTER EACH RAINFALL, AND AT LEAST DAILY DURING PROLONGED RAINFALL. ANY REQUIRED REPAIRS SHALL BE MADE IMMEDIATELY.

AS-BUILT
DATE JMK 4-29-11

SFA Design Group, LLC
STRUCTURAL | CIVIL | LAND USE PLANNING
9020 SW Washington Square Dr. Suite 350
Portland, Oregon 97223
p: (503) 641-8311 f: (503) 643-7905
sfadesigngroup.com

CONSTRUCTION NOTES
CHINOOK TERRACE SUBDIVISION
WEST LINN, OREGON

VALID THROUGH 12-31-11

NO.	DATE	REVISION	BY
0	11/06/06	INITIAL SUBMITTAL	
1	03/19/07	REVISED PER CITY COMMENTS	
2	05/09/07	REVISED PER CITY COMMENTS	
3	05/28/07	REVISED PER CITY COMMENTS	
4	11/7/07	AS-BUILT REVISIONS	JDF
5	4/29/11	AS-BUILT REVISIONS	JMK

DESIGNED BY BEF DATE 9/06
DRAWN BY RMW DATE 9/06
REVIEWED BY BEF DATE 9/06
PROJECT NO. 271-001 REF.
SCALE 1" = 20'
N/A

SHEET 2 OF 13

PROJECT CHINOOK TERRACE
NO. 271-001
TYPE AS-BUILTS

dburnett, Plotted: May 23, 2011 - 9:16am, B:\Land Projects 2004\271-001\const mgmt\AS-BUILTS 4-27-11\10611_02ntsl.dwg

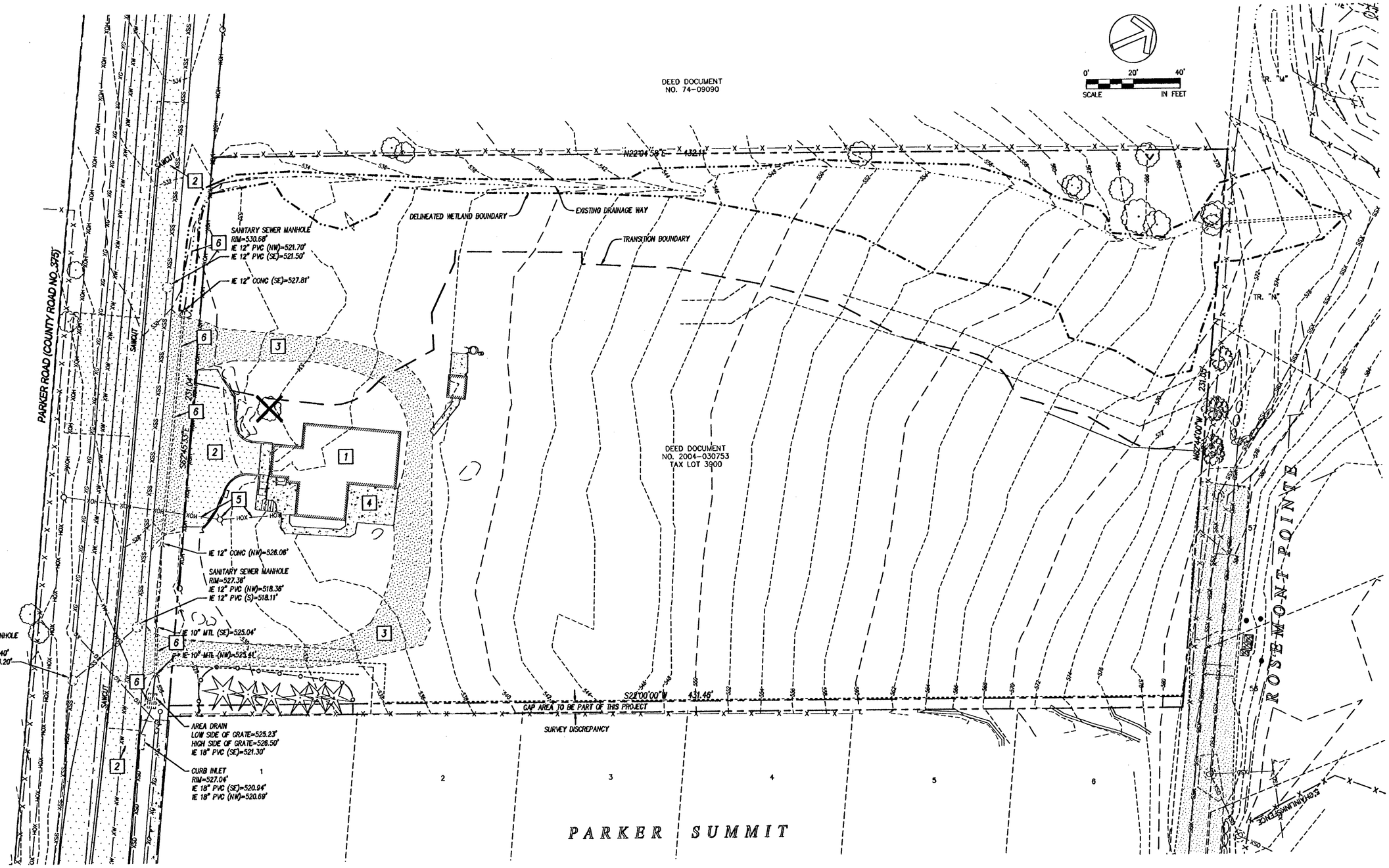

DEMOLITION NOTES

1. RESIDENCE TO BE DEMOLISHED, CONTRACTOR SHALL OBTAIN DEMOLITION PERMIT PRIOR TO ANY WORK DONE.
2. ASPHALT TO BE REMOVED, REMOVE WITHIN LIMITS OF SAWCUT, REFERENCE SH. 5 FOR LIMITS OF SAWCUT, AND REPAIR INFORMATION.
3. GRAVEL DRIVEWAY TO BE REMOVED.
4. CONCRETE SURFACE TO BE REMOVED.
5. OVERHEAD UTILITY TO BE REMOVED, CONTRACTOR TO COORDINATE DEMOLITION WITH APROPRIATE UTILITY.
6. DRAINAGE FEATURE/STRUCTURE TO BE REMOVED.

EXISTING CONDITIONS/DEMOLITION LEGEND

102	EXISTING 2' CONTOUR
110	EXISTING 10' CONTOUR
	TREE PROTECTION FENCING
	TREE TO BE SAVED
	TREE TO BE REMOVED
XSD	EXISTING STORM LINE & MANHOLE
XSS	EXISTING SANITARY LINE & MANHOLE
XW WV	EXISTING WATER LINE & VALVE
XG GV	EXISTING GAS LINE & VALVE
XOH	EXISTING OVERHEAD UTILITY LINE & POLE
XE	EXISTING UNDERGROUND ELECTRICAL LINE
X	EXISTING FENCE LINE

AS-BUILT
DATE JMK 4-29-11

SFA Design Group, LLC
STRUCTURAL | CIVIL | LAND USE PLANNING
9600 SW Washington Square Dr., Suite 260
Portland, Oregon 97223
p: (503) 641-4311 f: (503) 643-7065
sfadesigngroup.com

EXISTING CONDITIONS & DEMOLITION PLAN
CHINOOK TERRACE SUBDIVISION
WEST LINN, OREGON

REGISTERED PROFESSIONAL ENGINEER 54627PE OREGON JAN. 12, 2007 BRENT E. FOLTZ
VALID THROUGH 12-31-11

NO.	DATE	REVISION	BY
0	11/06/06	INITIAL SUBMITTAL	
1	03/19/07	REVISED PER CITY COMMENTS	
2	05/08/07	REVISED PER CITY COMMENTS	
3	05/28/07	REVISED PER CITY COMMENTS	
4	11/7/07	AS-BUILT REVISIONS	JDF
5	4/29/11	AS-BUILT REVISIONS	JMK

DESIGNED BY BEF DATE 9/06
DRAWN BY RMW DATE 9/06
REVIEWED BY BEF DATE 9/06
PROJECT NO. 271-001 REF: ____
SCALE 1"=20' ____
NA

SHEET 3 OF 13

PROJECT CHINOOK TERRACE
NO. 271-001
TYPE AS-BUILTS

dburnett, Plotted: May 23, 2011 – 9:16am, B:\Land Projects 2004\271-001\const mgmt\AS-BUILTS 4-27-11\10611_03xcon.dwg

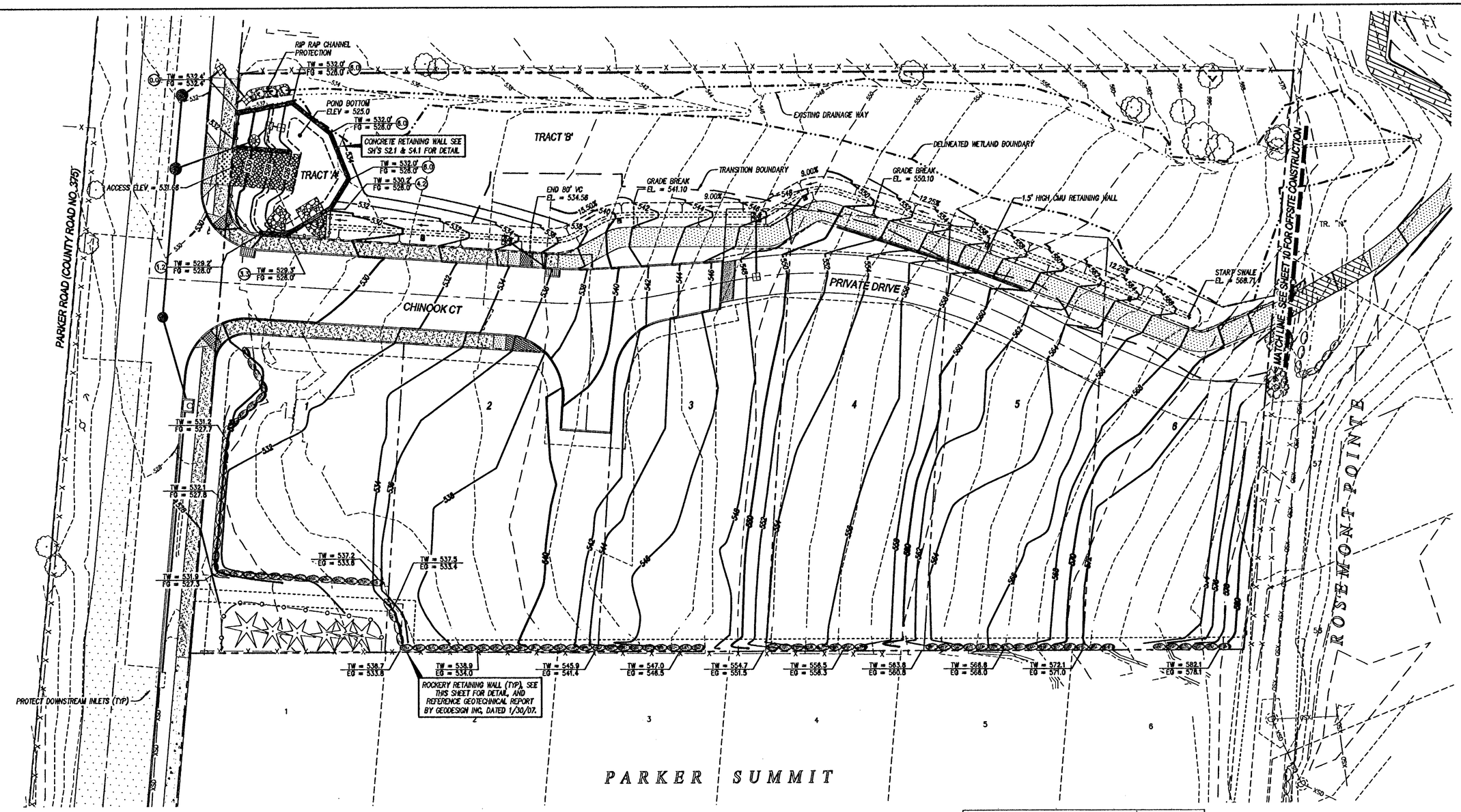

AS-BUILT
DATE MHH 03-02-2011

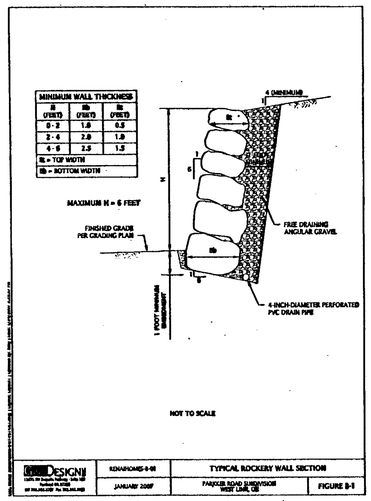

0' 20' 40'
SCALE IN FEET

GRADING LEGEND

- 100 — EXISTING 1' CONTOUR
- 105 — EXISTING 10' CONTOUR
- 201 — PROPOSED 1' CONTOUR
- 205 — PROPOSED 5' CONTOUR
- TREE PROTECTION FENCING
- CONCRETE RETAINING WALL
- ROCKERY RETAINING WALL
- PROPOSED STORM DRAIN LINE

SFA Design Group, LLC
STRUCTURAL | CIVIL | LAND USE PLANNING
9600 SW Washington Square Dr., Suite 300
Portland, Oregon 97223
p: (503) 641-8311 f: (503) 643-7006
sfadesigngroup.com

GRADING PLAN
CHINOOK TERRACE SUBDIVISION
WEST LINN, OREGON

REGISTERED PROFESSIONAL ENGINEER — OREGON — MAY 12, 2004 — BRENT E. FITZ

VALID THROUGH 12-31-11

NO.	DATE	REVISION	BY
0	11/06/06	INITIAL SUBMITTAL	
1	03/16/07	REVISED PER CITY COMMENTS	
2	05/09/07	REVISED PER CITY COMMENTS	
3	05/28/07	REVISED PER CITY COMMENTS	
4	02/24/07	AS-BUILT REVISIONS	MHH
5	4/29/11	AS-BUILT REVISIONS	MK

DESIGNED BY BEF DATE 9/06
DRAWN BY RMW DATE 9/06
REVIEWED BY BEF DATE 9/06
PROJECT NO. 271-001 REF.
SCALE 1"=20' N/A

SHEET 4 OF 13

PROJECT CHINOOK TERRACE
NO. 271-001
TYPE AS-BUILTS

dburnett, Plotted: May 23, 2011 - 8:17am, B:\Land Projects 2004\271-001\const mgmt\AS-BUILTS 4-27-11\10611_Dfgrad.dwg

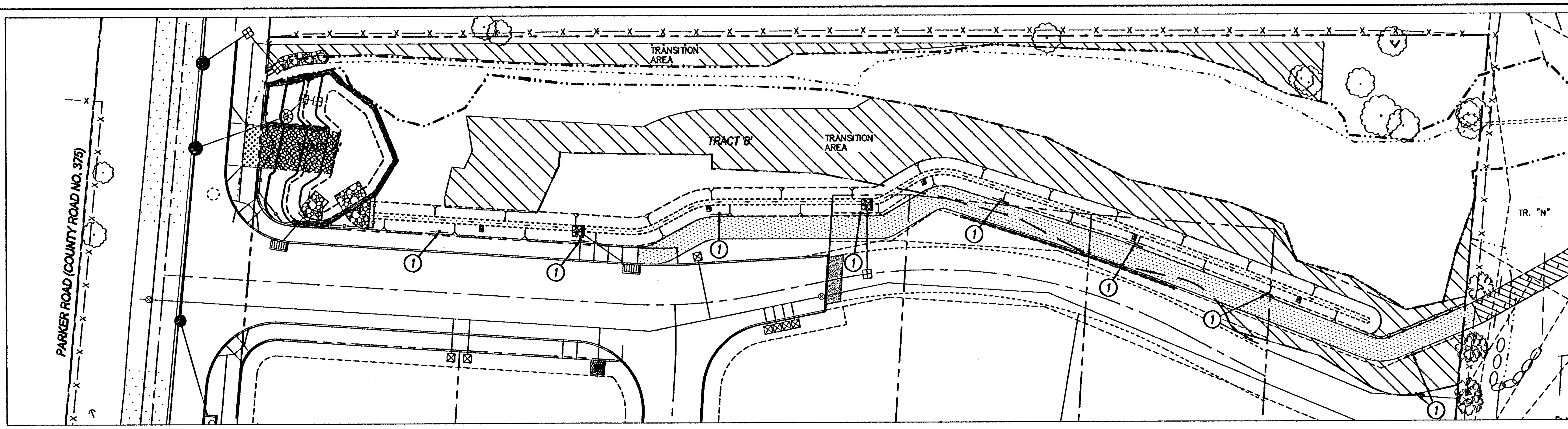

PART 1 GENERAL

1.01 DESCRIPTION: Furnish all materials, equipment, and labor necessary for the completion of planting as indicated on drawings and specified hereinafter. Work includes, but is not limited to site preparation, planting and seeding, fertilizing, mulching, maintenance and guarantee of planted areas.

1.02 QUALITY ASSURANCE/GUARANTEE: All plant material and planting locations are to be approved by a wetland biologist or mitigation specialist from Schott & Associates (hereinafter referred to as Schott) prior to planting. During planting, Schott is to be on-site.

Plant substitution is not permitted. The seed mix specified in the plant schedule is to be adhered to and used for all areas designated.

All plant material is to be guaranteed for a full year from the date of planting. Any planted material (woody, herbaceous, or seeded) which proves to be other then specified or is not in vigorous condition within a period of one year from acceptance of the work will be replaced by the Contractor without cost to the Owner. An 80% minimum survival rate is expected after five years.

Furnish certificate of compliance with indicated seed mixture and any certificates of inspection and compliance as required by Federal and State laws and regulation for plant and soil additives.

1.03 SITE CONDITIONS/DAMAGE/CLEANUP: A filter fabric fence is also to be placed between the existing wetlands and construction areas. The fence will remain in place until planted vegetation is established as determined by Schott and/or the permitting agency. Once the vegetation is established the filter fabric fence shall be removed.

Locate all underground utilities prior to digging or driving stakes.

Any existing buildings, equipment, underground utilities, walks, roads, and/or forms damaged by the Contractor are to be replaced and/or repaired at the Contractor's expense, in a manner satisfactory to the Owner's Representative before final payment is made.

The Contractor is to be responsible for keeping planted areas free of debris, rock, and sand throughout the course of the work. Upon completion of the contract, the Contractor's to remove all surplus material, equipment, and debris from the site. All planted areas are to be rake-clean.

1.04 MAINTENANCE: Maintenance is to include regular visits at least monthly to the project site for the purpose of weeding, supplemental watering, and other items necessary to maintain planted areas in a healthy condition. Weeding is to consist only of cleared and mulched areas maintained around each woody plant, and removal of exotic species such as blackberries, Scot's Broom, or others as determined from the resorted or created wetland areas. No spraying of herbicides or other chemicals, or application of fertilizer (other than noted on the plan), is to occur within the mitigation wetland areas without specific direction from Schott. No pruning is to occur unless authorized by Schott and/or the permitting agency. The maintenance period shall be for two years following the completion date of planting as determined by Schott and/or the permitting agency.

1.05: Irrigation shall be done on an as needed basis. Any temporary irrigation system will be removed following the second growing season.

1.06 SCHEDULE: Any earthwork must be approved by the project representative prior to commencement of such work. At that time, it will be determined what extra measures, if any, should be taken to prevent damage due to earthwork in saturated soils.

Planting is to occur during the cool season months (November to March) to take advantage of seasonal rains and the greater availability of plant material. Other planting time, if authorized, may require plant substitutions and supplemental irrigation.

1.06 EXISTING VEGETATION: Protect all existing vegetation designated to remain. Any existing vegetation damaged by Contractor will be replaced with plants of equal or better size and condition at contractor's expense.

PART 2 PRODUCTS

2.01 PLANT MATERIALS: Plant materials are to conform to Standards and Regulations as specified. Rooted plants are to be first quality, well-foliated, with well-developed root systems, and normal well-shaped trunks, limbs, stems, and heads. Schott will approve for quality conformance. All rooted plant material is to be labeled by genus, species and variety. Plants deemed unsuitable may be rejected before or after delivery. All plant material is to be free from damage, disease, insects, insect eggs and larvae.

2.02 SOIL AMENDMENTS: Soil amendment is to consist of screened mill-run fir and/or hemlock sawdust blended with composted manure or air digested sewage sludge. The blended ingredients are to be composted to a minimum of one year. Bassett Western Fertil - Mulch or approved equal.

Mulch is to consist of shredded wood and/or bark.

Fertilizer for tree and shrub plantings is to be in 21 - gram tablet form and contain 20% nitrogen, 10% phosphoric acid and 5% potash.

2.03 SEEDING MATERIALS: If hydroseeding, use seed mix as indicated in specifications, wood cellulose fiber from Douglas Fir or Western hemlock dyed to facilitate placement, and non-toxic, biodegradable J-TAC or approved equal.

If broadcast seeding, use seed mix as directed.

PART 3 EXECUTION

3.01 PREPARATION FOR PLANTING: Remove topsoil to 12-inch depth from upland and wetland areas to be disturbed to wetland mitigation. Stockpile the topsoil, which does not have reed canary grass, and remove the reed canary grass contaminated topsoil from the wetland area.

3.02 EARTHWORK: Perform earthwork as necessary to achieve elevations as described, with sufficient excavation to allow placement of 12 inches of stockpiles topsoil.

Following major earthwork, confirm with Schott the subgrades are approved before redistributing stockpiled soils over the restored wetland area.

Rototill or use other approved means, thoroughly blending topsoil and subsoil to reduce interface, to a minimum depth of six inches into subgrade. Compact soils to 75-85% density. Remove all surface rocks over 6 inches in any dimension. Grades must be even and smooth, and relate to adjacent surfaces as indicated.

3.03 PLANT INSTALLATION: Plant per specified scheduling and after all major construction is complete. Orient plants as directed for best appearance. Plant as shown on detail drawings.

3.04 SCALPING: A 30 inch diameter circle will be scalped for each woody plant. The plant will be installed in the middle of the circle. For non-root sprouting species some form of weed barrier will be installed around each plant. 2-4 inches of mulch will be placed on top of the weed barrier. For the root sprouting species the weed barrier shall not be installed, but the mulch layer is required.

3.05 STAKING: Since the survivorship of each woody species needs to be determined, a color coded stake shall be placed adjacent to each plant, or planting group. The number of plants per grouping shall be noted and provided to Schott. In addition, the color codes shall be provided to Schott to assist with the monitoring efforts. The larger trees will be staked to provide support.

3.07 SEEDING: For hydroseeding or broadcast seeding of the wetland mitigation and buffer areas, use the rate specified on the mitigation plans of the seed mix per acre.

3.08 IRRIGATION: The woody plants within the mitigation area shall be irrigated for the first growing season following planting. The irrigation can be by hand, drip or sprinklers.

3.09 FINAL ACCEPTANCE AND INSPECTION: Following completion of all the above items and with Schott's approval, a pre-warranty acceptance of the project will be granted. From this date forward, for a period of one year, the landscape planting warranty will be in effect. All maintenance as indicated of seeded and planted areas during the guarantee period will be by the contractor and will include items as indicated to fully establish all seeded and planted areas to a healthy vigorous state.

VEGETATED CORRIDOR LEGEND

TRANSITION AREA (7,665 SF)

(1) SENSITIVE AREA MARKERS

PLAN IS BASED UPON THE REPORT DONE BY SCHOTT AND ASSOCIATES, 9/8/06.

TRANSITION AREA (7,665 SF/0.18 ACRES)

	COMMON TREE NAME / SCIENTIFIC NAME	WATER REQUIREMENTS	LIGHT REQUIREMENTS	MIN. ROOTING SIZE	MIN. PLANT HEIGHT	ON CENTER/ SEEDING RATE	SPACING FORMAT
25	DOUGLAS FIR / PSEUDOTSUGA MENZIESII	DRY	SUN	2 GAL.	3'	12'	SINGLE
25	RED ALDER / ALNUS RUBRA	MOIST	SUN	2 GAL.	2'	12'	SINGLE
20	BIG-LEAF MAPLE / ACER MACROPHYLLUM	DRY	SUN	2 GAL.	3'	12'	SINGLE
	SHRUBS						
50	HAZELNUT / CORYLUS CORNUTA	DRY	PART	1 GAL.	2"	8'	CLUSTER
140	SNOWBERRY / SYMPHORICARPOS ALBA	DRY	PART	1 GAL.	1.5'	4'	CLUSTERS OF 15
24	INDIAN PLUM / OEMLERIS CERASIFORMIS	MOIST	SHADE	2 GAL.	2'	8'	SINGLE
215	SALAL / GAULTHERIA SHALLON	MOIST	PART	1 GAL.	4"	VARIABLE	CLUSTERS OF 5
	SEED MIXTURE						
N/A	NATIVE CALIFORNIA BROME / BROMUS CARINATUS	DRY	SUN	SEEDS	N/A	15-30 LBS /ACRE	MASS
N/A	BLUE WILDRYE / ELYMUS GLAUCUS	DRY	PART	SEEDS	N/A	15-30 LBS /ACRE	MASS
N/A	LUPINE / LUPINUS ALBICAULUS	DRY	SUN	SEEDS	N/A	15-30 LBS /ACRE	MASS
N/A	WESTERN YARROW / ACHILLEA MILLEFOLIUM	DRY TO MOIST	PART	SEEDS	N/A	15-30 LBS /ACRE	MASS

AS-BUILT

DATE JMK 4-29-11

GRAPHIC SCALE

(IN FEET) 1 inch = 20 ft.

sfa Design Group, LLC

STRUCTURAL | CIVIL | LAND USE PLANNING

WETLAND REVEGETATION PLAN

CHINOOK TERRACE SUBDIVISION

WEST LINN, OREGON

REGISTERED PROFESSIONAL ENGINEER, OREGON, BRENT E. ...

VALID THROUGH 12-31-11

NO.	DATE	REVISION	BY
0	11/06/06	INITIAL SUBMITTAL	
1	03/19/07	REVISED PER CITY COMMENTS	
2	05/09/07	REVISED PER CITY COMMENTS	
3	05/28/07	REVISED PER CITY COMMENTS	
4	11/7/07	AS-BUILT REVISIONS	JDF
5	4/29/11	AS-BUILT REVISIONS	JMK

DESIGNED BY BEF DATE 9/06
DRAWN BY RMW DATE 9/06
REVIEWED BY BEF DATE 9/06
PROJECT NO. 271-001 REF. ___
SCALE 1" = 20'
N/A

SHEET 4A OF 13

PROJECT CHINOOK TERRACE
NO. 271-001
TYPE AS-BUILTS

dburnett, Plotted: May 23, 2011 - 9:17am, B:\Land Projects 2004\271-001\const mgmt\AS-BUILTS 4-27-11\10611_04Awtq2.dwg

STORM LATERAL DATA

LOT NO.	LENGTH	SIZE	MATERIAL	INV. EL. @ OUTFALL	INV. EL. @ PLUG	SLOPE	DEPTH @ PLUG
1	49.5'	4"	ASTM D 3034 PVC	528.98	527.00	0.0200	3.60
2	49.3'	4"	CLASS 52 DIP	530.38	528.97	0.0200	4.90
3	52.3'	4"	CLASS 52 DIP	548.38	541.27	0.0200	4.50
4	41.4'	4"	CLASS 52 DIP	547.68	546.72	0.0200	3.65
5	33.5'	4"	CLASS 52 DIP	556.08	556.57	0.0200	3.60
6	42.0'	4"	CLASS 52 DIP	563.90	564.64	0.0200	4.60

DEED DOCUMENT NO. 74-09090

CONSTRUCTION NOTES

1. STA. 11+98.72, CL DRIVEWAY, CONSTRUCT COMMERCIAL DRIVEWAY APPROACH PER WL-504.
2. 15' WIDE GRAVEL POND ACCESS ROAD. ROAD SECTION TO BE 12" 1 1/2" COMPACTED CRUSHED ROCK OVER GEO-TEXTILE FABRIC.
3. INSTALL 5' WATER QUALITY FENCE & GATE PER WL-618.
4. 6" REINFORCED SIDEWALK WITH 10 GA WWM 1.5" ABOVE BASE.
5. CONSTRUCT HEADWALL & OUTFALL PER WL-613 & WL-614.
6. CONSTRUCT WEIR & OUTFALL PER DETAIL THIS SHEET.
7. CONSTRUCT 1.5' WIDE RIP-RAP SPLASH PAD TO SWALE BOTTOM.
8. CONSTRUCT 4'x4' WIDE RIP-RAP SPLASH PAD TO SWALE BOTTOM.

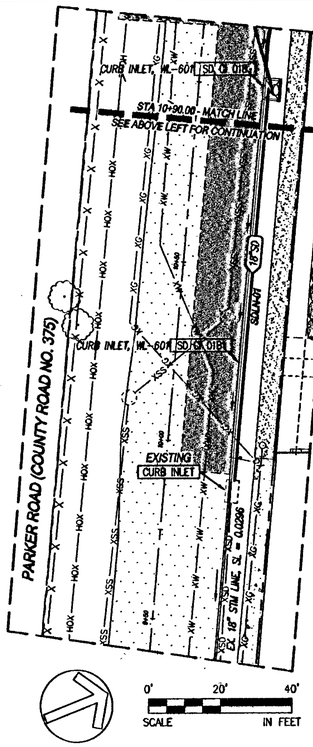

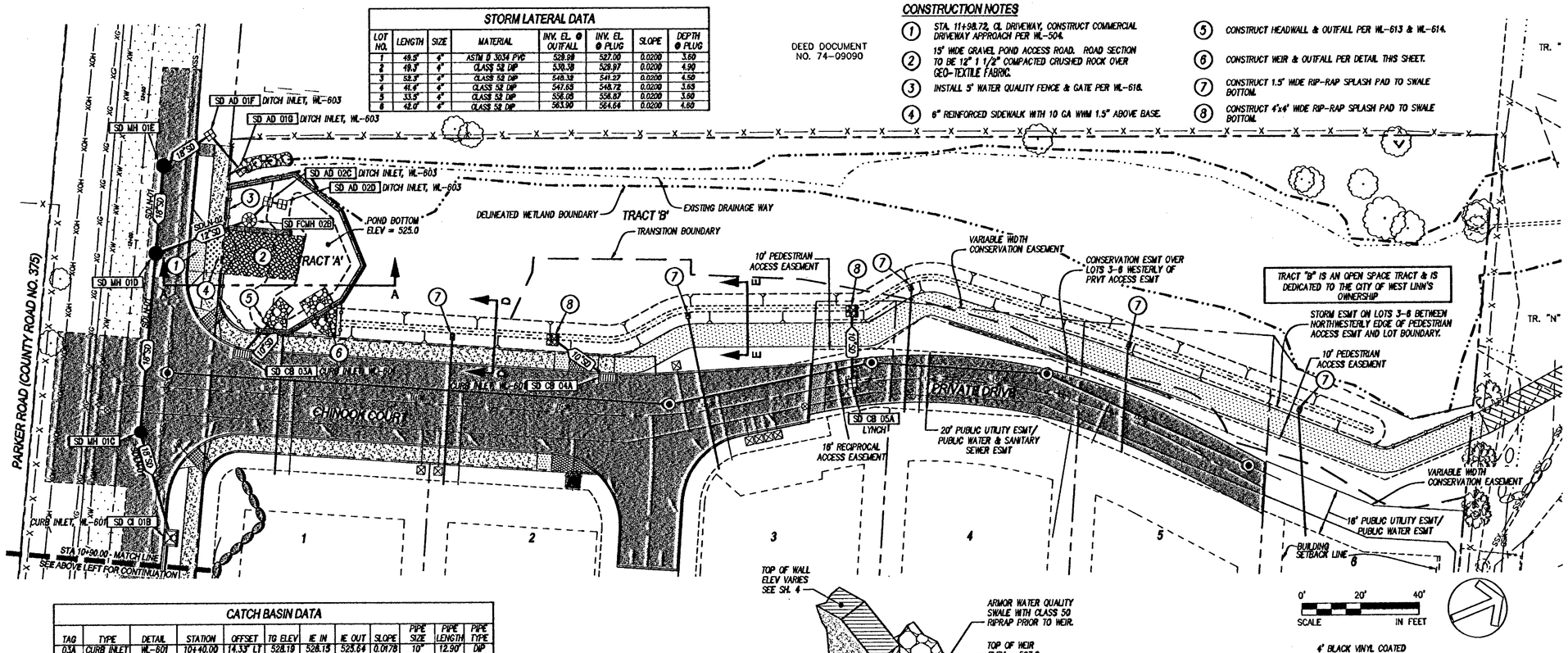

CATCH BASIN DATA

TAG	TYPE	DETAIL	STATION	OFFSET	TG ELEV	IE IN	IE OUT	SLOPE	PIPE SIZE	PIPE LENGTH	PIPE TYPE
03A	CURB INLET	WL-601	10+40.00	14.33' LT	528.19	528.15	525.64	0.0178	10"	12.90'	DIP
04A	CURB INLET	WL-601	13+85.00	14.00' RT	538.11	---	533.87	0.0199	10"	20.60'	DIP
05A	LYNCH	SEE SH. 12	10+87.00	14.00' LT	548.47	---	548.47	0.0373	10"	22.50'	DIP
01G	INLET	WL-603	12+28.73	33.50' RT	531.64	---	528.40	0.0850	18"	18.10'	DIP

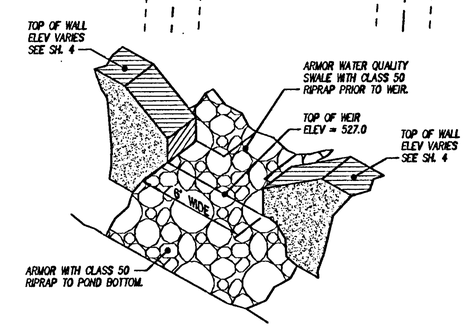

WATER QUALITY WEIR
N.T.S.

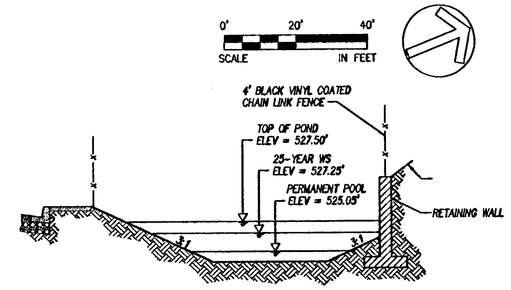

DETENTION POND (TR. "A") SECTION A-A
N.T.S.

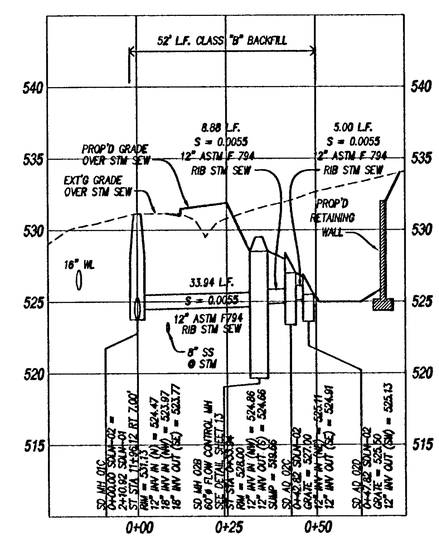

SDLN-02 (PUBLIC) - PROFILE
SCALE: H: 1" = 20' V: 1" = 5'

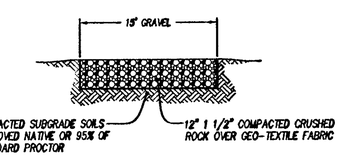

POND ACCESS - TYPICAL SECTION
N.T.S.

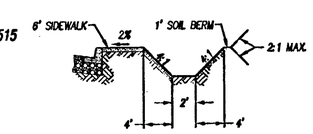

WATER QUALITY SWALE SECTION "D-D"
N.T.S.

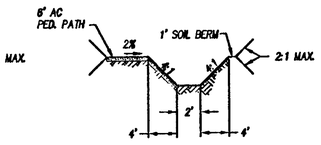

WATER QUALITY SWALE SECTION "E-E"
N.T.S.

AS-BUILT
DATE JMK 4-29-11

SFA Design Group, LLC
STRUCTURAL | CIVIL | LAND USE PLANNING
9020 SW Washington Square Dr. Suite 360
Portland, Oregon 97223
p: (503) 641-8511 f: (503) 643-7005
sfadesigngroup.com

WATER QUALITY, DETENTION & STORM PLAN
CHINOOK TERRACE SUBDIVISION
WEST LINN, OREGON

REGISTERED PROFESSIONAL ENGINEER — OREGON — GREGORY E. FITZ — 12-31-11
VALID THROUGH 12-31-11

NO.	DATE	REVISION	BY
0	11/06/06	INITIAL SUBMITTAL	
1	03/19/07	REVISED PER CITY COMMENTS	
2	05/09/07	REVISED PER CITY COMMENTS	
3	05/29/07	REVISED PER CITY COMMENTS	JDF
4	11/7/07	AS-BUILT REVISIONS	JMK
5	4/29/11	AS-BUILT REVISIONS	

DESIGNED BY BEE DATE 9/06
DRAWN BY RMM DATE 9/06
REVIEWED BY BEF DATE 9/06
PROJECT NO. 271-001 REF.
SCALE 1"=20' / N/A

SHEET 5 OF 13

PROJECT CHINOOK TERRACE
NO. 271-001
TYPE AS-BUILTS

dburnett, Plotted: May 23, 2011 - 9:18am, B:\Land Projects 2004\271-001\const mgmt\AS-BUILTS 4-27-11\10611_05strlg1.dwg

CENTERLINE CURVE DATA

1	2	3
Δ = 15°07'15"	Δ = 39°07'02"	Δ = 5°44'56"
R = 185.00	R = 185.00	R = 185.00
T = 24.55	T = 65.72	T = 9.29
L = 48.82	L = 126.30	L = 18.58

SANITARY LATERAL DATA

LOT NO.	D.S. M.H.	DIST. FROM D.S. MH	LENGTH	SIZE	MATERIAL	INV. EL. @ MAINLINE	INV. EL. @ PLUG	SLOPE	DEPTH @ PLUG
1	A1	43.64'	33.15'	4"	ASTM D 3034 SDR-35	522.48	523.88	0.0200	8.30
2	A1	101.24'	32.00'	4"	ASTM D 3034 SDR-35	523.68	524.67	0.0200	8.37
3	A2	17.18'	33.00'	4"	ASTM D 3034 SDR-35	528.63	533.48	0.2000	8.58
4	A3	17.02'	16.00'	4"	ASTM D 3034 SDR-35	541.98	542.78	0.0500	8.60
5	A4	0.00'	38.70'	4"	ASTM D 3034 SDR-35	548.35	551.50	0.1500	7.00
6	A4	0.00'	10.00	4"	ASTM D 3034 SDR-35	548.35	558.09	0.1200	7.90

CURB RETURN DATA

CURVE DATA	TOP OF CURB ELEVATION		STREET STATION	CURVE DATA	TOP OF CURB ELEVATION		STREET STATION
1	PC	528.72	PC = 10+43.99, 14.00' LT CHINOOK CT	2	PC	527.95	PC = 11+12.67, 18.00' RT PARKER RD
	1/4 Δ	528.88			1/4 Δ	528.32	
Δ = 91°25'49"	1/2 Δ	529.53		Δ = 88°34'11"	1/2 Δ	528.91	
R = 25.00	3/4 Δ	530.32	PT = 11+90.69, 18.00' RT PARKER RD	R = 25.00	3/4 Δ	529.48	PT = 10+42.04, 14.00' RT CHINOOK CT
T = 25.63	PT	530.83		T = 24.38	PT	529.70	
L = 39.89				L = 38.65			
3	PC	535.73	PC = 11+47.38, 14.00' RT CHINOOK CT	4	PC	540.77	PC = 10+29.02, 10.00' LT HAMMERHEAD
	1/4 Δ	536.92			1/4 Δ	540.76	
Δ = 90°00'00"	1/2 Δ	538.40		Δ = 74°52'45"	1/2 Δ	541.41	
R = 25.00	3/4 Δ	539.72	PT = 10+39.99, 10.00' RT HAMMERHEAD	R = 25.00	3/4 Δ	542.57	PT = 12+08.88, 10.02' RT CHINOOK CT
T = 25.00	PT	540.43		T = 19.14	PT	543.77	
L = 39.27				L = 32.67			

WATERLINE CONSTRUCTION NOTES

1. LIVE TAP EXT'G 16" WATERLINE INSTALL (1) 6" GATE VALVE, (1) 6"x16" REDUCER, CONTRACTOR TO VERIFY PIPE SIZE AND LOCATION. NOTIFY ENGINEER OF ANY DISCREPANCY PRIOR TO LIVE TAP.
2. STA. 11+55.00, 23.00' RT, INSTALL FIRE HYDRANT ASSEMBLY, WITH 5'x5'x4" CONCRETE PAD.
3. INSTALL 1" WATER SERVICE (TYP.)
4. INSTALL IRRIGATION METER FOR WATER QUALITY FACILITY, WITH APPROVED BACKFLOW PREVENTION.
5. INSTALL 22.50° BEND W/RESTRAINT JOINT.
6. INSTALL 6" GATE VALVE PER CITY STANDARDS.

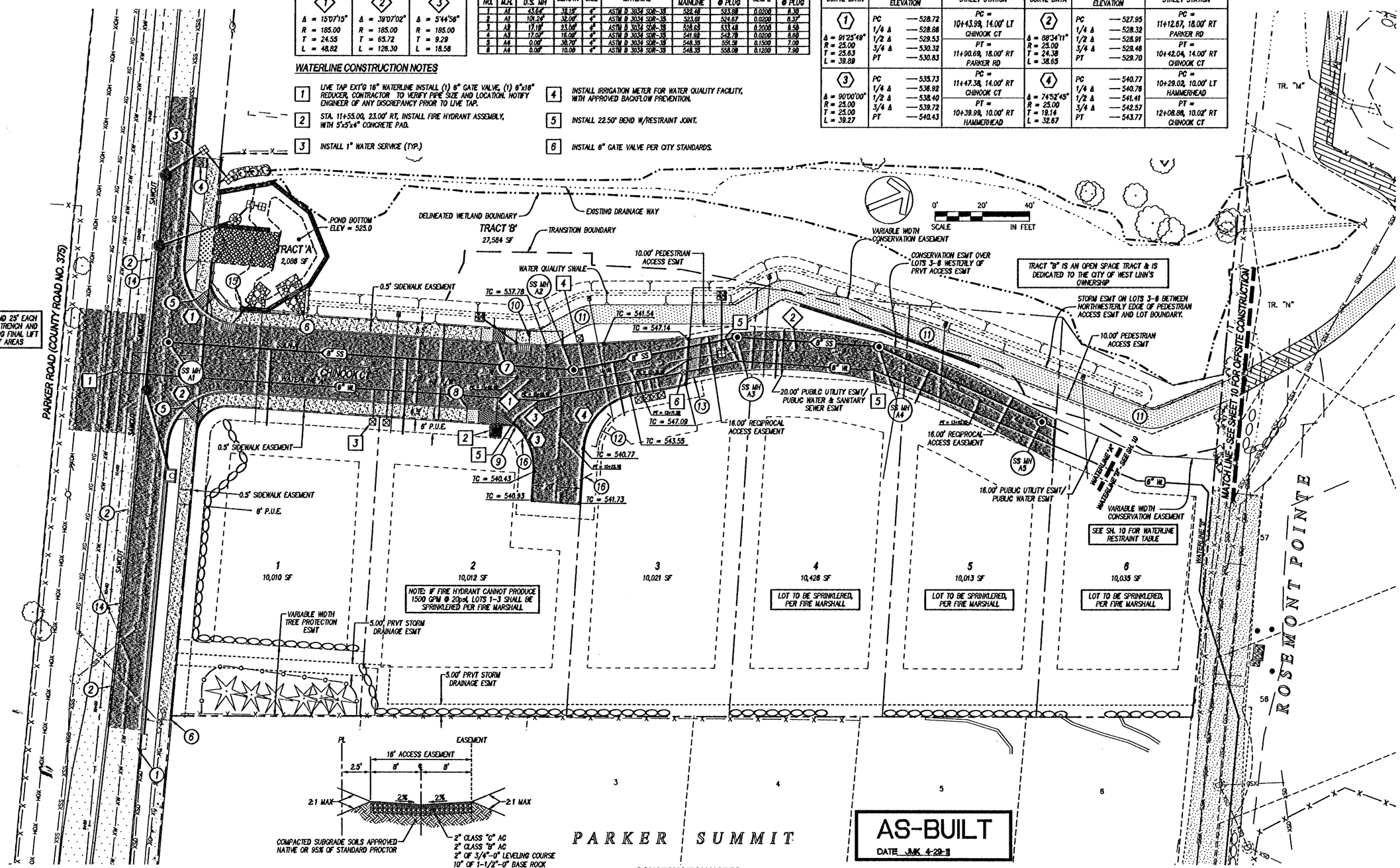

PRIVATE DRIVE - STA. 13+32.95 TO STA. 14+15.73

N.T.S.

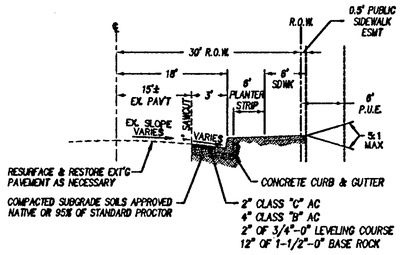

PARKER ROAD - STA. 10+00.00 TO STA. 12+35.75

N.T.S.

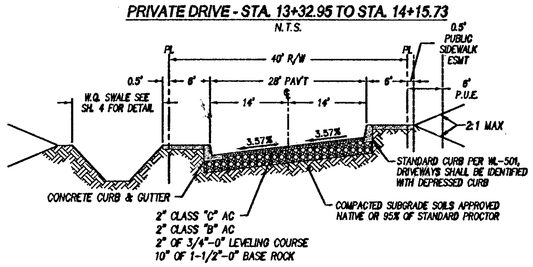

CHINOOK CT (STA 10+00.00 TO STA. 12+35.70) - TYPICAL SECTION

N.T.S.

CONSTRUCTION NOTES

1. STA 9+84.38, 17.18' RT, BEGIN SAWCUT, PROTECT CATCHBASIN, MATCH EXT'G CONDITIONS.
2. NEW PAVEMENT & SAWCUT IN PARKER ROAD IS SHOWN FOR REFERENCE ONLY, RESURFACE & RESTORE EXT'G PAVEMENT AS NECESSARY
3. STA. 12+38.23, 17.46' RT, END SAWCUT, TAPER PAVEMENT TO EXT'G EDGE OF ROAD, MATCH EXT'G
4. STA. 12+33.75, 27.00' RT, END SIDEWALK, 4' AC CONNECTION TO STREET PER CITY STANDARDS.
5. CONSTRUCT CURB RAMPS PER WL-507A & ADA STANDARDS.
6. STA. 9+97.38, 30.50' RT, MEET & MATCH EXT'G SIDEWALK.
7. STA. 11+53.75, CL RAMP, CONSTRUCT RAMP PER WL-508.
8. STA. 11+42.38 14.00' RT, BEGIN SIDEWALK TERMINATION RAMP, TEXTURE PER WL-508.
9. STA. 11+63.34, 20.50' RT, END TYPICAL SECTION & SIDEWALK.
10. STA. 11+67.10, 14.46' LT, END SIDEWALK BEGIN 8' AC PEDESTRIAN PATH.
11. CONSTRUCT 8' AC PEDESTRIAN/BICYCLE PATH, 3" AC OVER 4" OF 3/4-0" CRUSHED ROCK, TAMP AND BEVEL EDGE OF AC.
12. BANK WATER METERS FOR LOTS 3-6.
13. CONSTRUCT 5' CONCRETE APRON, 6" REINFORCED CONCRETE WITH 10 GA WWM 1.5" ABOVE BASE.
14. RESTORE EXT'G STRIPING PER CITY STANDARDS.
15. INSTALL STOP SIGN & STREET NAME SIGN
16. INSTALL "NO PARKING" SIGNS 50' O.C. OR AS REQUIRED BY THE CITY.

STREET AND UTILITY LEGEND

EXT'G SIDEWALK	PROP'D STORM LINE & MANHOLE
PROP'D SIDEWALK	PROP'D SANITARY LINE & MANHOLE
PROP'D CURB	PROP'D WATERLINE & VALVE
SAWCUT LINE	EXT'G STORM LINE & MANHOLE
EXT'G PAVEMENT	EXT'G SANITARY LINE & MANHOLE
PROP'D PAVEMENT	EXT'G WATER LINE & VALVE

SFA Design Group, LLC
STRUCTURAL | CIVIL | LAND USE PLANNING
9600 SW Washington Square Dr. Suite 200
Portland, Oregon 97223
ph (503) 641-8611 f: (503) 643-7005
sfadesigngroup.com

STREET, SANITARY SEWER & WATERLINE PLAN
CHINOOK TERRACE SUBDIVISION
WEST LINN, OREGON

REGISTERED PROFESSIONAL ENGINEER — OREGON — BRENT E. FILTY — VALID THROUGH 12-31-11

NO.	DATE	REVISION	BY
0	11/06/06	INITIAL SUBMITTAL	
1	03/19/07	REVISED PER CITY COMMENTS	
2	05/09/07	REVISED PER CITY COMMENTS	
3	05/28/07	REVISED PER CITY COMMENTS	
4	11/7/07	AS-BUILT REVISIONS	JDF
5	4/29/11	AS-BUILT REVISIONS	MMK

DESIGNED BY BEF DATE 9/06
DRAWN BY RMW DATE 9/06
REVIEWED BY BEF DATE 9/06
PROJECT NO. 271-001 REF.
SCALE 1"=20' N/A

SHEET 6 OF 13

PROJECT CHINOOK TERRACE
NO. 271-001
TYPE AS-BUILTS

dburnett, Plotted: May 23, 2011 - 8:18am, B:\Land Projects 2004\271-001\const mgmt\AS-BUILTS 4-27-11\0611_Dbsdrt.dwg

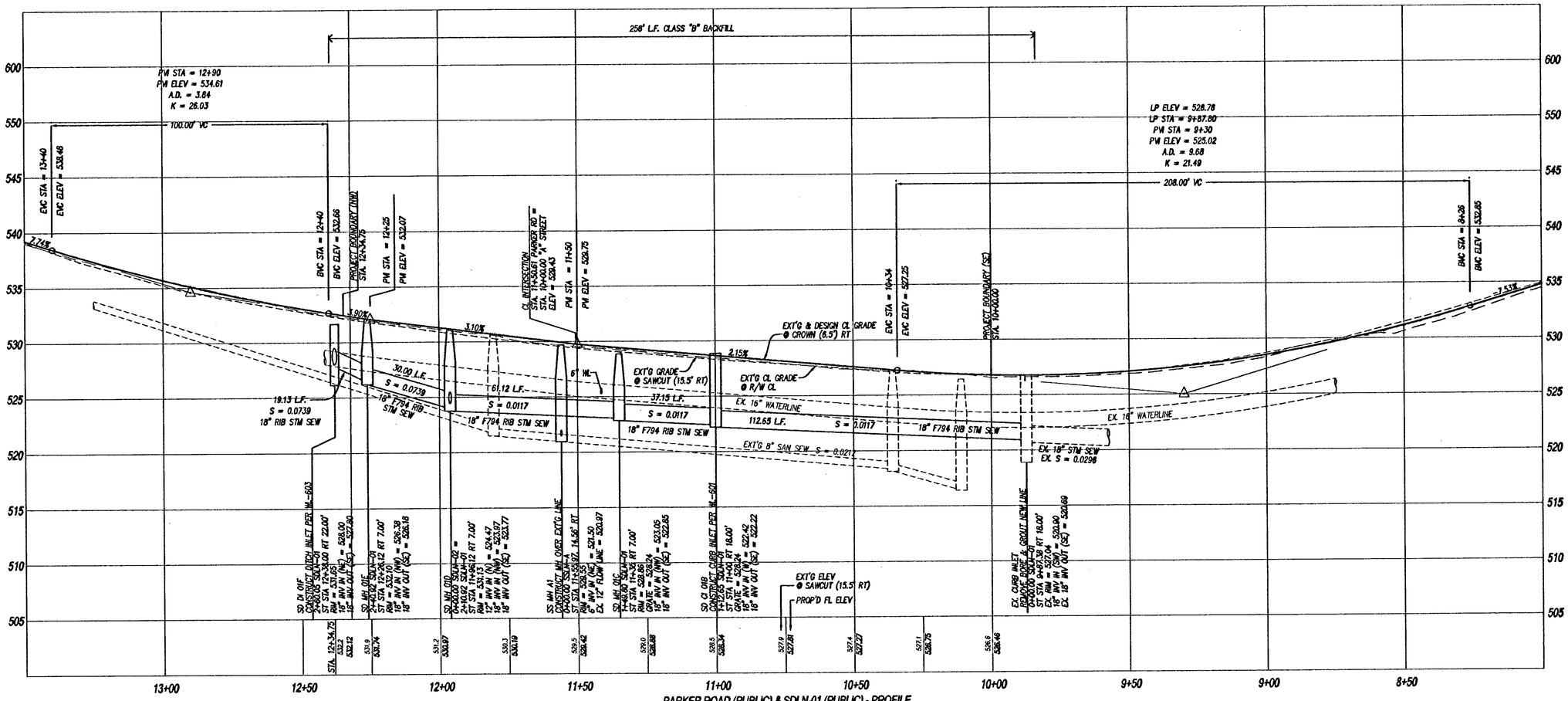

PARKER ROAD (PUBLIC) & SDLN-01 (PUBLIC) - PROFILE

SCALE: H: 1" = 20' V: 1" = 8'

AS-BUILT

DATE JMK 4-29-11

SFA Design Group, LLC
STRUCTURAL | CIVIL | LAND USE PLANNING
9020 SW Washington Square Dr. Suite 380
Portland, Oregon 97223
p: (503) 641-5311 f: (503) 643-7005
sfadesigngroup.com

STREET & UTILITY PROFILES

CHINOOK TERRACE SUBDIVISION

WEST LINN, OREGON

REGISTERED PROFESSIONAL ENGINEER — OREGON — JAN. 12, 1982 — BRENT E. FITTY

VALID THROUGH 12-31-11

NO.	DATE	REVISION	BY
0	11/06/06	INITIAL SUBMITTAL	
1	02/19/07	REVISED PER CITY COMMENTS	
2	05/09/07	REVISED PER CITY COMMENTS	
3	05/28/07	REVISED PER CITY COMMENTS	
4	11/7/07	AS-BUILT REVISIONS	JDF
5	4/29/11	AS-BUILT REVISIONS	JMK

DESIGNED BY BEF DATE 9/06
DRAWN BY RMW DATE 9/06
REVIEWED BY BEF DATE 9/06
PROJECT NO. 271-001 REF. ____
SCALE 1"=20' ____
N/A

SHEET 7 OF 13

PROJECT CHINOOK TERRACE
NO. 271-001
TYPE AS-BUILTS

dburnett, Plotted: May 23, 2011 - 9:19am, B:\Land Projects 2004\271-001\const mgmt\AS-BUILTS 4-27-11\10611_07prof.dwg

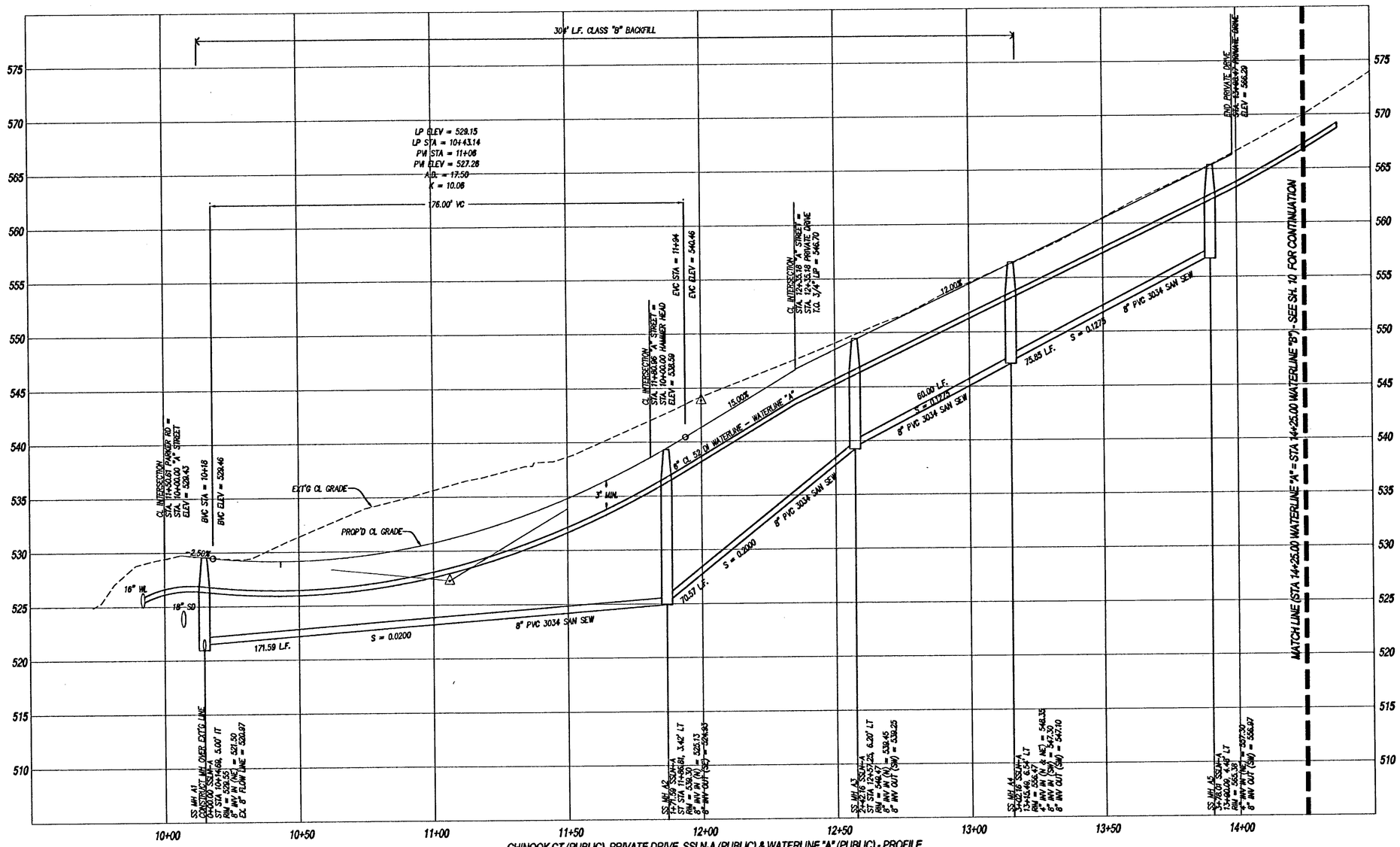

CHINOOK CT (PUBLIC), PRIVATE DRIVE, SSLN-A (PUBLIC) & WATERLINE "A" (PUBLIC) - PROFILE

SCALE: H: 1" = 20' V: 1" = 5'

AS-BUILT

DATE JMK 4-29-11

SFA Design Group, LLC
STRUCTURAL | CIVIL | LAND USE PLANNING
9020 SW Washington Square Dr. Suite 360
Portland, Oregon 97223
p: (503) 641-8311 f: (503) 643-7005
sfadesigngroup.com

STREET & UTILITY PROFILES

CHINOOK TERRACE SUBDIVISION

WEST LINN, OREGON

REGISTERED PROFESSIONAL ENGINEER — OREGON — MAR. 12, 2010 — BRENT E. FITZ

VALID THROUGH 12-31-11

NO.	DATE	REVISION	BY
0	11/06/06	INITIAL SUBMITTAL	
1	03/19/07	REVISED PER CITY COMMENTS	
2	05/09/07	REVISED PER CITY COMMENTS	
3	05/28/07	REVISED PER CITY COMMENTS	
4	11/7/07	AS-BUILT REVISIONS	JJF
5	4/29/11	AS-BUILT REVISIONS	JMK

DESIGNED BY BEF DATE 9/06

DRAWN BY RMW DATE 9/06

REVIEWED BY BEF DATE 9/06

PROJECT NO. 271-001 REF. ____

SCALE 1" = 20' ____

N/A

SHEET 8 OF 13

PROJECT CHINOOK TERRACE

NO. 271-001

TYPE AS-BUILTS

dburnett, Plotted: May 23, 2011 - 9:20am, I:\Land Projects 2004\271-001\const mgmt\AS-BUILTS 4-27-11\0611_08prof.dwg

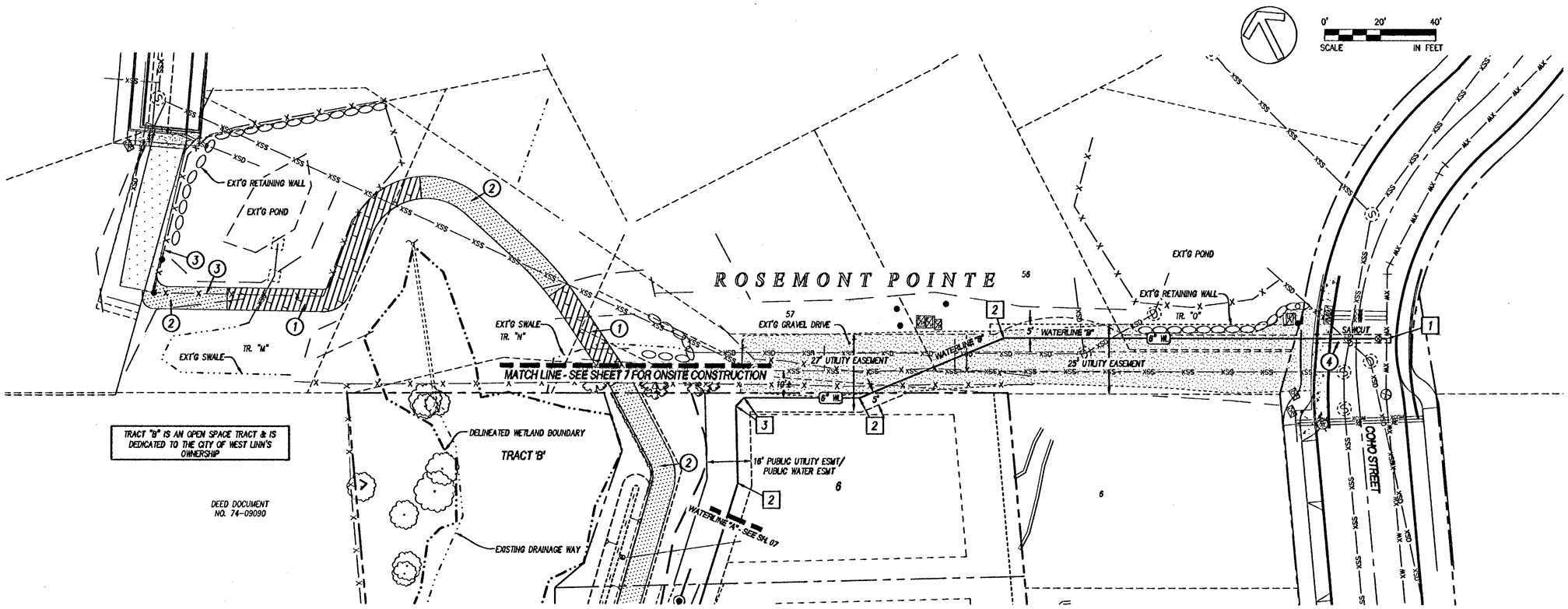

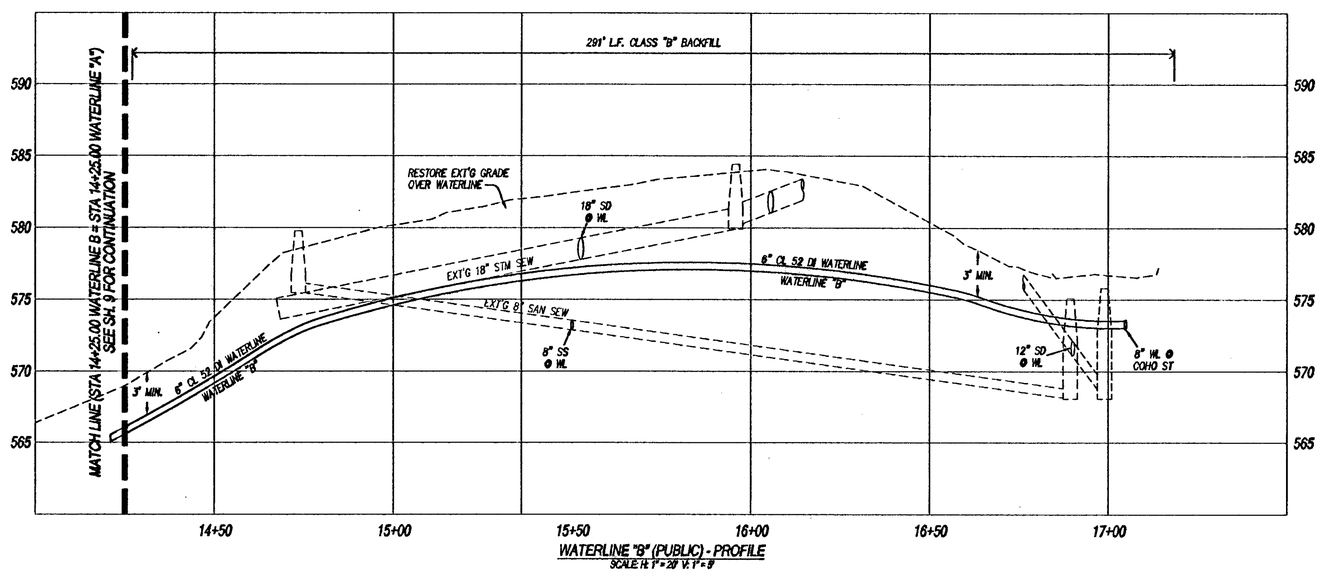

WATERLINE "B" (PUBLIC) - PROFILE
SCALE: H: 1"=20' V: 1"=8'

CONSTRUCTION NOTES

1. CONSTRUCT BOARDWALK OVER DRAINAGE WAYS, SEE DETAIL 4, SH. S4.1.
2. CONSTRUCT 8' WIDE AC PEDESTRIAN/BICYCLE PATH, 3" AC OVER 4" OF 3/4-0" CRUSHED ROCK, TAMP AND BEVEL EDGE OF AC.
3. CONTRACTOR TO COORDINATE FINAL PATH LOCATION AND WATER QUALITY FENCE LOCATION WITH CITY OF WEST LINN.
4. REMOVE AND REPLACE PAVEMENT TO THE NEAREST JOINT TO THE NORTH OR SOUTH AFTER INSTALLATION OF WATERLINE. PER DETAIL WL-203.

WATERLINE CONSTRUCTION NOTES

1. LIVE TAP EXT'G 8" WATERLINE INSTALL (1) 6" GATE VALVE, (1) 6"x8" REDUCER, CONTRACTOR TO VERIFY PIPE SIZE AND LOCATION. NOTIFY ENGINEER OF ANY DISCREPANCY PRIOR TO LIVE TAP.
2. INSTALL 22.50° BEND W/RESTRAINT JOINT.
3. INSTALL 45° BEND W/RESTRAINT JOINT.

VERTICAL BEND RESTRAINT TABLE

PIPE SIZE	BEND	UPPER RESTRAINT LENGTH	LOWER RESTRAINT LENGTH
6"	11.25°	4 L.F.	1 L.F.
6"	22.5°	8 L.F.	2 L.F.
6"	45°	18 L.F.	5 L.F.
–	–	–	–
–	–	–	–
–	–	–	–

PIPE MATERIAL – DUCTILE IRON
SOIL TYPE BACKFILL – WELL GRADED GRAVELS
FACTOR OF SAFETY – 1.5:1
TRENCH TYPE – COMPACTED GRANULAR MATERIAL 90% T-99
TEST PRESSURE – 150 PSI
DEPTH OF BURY ON UPPER RUN IS 3'
DEPTH OF BURY ON LOWER RUN IS 5'

HORIZONTAL BEND RESTRAINT TABLE

PIPE SIZE	BEND	RESTRAINT LENGTH
6"	11.25°	2 L.F.
6"	22.5°	4 L.F.
6"	45°	7 L.F.
6"	90°	18 L.F.
6"	REDUCER 8"x8"	18 L.F.
6"	DEAD END	37 L.F.

PIPE MATERIAL – DUCTILE IRON
SOIL TYPE BACKFILL – WELL GRADED GRAVELS
FACTOR OF SAFETY – 1.5:1
TRENCH TYPE – COMPACTED GRANULAR MATERIAL 90% T-99
TEST PRESSURE – 150 PSI
DEPTH OF BURY ON PIPE IS 3'

STREET AND UTILITY LEGEND

- EXISTING SIDEWALK
- PROPOSED SIDEWALK
- PROPOSED CURB
- SAWCUT LINE
- EXISTING PAVEMENT
- PROPOSED PAVEMENT
- SD — PROPOSED STORM LINE & MANHOLE
- SS — PROPOSED SANITARY LINE & MANHOLE
- WTR — PROPOSED WATERLINE & VALVE

AS-BUILT
DATE JMK 4-29-11

SFA Design Group, LLC
STRUCTURAL | CIVIL | LAND USE PLANNING
0420 SW Washington Square Dr., Suite 300
Portland, Oregon 97223
p: (503) 641-8311 f: (503) 640-7006
sfadesigngroup.com

OFFSITE WATER & PEDESTRIAN PATH PLAN & PROFILE
CHINOOK TERRACE SUBDIVISION
WEST LINN, OREGON

REGISTERED PROFESSIONAL ENGINEER — OREGON — BRENT E. FULTZ — VALID THROUGH 12-31-11

NO.	DATE	REVISION	BY
0	11/06/06	INITIAL SUBMITTAL	
1	03/19/07	REVISED PER CITY COMMENTS	
2	05/08/07	REVISED PER CITY COMMENTS	
3	05/28/07	REVISED PER CITY COMMENTS	
4	11/7/07	AS-BUILT REVISIONS	JDF
5	4/29/11	AS-BUILT REVISIONS	JMK

DESIGNED BY BEF DATE 9/06
DRAWN BY RMW DATE 9/06
REVIEWED BY BEF DATE 9/06
PROJECT NO. 271-001 REF.
SCALE 1"=20' N/A

SHEET 9 OF 13

PROJECT CHINOOK TERRACE
NO. 271-001
TYPE AS-BUILTS

dburnett, Plotted: May 23, 2011 - 9:20am, I:\Land Projects 2004\271-001\const mgmt\AS-BUILTS 4-27-11\10611_06watr.dwg

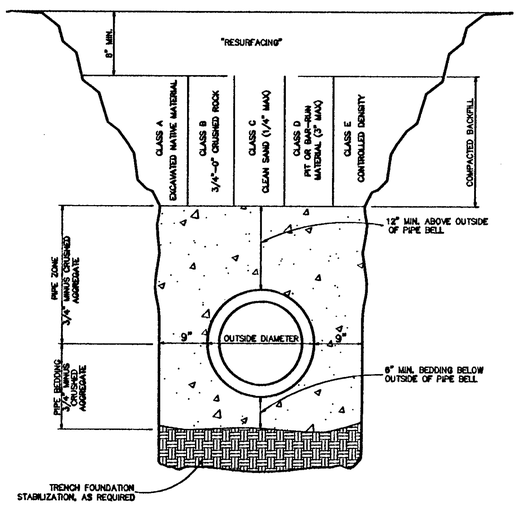

Trench Backfill, Bedding and Pipe Zone

West Linn	DATE: JAN 2000
	DRAWING NO. WL-200
	FILE NO. 00-200

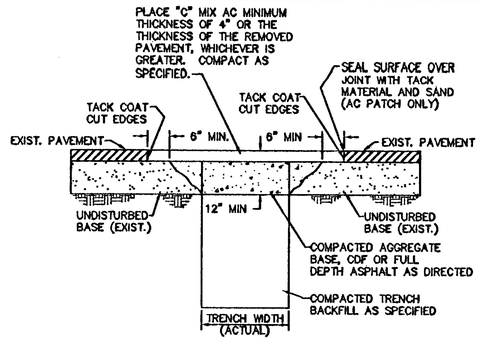

NOTES:
1. ALL EXISTING AC OR PCC PAVEMENT SHALL BE SAWCUT TO NEAT, STRAIGHT LINES PRIOR TO REPAVING.
2. CONCRETE PAVEMENT SHALL BE REPLACED WITH CONCRETE TO A MINIMUM THICKNESS OF REMOVED PAVEMENT, WHICHEVER IS GREATER.
3. IF EXISTING BASE MATERIAL IS CTB OR ATB, THEN REPLACEMENT BASE MATERIAL SHALL MATCH EXISTING.
4. ALL UTILITIES SHALL HAVE A MINIMUM COVER OF 36".
5. ALL TRENCH BACKFILL SHALL BE COMPACTED TO 95% OF MAXIMUM DENSITY PER AASHTO T-180 OR AS SPECIFIED IN THE CONTRACT DOCUMENTS.
6. ALL TRENCH BACKFILL AND PATCHING SHALL CONFORM TO THE STANDARDS AND SPECIFICATIONS OF THE CITY OF WEST LINN.
7. BACKFILL SHALL BE PLACED AND COMPACTED IN A MAXIMUM OF 6" LIFTS.

Street T-Cut

West Linn	DATE: JAN 2000
	DRAWING NO. WL-203
	FILE NO. 00-203

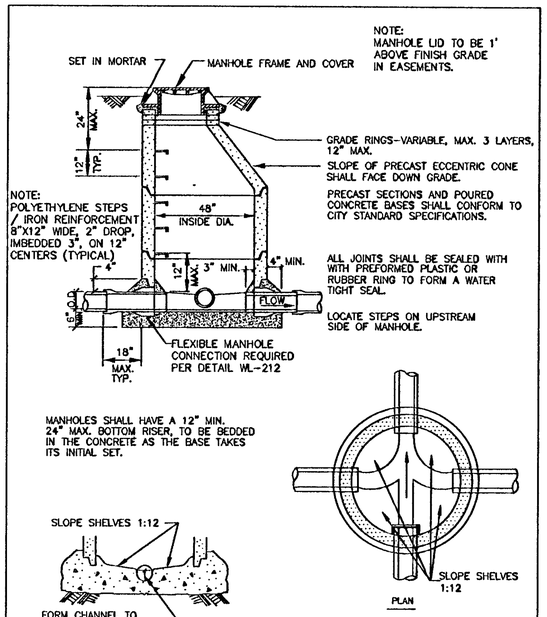

NOTE:
CHANNELS MUST BE ABLE TO PASS A 7"X30" CYLINDER INTO PIPES. SHELF SHALL NOT BE BELOW THE TOP OF THE PIPE.

Standard Manhole for Less than 36" Pipe

West Linn	DATE: JAN 2000
	DRAWING NO. WL-207
	FILE NO. 00-207

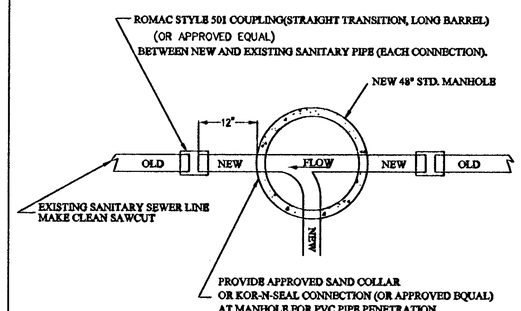

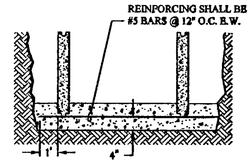

POURED IN PLACE MANHOLE REINFORCEMENT

Manhole Detail-Plan View New Manhole to Existing Sewer Line Connection

West Linn	DATE: JAN 2000
	DRAWING NO. WL-210
	FILE NO. 00-210

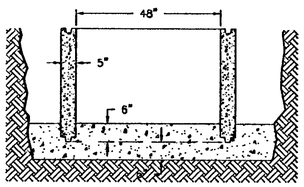

NOTE:
PIPE CONNECTIONS MUST HAVE FLEXIBLE CONNECTIONS

NOTE:
CONCRETE TO EXTEND 12" OUTSIDE OF MANHOLE WALL AND 6" ABOVE THE BOTTOM OF THE BASE SECTION

POURED IN PLACE MANHOLE BASE

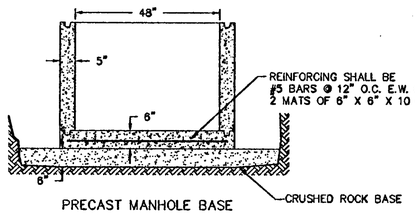

PRECAST MANHOLE BASE

NOTE:
USE 3300 PSI CONCRETE FOR EITHER MANHOLE BASE.

Manhole Base

West Linn	DATE: JAN 2000
	DRAWING NO. WL-211
	FILE NO. 00-211

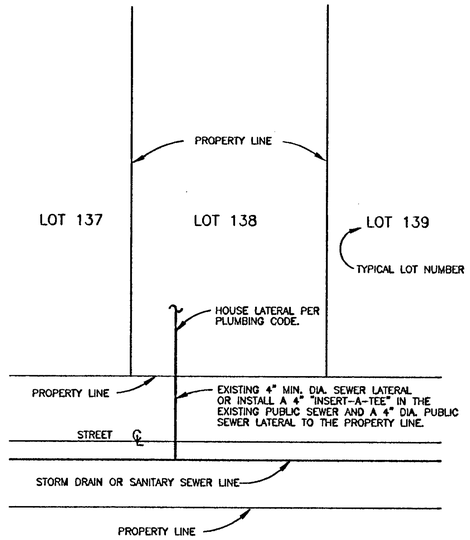

TYPICAL CONNECTION FOR SINGLE FAMILY RESIDENCE.

Sewer Connection Single Family

West Linn	DATE: JAN 2000
	DRAWING NO. WL-216
	FILE NO. 00-216

NOTES:
1. COVER AND FRAME TO BE MACHINED FOR TRUE BEARING.
2. MATERIAL SHALL BE GRAY CAST IRON A.S.T.M. A-48 CLASS 30.
3. TWO HOLE LID FOR SANITARY SEWER.
4. 18 HOLE LID FOR STORM SEWER.

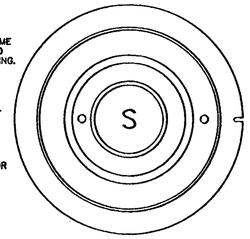

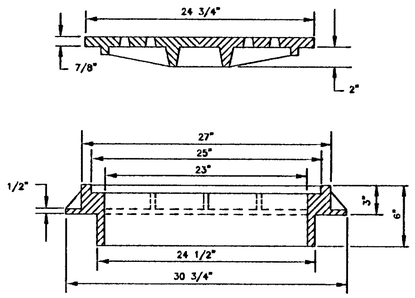

Suburban Manhole Frame and Cover 3" Depth

West Linn	DATE: JAN 2000
	DRAWING NO. WL-300
	FILE NO. 00-300

NOTES:
1. HYDRANTS TO BE MUELLER CENTURION MOL A-423 ONLY WITH 1 1/2" OPER. NUTS OR CLOW MEDDALION F-2545.
2. HYDRANT COLOR TO BE MILLER EQUIP. ENAMEL O E 40 (SAFETY YELLOW).
3. JOINTS TO BE RESTRAINED BY 3/4" DIA. GALVANIZED STEEL RODS AND THRUST BLOCKS OR MEGA LUGS AND THRUST BLOCKS.
4. ALL FITTINGS IN CONTACT W/CONCRETE SHALL BE WRAPPED IN PLASTIC. HYDRANT DRAIN HOLES TO REMAIN OPEN TO DRAIN ROCK AND OPERATIONAL.
5. MIN. 4 CU. FT. OF 1 1/2"-3/4" CLEAN DRAIN ROCK SHALL BE PLACED AROUND SHOE UP TO A MIN. OF 6" ABOVE DRAIN OUTLETS.
6. WHERE PLANTER STRIP EXISTS, HYDRANT SHALL BE PLACED SO FRONT PORT IS A MINIMUM OF 24" BEHIND FACE OF CURB.
7. WHERE INTEGRAL S/W & CURB EXISTS, HYD. SHALL BE PLACED AT BACK OF SIDEWALK, OR AS DIRECTED BY ENGINEER.
8. BURY OF HYDRANT SHALL BE MEASURED FROM FINISHED GRADE TO BOTTOM OF CONNECTING PIPE.
9. THRUST BLOCK AT FIRE HYDRANT TEE SHALL HAVE A 3.7 SQ. FT. BEARING AREA.
10. HYDRANT VALVE SHALL BE MUELLER RESILIENT WEDGE GATE VALVE #A-2360-18 ONLY.
11. WHERE NO SIDEWALK EXISTS, PLACE A 5'x 5'x 4" THICK A.C. OR CONC. APRON AROUND HYDRANT.
12. NO EXTENTIONS ALLOWED.

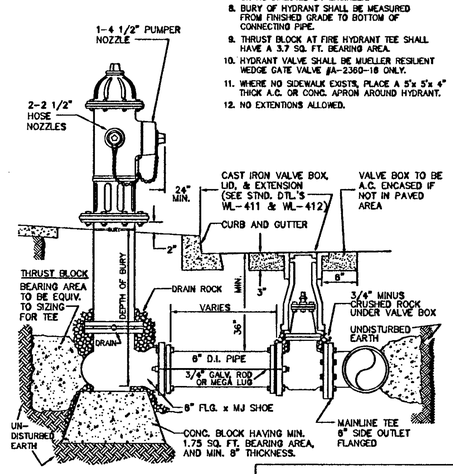

AS-BUILT
DATE JMK 4-29-11

Standard Fire Hydrant Assembly

West Linn	DATE: JAN 2000
	DRAWING NO. WL-401
	FILE NO. 00-401

SFA Design Group, LLC
STRUCTURAL | CIVIL | LAND USE PLANNING
9600 SW Washington Square Dr. Suite 350
Portland, Oregon 97223
p: (503) 641-8211 f: (503) 641-7086
sfadesigngroup.com

CONSTRUCTION DETAILS
CHINOOK TERRACE SUBDIVISION
WEST LINN, OREGON

THE DETAILS ON THIS SHEET WERE PREPARED BY PUBLIC AGENCIES AND EQUIPMENT MANUFACTURERS. THE RESPONSIBILITY OF THE PROJECT ENGINEER IS LIMITED TO THE SELECTION OF THESE DETAILS AS APPROPRIATE TO THE PROJECT.

NO.	DATE	REVISION	BY
0	11/06/06	INITIAL SUBMITTAL	
1	03/19/07	REVISED PER CITY COMMENTS	
2	05/09/07	REVISED PER CITY COMMENTS	
3	05/28/07	REVISED PER CITY COMMENTS	
4	11/7/07	AS-BUILT REVISIONS	JDF
5	4/29/11	AS-BUILT REVISIONS	JMK

DESIGNED BY BEF DATE 9/06
DRAWN BY RMW DATE 9/06
REVIEWED BY BEF DATE 9/06
PROJECT NO. 271-001 REF. ____
SCALE: N/A N/A

SHEET 10 OF 13

PROJECT CHINOOK TERRACE
NO. 271-001
TYPE AS-BUILTS

dbarnett, Plotted: May 23, 2011 - 9:22am, G:\Land Projects 2004\271-001\const mgmt\AS-BUILTS 4-27-11\10det1.dwg

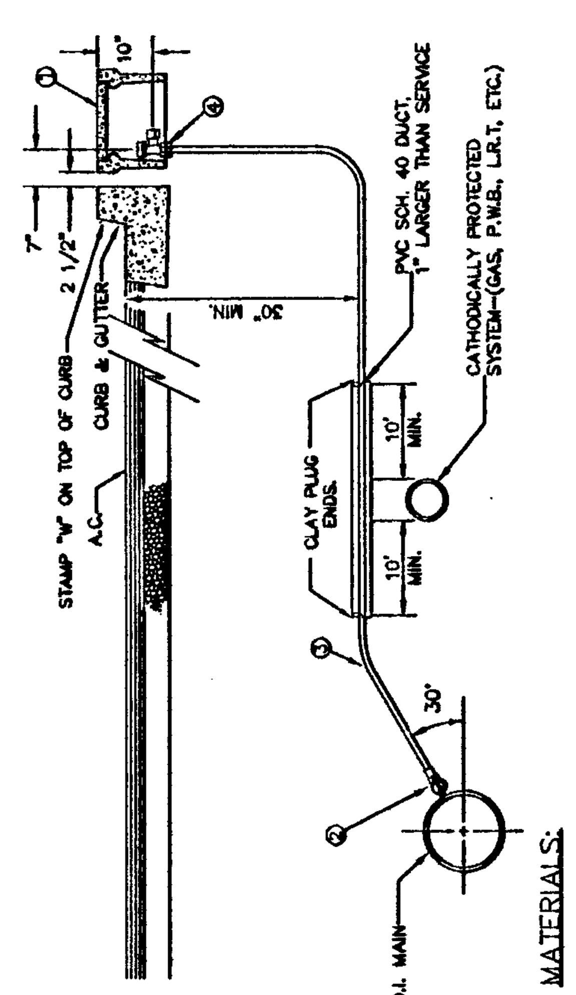

MATERIALS:
1. BROOKS METER BOX, BODY NO. 37, LID AND COVER NO. 37-S.
2. MUELLER CORP. STOP NO. H-15008 OR FORD F1000-40 SET CORP. STOP WITH OPERATING NUT AT 3 OR 9 O'CLOCK.
3. 1" SOFT TEMPER, TYPE 'K' COPPER TUBING COMPLYING WITH ASTM B-88.
4. MUELLER ANGLE METER STOP NO. H-14258 (FORD NO. KV43-444W-Q).

NOTES:
1. SUBSTITUTES FOR ANY MATERIALS SHOWN SHALL BE APPROVED BY THE CITY ENGINEER.
2. ALL PIPE AND STRUCTURE ZONES SHALL BE BACKFILLED USING 3/4" MINUS CRUSHED AGG. AND COMPACTED TO 95% MAX DENSITY AS DETERMINED BY AASHTO T-180.
3. WHEN AN ACTIVE CATHODIC PROTECTED SYSTEM IS ENCOUNTERED, SCH. 40 PVC SHALL BE INSTALLED AS SHOWN ABOVE WITH CLAY PLUG.
4. METER BOX SHALL BE CENTERED OVER THE COMPLETED METER ASSEMBLY.
5. FOR VACANT RESIDENTIAL LOTS, LOCATE SINGLE SERVICE 18" INSIDE SIDE LOT LINE.
6. TAPS INTO MAIN TO BE AT 18" CENTERLINE MIN.
7. ANGLE METER STOPS TO BE 18" FROM PROPERTY LINE AND NOT IN DRIVEWAY APPROACH.

Standard 1" Water Service

West Linn | DATE JAN 2000 | DRAWING NO. WL-402 | FILE NO. 00-402

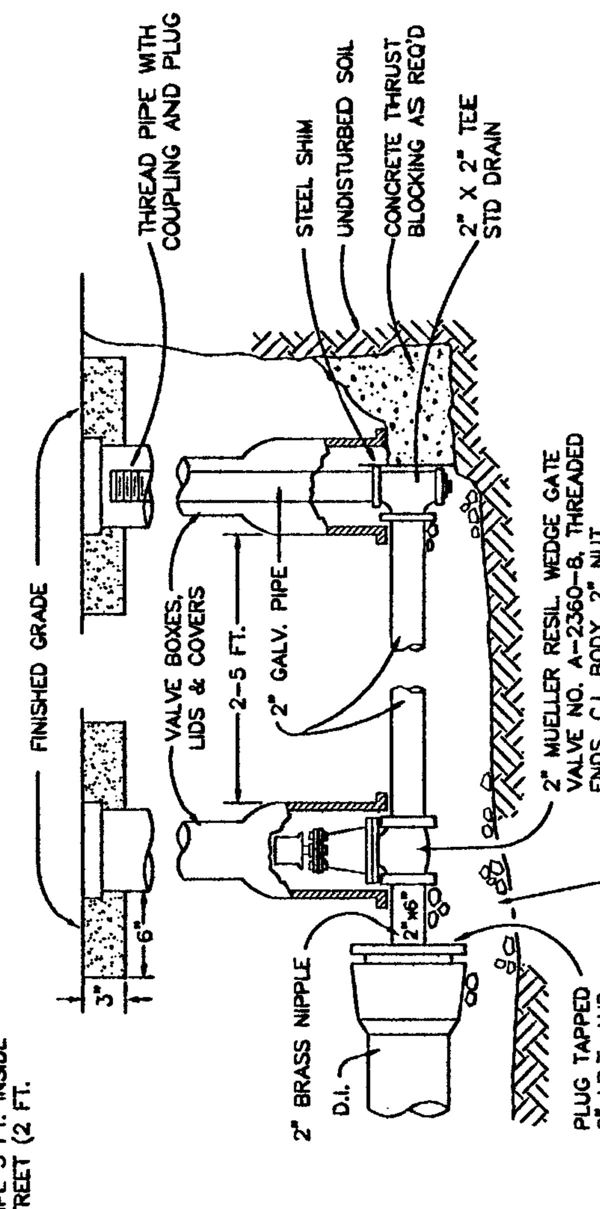

NOTES:
1. VALVE BOX SHALL BE PER STANDARD DETAIL WL-411.
2. VALVE BOX TO BE ASPHALT ENCASED AS SHOWN, IF NOT IN PAVED AREA.
3. BLOW-OFF UNIT SHALL BE BACKFILLED WITH 3/4"-0" CRUSHED ROCK AND COMPACTED TO 95% OF MAX. DENSITY DETERMINED BY AASHTO T-180.
4. PLACE BLOW-OFF STANDPIPE 3 FT. INSIDE R.O.W. LINE AT END OF STREET (2 FT. FROM BARRICADE).

Standard 2" Blow-off Assembly

West Linn | DATE JAN 2000 | DRAWING NO. WL-404A | FILE NO. 00-404A

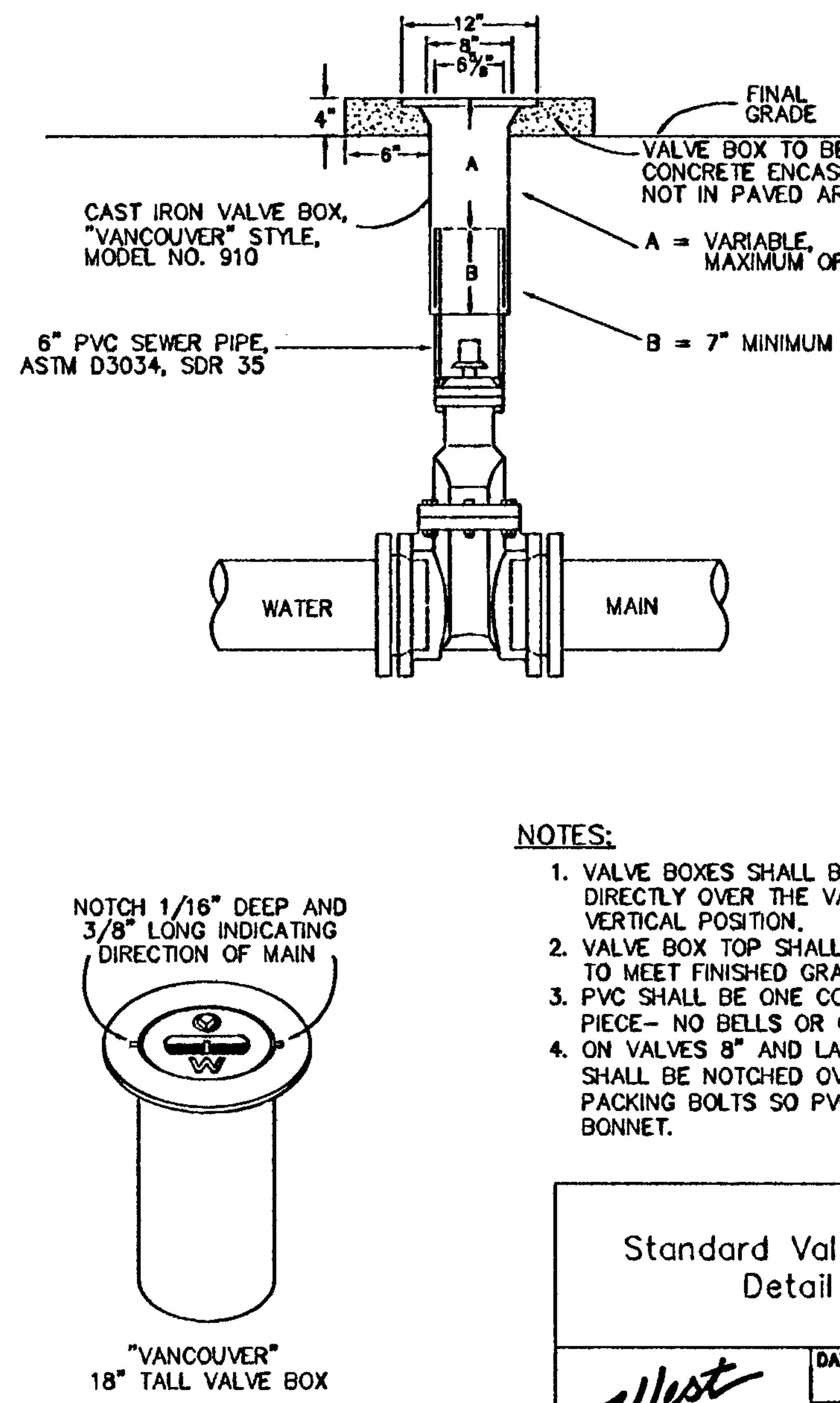

NOTES:
1. VALVE BOXES SHALL BE CENTERED DIRECTLY OVER THE VALVE NUT IN A VERTICAL POSITION.
2. VALVE BOX TOP SHALL BE ADJUSTED TO MEET FINISHED GRADE.
3. PVC SHALL BE ONE CONTINUOUS PIECE- NO BELLS OR COUPLERS.
4. ON VALVES 8" AND LARGER, PVC SHALL BE NOTCHED OVER VALVE PACKING BOLTS SO PVC SITS ON BONNET.

Standard Valve Box Detail

West Linn | DATE JAN 2000 | DRAWING NO. WL-411 | FILE NO. 00-411

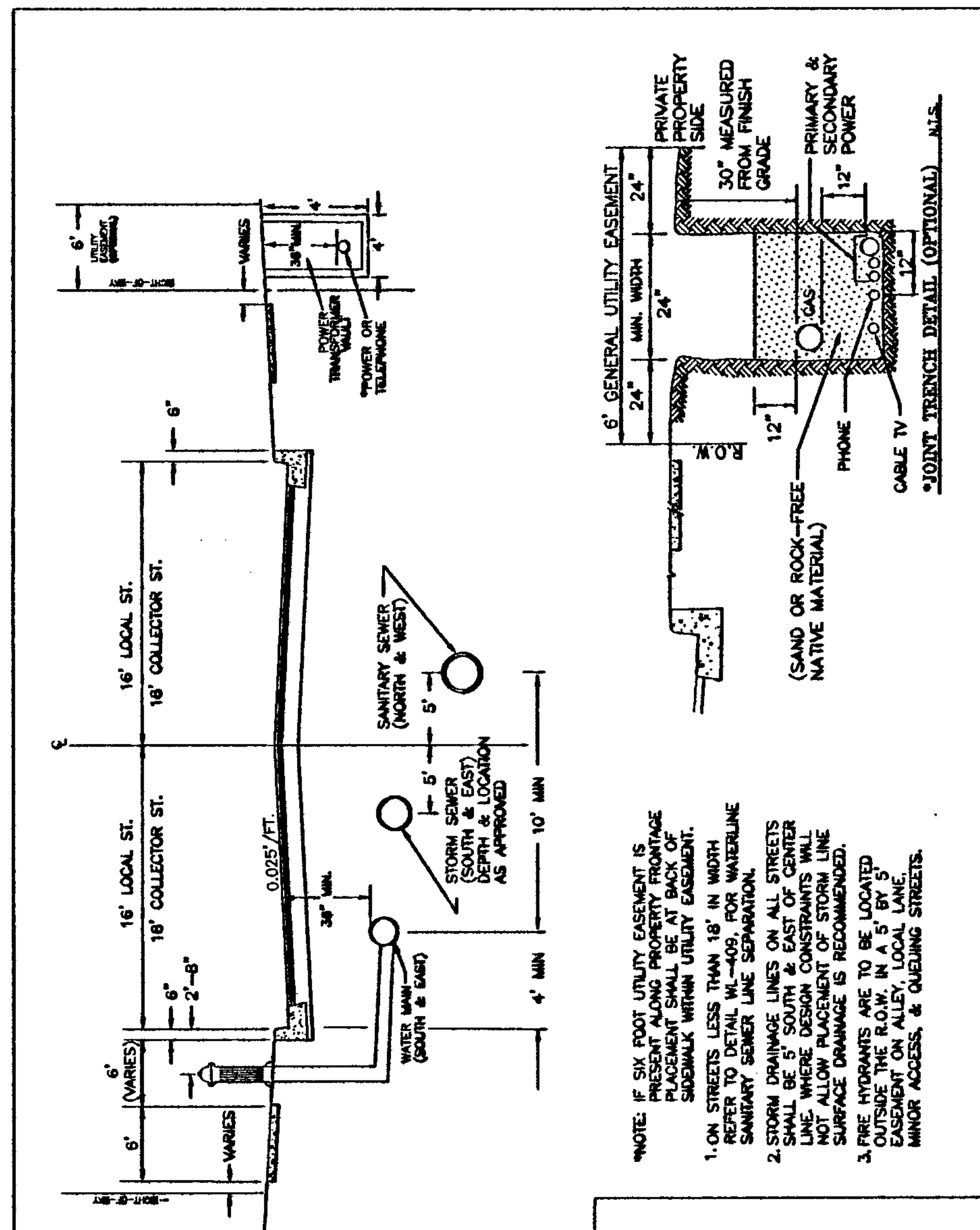

AS-BUILT
DATE JMK 4-29-11

Typical Utility Placement Detail

West Linn | DATE JAN 2000 | DRAWING NO. WL-500 | FILE NO. 00-500

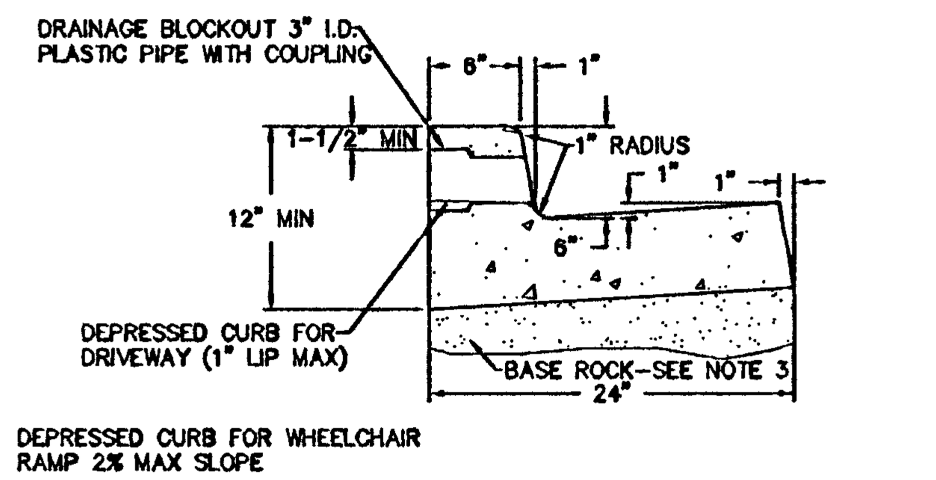

TYPICAL CURB & GUTTER

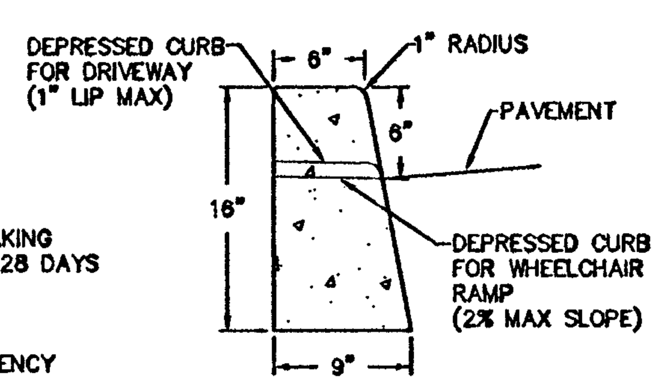

TYPICAL STRAIGHT CURB

NOTES:
1. CONCRETE SHALL HAVE A BREAKING STRENGTH OF 3300 PSI AFTER 28 DAYS
2. CONTRACTION JOINTS
   A) TO BE PROVIDED
      -AT EACH POINT OF TANGENCY
      -AT EACH COLD JOINT
      -AT EACH SIDE OF INLET STRUCTURES
      -AT BOTH SIDES OF AN APPROACH
   B) SPACING TO BE NOT MORE THAN 15 FEET
   C) THE DEPTH OF THE JOINT SHALL BE AT LEAST 1/3 OF THE THICKNESS OF CONCRETE
   D) EXPANSION JOINTS SHALL NOT BE USED
3. BASE ROCK - 1-1/2"-0", 95% COMPACTION ROCK SHALL BE TO SUBGRADE OF THE STREET SECTION OR 4" IN DEPTH, WHICHEVER IS GREATER
4. DRAINAGE BLOCK - 3" DIA. PLASTIC PIPE
   A) DRAINAGE ACCESS THROUGH EXISTING CURBS SHALL BE DONE BY:
      -CORE DRILLING
      -VERTICAL SAWCUT OF CURB 18" EACH SIDE OF DRAIN AND RE-POURED TO FULL DEPTH OF CURB
5. STAMP TOP OF CURB WITH "W" AT WATER SERVICE CROSSING AND "S" AT SANITARY LATERAL CROSSING

Typical Curbs

West Linn | DATE JAN 2000 | DRAWING NO. WL-501 | FILE NO. 00-501

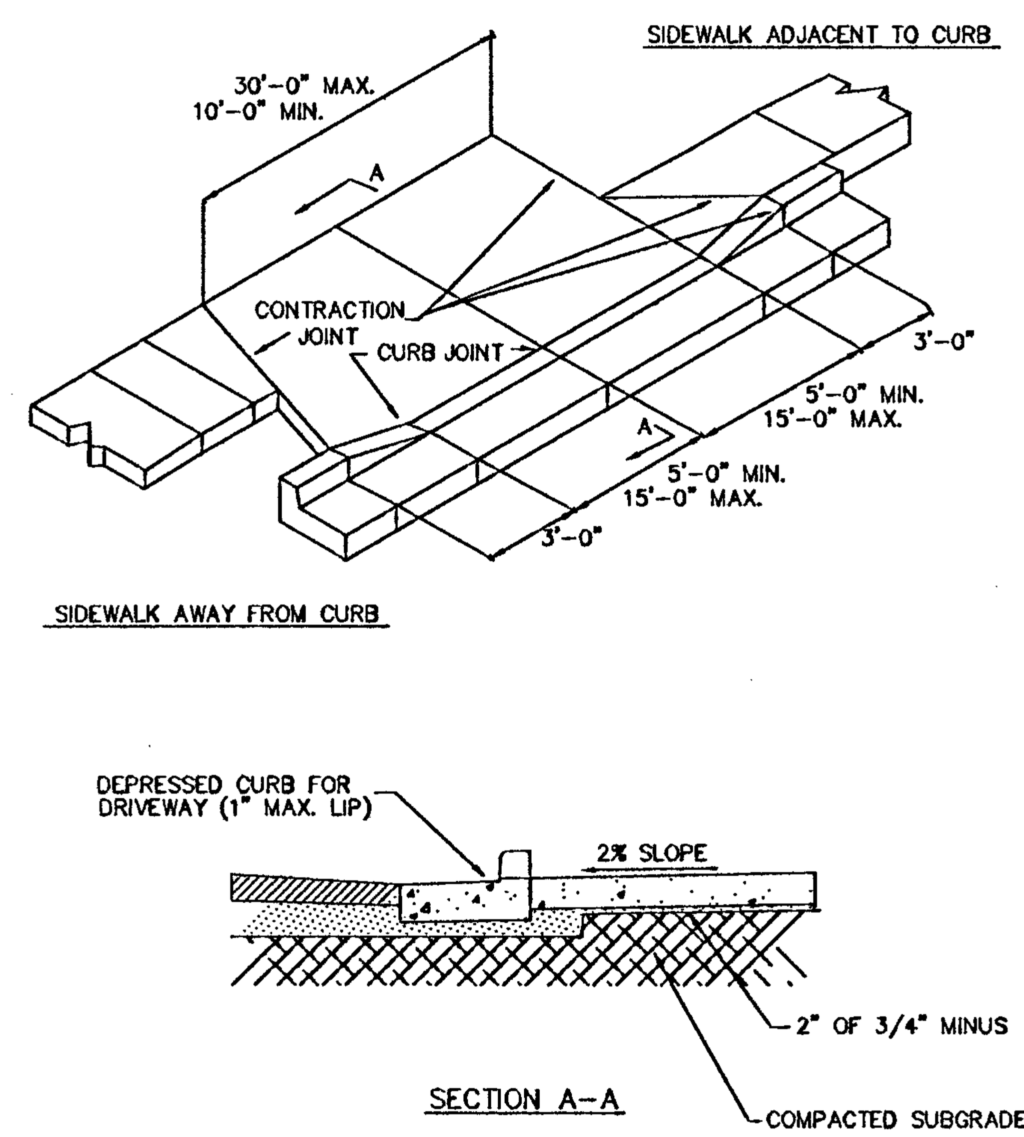

SECTION A-A

NOTES
1. CONCRETE SHALL HAVE A MINIMUM BREAKING STRENGTH OF 3300 PSI AFTER 28 DAYS, 6 SACK MIX.
2. CURB SHALL BE TROWELED JOINT WITH A MIN. 1/2" RADIUS ALONG BACK OF CURB.
3. DRIVEWAY SHALL BE A MINIMUM 6" THICK.

Residential Driveway

West Linn | DATE JAN 2000 | DRAWING NO. WL-503 | FILE NO. 00-503

PLAN

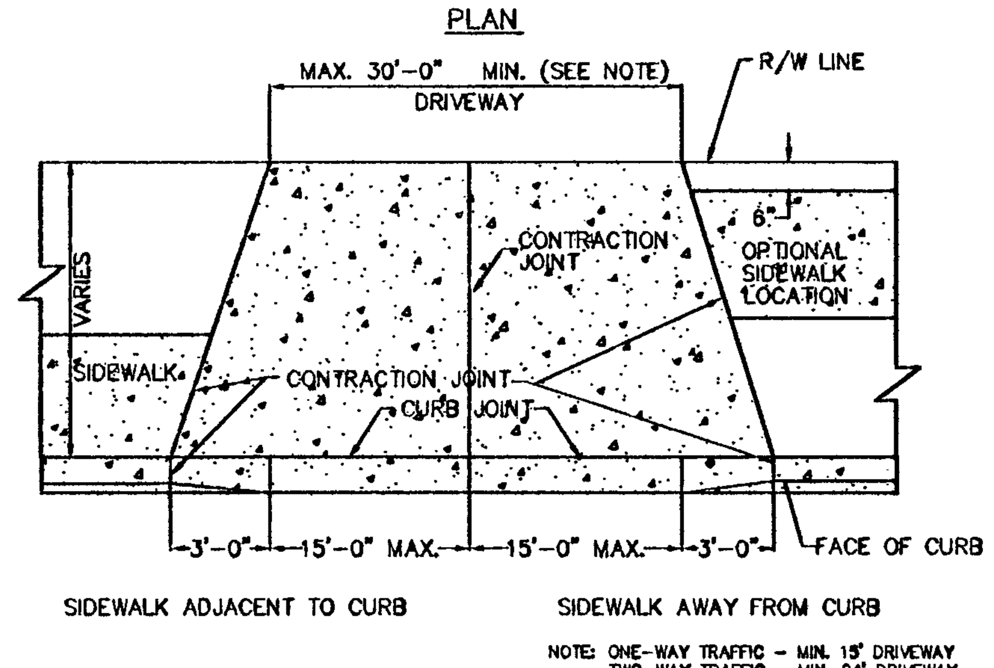

ELEVATION

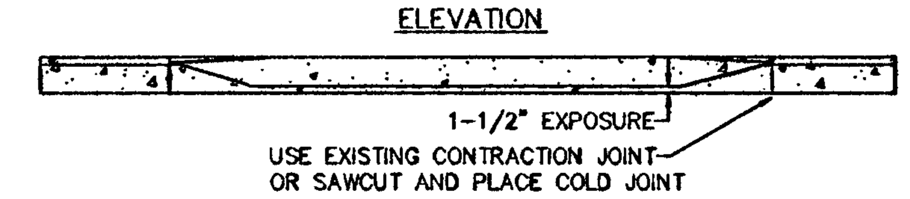

SECTION A-A

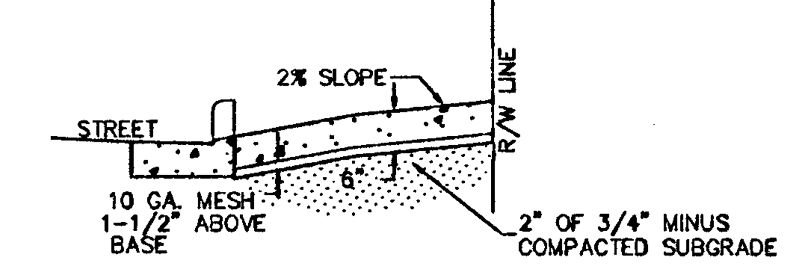

NOTES
1. CONCRETE SHALL HAVE A MINIMUM BREAKING STRENGTH OF 3300 PSI AFTER 28 DAYS, 6 SACK MIX.
2. CURB JOINT SHALL BE A TROWELED JOINT WITH A MIN. 1/2" RADIUS ALONG BACK OF CURB.
3. DRIVEWAY SHALL BE A MINIMUM 6" THICK.

Commercial Driveway

West Linn | DATE JAN 2000 | DRAWING NO. WL-504 | FILE NO. 00-504

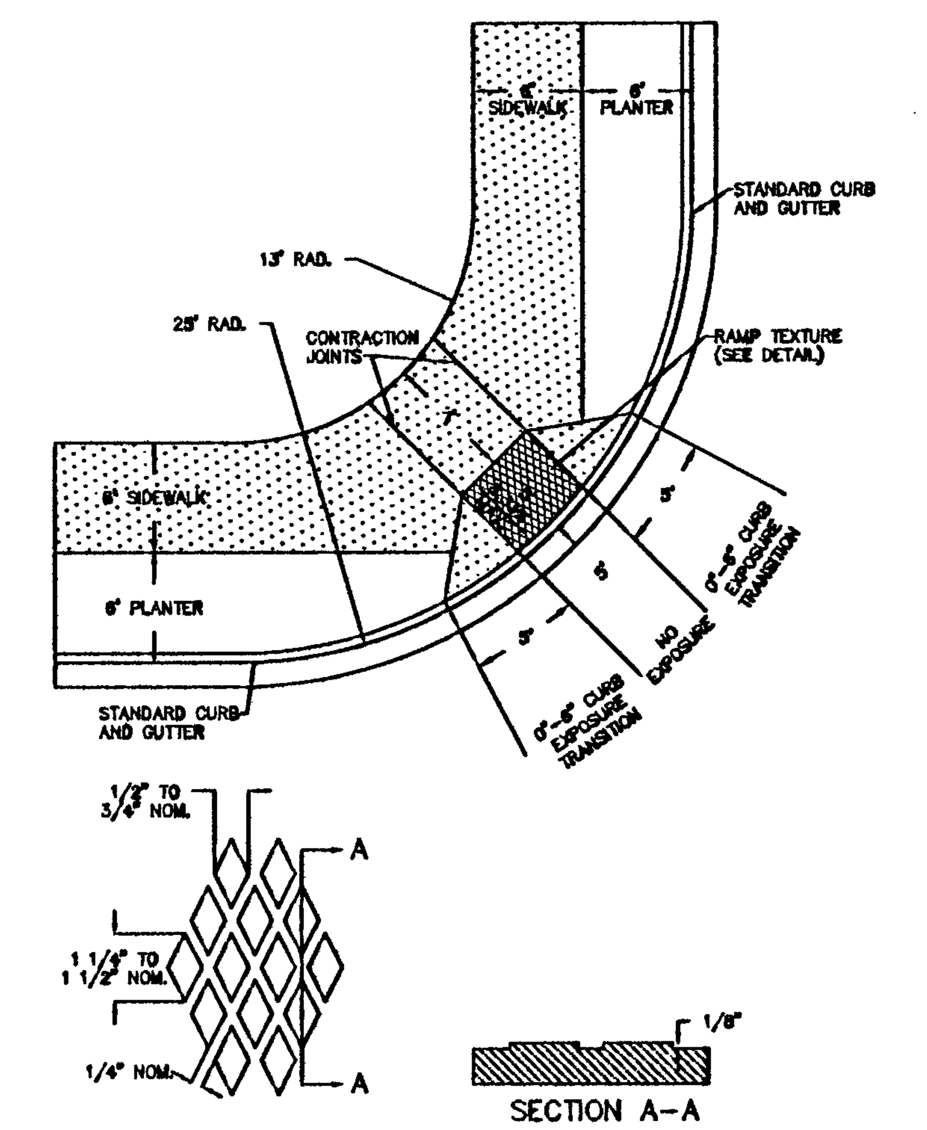

RAMP TEXTURE DETAIL

NOTES:
1. THE "AMERICANS WITH DISABILITIES ACT" (ADA) REQUIRES THAT ACCESS RAMPS TO SIDEWALKS CONFORM TO ALL FEDERAL GUIDELINES. EXCEPTIONS TO THE REQUIREMENTS IN THIS DRAWING MUST BE APPROVED BY THE CITY ENGINEER.
2. NO ABOVE GROUND UTILITIES ARE PERMITTED WITHIN RAMP AREA.
3. RAMP SURFACE SHALL BE TEXTURED WITH RAISED DIAMOND TEXTURE. TEXTURING SHALL BE DONE WITH AN EXPANDED METAL GRATE STAMPED INTO THE CONCRETE.
4. CONCRETE STRENGTH SHALL BE 3300 PSI.
5. PLACE CONTRACTION JOINTS AS SHOWN ABOVE.
6. WHEN EITHER OPPOSING CURB RAMP HAS AN EXISTING TWIN RAMP, USE DETAIL WL-507B.

Single Curb Ramp (For Use At Intersection of (2) Local Streets Only)

West Linn | DATE JAN 2000 | DRAWING NO. WL-507A | FILE NO. 00-507A

SFA Design Group, LLC
STRUCTURAL | CIVIL | LAND USE PLANNING
9020 SW Washington Square Dr. Suite 350
Portland, Oregon 97223
p: (503) 641-8311 f: (503) 643-7905
sfadesigngroup.com

CONSTRUCTION DETAILS
CHINOOK TERRACE SUBDIVISION
WEST LINN, OREGON

THE DETAILS ON THIS SHEET WERE PREPARED BY PUBLIC AGENCIES AND EQUIPMENT SUPPLIERS. THE RESPONSIBILITY OF THE PROJECT ENGINEER IS LIMITED TO THE SELECTION OF THESE DETAILS AS APPROPRIATE TO THE PROJECT.

NO.	DATE	REVISION	BY
0	11/06/06	INITIAL SUBMITTAL	
1	03/19/07	REVISED PER CITY COMMENTS	
2	05/09/07	REVISED PER CITY COMMENTS	
3	05/28/07	REVISED PER CITY COMMENTS	
4	11/7/07	AS-BUILT REVISIONS	JDF
5	4/29/11	AS-BUILT REVISIONS	JMK

DESIGNED BY BEF DATE 9/06
DRAWN BY RAW DATE 9/06
REVIEWED BY BEF DATE 9/06
PROJECT NO. 271-001 REF. ___
SCALE N/A

SHEET 11 OF 13

PROJECT CHINOOK TERRACE
NO. 271-001
TYPE AS-BUILTS

dsumell, Plotted: May 23, 2011 - 9:21am, S:\Land Projects 2004\271-001\const mgmt\AS-BUILTS 4-27-11\10611_11det2.dwg

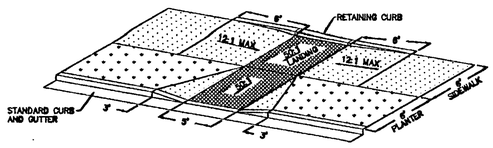

PARALLEL CURB RAMP

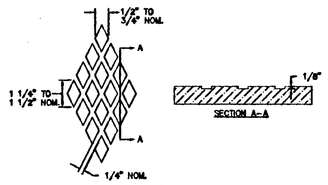

RAMP TEXTURE DETAIL

NOTES:
1. THE AMERICANS WITH DISABILITIES ACT" (ADA) REQUIRES THAT ACCESS RAMPS TO SIDEWALKS CONFORM TO ALL FEDERAL GUIDELINES. EXCEPTIONS TO THE REQUIREMENTS IN THIS DRAWING MUST BE APPROVED BY THE CITY ENGINEER AND MUST COMPLY WITH ADA.
2. NO ABOVE GROUND UTILITIES ARE PERMITTED WITHIN RAMP AREA.
3. LANDINGS SHALL BE PLACED AT THE TOP OF EACH RAMP. LANDING SLOPES SHALL NOT EXCEED 50:1 IN ANY DIRECTION. THE SLOPE OF THE SURFACING AT THE BOTTOM OF THE RAMP SHALL NOT EXCEED 20:1 FOR A DISTANCE OF 2' (SEE TYPICAL SECTION ABOVE).
4. MINIMUM LANDING DIMENSIONS SHALL BE 4' X 4'.
5. RAMP SURFACE SHALL BE TEXTURED WITH RAISED DIAMOND TEXTURE. TEXTURING SHALL BE DONE WITH AN EXPANDED METAL GRATE STAMPED INTO THE CONCRETE.
6. CONCRETE STRENGTH SHALL BE 3300 PSI.

Parallel Curb Ramp	
West Linn	DATE: JAN 2000
	DRAWING NO. WL-506
	FILE NO. 00-506

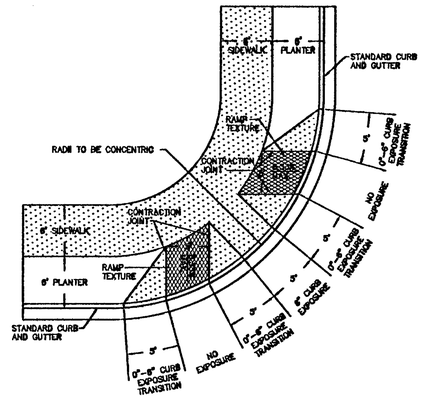

RAMP TEXTURE DETAIL

NOTES:
1. THE "AMERICANS WITH DISABILITIES ACT" (ADA) REQUIRES THAT ACCESS RAMPS TO SIDEWALKS CONFORM TO ALL FEDERAL GUIDELINES. EXCEPTIONS TO THE REQUIREMENTS IN THIS DRAWING MUST BE APPROVED BY THE CITY ENGINEER.
2. NO ABOVE GROUND UTILITIES ADRE PERMITTED WITHIN RAMP AREA.
3. RAMP SURFACE SHALL BE TEXTURED WITH RAISED DIAMOND TEXTURE. TEXTURING SHALL BE DONE WITH AN EXPANDED METAL GRATE STAMPED INTO THE CONCRETE.
4. CONCRETE STRENGTH SHALL BE 3300 PSI.
5. PLACE CONTRACTION JOINTS AS SHOWN ABOVE.
6. FOR INTERSECTING LOCAL STREETS USE DETAIL WL-507A.

Twin Curb Ramp	
West Linn	DATE: JAN 2000
	DRAWING NO. WL-507B
	FILE NO. 00-507B

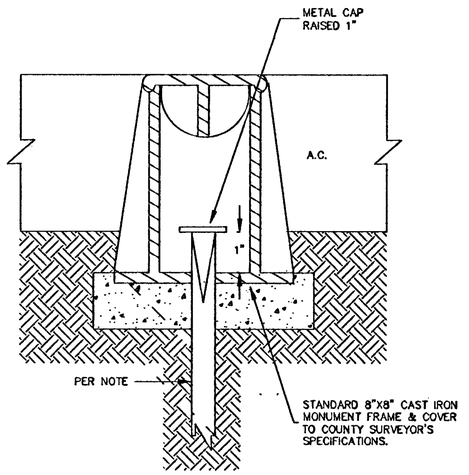

NOTES: ALL MONUMENTS SHALL USE EITHER 5/8" DIA.X 30" LONG IRON ROD OR 3/4" DIA.X 30" LONG IRON PIPE.

ALL MONUMENTS SHALL BE IN ACCORDANCE WITH ORS 209.250(4).

CONCRETE SHALL BE CLASS 3300.

FRAME AND COVER SHALL BE CAST IRON OR ALUMINUM.

COVER SHALL HAVE "MONUMENT" CAST INTO TOP.

Centerline Survey Monuments	
West Linn	DATE: JAN 2000
	DRAWING NO. WL-513
	FILE NO. 00-513

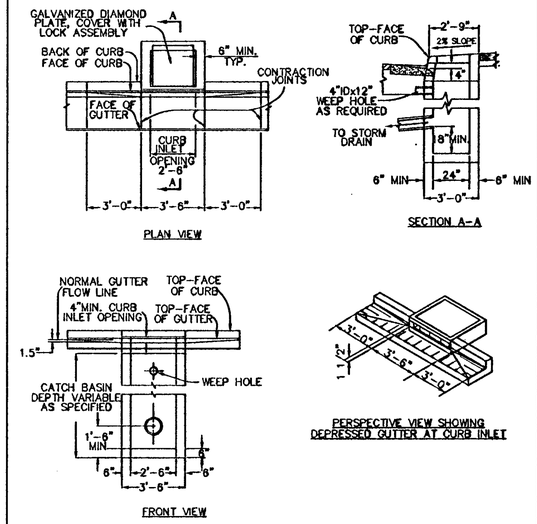

NOTES:
1. ALL FABRICATED METAL PARTS SHALL BE HOT-DIPPED GALVANIZED AFTER FABRICATION.
2. CONCRETE SHALL BE CLASS 3000.
3. CURB INLET BASE MAY BE PRECAST OR CAST-IN-PLACE.
4. FOR SLOPES OF 5% OR GREATER, USE DWG. WL-601.

Gutter Inlet 2 1/2 A	
West Linn	DATE: JAN 2000
	DRAWING NO. WL-600
	FILE NO. 00-600

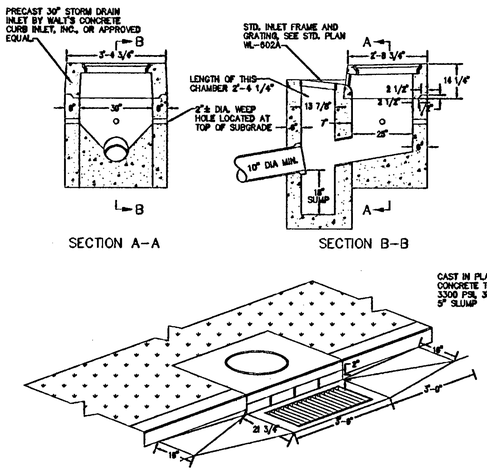

Combination Curb Inlet	
West Linn	DATE: JAN 2000
	DRAWING NO. WL-601
	FILE NO. 00-601

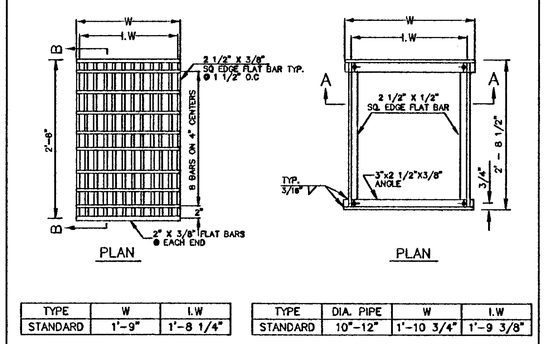

TYPE	W	I.W
STANDARD	1'-9"	1'-8 1/4"

TYPE	DIA. PIPE	W	I.W
STANDARD	10"-12"	1'-10 3/4"	1'-9 3/8"

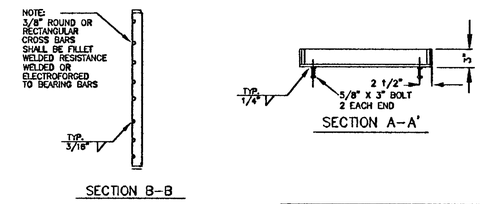

NOTE:
USE VERTICAL BEADS IN CORNERS. FILLET WELD JOINT ON BOTOM OF FRAME. GRATE MUST REST FLAT ON FRAME SURFACE.

Frame & Grate for Gutter & Curb Inlets	
West Linn	DATE: JAN 2000
	DRAWING NO. WL-602A
	FILE NO. 00-602A

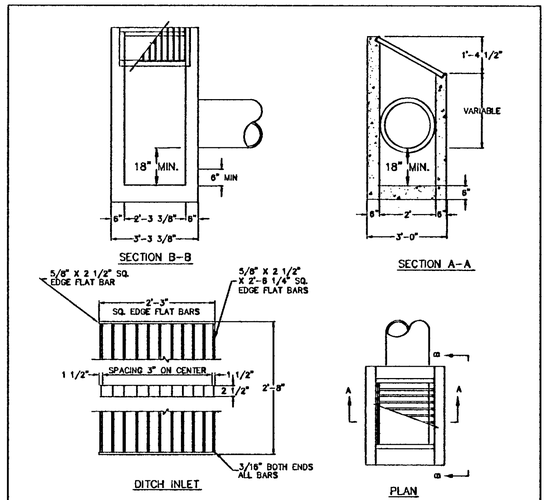

NOTES:
1. CONCRETE STRENGTH SHALL BE 3300 PSI.
2. CATCH BASIN, FRAME, AND GRATES SHALL MEET H20 LOADING.
3. INSIDE FRAME DIMENSIONS: 2'-3 3/8", 2'-8 1/2".

NOTE:
3/8" CROSS BARS SHALL BE FLUSH WITH THE GRATE SURFACE AND MAY BE FILLET WELDED, RESISTANCE WELDED OR ELECTROFORGED TO BEARING BARS.

DITCH INLET FRAME

INLET TYPE	V	Y	Y1	NO. OF BARS	TYPE
D	2'-4 3/4"	2'-3 3/8"	2'-3"	9	1

Standard Ditch Inlet	
West Linn	DATE: JAN 2000
	DRAWING NO. WL-603
	FILE NO. 00-603

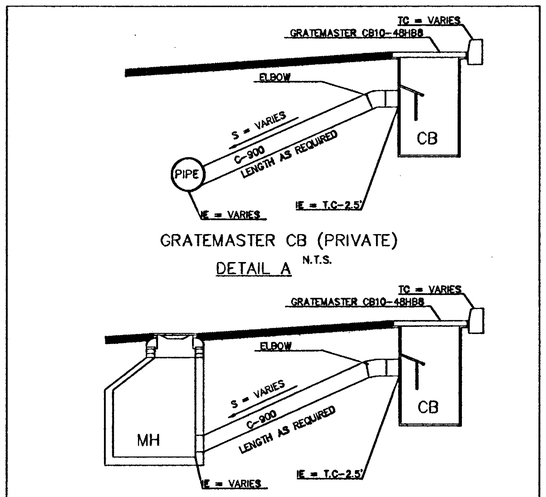

AS MANUFACTURED BY:
GRATEMASTER, INC.
HILLSBORO, OR 97123
(503) 647-2050
FAx: 647-2425

LYNCH CATCH BASIN	N.T.S.

AS-BUILT
DATE JMK 4-29-11

SFA Design Group, LLC
STRUCTURAL | CIVIL | LAND USE PLANNING
9600 SW Washington Square Dr., Suite 260
Portland, Oregon 97223
p: (503) 641-8311 f: (503) 643-7005
sfadesigngroup.com

CONSTRUCTION DETAILS
CHINOOK TERRACE SUBDIVISION
WEST LINN, OREGON

THE DETAILS ON THIS SHEET WERE PREPARED BY PUBLIC AGENCIES AND EQUIPMENT SUPPLIERS. THE RESPONSIBILITY OF THE PROJECT ENGINEER IS LIMITED TO THE SELECTION OF THESE DETAILS AS APPROPRIATE TO THE PROJECT.

NO.	DATE	REVISION	BY
0	11/06/06	INITIAL SUBMITTAL	
1	03/19/07	REVISED PER CITY COMMENTS	
2	05/09/07	REVISED PER CITY COMMENTS	
3	05/29/07	REVISED PER CITY COMMENTS	
4	11/7/07	AS-BUILT REVISIONS	JDF
5	4/29/11	AS-BUILT REVISIONS	JMK

DESIGNED BY BEF DATE 9/06
DRAWN BY RMW DATE 9/06
REVIEWED BY BEF DATE 9/06
PROJECT NO. 271-001 REF: ____
SCALE N/A N/A

SHEET 12 OF 13

PROJECT CHINOOK TERRACE
NO. 271-001
TYPE AS-BUILTS

dburnett, Plotted: May 23, 2011 - 9:23am, B:\Land Projects 2004\271-001\const mgmt\AS-BUILTS 4-27-11\10611_12det3.dwg

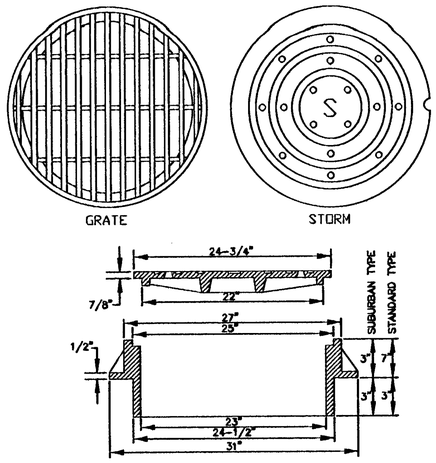

NOTES:
1. USE SUBURBAN TYPE ONLY IN NON-TRAFFIC AREAS, AND ONLY WITH APPROVAL BY THE CITY.
2. COVER AND FRAME SHALL BE GRAY CAST IRON ASTM A-48 CLASS 30.
3. COVER AND FRAME TO BE MACHINED TO A TRUE BEARING ALL AROUND.
4. NOTCH LID FOR LIFTING HOOK.
5. OPEN GRATES REQUIRE APPROVAL BY CITY, AND MUST BE BICYCLE SAFE IF USED IN TRAFFIC AREAS.

SUBURBAN AND STANDARD MANHOLE FRAME AND COVER

Manhole Covers	
West Linn	DATE: JAN 2000
	DRAWING NO. WL-605
	FILE NO. 00-605

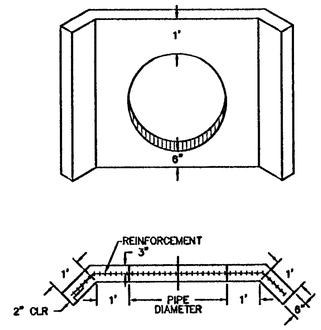

NOTES:
1. USE CONCRETE HAVING A 28 DAY DESIGN STRENGTH OF 3300 PSI.
2. OUTLET WING WALL SHALL BE USED FOR ALL OUTFALL PIPES FROM 10" TO 36".
3. THIS DETAIL REPRESENTS THE MINIMUM REQUIREMENT. THE NEED FOR ADDITIONAL STEEL, A FOOTING AND DRAINAGE BEHIND THE WALL SHALL BE INVESTIGATED BY THE DESIGN ENGINEER.
4. FOR PIPES LARGER THAN 33" OR MULTIPLE PIPE OUTLETS, USE DETAIL WL-612.
5. CONCRETE REINFORCEMENT SHALL CONSIST OF:
   A) ADDING A POLY-FIBER MESH TO THE CONCRETE MIX OR
   B) USE (2) #4 BARS ABOVE AND BELOW PIPE AND #4 BARS AT 6" O.C. VERTICALLY.

Outlet Headwall (For Outlet Pipes of 10" to 33")	
West Linn	DATE: JAN 2000
	DRAWING NO. WL-613
	FILE NO. 00-613

D = PIPE DIAMETER
W = BOTTOM WIDTH OF CHANNEL
P = WETTED PERIMETER OF CHANNEL

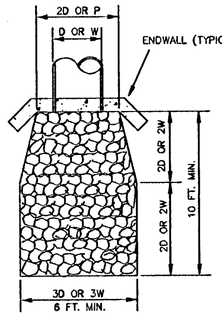

DESIGN VELOCITY FT./SEC	ROCK CLASSIFICATION BY WEIGHT
6 - 10	200 LBS.
10 - 12	1/4 TON
12 - 14	1/2 TON
14 - 16	1 TON
16 - 18	2 TON

SELECTION OF RIP RAP (SEE NOTE 1)

NOTES:
1. DIMENSIONS FOR RIP RAP APPLY TO FLOWS < 2 CFS RIP RAP FOR FLOWS > 2 CFS MUST BE DESIGNED BY AN ENGINEER FLOWS > 20 FPS SHALL USE ENERGY DISSIPATOR
2. TYPE OF RIP RAP
   A. REGULAR QUARRY STONE CLASS 50-200
   B. COBBLESTONE
   C. CONCRETE (ONLY ALLOWED UPON APPROVAL OF THE DISTRICT)
3. PLACEMENT
   A. MINIMUM DEPTH = 1 1/2 TIMES AVERAGE STONE SIZE
   B. ROCKS SHALL BE PLACED TO PROVIDE A MINIMUM OF VOIDS.
   C. SURFACE ROCKS OR CONCRETE SHALL PROTRUDE AT LEAST 1/2 THEIR VERTICAL DIMENSION.
   D. RIP RAP IS TO BE PLACED OVER A NATURAL BEDDING, OR IT MAY BE GROUTED OR PLACED OVER A GRAVEL BEDDING AS REQUIRED BY THE CITY.

Storm Sewer Outfall	
West Linn	DATE: JAN 2000
	DRAWING NO. WL-614
	FILE NO. 00-614

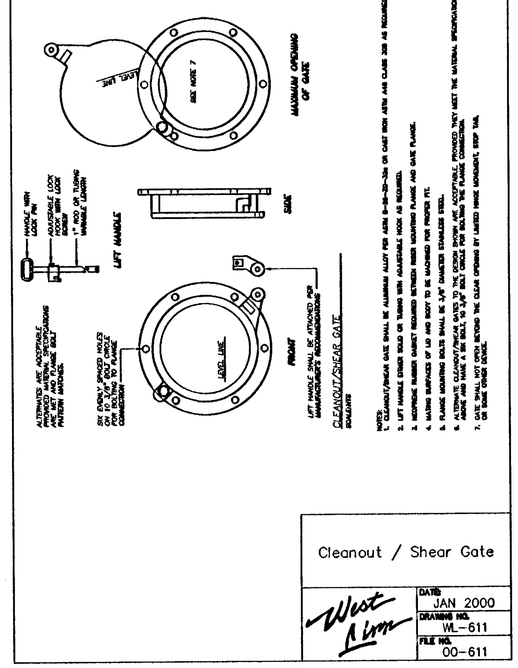

NOTES:
1. CLEANOUT/SHEAR GATE SHALL BE ALUMINUM ALLOY PER ASTM B-26-2G-32a OR CAST IRON ASTM A48 CLASS 30B AS REQUIRED.
2. LIFT HANDLE EITHER SOLID OR TUBING WITH ADJUSTABLE HOOK AS REQUIRED.
3. NEOPRENE RUBBER GASKET REQUIRED BETWEEN RISER MOUNTING FLANGE AND GATE FLANGE.
4. MATING SURFACES OF LID AND BODY TO BE MACHINED FOR PROPER FIT.
5. FLANGE MOUNTING BOLTS SHALL BE 3/8" DIAMETER STAINLESS STEEL.
6. ALTERNATE CLEANOUT/SHEAR GATES TO THE DESIGN SHOWN ARE ACCEPTABLE, PROVIDED THEY MEET THE MATERIAL SPECIFICATIONS ABOVE AND HAVE A SIX BOLT, 10 3/8" BOLT CIRCLE FOR BOLTING THE FLANGE CONNECTION.
7. GATE SHALL NOT OPEN BEYOND THE CLEAR OPENING BY LIMITED HINGE MOVEMENT, STOP TAB, OR SOME OTHER DEVICE.

Cleanout / Shear Gate	
West Linn	DATE: JAN 2000
	DRAWING NO. WL-611
	FILE NO. 00-611

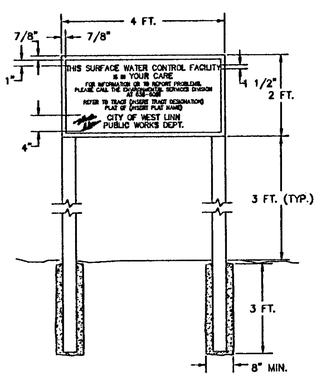

SPECIFICATIONS:

SIZE: 48" BY 24"
MATERIAL: GRADE "B" OR BETTER EXTERIOR PLYWOOD
PAINT: FACE - 3 COATS OUTDOOR ENAMEL (SPRAYED).
BACK - 1 COAT OUTDOOR ENAMEL (SPRAYED).
LETTERING: SILK SCREEN ENAMEL WHERE POSSIBLE, OR HAND PAINTED ENAMELS.
COLORS: BLACK AND WHITE. WHITE BACKGROUND, LETTERING AND BORDER IN BLACK
TYPE FACE: HELVETICA. 1 1/2" TALL WITH 7/8" SPACING BETWEEN LETTERS AND OUTER BORDER. OUTER BORDER 1/2" WIDTH
INSTALLATION: SECURED TO CHAIN LINK FENCE IF AVAILABLE, OTHERWISE INSTALL ON TWO 8 FT. LONG 4" X 4" POSTS, PRESSURE TREATED, INSTALLED IN 3 FT. DEEP CONCRETE FILLED POST HOLES (8" MIN. DIA.)

Surface Water Facility Sign	
West Linn	DATE: JAN 2000
	DRAWING NO. WL-615
	FILE NO. 00-615

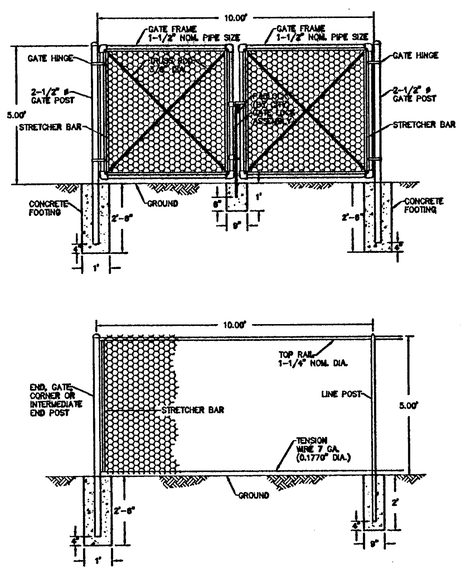

NOTES:
1. BLACK POWDER COATING ON ALL HARDWARE AND ACCESSORIES IS REQUIRED.
2. ALL MATERIAL AND WORKMANSHIP SHALL BE IN ACCORDANCE WITH THE CURRENT STATE OF OREGON STANDARD SPECIFICATIONS FOR HIGHWAY CONSTRUCTION.

Surface Water Facility Fence	
West Linn	DATE: JAN 2000
	DRAWING NO. WL-616
	FILE NO. 00-616

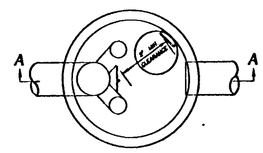

PLAN VIEW

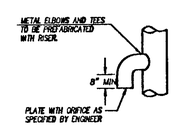

ELBOW DETAIL

SIZE OF ORIFICES TO BE AS SHOWN AND WELDED TO ALUMINUM STANDPIPE.

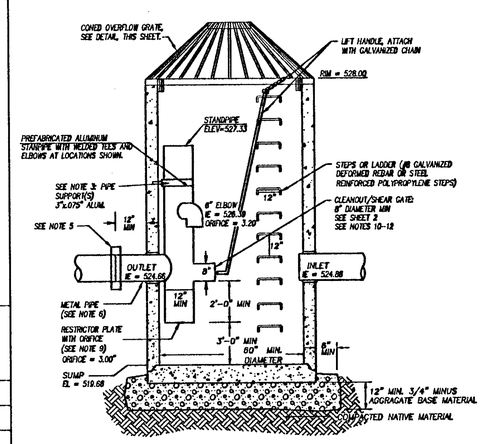

SD FCMH 02B

SECTION "A-A" 60"Ø FLOW CONTROL MANHOLE

N.T.S

NOTES

1. EXCEPT AS SHOWN OR NOTED, UNITS SHALL BE CONSTRUCTED IN ACCORDANCE WITH THE STANDARD SPECIFICATIONS FOR PUBLIC WORKS CONSTRUCTION.
2. FLAT TOP SHALL BE H-20 LOAD RATED WITH NO COVER.
3. PIPE SUPPORTS AND RESTRICTOR/SEPARATOR SHALL BE OF THE SAME MATERIAL, AND BE ANCHORED AT 3' MAX SPACING BY 5/8" DIA. STAINLESS STEEL EXPANSION BOLTS OR EMBEDDED 2" IN WALL.
4. THE RESTRICTOR/SEPARATOR SHALL BE FABRICATED FROM .060" (MM) ALUMINUM, IN ACCORDANCE WITH THE APPLICABLE SECTIONS OF AASHTO M 38, M 196, M197, AND M 274.
5. OUTLET SHALL BE CONNECTED TO CULVERT OR SEWER PIPE WITH A STANDARD COUPLING BAND FOR CORRUGATED METAL PIPE, OR GROUTED INTO THE BELL OF CONCRETE PIPE.
6. THE VERTICAL RISER STEM OF THE R ESTRICTOR/SEPARATOR SHALL BE THE SAME DIAMETER AS THE HORIZONTAL OUTLET PIPE, WITH A 12" MINIMUM DIAMETER.
7. FRAME AND LADDER OR STEPS ARE TO BE OFFSET SO THAT:
   A. CLEANOUT GATE IS VISIBLE FROM TOP.
   B. CLIMB-DOWN SPACE IS CLEAR OF RISER AND GATE.
   C. FRAME IS CLEAR OF CURB (IF ANY EXISTS).
8. MULTI-ORIFICE ELBOWS MAY BE LOCATED AS SHOWN OR ALL ON ONE SIDE OF RISER TO ASSURE LADDER CLEARANCE. SIZE OF ELBOWS AND PLACEMENT TO BE DETERMINED BY THE ENGINEER.
9. RESTRICTOR PLATE WITH ORIFICE AS SPECIFIED IN THE CONTRACT PLANS. SPECIFIED OPENING TO BE CUT ROUND AND SMOOTH.
10. CLEANOUT/SHEAR GATE: ALUMINUM ALLOY PER ASTM B-26-2G-32a OR CAST IRON ASTM A48 CLASS 30B AS REQUIRED. LIFT HANDLE EITHER SOLID OR TUBING WITH ADJUSTABLE HOOK AS REQUIRED. NEOPRENE RUBBER GASKET REQUIRED BETWEEN RISER MOUNTING FLANGE AND GATE FLANGE. MATING SURFACES OF LID AND BODY TO BE MACHINED FOR PROPER FIT. FLANGE MOUNTING BOLTS SHALL BE 3/8" DIA STAINLESS
11. ALTERNATE CLEANOUT/SHEAR GATES TO THE DESIGN SHOWN ON THIS SHEET ARE ACCEPTABLE, PROVIDED THEY MEET THE MATERIAL SPECIFICATIONS ABOVE AND HAVE A SIX BOLT, 10 3/8" BOLT CIRCLE FOR BOLTING THE FLANGE CONNECTION.
12. GATE SHALL NOT OPEN BEYOND THE CLEAR OPENING BY LIMITED HINGE MOVEMENT, STOP TAB, OR SOME OTHER DEVICE.
13. PRECAST CONCRETE MANHOLE CONSTRUCTED IN ACCORDANCE WITH ASTM C478.
14. SEE THIS SHEET FOR DETAILS ON ELBOW AND FOR PLAN VIEW.

AS-BUILT
DATE JMK 4-29-11

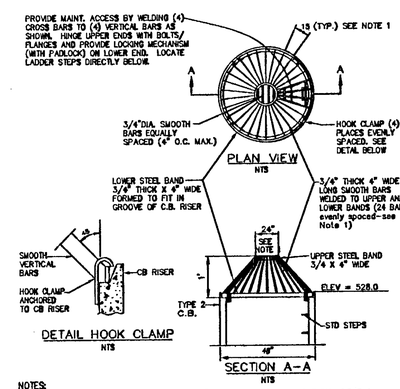

NOTES:
1. DIMENSIONS ARE FOR INSTALLATION ON 54" DIA. C.B. FOR DIFFERENT DIA. C.B.'S A DIMENSIONS TO MAINTAIN 45 ANGLE ON "VERTICAL" BARS AND 7" O.C. MAX. SPACING OF BARS AROUND LOWER STEEL BAND.
2. METAL PARTS: CORROSION RESISTANT.
3. THIS DEBRIS BARRIER IS ALSO RECOMMENDED FOR USE ON THE INLET TO ROADWAY CROSS-CULVERTS WITH HIGH POTENTIAL FOR DEBRIS COLLECTION (EXCEPT ON CLASS 2 S

SD FCMH 02B

OVERFLOW GRATE FOR FLOW CONTROL MANHOLE SD FCMH 02B

N.T.S

SFA Design Group, LLC
STRUCTURAL | CIVIL | LAND USE PLANNING
9020 SW Washington Square Dr. Suite 350
Portland, Oregon 97223
p: (503) 641-8311 f: (503) 643-7005
sfadesigngroup.com

CONSTRUCTION DETAILS
CHINOOK TERRACE SUBDIVISION
WEST LINN, OREGON

THE DETAILS ON THIS SHEET WERE PREPARED BY PUBLIC AGENCIES AND EQUIPMENT SUPPLIERS. THE RESPONSIBILITY OF THE PROJECT ENGINEER IS LIMITED TO THE SELECTION OF THESE DETAILS AS APPROPRIATE TO THE PROJECT.

NO.	DATE	REVISION	BY
0	11/06/06	INITIAL SUBMITTAL	
1	03/19/07	REVISED PER CITY COMMENTS	
2	05/09/07	REVISED PER CITY COMMENTS	
3	05/29/07	REVISED PER CITY COMMENTS	
4	11/7/07	AS-BUILT REVISIONS	JDF
5	4/29/11	AS-BUILT REVISIONS	JMK

DESIGNED BY BEF DATE 9/06
DRAWN BY RMW DATE 9/06
REVIEWED BY BEF DATE 9/06
PROJECT NO. 271-001 REF. ____
SCALE N/A N/A

SHEET 13 OF 13

PROJECT CHINOOK TERRACE
NO. 271-001
TYPE AS-BUILTS

dburnett, Plotted: May 23, 2011 - 9:23am, B:\Land Projects 2004\271-001\const mgmt\AS-BUILTS 4-27-11\0611_13de1k.dwg

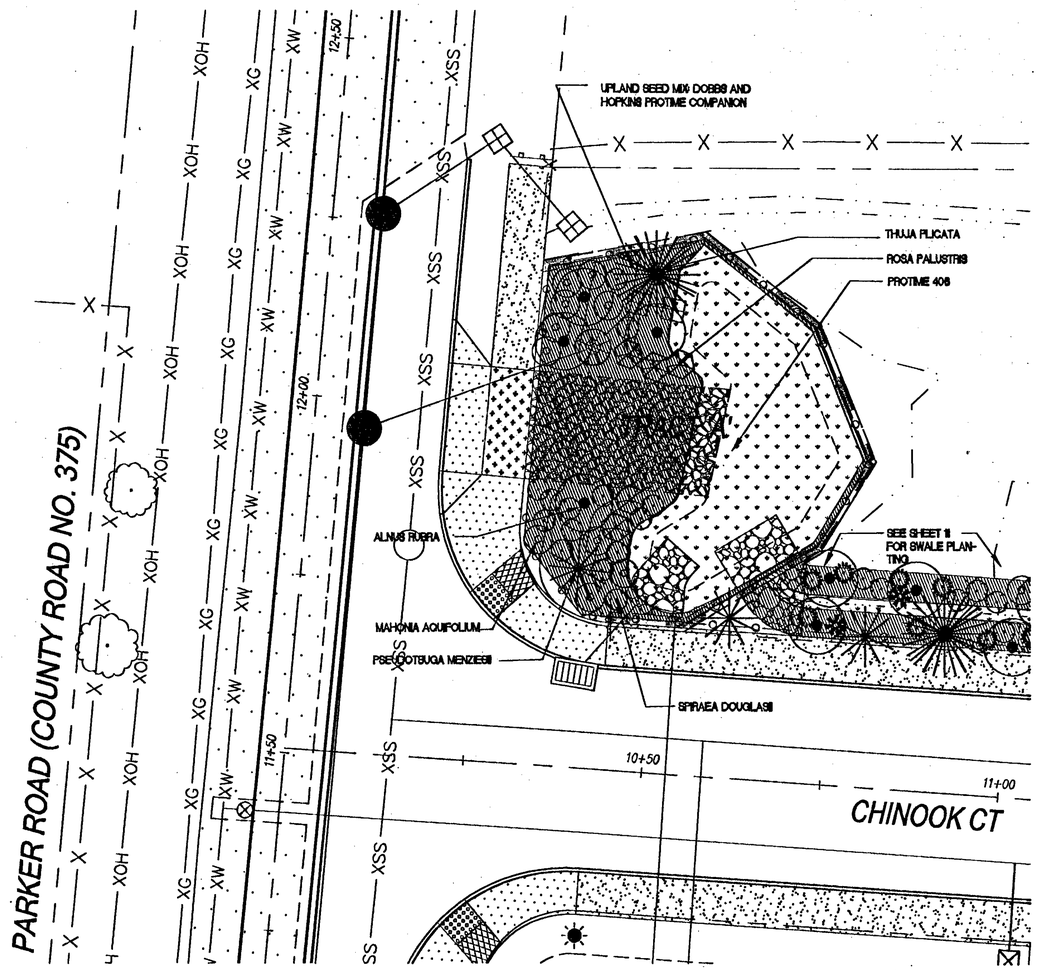

WATER QUALITY AREA PLANTING PLAN

1" = 10'-0"

	QTIES	COMMON & BOTANICAL NAME	SIZE & CONDITION
	1	WESTERN RED CEDAR THUJA PLICATA	5'-6' CONT./10' O. C.
	1	DOUGLAS FIR PSEUDOTSUGA MENZIESII	5'-6' CONT./10' O. C.
	4	RED ALDER ALNUS RUBRA	1" CAL.
	5	SWAMP ROSE ROSA PALUSTRIS	1 GAL. @ 4' O.C.
	10	DULL OREGON GRAPE BERBERIS NERVOSA	2 GAL. @ 4' O.C.
	14	DOUGLAS SPIRAEA SPIREA DOUGLASII	1 GAL. @ 36" O.C.

WET AREA SEED MIX - SEE NOTE FOR LOCATION- PROTIME 406

952 SF	AMERICAN SLOUGHGRASS/BECKMANNIA SYZIGACHNE	45%
	WESTERN MANNAGRASS/GLYCERIA OCCIDENTALIS	45%
	COMMON RUSH /JUNCUS BALTICUS	5%
	SLOUGH SEDGE/CAREX OBNUPTA	5%

UPLAND SEED MIX - HOBBS & HOPKINS PROTIME COMPANION MIX SEE NOTE FOR LOCATION

968 SF	DWARF PERENNIAL RYE GRASS LOLIUM PERENNE	80%
	CREEPING RED FESCUE FESTUCA RUBRA	20%

NOTES:

1. CONTRACTOR IS RESPONSIBLE FOR CHECKING QUANTITIES OF PLANT MATERIAL. IF DISCREPANCIES OCCUR, DESIGN INTENT PREVAILS OVER QUANTITIES SHOWN.

2. STAGGER PLANTINGS SO THAT GROWTH LOOKS NATURAL.

3. TO ALL DISTURBED AREAS: APPLY UPLAND SEED MIX EXCEPT AS SHOWN ON PLAN.

4. WATER QUALITY AREA PLANTS AND PLANTING SHALL CONFORM TO WEST LINN STORM WATER QUALITY AND DETENTION STANDARDS 33.000. ALL OTHER PLANTINGS TO CONFORM TO AMERICAN NURSERY STANDARDS ANS 1260.1. PLANT IN ACCORDANCE TO STANDARDS ADOPTED BY OREGON LANDSCAPE CONTRACTORS BOARD OLCB.

5. SEE CIVIL ENGINEERING DRAWINGS FOR STORMWATER POND ELEVATIONS, FENCE LINE, AND OTHER SPECIFIC INFORMATION.

6. MAINTAIN DURING THE FULL WARRANTY PERIOD OR UNTIL PLANTS ARE ESTABLISHED WHICHEVER IS FIRST.

7. AREA TO BE WATERED BY TEMPORARY IRRIGATION FED FROM WATER METER. PROVIDE DOUBLE CHECK VALVE. FINAL HEAD AND PIPE LAYOUT TO BE INCLUDED WITH FINAL PLANS.

8. WET AREA SEED MIX SHALL BE SUBSTITUTED WITH PLUGS AND CONTAINERS WHEN AREA IS SATURATED AND/OR FROM OCTOBER 1-MARCH 15. PLANTS TO BE SPACED AT 12" TO 24" O. C.

GRAPHIC SCALE

(IN FEET)
1 inch = 10 ft.

PERRON COLLABORATIVE
PLANNING
VISIONING
LANDSCAPE
ARCHITECTURE
Union Station, Suite 326
509 NW Sixth Avenue
Portland, OR 97209-3706
Tel.503.223.6268
Fax.503.223.3217
robert@perroncollaborative.com

SFA Design Group,
STRUCTURAL | CIVIL | LAND USE PLAN
9600 SW Washington Square Dr. Su
Portland, Oregon 97223
p: (503) 641-5311 f: (503) 643-70
sfadesigngroup.com

WATER QUALITY, DETENTION & WETLAND PLANTING PLAN

PARKER ROAD SUBDIVISION
WEST LINN, OREGON

REGISTERED LANDSCAPE ARCHITECT
ROBERT P. PERRON
OREGON

NO.	DATE	REVISION	BY

DESIGNED BY JHVL DATE 12/04/06
DRAWN BY VL DATE 12/04/06
REVIEWED BY RP DATE 12/04/06
PROJECT NO. 106-011 REF.
SCALE 1"=10' N/A

SHEET L1 OF L2

PROJECT PARKER ROAD

QTY	COMMON & BOTANICAL NAME	SIZE & CONDITION
8	DOUGLAS FIR PSEUDOTSUGA MENZIESII	5'-6' CONT./10' O. C.
16	WESTERN RED CEDAR THUJA PLICATA	5'-8' CONT./10' O. C.
31	RED ALDER ALNUS RUBRA	1" CAL.
21	SWAMP ROSE ROSA PALUSTRIS	1 GAL. @ 4' O.C.
14	DULL OREGON GRAPE BERBERIS NERVOSA	2 GAL. @ 4' O.C.
34	DOUGLAS SPIRAEA SPIREA DOUGLASII	1 GAL. @ 36" O.C.
61	SWORD FERN POLYSTICUM MUNITUM	1 GAL. @ 36" O.C.
13	SCOULER WILLOW SALIX SCOULERIANA	1 GAL. @ 36" O.C.

WET AREA SEED MIX - SEE NOTE FOR LOCATION- PROTIME 406

780 SF	AMERICAN SLOUGHGRASS/BECKMANNIA SYZIGACHNE	45%
	WESTERN MANNAGRASS/GLYCERIA OCCIDENTALIS	45%
	COMMON RUSH /JUNCUS BALTICUS	5%
	SLOUGH SEDGE/CAREX OBNUPTA	5%

UPLAND SEED MIX - HOBBS & HOPKINS PROTIME COMPANION MIX SEE NOTE FOR LOCATION

3,780 SF	DWARF PERENNIAL RYE GRASS LOLIUM PERENNE	80%
	CREEPING RED FESCUE FESTUCA RUBRA	20%

NOTES:

1. CONTRACTOR IS RESPONSIBLE FOR CHECKING QUANTITIES OF PLANT MATERIAL. IF DISCREPANCIES OCCUR, DESIGN INTENT PREVAILS OVER QUANTITIES SHOWN.
2. STAGGER PLANTINGS SO THAT GROWTH LOOKS NATURAL.
3. TO ALL DISTURBED AREAS: APPLY UPLAND SEED MIX EXCEPT AS SHOWN ON PLAN.
4. WATER QUALITY AREA PLANTS AND PLANTING SHALL CONFORM TO WEST LINN STORM WATER QUALITY AND DETENTION STANDARDS 33.000. ALL OTHER PLANTINGS TO CONFORM TO AMERICAN NURSERY STANDARDS ANS 1260.1. PLANT IN ACCORDANCE TO STANDARDS ADOPTED BY OREGON LANDSCAPE CONTRACTORS BOARD OLCB.
5. SEE CIVIL ENGINEERING DRAWINGS FOR STORMWATER POND ELEVATIONS, FENCE LINE, AND OTHER SPECIFIC INFORMATION.
6. MAINTAIN ALL PLANTINGS DURING THE FULL WARRANTY PERIOD OR UNTIL PLANTS ARE ESTABLISHED WHICHEVER IS FIRST.
7. AREA TO BE WATERED BY TEMPORARY IRRIGATION FED FROM WATER METER. PROVIDE DOUBLE CHECK VALVE. FINAL HEAD AND PIPE LAYOUT TO BE INCLUDED WITH FINAL PLANS.
8. WET AREA SEED MIX SHALL BE SUBSTITUTED WITH PLUGS AND CONTAINERS WHEN AREA IS SATURATED AND/OR FROM OCTOBER 1-MARCH 15. PLANTS TO BE SPACED FROM 12" TO 24" O. C.

PERRON COLLABORATIVE
PLANNING
VISIONING
LANDSCAPE
ARCHITECTURE
Union Station, Suite 328
502 NW Sixth Avenue
Portland, OR 97209-3706
Tel.503.228.5266
Fax.503.228.3219
robert@perroncollaborative.com

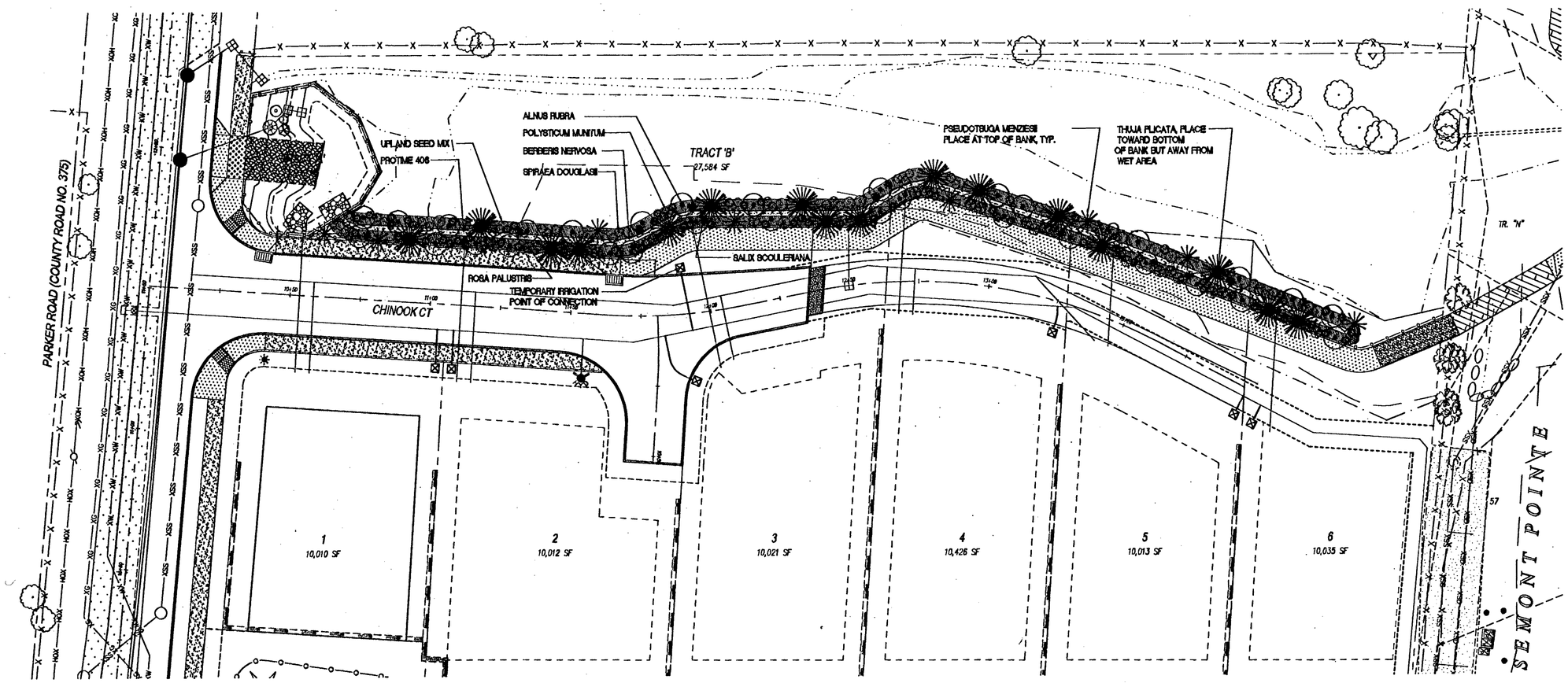

SWALE AREA PLANTING PLAN

1" = 20'-0"

GRAPHIC SCALE

(IN FEET)
1 inch = 20 ft.

SFA Design Group,
STRUCTURAL | CIVIL | LAND USE PLAN
9600 SW Washington Square Dr. Ste
Portland, Oregon 97223
p: (503) 641-5311 f: (503) 643-70
sfadesigngroup.com

WATER QUALITY, DETENTION & WETLAND PLANTING PLAN

PARKER ROAD SUBDIVISION

WEST LINN, OREGON

REGISTERED LANDSCAPE ARCHITECT
ROBERT P. PERRON
OREGON

NO.	DATE	REVISION	BY

DESIGNED BY VL DATE 12/24/08
DRAWN BY VL DATE 12/24/08
REVIEWED BY RP DATE 12/24/08
PROJECT NO. 106-011 REF.
SCALE 1"=20'
N/A

SHEET L2 OF L2

PROJECT PARKER ROAD

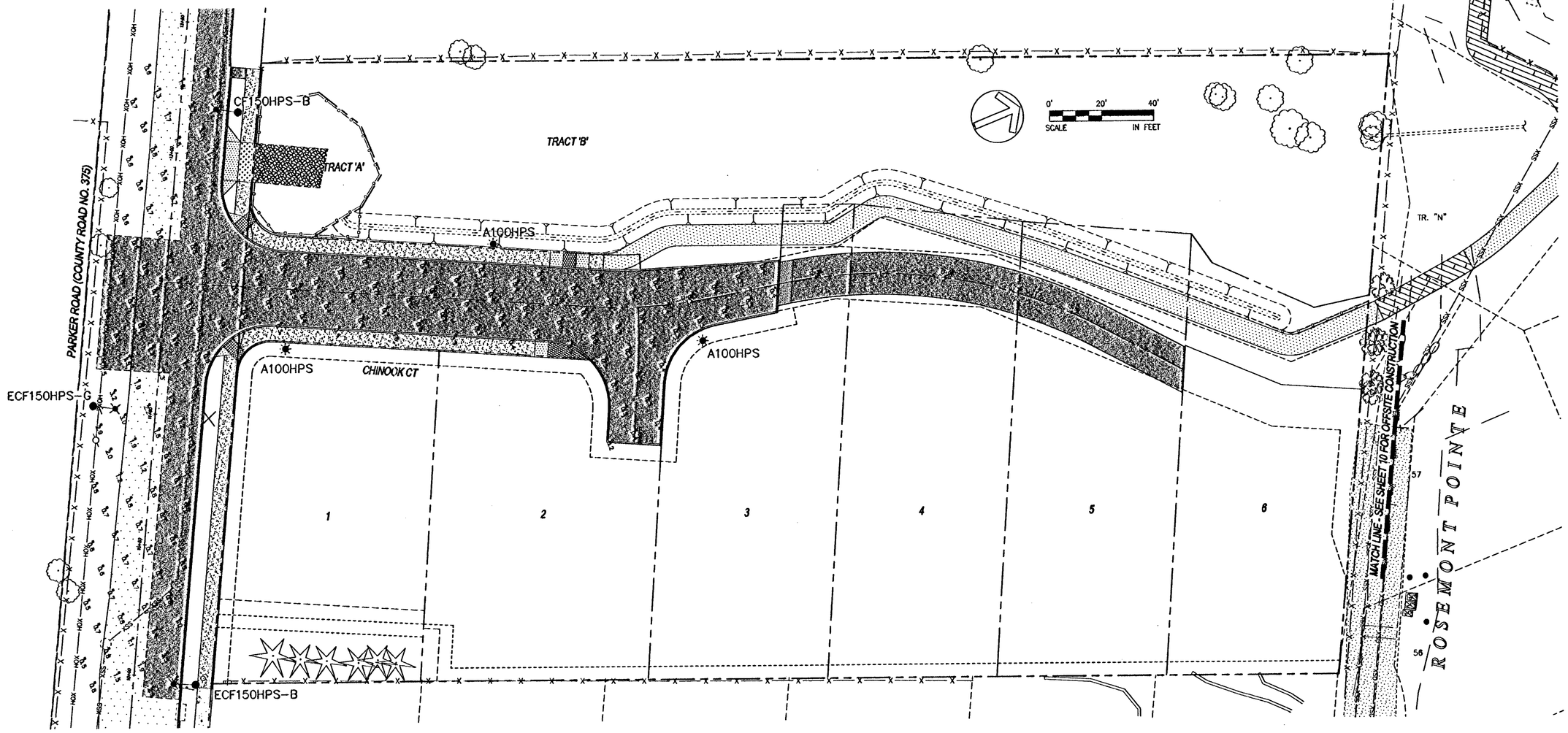

AS-BUILT
DATE JMK 4-29-11

Luminaire Schedule						
Symbol	Qty	Label	Arrangement	Lumens	LLF	Description
✳	3	A100HPS	SINGLE	9500	0.690	100 HPS ACORN / 14FT FLUTED POLE
●—✳	1	CF150HPS-B	SINGLE	16000	0.690	150HPS COBRA HEAD FLAT LENS BRONZE / 30FT. BRONZE POLE
●—✳	1	ECF150HPS-G	SINGLE	16000	0.690	150HPS COBRA HEAD FLAT LENS GRAY EXISTING
●—✳	1	ECF150HPS-B	SINGLE	16000	0.690	150HPS COBRA HEAD FLAT LENS BRONZE EXISTING

Numeric Summary							
Label	CalcType	Units	Avg	Max	Min	Avg/Min	Max/Min
A	Illuminance	Fc	0.42	0.7	0.2	2.10	3.50

NOTES

1. LIGHT POLES SHALL BE PGE APPROVED
   14FT FLUTED POLE WITH DECORATIVE BASE
   BLACK FINISH

   PGE APPROVED LIGHT POLES ARE:
   DYNAMIC D1305-14-FB-BLACK

2. JUNCTION BOXES SHALL BE PGE APPROVED SPLICE BOXES.

   PGE APPROVED JUNCTION BOXES ARE:
   ASSOCIATED PLASTICS PCA13241BA232
   QUAZITE PG-1324-ZS01-B4

   "ELECTRIC" OR "POWER" SHALL BE IN THE LID MARKING AREA.

3. LUMINARIES SHALL BE PGE APPORVED
   100HPS ACORN LUMINAIRE WITH FINIAL,
   AND TWIST LOCK RECEPTACLE BLACK

   PGE FIXTURES ARE:
   GE P7RF105JH21HASRLCK00B TYPE A100HPS

4. THE PHOTOELECTRIC CONTROL SHAL BE PGE APPROVED
   TWISTLOCK, FAIL-ON, ELECTRONIC 105-300 VAC, 50 HZ,
   PER ANSI136.10, BRONZE HOUSING, 1.5 LUMON TURN-ON,
   RATED 1000W TUNGSTEN (1800 VA BALLAST 1.5:1
   TURN-OFF/TURN-ON RATIO, SOLID BRASS PLUG BLADES,
   CONFORMALLY COATED CDS CELL, 160 JOULE MOV, 2-4
   SEC. TURN-OFF DELAY

   PGE APPROVED PHOTOELECTRIC CONTROLS ARE:
   DTL D124-1.5-SMBR
   SOUTH CONN 6390BRZ-PGE
   TYCO (ALR) 6290NPS-BR
   TORK 5217-BR
   SUN-TECH S124-1.5-STM-BR
   FISHER PIERCE FP7370C-MCBR

5. THE WIRING FROM THE SPLICE BOX TO THE LUMINARE
   SHALL BE PGE APPROVED #10AWG, 600-VOLT,
   3-CONDUCTOR, TYPE TC WITH SUNLIGHT RESISTANT JACKET,
   45-MIL JACKET, SUITABLE FOR DIRECT BURIED
   APPLICATIONS. RATED 90C DRY AND 75C WET.

   FOR 240-VOLT APPLICATIONS, THE PGE WIRING
   CONFIGURATION IS:
   BLACK AND RED (HOT)
   GREEN (GROUND)

6. LAMPS SHALL BE HPS, NON-CYCLING, TCLP COMPLIANT,
   PGE APPROVED LAMPS ARE:

   100W GENERAL ELECTRIC LU100/ECO/MC
   100W SYLVANIA LU100/PLUS/ECO

7. ARMS SHALL BE: NONE

8. LIGHTING DETAILS
   DETAIL D

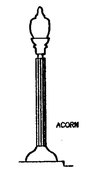

FIXTURE DETAIL D

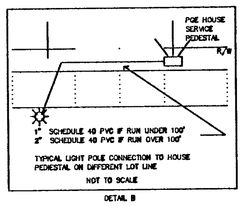

DETAIL B

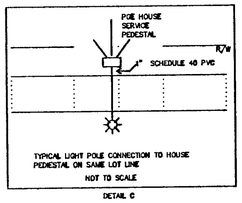

DETAIL C

PARKER ROAD

02-09-07

Street Lighting Design by:
LIGHTWORKS ELECTRIC COMPANY
19290 SW Conzelmann RD
Sherwood, Or 97140
Phone 503-625-1953
Fax 503-625-2890

SFA Design Group, LLC
STRUCTURAL | CIVIL | LAND USE PLANNING
9600 SW Washington Square Dr. Suite 300
Portland, Oregon 97223
p: (503) 641-8311 f: (503) 643-7555
sfadesigngroup.com

LIGHTING PLAN
CHINOOK TERRACE SUBDIVISION
WEST LINN, OREGON

THE DETAILS ON THIS SHEET WERE PREPARED BY PUBLIC AGENCIES AND EQUIPMENT SUPPLIERS. THE RESPONSIBILITY OF THE PROJECT ENGINEER IS LIMITED TO THE SELECTION OF THESE DETAILS AS APPROPRIATE TO THE PROJECT.

NO.	DATE	REVISION	BY
0	11/06/06	INITIAL SUBMITTAL	
1	03/19/07	REVISED PER CITY COMMENTS	
2	05/09/07	REVISED PER CITY COMMENTS	
3	05/29/07	REVISED PER CITY COMMENTS	
4	11/7/07	AS-BUILT REVISIONS	JJF
5	4/29/11	AS-BUILT REVISIONS	JMK

DESIGNED BY BEF DATE 9/06
DRAWN BY RMW DATE 9/06
REVIEWED BY BEF DATE 9/06
PROJECT NO. 271-001 REF. ____
SCALE 1"=20' N/A

SHEET E1 OF E1

PROJECT CHINOOK TERRACE
NO. 271-001
TYPE AS-BUILTS

dburnett, Plotted: May 23, 2011 - 9:24am, B:\Land Projects 2004\271-001\const mgmt\AS-BUILTS 4-27-11\10611_14light.dwg

GENERAL REQUIREMENTS

GOVERNING CODE: The "International Building Code", 2003 Edition, as adopted and modified by City of West Linn shall govern design and construction.

REFERENCE STANDARDS: Reference to ASTM and other standards incorporate these standards into the contract as though included in their entirety. Reference to a specific Section does not relieve the contractor from compliance with the entire standard. The latest edition of the standard shall be used unless a specific date is indicated.

DEFINITIONS: The following definitions cover the meanings of certain terms used in these notes:

"Engineer" - The Engineer-of-Record.

NOTE PRIORITIES: Notes on the individual drawings govern over notes on this sheet.

STRUCTURAL DETAILS: The structural drawings are intended to show the general character and extent of the project. They are not intended to show all details of the work. Details noted "typical" apply to similar work throughout the project unless noted separately.

STRUCTURAL RESPONSIBILITIES: The structural engineer is responsible for the strength and stability of the primary structure in its completed form.

SITE VERIFICATION: The contractor shall verify all dimensions and conditions at the site. Conflicts between the drawings and actual site conditions shall be brought to the attention of the Engineer before proceeding with the work.

ALTERNATES: Alternates for specified items may be submitted to the Architect/Engineer for review.

SPECIAL INSPECTION PROGRAM

INSPECTIONS: All construction is subject to inspection by the Building Official in accordance with IBC Sec 109. The contractor shall coordinate all required inspections with the Building Official.

SPECIAL INSPECTIONS: In addition to the inspections required by IBC Sec 109, the owner or architect shall employ special inspectors to provide special inspections during construction as summarized in the following table. The contractor shall provide sufficient notice and access for the special inspector to perform these special inspections.

ESTABLISHED PER 2003 IBC CHAPTER 17

VERIFICATION AND INSPECTION	CONTINUOUS	PERIODIC
CONCRETE		
1) Verification of Mix Design		X
2) Preparation of Test Specimens	X	
3) Placement of Reinforcement		X
4) Concrete Placement	X	
SOILS		
1) Site Preparation for and During Placement and Compaction of Structural Fill Material >12" Deep		X
2) Verification of In-Place Dry Density of Compacted Structural Fill Per Approved Soils Report		X

Notes:

1) Items with an "X" shall be inspected in accordance with IBC Chapter 17 by a qualified special inspector.
2) Continuous special inspection means that the special inspector is on site at all times observing the work requiring special inspection. Periodic special inspection means that the special inspector is on site at time intervals necessary to confirm that the work requiring special inspection is in compliance.
3) Any discrepancies found during special inspection shall be brought to the immediate attention of the contractor for correction. If discrepancies are not corrected, notify the building official and Architect/Engineer.
4) Prefabricated construction special inspections are not required where the work is done on the premises of a fabricator registered and approved to perform such work without special inspection.

INSPECTION SUBMITTALS: The special inspector shall submit copies of all special inspection reports to the Architect/Engineer for review.

STRUCTURAL OBSERVATION: The owner shall employ the engineer responsible for the structural design to perform a visual observation of the structural system for general conformance to the approved construction documents. The contractor shall coordinate with the Architect/Engineer to schedule for structural observation at significant construction stages and at completion of the structural system.

SOILS AND FOUNDATIONS

REFERENCE STANDARDS: Conform to IBC Chapter 18 "Soils & Foundations."

SOILS REPORT: Recommendations contained in Geotechnical Engineering Report Proposed Parker Road West Linn, Oregon by GeoDesign Inc., dated January 30, 2007 was used for design.

SOILS INSPECTION: The Soils Engineer shall inspect all prepared soil bearing surfaces prior to placement of concrete and reinforcing steel and verify that soils are adequate to support the "Allowable Foundation Pressure" shown below.

DESIGN SOIL VALUES:

Allowable Foundation Pressure	2500 PSF
Passive Lateral Pressure	250 PSF/FT
Active Lateral Pressure (unrestrained)	45 PSF/FT
Coefficient of Sliding Friction	0.30

FOOTING DEPTH: Exterior perimeter footings shall bear not less than 18 inches below finish grade, or by the geotechnical engineer and the building official.

CAST-IN-PLACE CONCRETE

REFERENCE STANDARDS: Conform to:

(1) ACI 301-99 "Specifications for Structural Concrete".
(2) IBC Chapter 19 "Concrete".

FIELD REFERENCE: Keep in contractor's field office a copy of ACI Field Reference manual, SP-15(99), "Standard Specifications for Structural Concrete (ACI 301) with Selected ACI and ASTM References".

CONCRETE MIXTURES: Conform to ACI 301 Sec 4 "Concrete Mixtures".

MATERIALS: Conform to ACI 301 Sec 4.2.1 "Materials" for requirements for cementitious materials, aggregates, mixing water and admixtures.

SUBMITTALS: Provide all submittals required by ACI 301 Sec 4.1.2. Submit mix designs for each mix in the table below.

TABLE OF MIX DESIGN REQUIREMENTS

Member Type/Location	Test (psi)	Strength Age (Days)	Max Aggr. (Inch)	Max W/C Ratio	Air Cont. (%)
Foundations	3000	28	1	—	—
Retaining Walls	3000	28	1	0.50	—

Mix Design Notes:

(1) W/C Ratio: Water-cementitious material ratios shall be based on the total weight of cementitious materials. Ratios not shown in the table above are controlled by strength requirements.

(2) Cementitious Content:
a) The use of fly ash, other pozzolans, silica fume, or slag shall conform to ACI 301 Sec 4.2.2.8.b.

(3) Air Content: Conform to ACI 301 Sec 4.2.2.4. Horizontal exterior surfaces in contact with the soil require entrained air.

(4) Slump: Conform to ACI 301 Sec 4.2.2.2. Slump shall be determined at point of placement.

FORMWORK: Conform to ACI 301 Sec 2 "Formwork and Form Accessories". Removal of Forms shall conform to Sec 2.3.2 except strength indicated in Sec 2.3.2.5 shall be 0.75 f'c.

MEASURING, MIXING, AND DELIVERY: Conform to ACI 301 Sec 4.3.

HANDLING, PLACING, CONSTRUCTING AND CURING: Conform to ACI 301 Sec 5.

TESTING AND ACCEPTANCE:

Testing: Obtain samples and conduct tests in accordance with ACI 301 Sec 1.6.4.2. Additional samples may be required to obtain concrete strengths at alternate intervals than shown below. A "test" for acceptance is the average strength of the two cylinders tested at the specified test age.

Mold and cure 3 cylinders for 28 day test age. Test one at 7 days and 2 at 28 days.

Acceptance: Strength is satisfactory if:

(1) The averages of all sets of 3 consecutive tests equal or exceed the specified strength.
(2) No individual test falls below the specified strength by more than 500 psi.

CONCRETE REINFORCEMENT

REFERENCE STANDARDS: Conform to:

(1) ACI 301-99 "Standard Specifications for Structural Concrete", Section 3 "Reinforcement and Reinforcement Supports".
(2) ACI SP-66 "ACI Detailing Manual" including ACI 315-99 "Details and Detailing of Concrete Reinforcement".
(3) CRSI MSP-1 "Manual of Standard Practice".
(4) ANSI/AWS D1.4 "Structural Welding Code - Reinforcing Steel".
(5) IBC Chapter 19, "Concrete".
(6) ACI 318-02 and ACI 318R-02.

SUBMITTALS: Conform to ACI 301 Sec 3.1.1 "Submittals, data and drawings". Submit placing drawings showing fabrication dimensions and locations for placement of reinforcement and reinforcement supports.

MATERIALS:

Reinforcing Bars	ASTM A615, Grade 60, deformed bars.
Bar Supports	CRSI MSP-1, Chapter 3 "Bar Supports".

PLACING: Conform to ACI 301, Sec 3.3.2 "Placement". Placing tolerances shall conform to IBC Sec 1907.5.2, "Tolerances."

CONCRETE COVER: Conform to the following cover requirements from IBC Table 1907.7.1 and ACI 301, Table 3.3.2.3:

Concrete cast against earth	3"
Concrete exposed to earth of weather	1½"

SPLICES: Conform to ACI 301, Sec 3.3.2.7. Refer to "Lap Splice Schedule" for typical splices. Splices shown on individual sheets control over the schedule. Use Class B splices unless noted.

FIELD BENDING: Conform to ACI 301 Sec 3.3.2.8. "Field Bending or Straightening". Bar sizes #3 through #5 may be field bent cold the first time. Other bars require preheating. Do not twist bars.

SFA Design Group, LLC
STRUCTURAL | CIVIL | LAND USE PLANNING
9020 SW Washington Square Dr., Suite 250
Portland, Oregon 97223
p: (503) 641-8611 f: (503) 643-7005
www.sfadesigngroup.com

PARKER ROAD SUBDIVISION
WEST LINN, OREGON

REGISTERED PROFESSIONAL ENGINEER — OREGON — 06-06-2006 — JEFFREY S. KISTLER
EXPIRES: 12-31-07

NO.	DATE	REVISION	BY
0	11/06/06	INITIAL SUBMITTAL	
1	03/19/07	REVISED PER CITY COMMENTS	

DESIGNED BY OM DATE 3/19/07
DRAWN BY STM DATE 3/19/07
REVIEWED BY JSF DATE 3/19/07
PROJECT NO. 07-012 REF.
SCALE

SHEET S1.1

PROJECT PARKER ROAD
NO. 07-012
TYPE

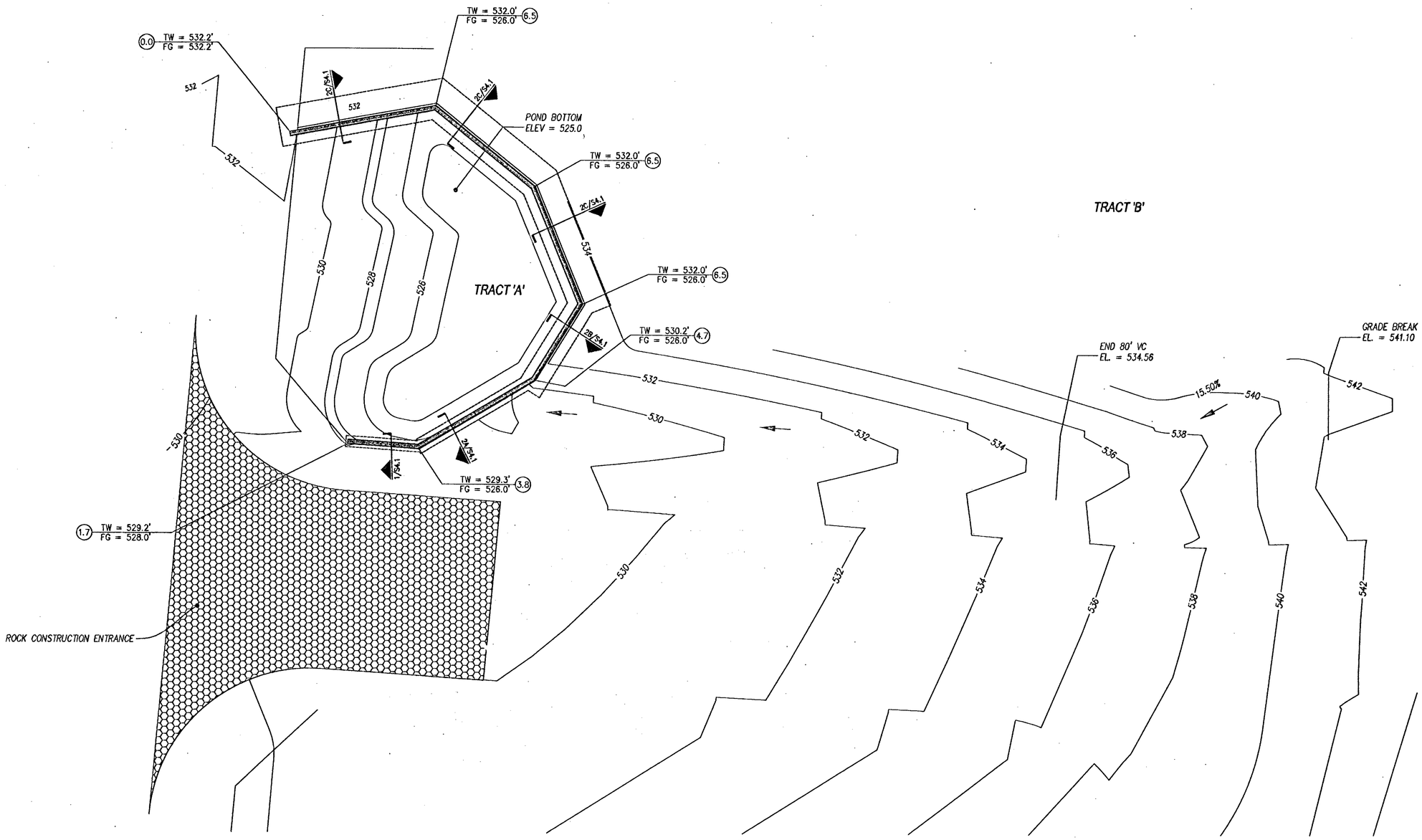

RETAINING WALL PLAN

SCALE: 1 1/2"=1'-0"

PLAN NOTES:

1. ALL WOOD EXPOSED TO CONCRETE, WEATHER, OR WITHIN 6" OF FINISHED GRADE SHALL BE PRESSURE-TREATED.
2. CONCRETE RETAINING WALLS SHALL BE CONSTRUCTED WITH 3000 PSI MINIMUM CONCRETE AND GRADE 60 STEEL REINFORCEMENT BARS.
3. EMBEDDED POST FOOTINGS SHALL BE CONSTRUCTED WITH 2500 PSI MINIMUM CONCRETE.
4. INDICATES REINFORCED CONCRETE RETAINING WALL. REFERENCE S4.1 FOR REQUIREMENTS.
5. X/SX.X SECTION CUT – DETAIL NUMBER/SHEET NUMBER.
6. T/FINISH GRADE PER CIVIL, TYP.
7. REF CIVIL DRAWINGS FOR INFORMATION NOT SHOWN, TYP.
7. ALL STEEL EXPOSED TO WEATHER SHALL BE HOT-DIPPED GALVANIZED. STEEL BOLTS SHALL BE A307.

SFA Design Group, LLC
STRUCTURAL | CIVIL | LAND USE PLANNING
6020 SW Washington Square Dr., Suite 350
Portland, Oregon 97223
p: (503) 644-3311 f: (503) 643-7005
www.sfadesigngroup.com

RETAINING WALL PLAN
PARKER ROAD SUBDIVISION
WEST LINN, OREGON

REGISTERED PROFESSIONAL ENGINEER
OREGON
JEFFREY S. FLECK
EXPIRES 12-31-07

NO.	DATE	REVISION	BY
0	11/06/06	INITIAL SUBMITTAL	
1	03/16/07	REVISED PER CITY COMMENTS	

DESIGNED BY CM DATE 3/19/07
DRAWN BY STM DATE 3/19/07
REVIEWED BY JSF DATE 3/19/07
PROJECT NO. 07-012 REF.
ISSUED FOR
N/A

SHEET S2.1

PROJECT PARKER ROAD
NO. 07-012
TYPE

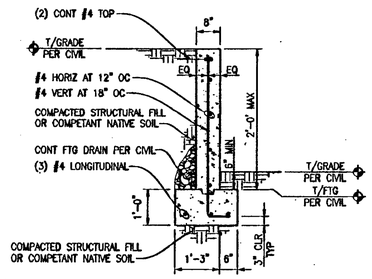

2' RETAINING WALL (NON-ROADWAY)

SCALE: 1/2"=1'-0" (1)

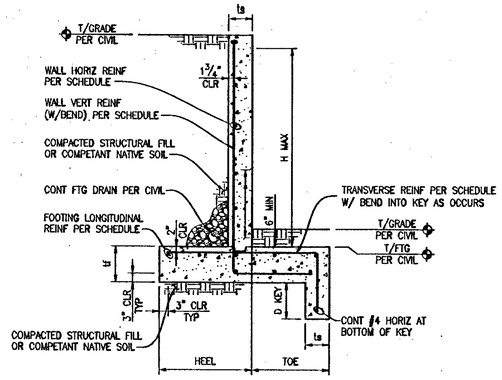

RETAINING WALL SCHEDULE

SCALE: 1/2"=1'-0" (2)

RETAINING WALL/FOOTING SCHEDULE										
WALL TYPE	H MAX	D KEY	TOE	ts	HEEL	tf	WALL REINF		FOOTING REINF	
							VERT	HORIZ	TRANSVERSE	LONGITUDINAL
2A	4'-0"	6"	1'-0"	8"	1'-6"	1'-0"	#4 AT 18" OC	#4 AT 12" OC	#4 AT 12" OC	(4) #4
2B	6'-0"	12"	1'-6"	8"	2'-9"	1'-0"	#5 AT 15" OC	#4 AT 12" OC	#4 AT 12" OC	(6) #4
2C	8'-0"	40"	1'-6"	8"	4'-6"	1'-2"	#6 AT 8" OC	#4 AT 12" OC	#4 AT 12" OC	(8) #4

f'c = 3000psi		CONCRETE COVER = 0.75 in		CONCRETE COVER = 1.00 in		CONCRETE COVER = 1.50 in		CONCRETE COVER = 2.00 in	
BAR SIZE	LAP CLASS	TOP	OTHER	TOP	OTHER	TOP	OTHER	TOP	OTHER
#4	A	22	17	18	14	18	14	18	14
	B	28	22	23	18	23	18	23	18
#5	A	32	25	26	20	22	17	22	17
	B	41	32	34	26	28	22	28	22
#6	A	43	33	35	27	26	20	26	20
	B	56	43	46	35	34	26	34	26

NOTES:

1. ALL LENGTHS ARE INCHES, ARE VALID FOR UNCOATED, 60 KSI REBAR IN NORMAL WEGHT CONCRETE WITH CENTER-TO CENTER SPACING GREATER THAN TWICE THE CONCRETE COVER FROM ANY ADJACENT FACE OF CONCRETE.
2. LAP SPLICE LENGTHS ARE MULTIPLES OF TENSION DEVELOPMENT LENGTHS; CLASS A = 1.0Ld AND CLASS B = 1.3Ld
3. DEVELOP ALL REINFORCING IN STRUCTURAL SLABS WITH Ld MIN.
4. TOP BARS ARE HORIZONTAL BARS WITH MORE THAN 12" OF CONCRETE CAST BELOW, OR AS NOTED ON DOCUMENTS.
5. UNO, ALL LAP SPLICES SHALL BE MINIMUM CLASS B OR CLASS B (TOP).
6. VALUES FOR LAP SPLICES NOTED ON DOCUMENTS SUPERCEDE THOSE ABOVE.

LAP SPLICE AND DEVELOPMENT LENGTH SCHEDULE FOR RETAINING WALLS AND FOOTINGS

SCALE: NONE (3)

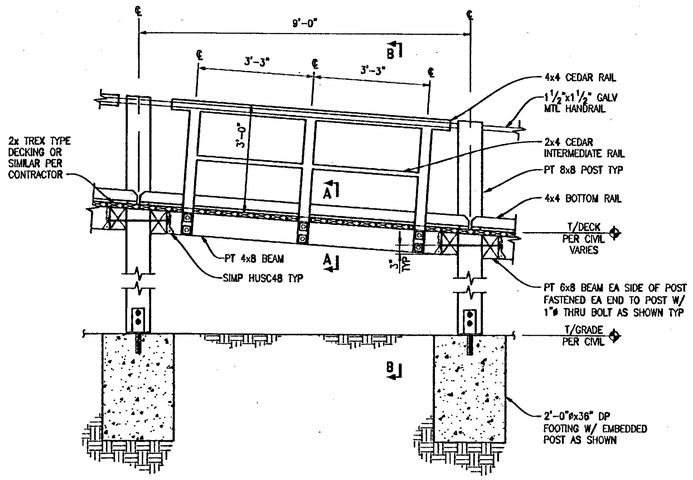

BOARDWALK CROSS SECTION

SCALE: 1/2"=1'-0" (4)

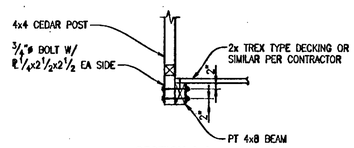

SECTION A-A

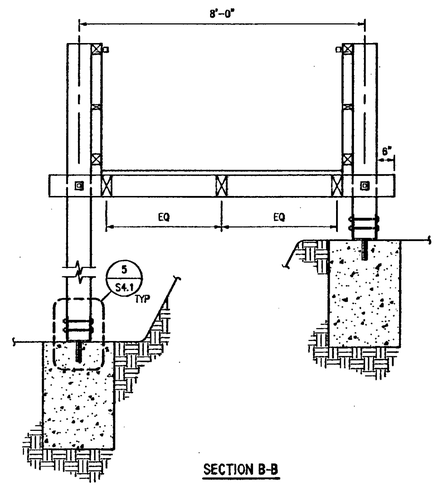

SECTION B-B

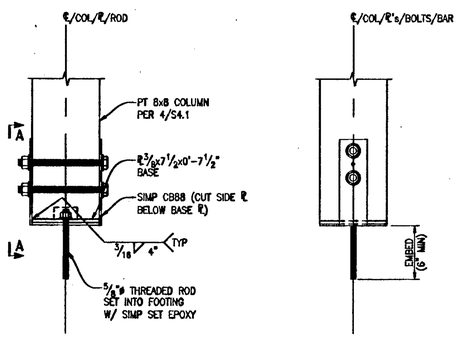

SECTION A-A

COLUMN HOLDOWN DETAIL

SCALE: 1 1/2"=1'-0" (5)

SFA Design Group, LLC
STRUCTURAL | CIVIL | LAND USE PLANNING
9020 SW Washington Square Dr., Suite 350
Portland, Oregon 97223
p: (503) 641-8311 f: (503) 643-7065
www.sfadesigngroup.com

RETAINING WALL & BOARDWALK DETAILS
PARKER ROAD SUBDIVISION
WEST LINN, OREGON

REGISTERED PROFESSIONAL ENGINEER — OREGON — JEFFREY B. TITUS — EXPIRES: 12-31-07

NO.	DATE	REVISION	BY
0	11/06/06	INITIAL SUBMITTAL	
1	03/19/07	REVISED PER CITY COMMENTS	

DESIGNED BY OM DATE 3/19/07
DRAWN BY STM DATE 3/19/07
REVIEWED BY JSF DATE 3/19/07
PROJECT NO. 07-012 REF.
SCALE

SHEET S4.1

PROJECT PARKER ROAD
NO. 07-012
TYPE