CENTURION ESTATES

WEST LINN, OREGON

GENERAL NOTES:

1. ALL WORK AND MATERIALS TO BE IN ACCORDANCE WITH THE CITY OF WEST LINN EXISTING STANDARDS, THE APWA (OREGON CHAPTER) STANDARD SPECIFICATION AND DRAWINGS (1990, WITH 1992 AND 1996 AMENDMENTS), THE STATE OF OREGON PLUMBING CODE, THE OREGON DEPARTMENT OF ENVIRONMENTAL QUALITY (DEQ), THE OREGON DEPARTMENT OF HUMAN RESOURCES, AND AS APPROVED AND NOTED ON THESE DRAWINGS.

2. CONTRACTOR TO OBTAIN ALL REQUIRED PERMITS AND LICENSES BEFORE STARTING CONSTRUCTION.

3. CONTRACTOR TO VERIFY ALL UTILITY LOCATIONS PRIOR TO CONSTRUCTION AND SHALL ARRANGE FOR THE RELOCATION OF ANY IN CONFLICT WITH THE PROPOSED CONSTRUCTION.

4. EXISTING UTILITY LOCATIONS SHOWN ARE APPROXIMATE ONLY AND MUST BE VERIFIED BY THE CONTRACTOR, ADDITIONAL UNDERGROUND UTILITIES MAY EXIST.

5. ANY DISCREPANCIES BETWEEN THE CONSTRUCTION DRAWINGS AND THE ACTUAL SITE CONDITIONS SHALL BE REPORTED TO THE ENGINEER AS SOON AS THEY BECOME APPARENT.

6. CONTRACTOR SHALL BE RESPONSIBLE FOR RESTORATION OF ALL DAMAGE OR DESTRUCTION OF PROPERTY MONUMENTATION OR CONSTRUCTION STAKES.

7. THE ENGINEER HAS NOT BEEN RETAINED OR COMPENSATED TO PROVIDE DESIGN AND CONSTRUCTION REVIEW SERVICES RELATING TO THE CONTRACTOR'S SAFETY PRECAUTIONS OR TO MEANS, METHODS, TECHNIQUES, SEQUENCES OR PROCEDURES REQUIRED FOR CONTRACTOR TO PERFORM HIS WORK.

8. ALL UTILITY TRENCHES WITHIN EXISTING OR PROPOSED RIGHT-OF-WAY SHALL BE BACKFILLED WITH 3/4"-0" GRANULAR BACKFILL WHICH IS COMPACTED TO 95% MAXIMUM DRY DENSITY PER AASHTO T-180.

9. CONTRACTOR SHALL PREPARE AND SUBMIT A TRAFFIC CONTROL PLAN AND RECEIVE APPROVAL PRIOR TO WORKING WITHIN THE PUBLIC RIGHT-OF-WAY.

10. THE DEVELOPER IS RESPONSIBLE FOR TWO YEARS OF MAINTENANCE OF THE DETENTION SYSTEM AFTER ACCEPTANCE OF THE CITY.

11. EROSION CONTROL MEASURES SHALL BE INSTALLED IN ACCORDANCE WITH CLACKAMAS COUNTY EROSION MANUAL.

STREET CONSTRUCTION AND PAVING:

1. ALL WORK AND MATERIALS SHALL CONFORM WITH EXISTING CITY OF WEST LINN STANDARDS

2. CONTRACTOR SHALL REMOVE AND DISPOSE OF TREES, STUMPS, ROOTS, BRUSH, AND OTHER ORGANIC MATERIAL IN THE WORK AREA AND WHERE INDICATED ON THE PLANS. THESE MATERIALS SHALL BE DISPOSED OF, OFF SITE, IN SUCH A MANNER AS TO MEET WITH LOCAL REGULATIONS.

3. CONTRACTOR SHALL PROVIDE THE NECESSARY EROSION PROTECTION, TO INCLUDE GRADING, DITCHING, HAY BALES, AND SILT FENCING TO MINIMIZE EROSION ONTO ADJACENT PROPERTIES.

4. THE STREET SECTION SHALL BE GRADED TO THE ELEVATIONS SHOWN ON THE DRAWINGS WITH THE NECESSARY ADJUSTMENTS TO ACCOMMODATE THE FINISHED PAVEMENT AS SPECIFIED.

5. MATERIAL IN SOFT SPOTS WITHIN THE PAVED AREAS SHALL BE REMOVED TO THE DEPTH REQUIRED TO PROVIDE A FIRM FOUNDATION AND SHALL BE REPLACED WITH PIT RUN CRUSHED ROCK. THE SUBGRADE SHALL BE "PROOF ROLLED", WITNESSED BY THE ENGINEER AND THE CITY PRIOR TO PLACEMENT OF BASE ROCK. ADDITIONALLY, COMPACTION TESTING FOR AT LEAST TWO LOCATIONS IS REQUIRED FOR THE FINISHED BASE ROCK. COMPACTION TO BE 95% OF MODIFIED PROCTOR DENSITY (T-180). TESTING WILL BE BY AN INDEPENDENT LABORATORY WITH RESULTS TO THE CITY AND DESIGN ENGINEER. FINISH BASE ROCK SHALL BE PROOF ROLLED, WITNESSED BY THE ENGINEER AND CITY PRIOR TO PLACEMENT OF ASPHALT.

6. CONTRACTOR TO NOTIFY CITY OF WEST LINN, AND THE ENGINEER, 24-HOURS PRIOR TO STARTING CONSTRUCTION OF WORK TO BE ACCEPTED BY THE CITY.

7. ASPHALT CONCRETE PAVEMENT TO BE FROM A MIX DESIGN APPROVED BY THE OREGON DEPARTMENT OF TRANSPORTATION. CONTRACTOR TO PROVIDE DENSITY TESTING RESULTS FOR ASPHALTIC CONCRETE PLACED IN PUBLIC STREETS.

8. PORTLAND CEMENT CONCRETE SHALL ATTAIN A MINIMUM COMPRESSIVE STRENGTH OF 3,300 PSI IN 28-DAYS.

STORM SEWER:

1. ALL WORK AND MATERIALS USED FOR PUBLIC IMPROVEMENTS TO CONFORM WITH THE REQUIREMENTS OF THE CITY OF WEST LINN.

2. ALL WORK & MATERIALS FOR PRIVATE STORM DRAINS TO MEET REQUIREMENTS OF THE STATE OF OREGON PLUMBING CODE.

3. MATERIALS:

- CONCRETE CULVERT PIPE (CCP) SHALL CONFORM TO THE REQUIREMENTS OF ASTM C-14, CLASS 3, NON-REINFORCED CONCRETE PIPE (10 INCHES OR GREATER)
- POLYVINYLCHLORIDE PIPE (PVC) SHALL CONFORM TO THE REQUIREMENTS OF ASTM D 3034 SDR 35 (10 INCHES OR LESS)
- HIGH DENSITY POLYETHYLENE PIPE (HDPE) SHALL HAVE A CORRUGATED EXTERIOR & SMOOTH INTERIOR WITH A MANNINGS N EQUAL TO OR BETTER THAN CONCRETE PIPE AND MEET REQUIREMENTS OF AASHTO M-294 (12-INCHES OR GREATER)
- DUCTILE IRON PIPE (DI) SHALL BE CLASS 150, CEMENT-MORTAR LINED PUSH-ON JOINT PIPE MEETING THE LATEST REVISIONS OF ANSI SPECIFICATIONS A 21.4/AWWA C-104.
- PIPE BEDDING AND TRENCH BACKFILL WITHIN PAVED AREAS TO BE 3/4"-0" CRUSHED ROCK. PIPE BEDDING TO EXTEND A MINIMUM OF 6-INCHES IN ALL DIRECTIONS FROM THE OUTSIDE OF THE PIPE.
- ALL MANHOLES OUTSIDE THE STREET RIGHT-OF-WAY SHALL HAVE TAMPER PROOF LIDS.
- ALL STORM LINES SHALL BE MANDREL TESTED AND T.V. ACCEPTANCE INSPECTION SHALL BE COMPLETED BY THE CONTRACTOR.
- ALL CONNECTIONS OF NEW STORM SYSTEMS TO THE EXISTING SHALL BE DONE ONLY AFTER COMPLETION OF TESTING AND ACCEPTANCE BY THE CITY.

SANITARY SEWER:

1. ALL WORK AND MATERIALS TO CONFORM WITH THE CITY OF WEST LINN STANDARDS (1990, APWA, OREGON CHAPTER, STANDARD SPECIFICATIONS AND DRAWINGS WITH 1992 AND 1996 AMENDMENTS), AND THE DEQ, FOR ALL PUBLIC SANITARY SEWER LINES.

2. ALL PRIVATE SERVICE CONNECTIONS SHALL BE A MINIMUM OF 4-INCH PVC AND INSTALLED AT A MINIMUM GRADE OF 2% UNLESS OTHERWISE NOTED.

3. CONTRACTOR TO "POT HOLE" EXISTING SEWER AT CONNECTION POINT PRIOR TO ACTUAL CONSTRUCTION TO VERIFY INVERT ELEVATION.

4. ALL PVC SANITARY SEWER PIPE SHALL CONFORM TO ASTM D-3034, SDR 35, UNLESS SHOWN OTHERWISE ON THE DRAWINGS. PVC SEWER PIPE SHALL BE INSTALLED IN ACCORDANCE WITH THE MANUFACTURE'S RECOMMENDED INSTALLATION PROCEDURES. PVC SEWER PIPE SHALL BE CONNECTED TO CONCRETE MANHOLES BY MEANS OF AN APPROVED COUPLING WITH AN ELASTOMERIC GASKET, AN APPROVED WATERSTOP OR FLEXIBLE SLEEVE. IN ADDITION TO HYDROSTATIC OR AIR TESTING, SANITARY SEWER CONSTRUCTED OF PVC SEWER PIPE SHALL BE DEFLECTION TESTED NO LESS THAN 30-DAYS AFTER THE TRENCH BACKFILL AND COMPACTION HAS BEEN COMPLETED. THE TEST SHALL BE CONDUCTED BY PULLING AN APPROVED SOLID POINTED MANDREL (95% OF INSIDE DIAMETER) THROUGH THE COMPLETED PIPE LINE.

5. CONTRACTOR SHALL CONDUCT A TV ACCEPTANCE INSPECTION UPON COMPLETION OF ALL SEWER CONSTRUCTION AND SUBMIT TO CITY.

6. PIPE BEDDING AND BACKFILL SHALL CONFORM TO THE APWA STANDARD DETAILS AND AS NOTED ON THE PLANS.

7. TRENCHES WITHIN THE ROADWAY OR DRIVEWAYS SHALL BE BACKFILLED WITH GRANULAR MATERIALS. COMPACTION SHALL BE SUFFICIENT TO PREVENT SETTLEMENT. CONTRACTOR TO DETERMINE TYPE OF EQUIPMENT, METHOD AND EFFORT REQUIRED TO ACHIEVE REQUIRED COMPACTION. SUBSEQUENT SETTLEMENT OF THE FINISH SURFACE WITHIN THE WARRANTY PERIOD SHALL BE CONSIDERED THE RESULT OF IMPROPER COMPACTION AND SHALL BE PROMPTLY REPAIRED BY THE CONTRACTOR AT NO EXPENSE TO THE OWNER.

8. ALL MANHOLES SHALL BE VACUUM TESTED AND ALL OUTSIDE THE STREET RIGHT-OF-WAY SHALL HAVE TAMPER PROOF LIDS.

9. CONTRACTOR SHALL MAINTAIN AS-CONSTRUCTED DATA INCLUDING STATION, LENGTH, AND DEPTH OF SERVICE CONNECTION, AND ANY CHANGES MADE DURING CONSTRUCTION. THAT DATA SHALL BE SUBMITTED TO THE ENGINEER UPON COMPLETION OF CONSTRUCTION.

10. ALL CONNECTIONS OF NEW SANITARY SYSTEMS TO THE EXISTING SHALL BE DONE ONLY AFTER COMPLETION OF TESTING AND ACCEPTANCE BY THE CITY.

WATER SYSTEM NOTES:

1. ALL WORK AND MATERIALS SHALL COMPLY WITH THE CITY OF WEST LINN STANDARDS AND SPECIFICATIONS, THE OREGON STATE HEALTH DIVISION ADMINISTRATIVE RULES CHAPTER 333 AND AWWA STANDARDS.

2. ALL PIPE TO HAVE A MINIMUM COVER OF 36-INCHES BELOW THE FUTURE FINISH GRADES.

3. DUCTILE IRON PIPE TO BE TYTON JOINT CEMENT MORTAR LINED, CLASS 52, AND SHALL CONFORM TO ASTM C-110, C-150, AND C-151.

4. GATE VALVES TO BE DOUBLE DISK TYPE CONFORMING TO AWWA C-500, WITH RESILIENT SEATS PER AWWA C-509-80. VALVE BOXES TO BE CAST IRON, RICH MODEL 925 OR EQUAL.

5. WATER SERVICES SHALL BE COPPER TUBING TYPE "K" 1-INCH DIAMETER FOR ALL SERVICES.

6. THRUST BLOCKING: ALL TEES, PLUGS, CAPS BENDS, AND AT ALL OTHER LOCATIONS WHERE UNBALANCED FORCE EXIST SHALL REQUIRE SUITABLE THRUST BLOCKING. CONCRETE TO BE POURED AGAINST UNDISTURBED EARTH AND SHALL HAVE A STRENGTH AT 28-DAYS OF 3000 PSI.

7. HYDROSTATIC TESTS: THE TEST PRESSURE SHALL BE 180 PSI AT THE HIGHEST POINT IN ANY SECTION. THE DURATION SHALL BE 60-MINUTES AND SHALL BE MONITORED BY THE ENGINEER AND THE CITY OF WEST LINN.

8. STERILIZATION: PIPELINES INTENDED TO CARRY POTABLE WATER SHALL BE FLUSHED AND STERILIZED BEFORE PLACING INTO SERVICE, STERILIZING PROCEDURE SHALL CONFORM TO AWWA C-651 OR AS MODIFIED OR EXPANDED BY GOVERNING AGENCY HAVING JURISDICTION.

9. DISPOSAL OF THE STERILIZATION WATER SHALL BE DONE IN CONFORMANCE WITH DEQ REGULATIONS IN SUCH A WAY AS TO NOT CAUSE DAMAGE OR INJURY.

10. FIRE HYDRANTS & BLOWOFFS SHALL BE INSTALLED AT THE LOCATION SHOWN ON THE PLANS CONFORMING TO CITY CONSTRUCTION STANDARDS AND DRAWINGS # FH-300 & BO-301. FIRE HYDRANTS SHALL BE A CLOW "MEDALLION" MODEL F-2545 OR MUELLER "CENTURION" MODEL A-423.

11. ALL CONECTIONS OF NEW WATER SYSTEMS TO THE EXISTING SHALL BE DONE ONLY AFTER COMPLETION OF TESTING AND ACCEPTANCE BY THE CITY.

CONDITIONS OF APPROVAL:

1. THE FINAL PLAT SHALL SHOW TREE EASEMENTS AROUND THE TREE CLUSTERS AS SHOWN ON THE APPLICANT'S PROPOSED SUBDIVISION MAP. THE PLAT SHALL ALSO SHOW TREE CONSERVATION EASEMENTS AROUND THE TWO TREE CLUSTERS IN THE CENTER OF THE SITE WHICH ARE DELINEATED ON THE TENTATIVE PLAN WITH "PROTECTION FENCING." THE EASEMENTS SHALL PRECLUDE ANY GRADING OR OTHER CONSTRUCTION ACTIVITY WITHIN THE EASEMENT AREA, BUT SHALL ALLOW FUTURE HOMEOWNERS TO LANDSCAPE THE AREAS UNDERNEATH THE TREES IN A MANNER WHICH DOES NOT POTENTIALLY HARM THE TREES. THE EASEMENT SHALL ALSO PRECLUDE ANY UTILITY CONSTRUCTION UNLESS THE APPLICANT PROVIDES A PLAN FOR APPROVAL BY THE CITY ARBORIST THAT IS DESIGNED TO PRESERVE TREES WITHIN THE EASEMENT FROM THE EFFECTS OF UTILITY CONSTRUCTION ACTIVITY.

2. REGARDING TREE PRESERVATION:

A. CHAIN LINK FENCING SHALL BE INSTALLED AT THE BOUNDARY OF ALL CONSERVATION EASEMENTS.

B. SNOW FENCING SHALL BE PLACED AT THE DRIP LINE EDGE OF ALL OTHER TREES ON THE SITE WHICH ARE NOT LABELED AS "TO BE REMOVED" (EXCEPT FOR ANY TREES BETWEEN LOTS 6 AND 7 WHICH MAY HAVE TO BE REMOVED IN ORDER TO ACCOMMODATE A STORM DETENTION FACILITY IF A FACILITY IS PLACED ABOVE-GROUND).

C. THE CITY ARBORIST SHALL INSPECT AND APPROVE ALL ON-SITE TREE PROTECTION MEASURES, AND TREE PRUNING, INCLUDING PLACEMENT OF PROTECTION FENCES PRIOR TO THE START OF SITE WORK. IT IS THE APPLICANT'S RESPONSIBILITY TO CONTACT THE CITY ARBORIST AND ARRANGE FOR THIS APPROVAL TO TAKE PLACE. NO PERMITS FROM ENGINEERING, PLANNING OR BUILDING DEPARTMENTS SHALL BE ISSUED WITHOUT APPROVAL FROM THE CITY ARBORIST REGARDING TREE PROTECTION MEASURES, AND REGARDING PROPOSED TREE PRUNING OF "TREES TO REMAIN" ON THE SITE.

D. ALL TREE PROTECTION MEASURES SHALL REMAIN IN PLACE AND FULLY FUNCTIONAL FOR THE ENTIRE TIME THAT SITE WORK AND CONSTRUCTION IS TAKING PLACE.

3. THE APPLICANT SHALL PROVIDE A 10-FOOT WIDE TRAIL EASEMENT AT THE SOUTHERN BOUNDARY OF PROPOSED LOT 1 BETWEEN GALLERY WAY AND THE WESTERN PROPERTY BOUNDARY. THE APPLICANT'S FINAL GRADING PLAN SHALL BE REVIEWED AND APPROVED BY THE WEST LINN PARKS AND RECREATION DIRECTOR SO AS TO PROVIDE FOR THE FUTURE PLACEMENT OF A PAVED TRAIL WITHIN THE EASEMENT AREA BY THE PARKS DEPARTMENT.

4. THE APPLICANT SHALL INSTALL HALF-STREET IMPROVEMENTS PLUS A TRAVEL LANE ALONG THE FRONTAGE OF THE PROPERTY ON SUNCREST AVENUE.

5. THE DETENTION METHOD AND FACILITY SHALL BE SUBJECT TO THE APPROVAL OF THE CITY ENGINEER.

6. THE WATER QUALITY TREATMENT METHOD AND FACILITY SHALL BE SUBJECT TO THE APPROVAL OF THE CITY ENGINEER.

7. THE SIDEWALK ALONG SUNCREST DRIVE SHALL BE SIX FEET WIDE, WITH A FIVE FOOT WIDE PLANTER STRIP BETWEEN THE SIDEWALK AND THE STREET.

8. ALL WATER METER LOCATIONS SHALL MEET CITY STANDARDS.

9. SPACING BETWEEN DRIVEWAYS ON SUNCREST DRIVE SHALL BE AT LEAST 75 FEET APART FROM EACH EDGE OF CURB.

10. ALL PUBLIC IMPROVEMENTS SHALL MEET EXISTING CITY OF WEST LINN CONSTRUCTION STANDARDS.

11. THE NAME OF THE SUBDIVISION SHALL BE CHANGED FROM GALLERY WAY TO A NAME APPROVED BY THE PLANNING DIRECTOR AND CLACKAMAS COUNTY SURVEYOR.

12. THE APPLICANT SHALL CONSTRUCT OR MAINTAIN EXISTING FENCING ON THE WESTERN BOUNDARY OF THE PROPERTY ADJACENT TO THE OREGON DEPARTMENT OF TRANSPORTATION PROPERTY.

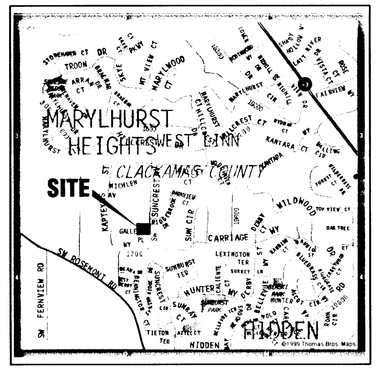

VICINITY MAP
SCALE: NTS

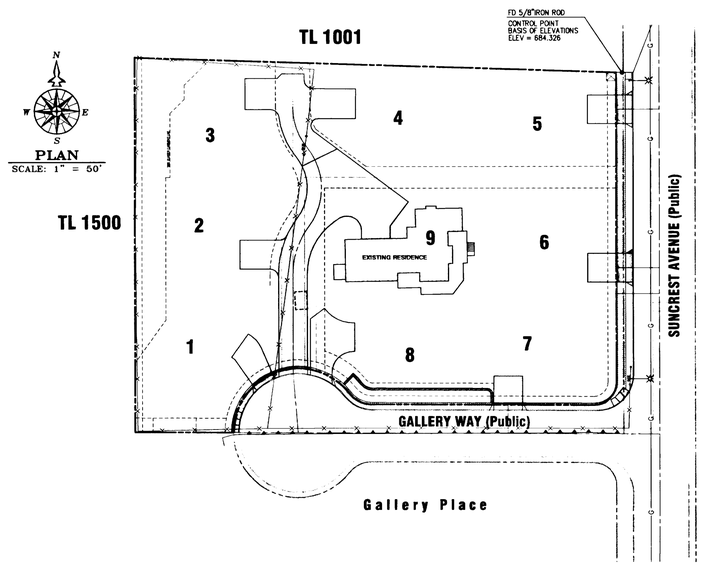

PLAN
SCALE: 1" = 50'

LEGEND

EXISTING TREE	CENTERLINE
EXISTING SANITARY MANHOLE	PROPERTY BOUNDARY
EXISTING STREET LIGHT	
EXISTING STREET SIGN	EDGE OF EXISTING GRAVEL
EXISTING TELEPHONE RISER	EDGE OF EXISTING PAVEMENT
EXISTING ELECTRICAL BOX	EXISTING CURB
EXISTING FIRE HYDRANT	NEW CURB
EXISTING CATCH BASIN	NEW STORM MAIN
EXISTING UTILITY POLE	NEW SANITARY
NEW WATER VALVE	NEW WATER
NEW SANITARY MANHOLE	SEDIMENT FENCE
NEW STORM MANHOLE	NEW PAVEMENT
NEW CATCH BASIN	NEW SIDEWALK
NEW WATER METER	NEW DRIVEWAY BY HOMEBUILDER
NEW FIRE HYDRANT	

SHEET INDEX

1 COVER
2 SITE PLAN
3 STREET PROFILES
4 STORM DRAINAGE PLAN
5 STORM DRAINAGE PROFILES
6 SANITARY SEWER AND WATER PLAN
7 SANITARY PROFILES
8 GRADING AND EROSION CONTROL PLAN
9 TREE REMOVAL PLAN

AS-BUILT
DATE: JULY. 8, 2002

REGISTERED PROFESSIONAL ENGINEER 7120 OREGON JULY 16, 1971 BRUCE D. GOLDSON

EXPIRES: 6/30/2003
SIGNATURE DATE: 01/29/02

CITY FILE NO.: SUB-01-01

COVER

DATE	NO.	REVISION
AS-BUILT	4	7/8/02
01/29/02	3	ADD RETAINING WALL, CHANGE DRIVEWAYS
11/30/01	2	REVISED PER CITY
11/12/01	1	REVISED PER CITY LETTER AND MEETING

DRAWN BJS | DESIGNED BDG | CHECKED BDG
SCALE 1" = 50" | DATE APR, 2001
PLAN 00-4541.1-2473 | 45411Civil

COMPASS ENGINEERING
ENGINEERING ★ SURVEYING ★ PLANNING
6564 S.E. LAKE ROAD
MILWAUKIE, OREGON 97222
compass@northwest.com
(503) 653-9093 PHONE
(503) 653-9095 FAX

CENTURION HOMES
2137 MARYLWOOD CT.
WEST LINN, OR
503-656-8411

CENTURION ESTATES
TAX LOT 1100 - 2-1E-23BC
WEST LINN, OREGON

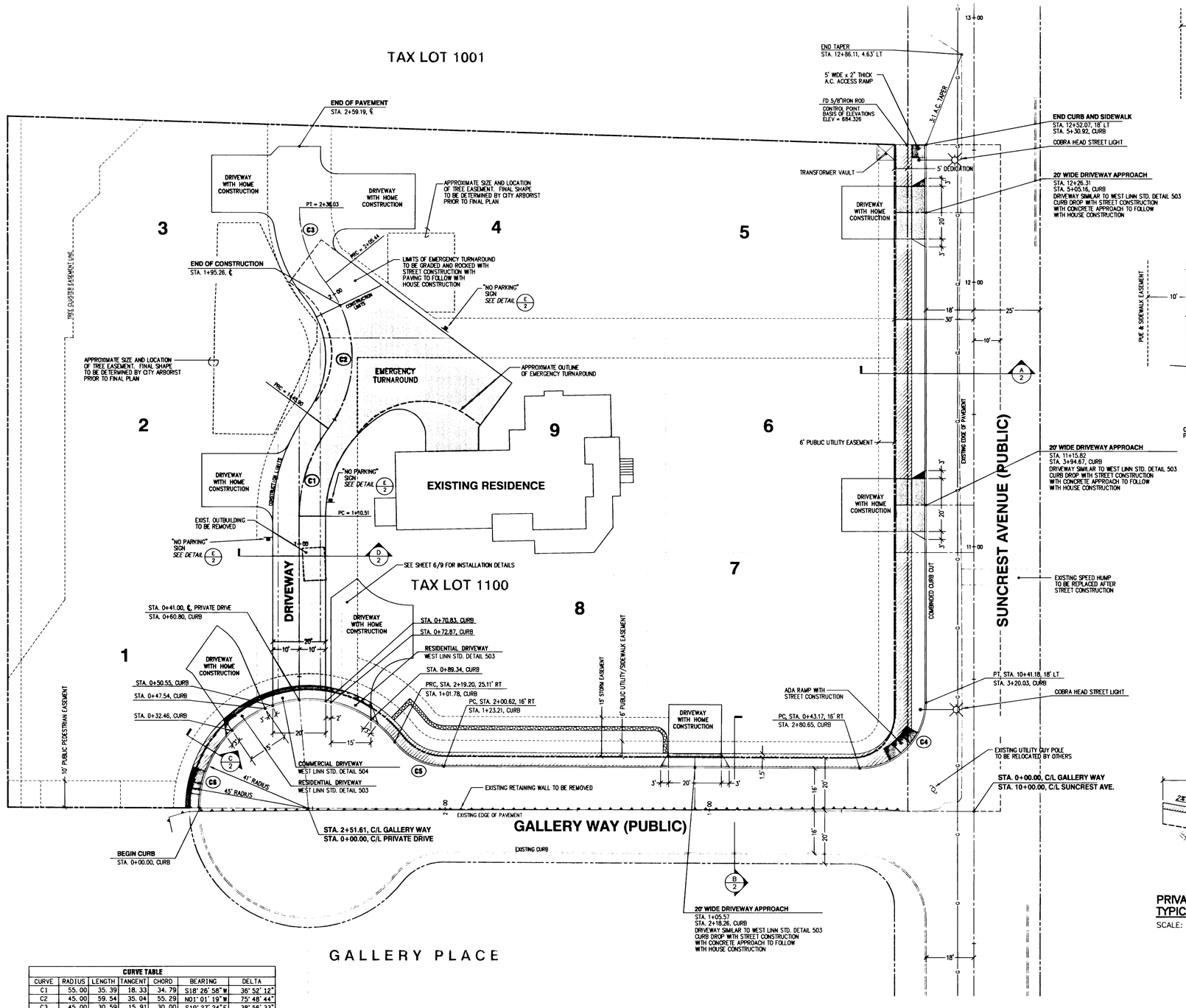

PLAN
SCALE: 1" = 20'

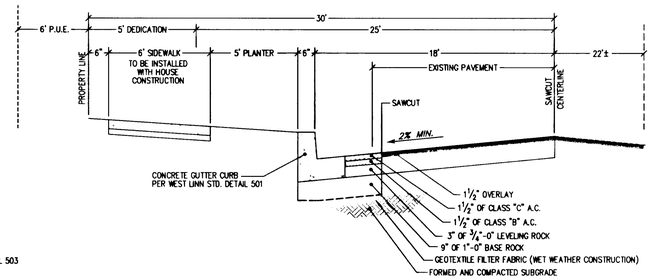

SUNCREST AVENUE TYPICAL SECTION — A/2
SCALE: NTS

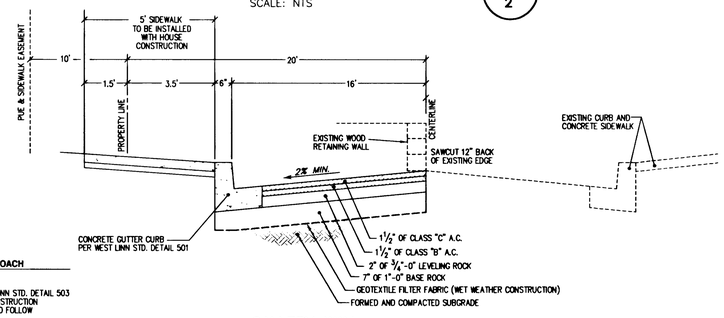

GALLERY WAY TYPICAL SECTION — B/2
SCALE: NTS

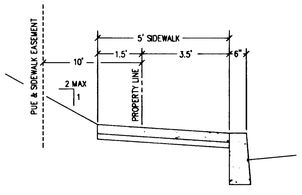

LOT 1 TYPICAL SECTION — C/2
SCALE: NTS

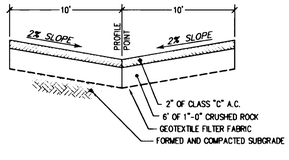

PRIVATE DRIVEWAY TYPICAL SECTION — D/2
SCALE: NTS

NO PARKING SIGN — E/2
SCALE: NTS

CURVE TABLE						
CURVE	RADIUS	LENGTH	TANGENT	CHORD	BEARING	DELTA
C1	55.00	35.39	18.33	34.79	S18°26'58"W	36°52'12"
C2	45.00	59.54	35.04	55.29	N01°01'19"W	75°48'44"
C3	45.00	30.59	15.91	30.00	S19°27'24"E	38°56'33"
C4	25.00	39.37	25.10	35.43	N45°08'00"E	90°14'16"
C5	23.50	21.42	11.52	20.69	S63°37'46"E	52°14'12"
C6	41.00	101.78	119.88	77.59	S71°22'14"W	142°14'12"

AS-BUILT
DATE: JULY. 08, 2002

REGISTERED PROFESSIONAL ENGINEER 7129 OREGON JULY 16, 1971 BRUCE D. GOLDSON
EXPIRES: 6/30/2003
SIGNATURE DATE: 01/29/02

STREET PLAN

DATE	NO.	REVISION
07/08/02	5	AS-BUILT
01/29/02	4	ADD WALL AND NOTES, CHANGE DRIVEWAYS
12/18/01	3	ADD "NO PARKING" DETAILS
11/30/01	2	REVISED PER CITY
11/14/01	1	REVISED PER CITY LETTER AND MEETING

DRAWN BJS | DESIGNED BDG | CHECKED BDG
SCALE 1" = 20" | DATE APR. 2001
PLAN 00-4541.1-2473 | 45411Civil

COMPASS ENGINEERING
ENGINEERING ★ SURVEYING ★ PLANNING
6564 S.E. LAKE ROAD
MILWAUKIE, OREGON 97222
compass@northwest.com
(503) 653-9093 PHONE
(503) 653-9095 FAX

CENTURION HOMES
2137 MARYLWOOD CT.
WEST LINN, OR
503-656-8411

CENTURION ESTATES
TAX LOT 1100 - 2-1E-23BC
WEST LINN, OREGON

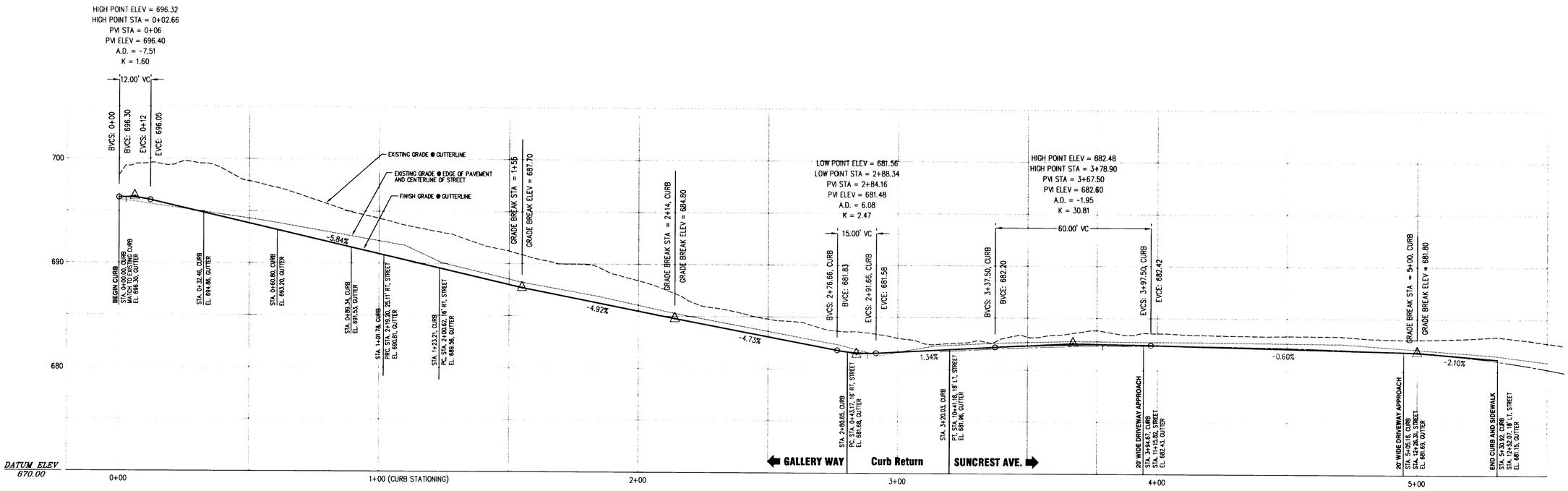

GUTTERLINE PROFILE

SCALE: 1" = 20' HORIZONTAL
1" = 5' VERTICAL

1/2

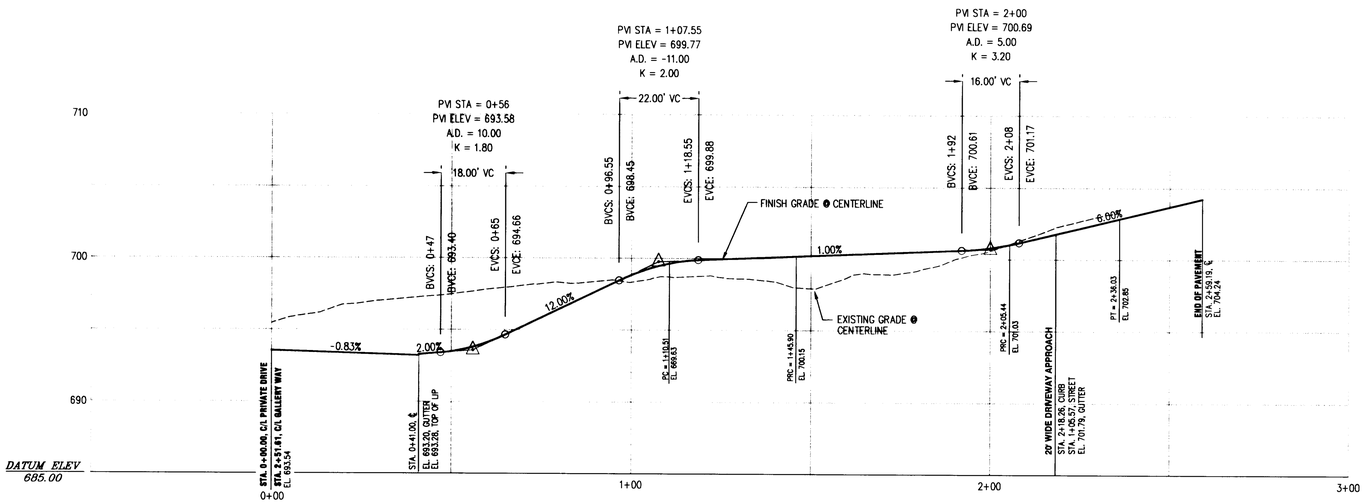

PRIVATE DRIVE CENTERLINE PROFILE

SCALE: 1" = 20' HORIZONTAL
1" = 5' VERTICAL

3/2

REGISTERED PROFESSIONAL ENGINEER 7126 OREGON JULY 16, 1971 BRUCE D. GOLDSON

EXPIRES: 6/30/2003
SIGNATURE DATE: 01/29/02

AS-BUILT
DATE: JULY. 08, 2002

DATE	NO.	REVISION
07/08/02	4	AS-BUILT
01/29/02	3	CHANGE DRIVEWAYS
11/30/01	2	REVISED PER CITY
11/12/01	1	REVISED PER CITY LETTER AND MEETING

DRAWN BJS | DESIGNED BDG | CHECKED BDG
SCALE 1" = 20" | DATE NOV, 2000
PLAN 00-4541.1-2473 | 45411Civil

COMPASS ENGINEERING
ENGINEERING ★ SURVEYING ★ PLANNING
6564 S.E. LAKE ROAD
MILWAUKIE, OREGON 97222
compass@northwest.com
(503) 653-9093 PHONE
(503) 653-9095 FAX

CENTURION HOMES
ADDRESS
CITY/STATE
TELEPHONE

CENTURION ESTATES
TAX LOT 1100 - 2-1E-23BC
WEST LINN, OREGON

STREET PROFILES

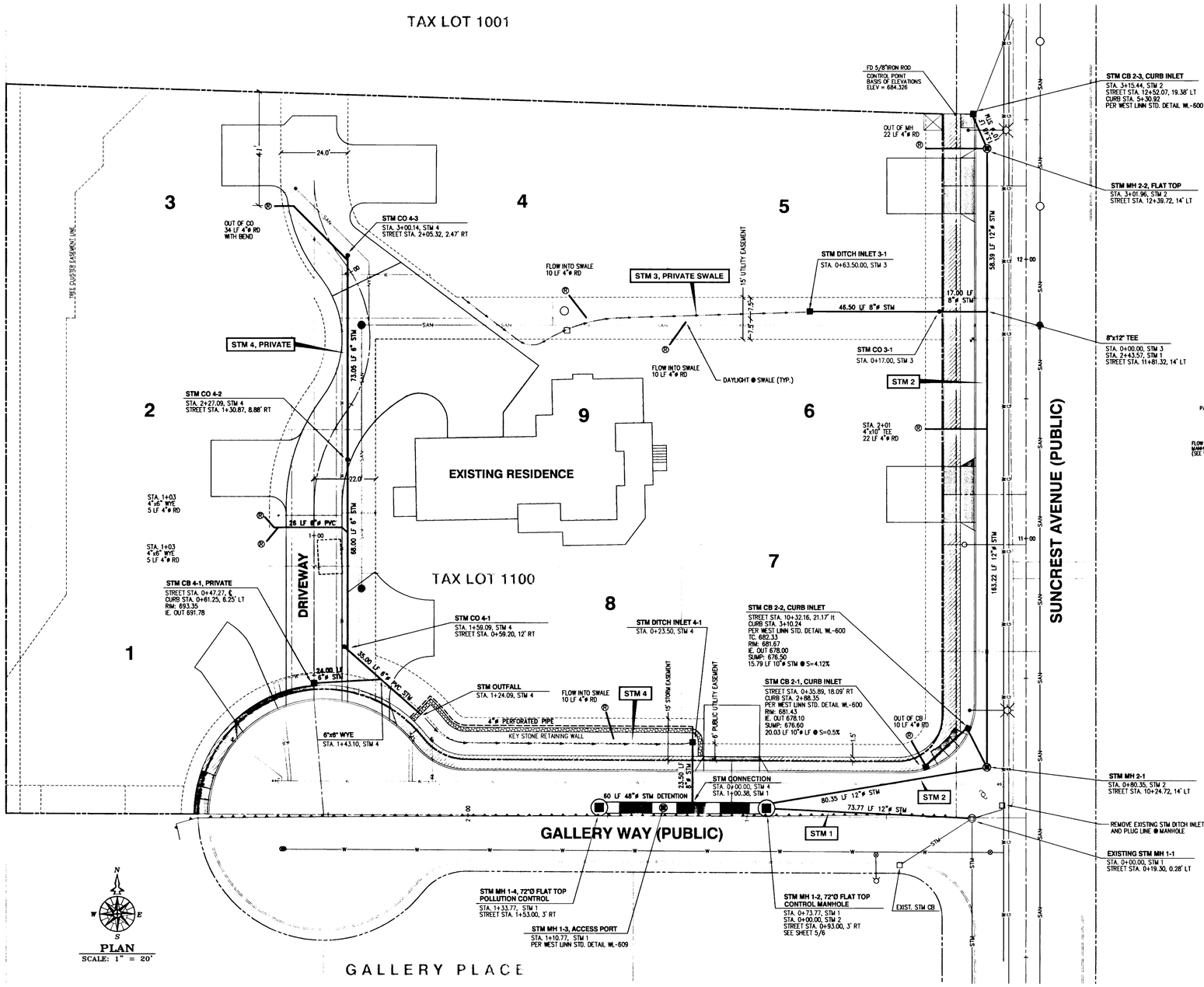

PLAN
SCALE: 1" = 20'

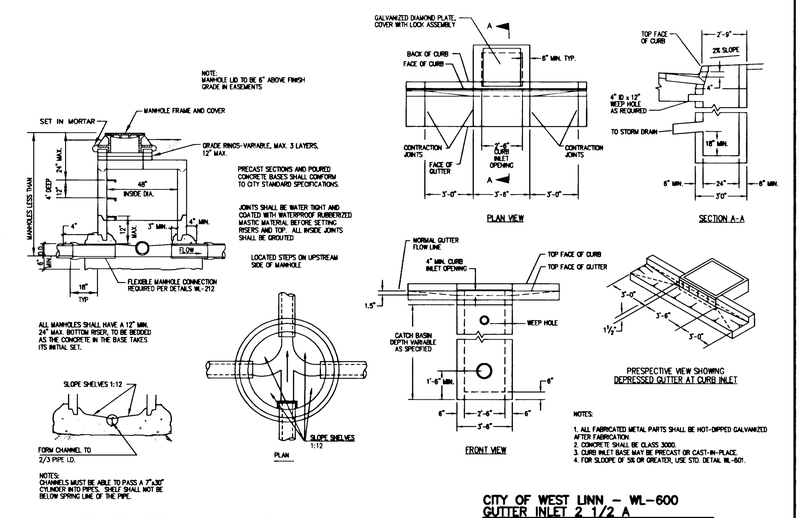

CITY OF WEST LINN – WL-208
SHALLOW MANHOLE FOR LESS THAN 36" PIPE
SCALE: NTS

CITY OF WEST LINN – WL-600
GUTTER INLET 2 1/2 A
SCALE: NTS

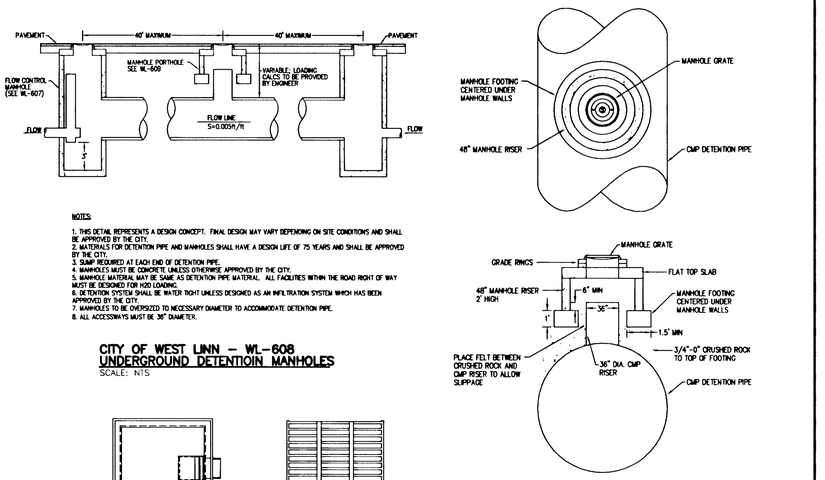

CITY OF WEST LINN – WL-608
UNDERGROUND DETENTIOIN MANHOLES
SCALE: NTS

CITY OF WEST LINN – WL-609
MANHOLE PORTHOLE
SCALE: NTS

PRIVATE CATCH BASIN
SCALE: NTS
CB-2

REGISTERED PROFESSIONAL ENGINEER
7120
OREGON
July 16, 1971
BRUCE D. GOLDSON
EXPIRES: 6/30/2003
SIGNATURE DATE: 01/29/02

AS-BUILT
DATE: JULY. 08, 2002

STORM DRAINAGE PLAN

DATE	NO.	REVISION
07/08/02	5	AS-BUILT
01/29/02	4	ADD SWALE PER OWNER AND CITY
01/17/02	3	REVISED STORM PER CITY
11/30/01	2	REVISED PER CITY
11/14/01	1	REVISED PER CITY LETTER AND MEETING

DRAWN BJS | DESIGNED JBS | CHECKED BDG
SCALE 1" = 20" | DATE APR. 2001
PLAN 00-4541.1-2473 | 45411Civil

COMPASS ENGINEERING
ENGINEERING ★ SURVEYING ★ PLANNING
6564 S.E. LAKE ROAD
MILWAUKIE, OREGON 97222
compass@northwest.com
(503) 653-9093 PHONE
(503) 653-9095 FAX

CENTURION HOMES
2137 MARYLWOOD CT.
WEST LINN, OR
503-656-8411

CENTURION ESTATES
TAX LOT 1100 - 2-1E-23BC
WEST LINN, OREGON

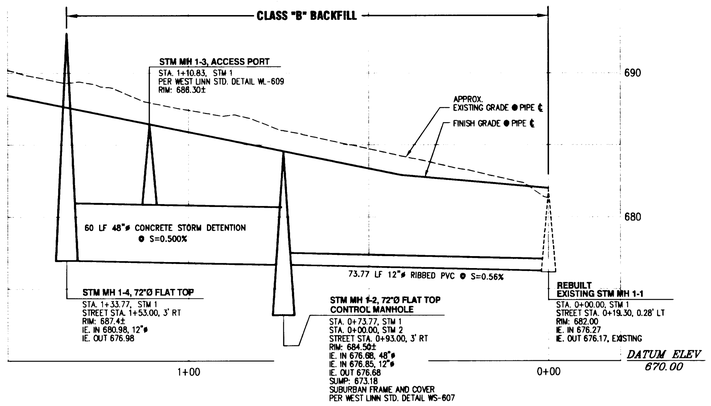

STM 1 – PUBLIC
STORM DRAINAGE PROFILE (1/5)
SCALE: 1" = 20' HORIZONTAL
1" = 5' VERTICAL

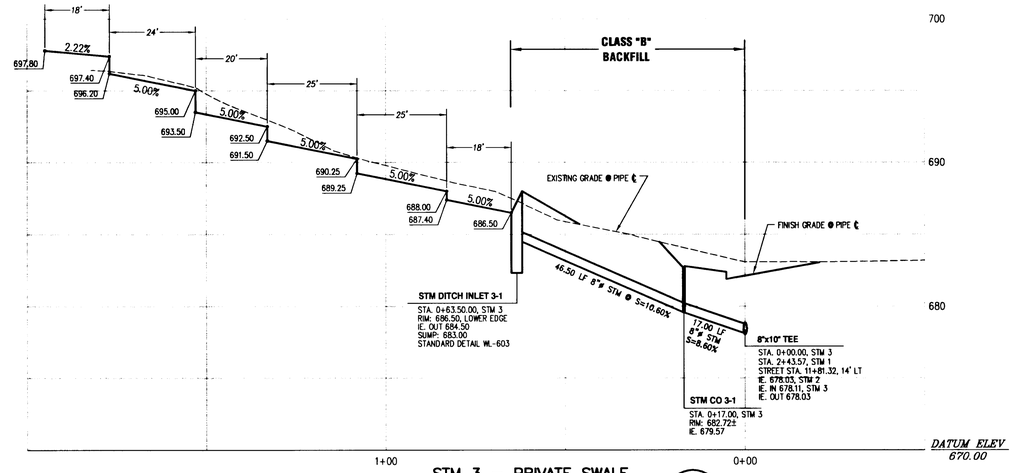

STM 3 – PRIVATE SWALE
STORM DRAINAGE PROFILE (3/5)
SCALE: 1" = 20' HORIZONTAL
1" = 5' VERTICAL

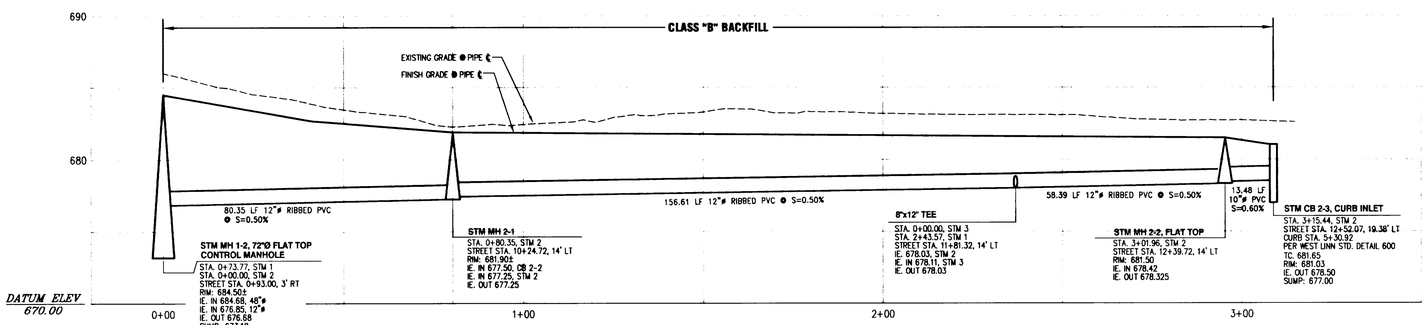

STM 2 – PUBLIC
STORM DRAINAGE PROFILE (2/5)
SCALE: 1" = 20' HORIZONTAL
1" = 5' VERTICAL

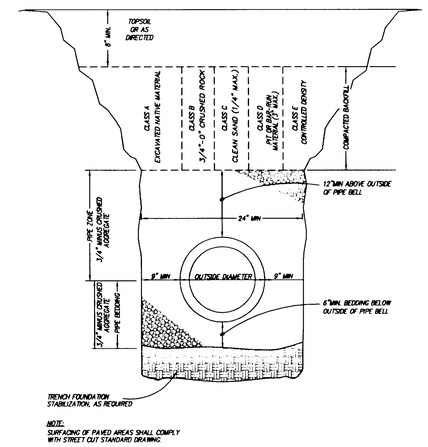

CITY OF WEST LINN – WL-200
SCALE: NTS

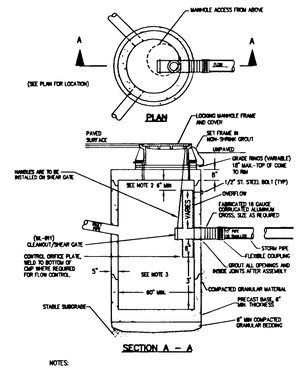

NOTES:

1. ALL PRECAST SECTIONS SHALL CONFORM TO THE REQUIREMENTS OF ASTM C-478.

2. DISTANCE FROM TOP OF OVERFLOW TO MH RIM SHALL BE BASED ON OVERFLOW CAPACITY CALC'S BY DESIGN ENGINEER. ASSUME ORIFICE CONTROL.

3. 72" MINIMUM DIA. MANHOLE REQUIRED FOR OUTLET OR INLET > 21". 4. NO STEPS REQUIRED.

CITY OF WEST LINN – WL-607
POLLUTION/FLOW CONTROL MANHOLE
SCALE: NTS

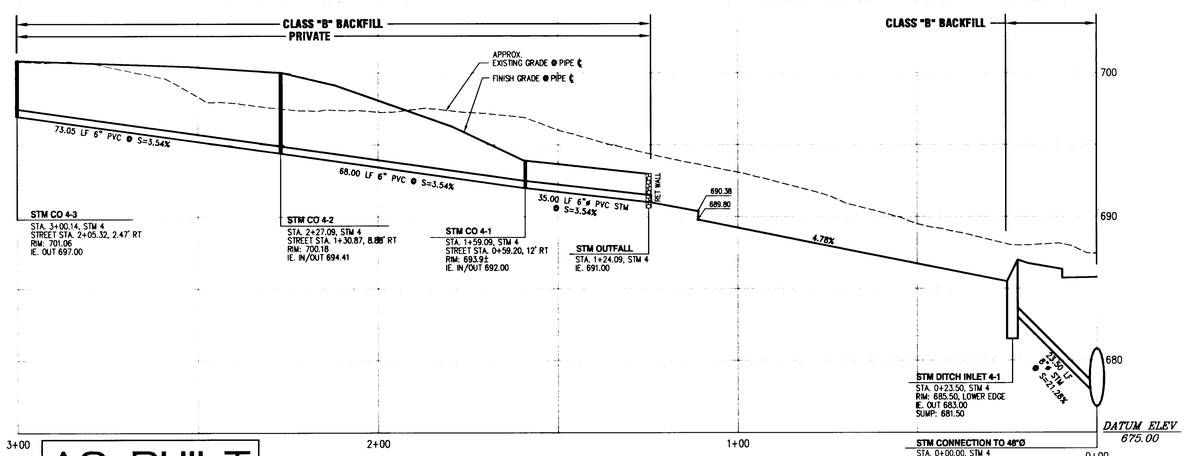

AS-BUILT
DATE: JULY. 08, 2002

STM 4 – PRIVATE
STORM DRAINAGE PROFILE (4/5)
SCALE: 1" = 20' HORIZONTAL
1" = 5' VERTICAL

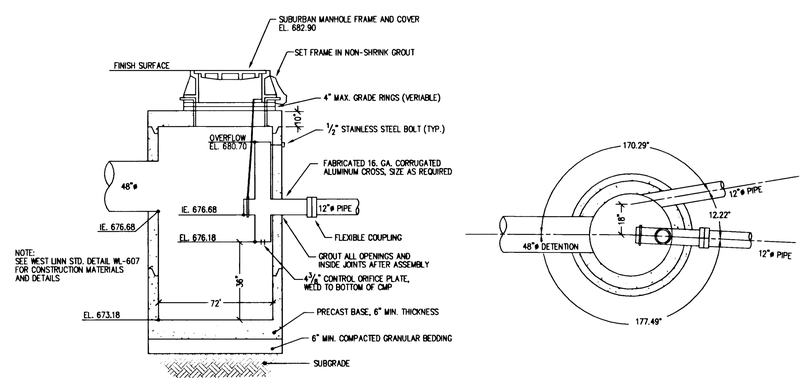

NOTE:
SEE WEST LINN STD. DETAIL WL-607 FOR CONSTRUCTION MATERIALS AND DETAILS

CONTROL MANHOLE
SCALE: NTS

EXPIRES: 6/30/2003
SIGNATURE DATE: 01/29/02

STORM DRAINAGE PROFILES

DATE	NO.	REVISION
07/08/02	6	AS-BUILT
01/29/02	5	ADD SWALE PER OWNER AND CITY
01/17/02	4	REVISED STORM PER CITY
11/30/01	3	ADD ADDITIONAL CITY REQUESTED REVISIONS
11/30/01	2	REVISED PER CITY
11/13/01	1	REVISED PER CITY LETTER AND MEETING

DRAWN BJS	DESIGNED JBS	CHECKED BDG
SCALE 1" = 20"	DATE APR, 2001	
PLAN 00-4541.1-2473	45411Civil	

COMPASS ENGINEERING
ENGINEERING ★ SURVEYING ★ PLANNING
6564 S.E. LAKE ROAD
MILWAUKIE, OREGON 97222
compass@northwest.com
(503) 653-9093 PHONE
(503) 653-9095 FAX

CENTURION HOMES
2137 MARYLWOOD CT.
WEST LINN, OR
503-656-8411

CENTURION ESTATES
TAX LOT 1100 - 2-1E-23BC
WEST LINN, OREGON

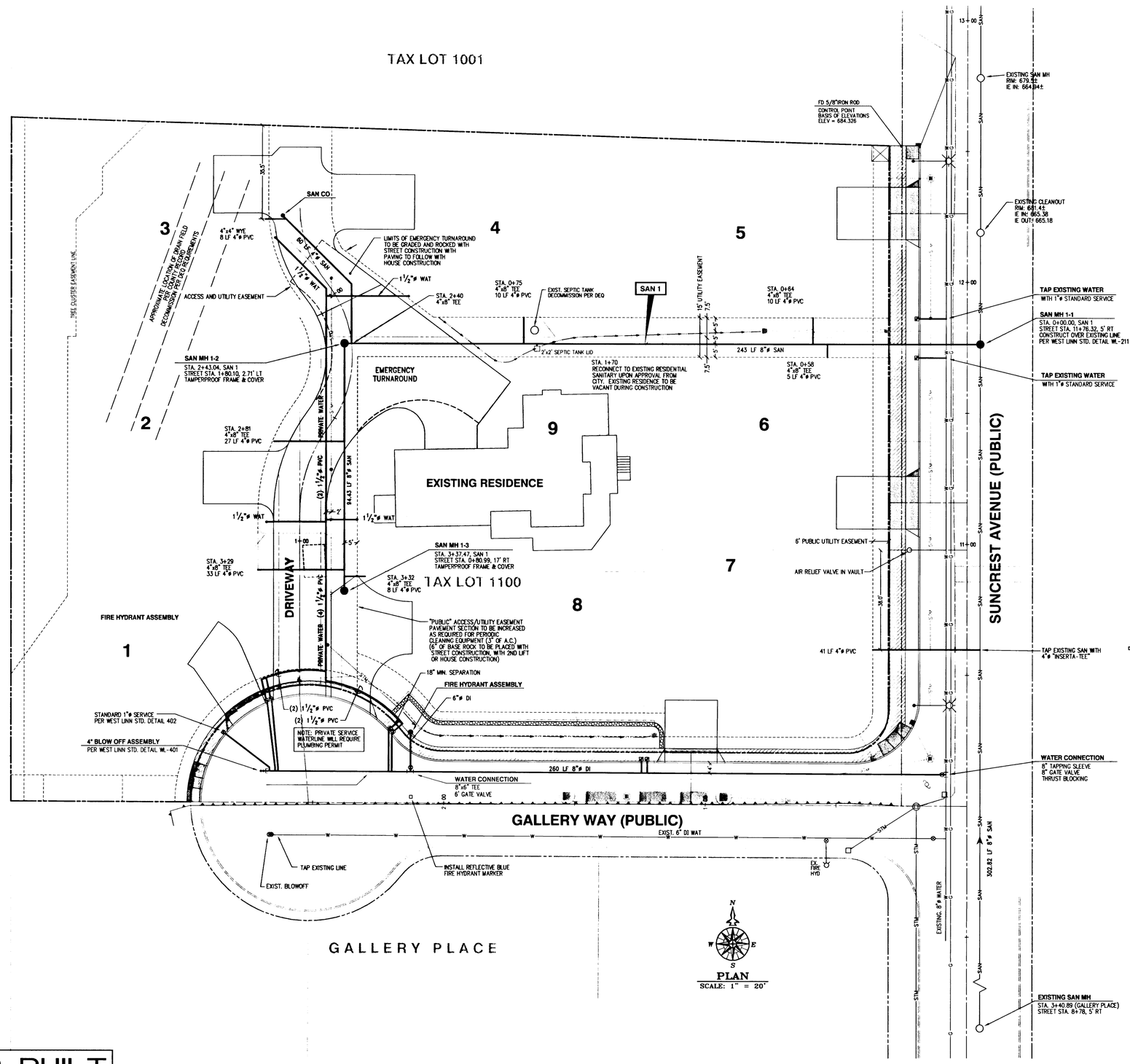

PLAN
SCALE: 1" = 20'

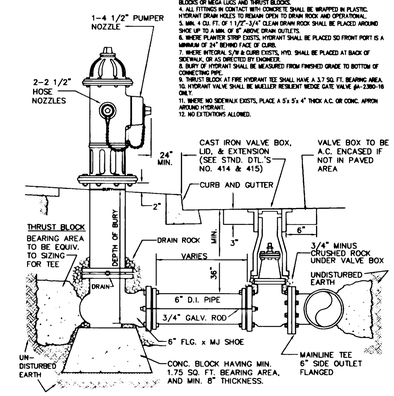

NOTES:

1. HYDRANTS TO BE MUELLER CENTURION MDL A-423 ONLY WITH 1 1/2" OPER. NUTS. OR CLOW MEDALION F-2545.
2. HYDRANT COLOR TO BE MILLER EQUIP. ENAMEL O E 40 (SAFETY YELLOW).
3. JOINTS TO BE RESTRAINED BY 3/4" DIA. GALVANIZED STEEL RODS AND THRUST BLOCKS OR MEGA LUGS AND THRUST BLOCKS.
4. ALL FITTINGS IN CONTACT WITH CONCRETE SHALL BE WRAPPED IN PLASTIC. HYDRANT DRAIN HOLES TO REMAIN OPEN TO DRAIN ROCK AND OPERATIONAL.
5. MIN. 4 CU. FT. OF 1 1/2"-3/4" CLEAN DRAIN ROCK SHALL BE PLACED AROUND SHOE UP TO A MIN. OF 6" ABOVE DRAIN OUTLETS.
6. WHERE PLANTER STRIP EXISTS, HYDRANT SHALL BE PLACED SO FRONT PORT IS A MINIMUM OF 24" BEHIND FACE OF CURB.
7. WHERE INTEGRAL S/W & CURB EXISTS, HYD. SHALL BE PLACED AT BACK OF SIDEWALK, OR AS DIRECTED BY ENGINEER.
8. BURY OF HYDRANT SHALL BE MEASURED FROM FINISHED GRADE TO BOTTOM OF CONNECTING PIPE.
9. THRUST BLOCK AT FIRE HYDRANT TEE SHALL HAVE A 3.7 SQ. FT. BEARING AREA.
10. HYDRANT VALVE SHALL BE MUELLER RESILIENT WEDGE GATE VALVE #A-2360-16 ONLY.
11. WHERE NO SIDEWALK EXISTS, PLACE A 5'x 5'x 4" THICK A.C. OR CONC. APRON AROUND HYDRANT.
12. NO EXTENTIONS ALLOWED.

CITY OF WEST LINN – WL-401
STANDARD FIRE HYDRANT ASSEMBLY
SCALE: NTS

FITTING SIZE (inches)	TEE, WYE, & ① HYDRANTS	STRADDLE BLOCK ②	90° BEND ① PLUGGED CROSS TEE PLUGGED-RUNS	45° BEND ①	22 1/2° BEND ①	11 1/2° BEND ①
2	*	*	*	*	*	*
4	1.7	2.1	2.4	1.3	*	*
6	3.7	4.9	5.5	2.9	1.5	*
8	6.7	8.7	9.5	5.1	2.7	1.3
10	10.5	13.6	14.8	8	4.1	2
12	15.1	19.6	21.3	11.6	5.9	2.9
14	*	*	*	*	*	*
16	26.8	34.8	37.9	20.5	10.4	5.2
18	33.9	44	47.9	25.9	12.8	6.7
LARGER	* *	* *	* *	* *	* *	* *
BEARING AREA OF THRUST BLOCKS (sq. ft.)						

1. ALL VALUES ARE BASED ON THE FOLLOWING ASSUMPTIONS: AVG. PRESSURE = 100 PSI x 2 (safety factor); 1500 PSF SOIL BEARING CAPACITY; NORMAL DISTRIBUTION DESIGN VELOCITY NOT TO EXCEED 5 F/S.
2. ALL FITTINGS SHALL BE WRAPPED IN PLASTIC PRIOR TO PLACEMENT OF CONCRETE.
3. BEARING SURFACE OF THRUST BLOCKING SHALL BE AGAINST UNDISTURBED SOIL.
4. ALL CONCRETE MIX SHALL HAVE A MIN. 28 DAY STRENGTH OF 3000 PSI.
5. ALL PIPE ZONES SHALL BE GRAVEL FILLED AND COMPACTED.
6. THRUST BLOCKS FOR PLUGGED CROSS AND PLUGGED TEE SHALL HAVE #4 REBAR LIFTING LOOPS INSTALLED AS SHOWN.
7. VERTICAL THRUST DETAILS–SEE DWG. #409.
8. STRADDLE BLOCK DETAILS–SEE DWG. #410.

* BLOCK TO UNDISTURBED TRENCH WALLS

* * THRUST BLOCKS FOR PIPES LARGER THAN 18" WILL BE INDIVIDUALLY DESIGNED BY THE ENGINEER.

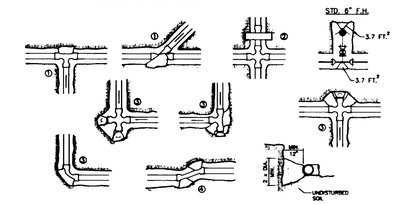

CITY OF WEST LINN – WL-406
HORIZONTAL THRUST BLOCKING
SCALE: NTS

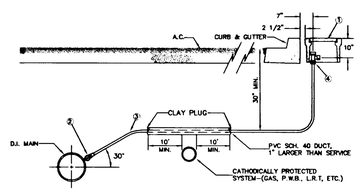

MATERIALS:

1. BROOKS METER BOX, BODY NO. 37, LID AND COVER NO. 37-S.
2. MUELLER CORP. STOP NO. H-15000, H-15008, OR FORD F600. SET CORP. STOP WITH OPERATING NUT AT 3 OR 9 O'CLOCK.
3. 1" SOFT TEMPER, TYPE "K" COPPER TUBING COMPLYING WITH ASTM B-88.
4. MUELLER ANGLE METER STOP NO. H-14258 (FORD NO. KV43-444W-Q).

NOTES:

1. SUBSTITUTES FOR ANY MATERIALS SHOWN SHALL BE APPROVED BY THE CITY ENGINEER.
2. ALL PIPE AND STRUCTURE ZONES SHALL BE BACKFILLED USING 3/4" MINUS CRUSHED AGG. AND COMPACTED TO 95% MAX. DENSITY AS DETERMINED BY AASHTO T-180.
3. WHEN AN ACTIVE CATHODIC PROTECTED SYSTEM IS ENCOUNTERED, SCH. 40 PVC SHALL BE INSTALLED AS SHOWN ABOVE WITH CLAY PLUG.
4. METER BOX SHALL BE CENTERED OVER THE COMPLETED METER ASSEMBLY.
5. FOR VACANT RESIDENTIAL LOTS, LOCATE SINGLE SERVICE 18" INSIDE SIDE LOT LINE.
6. TAPS INTO MAIN TO BE AT 18" CENTERLINE MIN.
7. ANGLE METER STOPS TO BE 18" FROM PROPERTY LINE AND NOT IN DRIVEWAY APPROACH.

CITY OF WEST LINN – WL-402
STANDARD 1" WATER SERVICE
SCALE: NTS

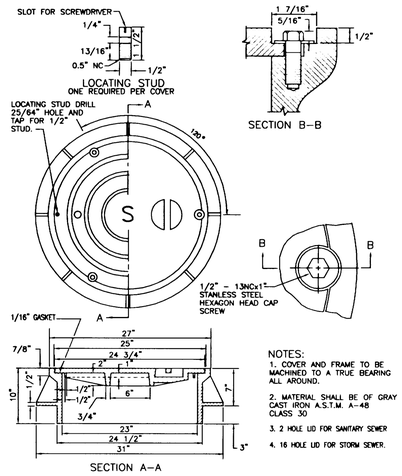

NOTES:

1. COVER AND FRAME TO BE MACHINED TO A TRUE BEARING ALL AROUND.
2. MATERIAL SHALL BE OF GRAY CAST IRON A.S.T.M. A-48 CLASS 30
3. 2 HOLE LID FOR SANITARY SEWER
4. 16 HOLE LID FOR STORM SEWER.

CITY OF WEST LINN – WL-214
WATERPROOF AND TAMPERPROOF MANHOLE FRAME AND COVER
SCALE: NTS

REGISTERED PROFESSIONAL ENGINEER 7120 OREGON JULY 16, 1971 BRUCE D. GOLDSON

EXPIRES: 6/30/2003
SIGNATURE DATE: 01/29/02

AS-BUILT
DATE: JULY. 08, 2002

SANITARY SEWER AND WATER PLAN

DATE	NO.	REVISION
07/08/02	5	AS-BUILT
01/29/02	4	ADD PAVING NOTES
01/17/02	3	REVISED STORM PER CITY
11/30/01	2	REVISED PER CITY
11/13/01	1	REVISED PER CITY LETTER AND MEETING

DRAWN BJS | DESIGNED JBS | CHECKED BDG
SCALE 1" = 20" | DATE APR. 2001
PLAN 00-4541.1-2473 | 45411Civil

COMPASS ENGINEERING
ENGINEERING ★ SURVEYING ★ PLANNING
6564 S.E. LAKE ROAD
MILWAUKIE, OREGON 97222
compass@northwest.com
(503) 653-9093 PHONE
(503) 653-9095 FAX

CENTURION HOMES
2137 MARYLWOOD CT.
WEST LINN, OR
503-656-8411

CENTURION ESTATES
TAX LOT 1100 - 2-1E-23BC
WEST LINN, OREGON

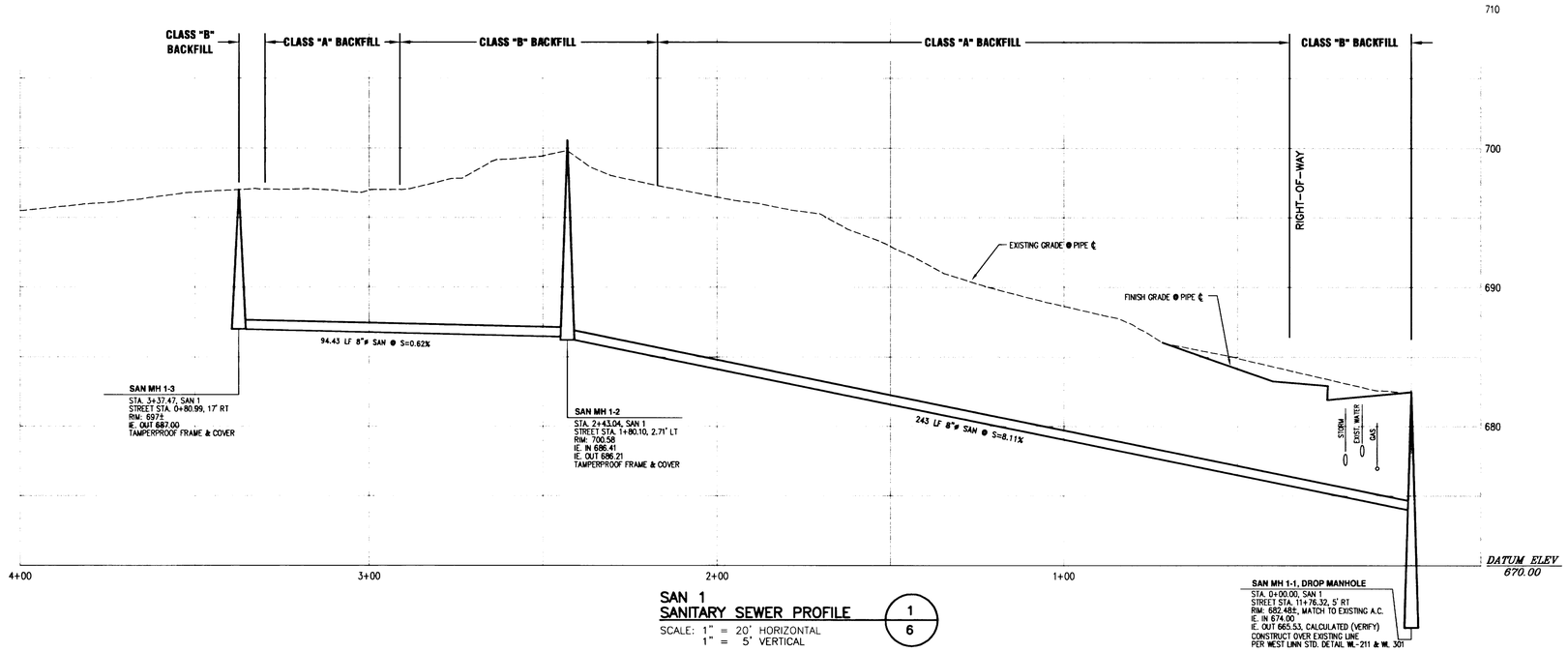

SAN 1
SANITARY SEWER PROFILE

1 / 6

SCALE: 1" = 20' HORIZONTAL
1" = 5' VERTICAL

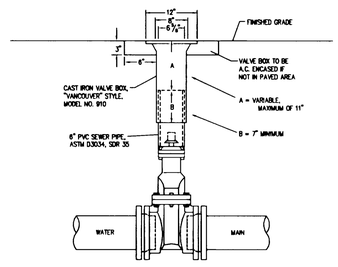

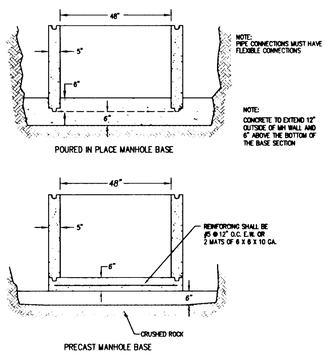

CITY OF WEST LINN – WL-211
MANHOLE BASE
SCALE: NTS

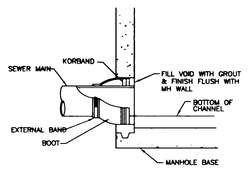

FLEXIBLE MANHOLE CONNECTION
(KOR-N-SEAL OR EQUAL)

CITY OF WEST LINN – WL-212
FLEXIBLE MANHOLE CONNECTION
SCALE: NTS

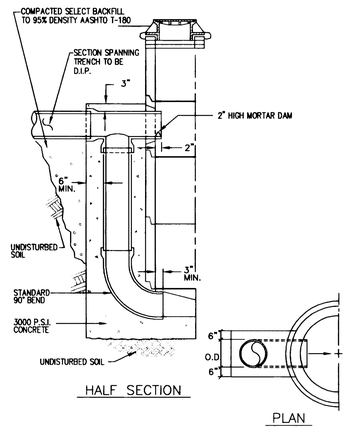

CITY OF WEST LINN – WL-301
OUTSIDE DROP MANHOLE
SCALE: NTS

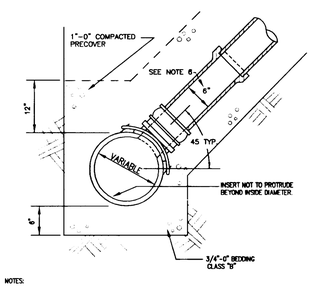

NOTES:

1. A MINIMUM OF 24 HOURS NOTICE IS REQUIRED PRIOR TO A TAP INSPECTION. ALL TRENCHES SHALL BE SHORED IN COMPLIANCE WITH OR-OSHA EXCAVATION RULES. CHAPTER 437, DIVISION "3", SUBDIVISION "P", ADOPTED SEPTEMBER 1, 1990. PUBLIC WORKS INSPECTORS WILL NOT INSPECT A TOP IN A TRENCH WITHOUT LEGAL SHORING.

THE TAP SHALL BE INSPECTED BEFORE BACKFILL IS ALLOWED AND BEFORE THE SIDE SEWER CONNECTION IS MADE. THE CORE DRILLED "SLUG" IS TO BE SHOWN TO THE INSPECTOR TO INSURE IT WAS REMOVED FROM THE SEWER LINE.

2. ALL SERVICE LINE CONNECTIONS SHALL BE MADE WITH APPROVED CONNECTOR MANUFACTURED AND DESIGNED TO CONNECT TO A CORE DRILLED PIPE, FOWLER INSERT-A-TEE, SEAL TIGHT SADDLE, TAP TITE TEE, OR APPROVED EQUAL COMMERCIAL TAP.

3. THE CENTERLINE OF TAP IS TO BE ABOVE THE SPRINGLINE.

4. 4" MAXIMUM TAP FOR 8" MAIN (CUT-IN TEE TO BE USED FOR 6" HOUSE BRANCH ON 8" MAIN.)

6. 4" HOUSE BRANCH MAY BE USED FOR SINGLE FAMILY LOTS ONLY.

CITY OF WEST LINN – WL-303
SEWER SERVICE TAP TO EXISTING SEWERS FOR HOUSE LATERALS
SCALE: NTS

BLOW-OFF SIZES REQUIRED	
MAIN SIZE	BLOW-OFF SIZE
4" TO 6"	2"
8" TO 12"	4"
14" TO 18"	6"
20" & UP	PER ENGR.

NOTES:

1. BACKFILL WITH SELECT CRUSHED AGGREGATE A MINIMUM OF 6" ON ALL SIDES.

2. ON TEMPORARY BLOW-OFFS ONLY, AN MJ CAP TAPPED 4" OR 6" MAY BE SUBSTITUTED FOR REDUCER.

3. TEMPORARY BLOW-OFF IS ONE REMOVED AT THE END OF PROJECT CONSTRUCTION. A PERMANENT BLOW-OFF REMAINS ON THE PROJECT AFTER ACCEPTANCE.

4. PLACE BLOW-OFF STANDPIPE 3-FEET INSIDE R.O.W. LINE AT END OF STREET (2-FEET FROM BARRICADE.)

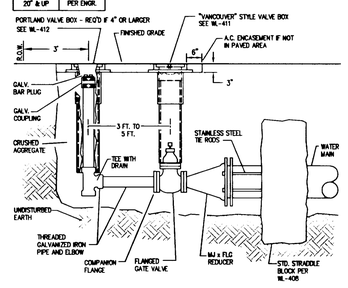

CITY OF WEST LINN – WL-404B
PERMANENT OR TEMPORARY 4" & 6" BLOW-OFF ASSEMBLY
SCALE: NTS

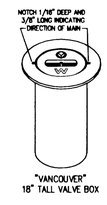

NOTES:

1. VALVE BOXES SHALL BE CENTERED DIRECTLY OVER THE VALVE NUT IN A VERTICAL POSITION.

2. VALVE BOX TOP SHALL BE ADJUSTED TO MEET FINISHED GRADE.

3. PVC SHALL BE ONE CONTINUOUS PIECE - NO BELLS OR COUPLERS.

CITY OF WEST LINN – WL-411
STANDARD VALVE BOX
SCALE: NTS

REGISTERED PROFESSIONAL ENGINEER 7120 OREGON JULY 16, 1971 BRUCE D. GOLDSON

EXPIRES: 6/30/2003
SIGNATURE DATE: 11/30/01

AS-BUILT
DATE: JULY. 08, 2002

SANITARY SEWER PROFILE

DATE	NO.	REVISION
07/08/02	3	AS-BUILT
11/30/01	2	REVISED PER CITY
11/14/01	1	REVISED PER CITY LETTER AND MEETING

DRAWN BJS | DESIGNED JBS | CHECKED BDG
SCALE 1" = 20" | DATE APR, 2001
PLAN 00-4541.1-2473 | 45411Civil

COMPASS ENGINEERING
ENGINEERING ★ SURVEYING ★ PLANNING
6564 S.E. LAKE ROAD
MILWAUKIE, OREGON 97222
compass@northwest.com
(503) 653-9093 PHONE
(503) 653-9095 FAX

CENTURION HOMES
2137 MARYLWOOD CT.
WEST LINN, OR
503-656-8411

CENTURION ESTATES
TAX LOT 1100 - 2-1E-23BC
WEST LINN, OREGON

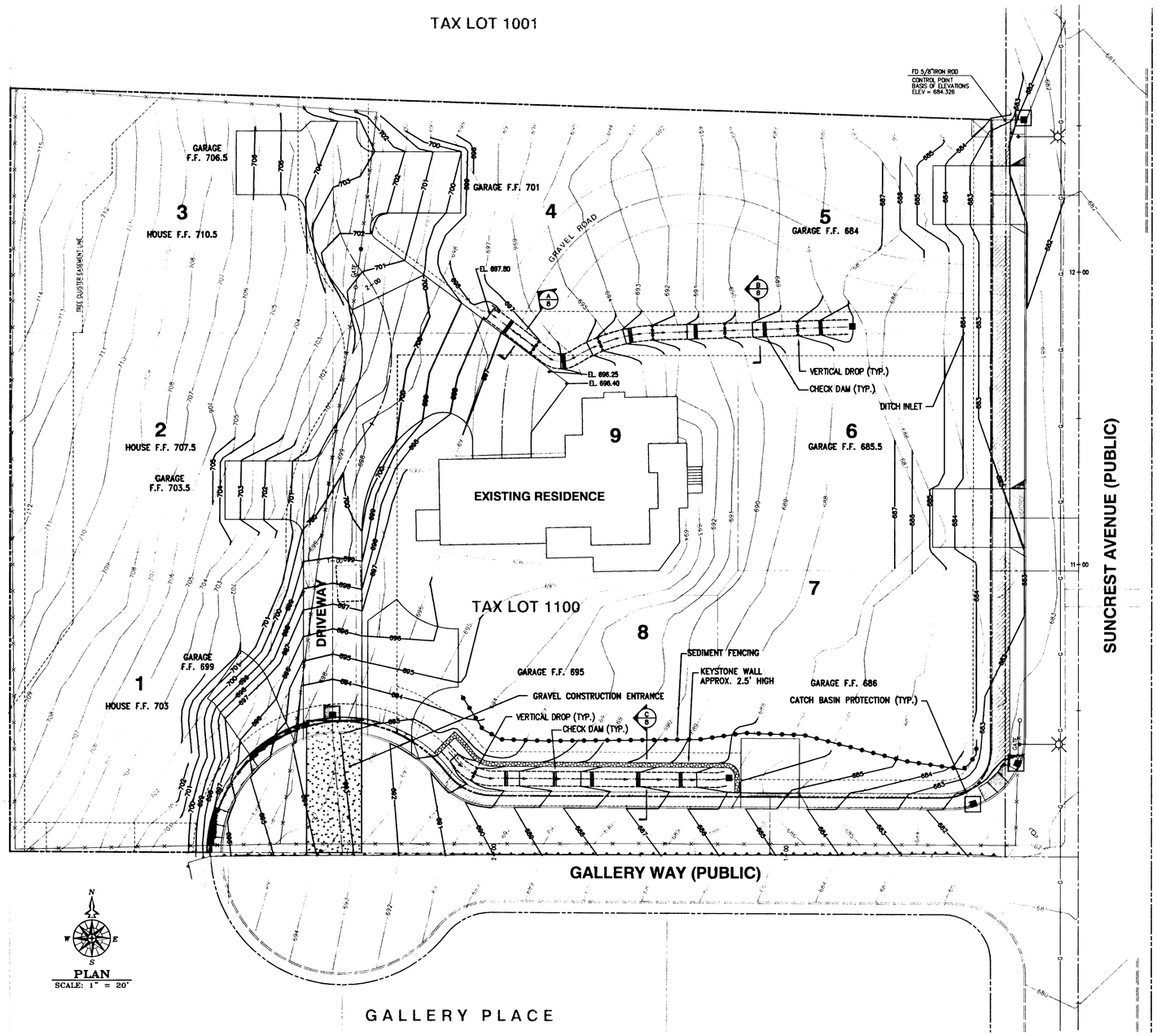

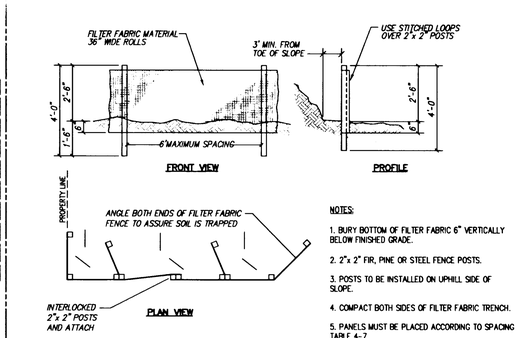

NOTES:

1. BURY BOTTOM OF FILTER FABRIC 6" VERTICALLY BELOW FINISHED GRADE.
2. 2"x 2" FIR, PINE OR STEEL FENCE POSTS.
3. POSTS TO BE INSTALLED ON UPHILL SIDE OF SLOPE.
4. COMPACT BOTH SIDES OF FILTER FABRIC TRENCH.
5. PANELS MUST BE PLACED ACCORDING TO SPACING TABLE 4-7.

SEDIMENT FENCE
SCALE: NTS

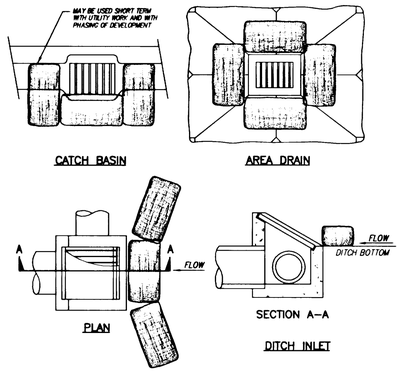

TEMPORARY BIOFILTER BAGS
SCALE: NTS

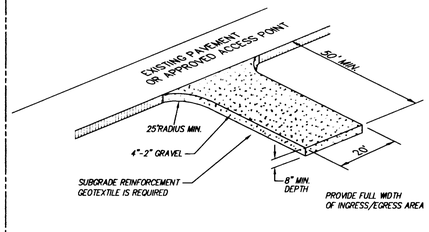

GRAVEL CONSTRUCTION ENTRANCE
SCALE: NTS

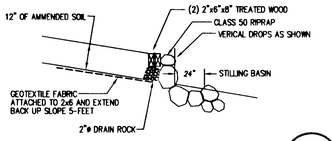

SWALE VERTICAL DROP (D/8)
SCALE: NTS

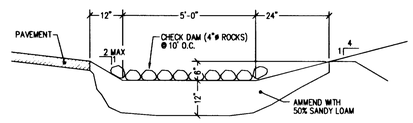

LANSCAPE SWALE (A/8)
SCALE: NTS

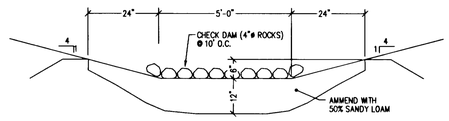

LANSCAPE SWALE (B/8)
SCALE: NTS

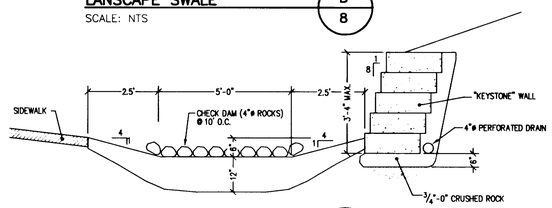

LANSCAPE SWALE (C/8)
SCALE: NTS

PLANTING SCHEDULE

HOBBS AND HOBKINS, PRO-TIME 835, BIOFILTER SUMMER GREEN VEGETATIVE COVER (OR EQUAL)

ELKA PERENNIAL RYEGRASS	60.0%
EUREKA HARD FESCUE	15.0%
YARROW MILLEFOLIUM	8.5%
SWEET ALYSSUM	3.0%
SHAMROCK	3.0%
DUTCH WHITE CLOVER	7.0%
SLAINA'S STRAWBERRY CLOVER	4.0%

REGISTERED PROFESSIONAL ENGINEER 7120 OREGON JULY 16, 1971 BRUCE D. GOLDSON

EXPIRES: 6/30/2003
SIGNATURE DATE: 01/29/02

AS-BUILT
DATE: JULY. 08, 2002

GRADING AND EROSION CONTROL PLAN

DATE	NO.	REVISION
07/08/02	4	AS-BUILT
01/29/02	3	ADD SWALE & DETAILS PER CITY AND OWNER
01/17/02	2	ADD SWALE & DETAILS PER CITY
11/13/01	1	REVISED PER CITY LETTER AND MEETING

DRAWN BJS | DESIGNED BDG | CHECKED BDG
SCALE 1" = 20" | DATE APR. 2001
PLAN 00-4541.1-2473 | 45411Civil

COMPASS ENGINEERING
ENGINEERING ★ SURVEYING ★ PLANNING
6564 S.E. LAKE ROAD
MILWAUKIE, OREGON 97222
compass@northwest.com
(503) 653-9093 PHONE
(503) 653-9095 FAX

CENTURION HOMES
2137 MARYLWOOD CT.
WEST LINN, OR
503-656-8411

CENTURION ESTATES
TAX LOT 1100 - 2-1E-23BC
WEST LINN, OREGON

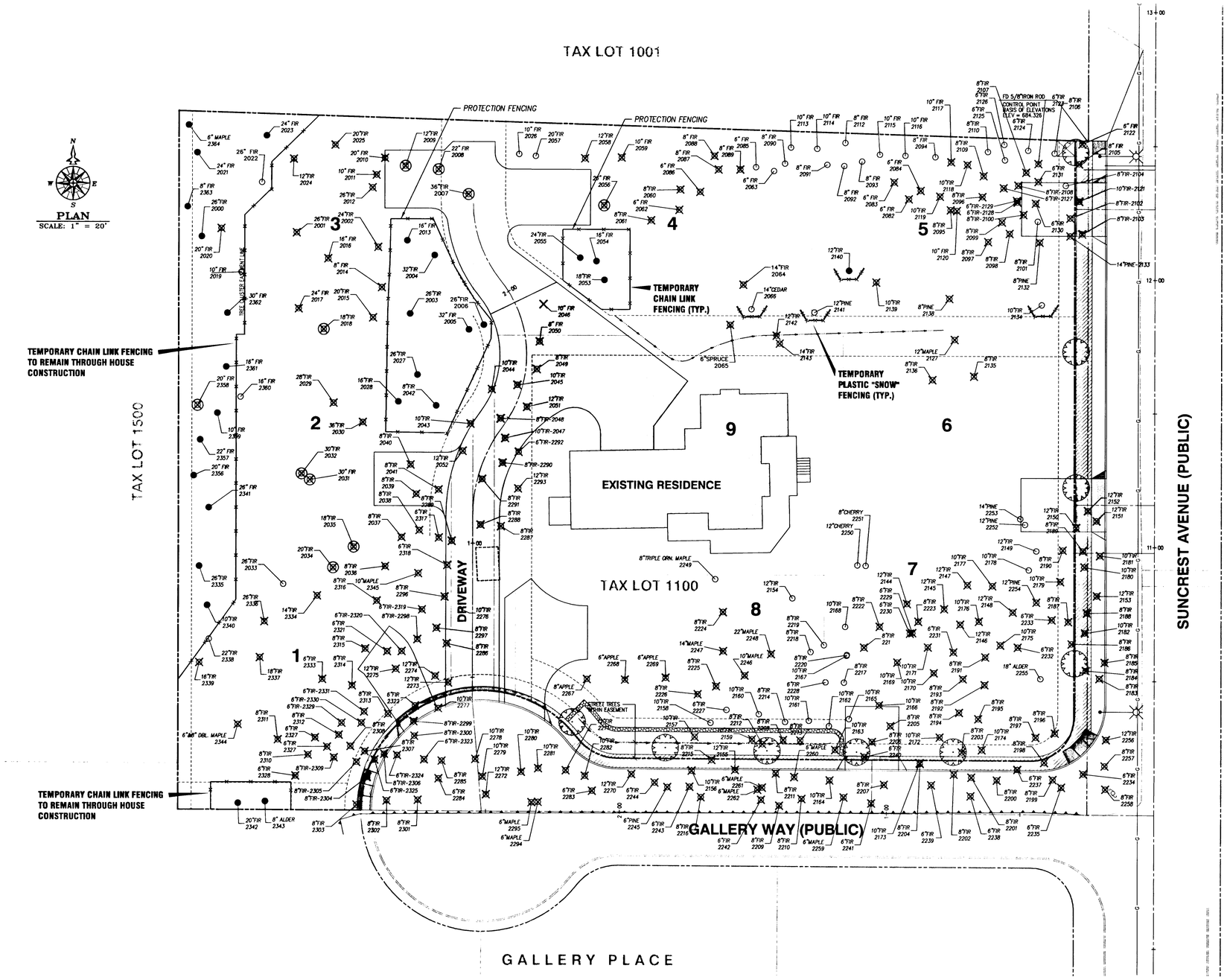

*** PROTECTION FENCING LIMITS**

THIS LINE WILL BE ESTABLISHED AND FENCED PRIOR TO CONSTRUCTION OF UTILITIES AND WILL BE REMOVED UPON ACCEPTANCE OF THE UTILITIES.

* THE CITY ARBORIST SHALL INSPECT AND APPROVE ALL ON-SITE TREE PROTECTION MEASURES. (SEE CONDITION NO. 2C)

LOCATION OF TEMPORARY FENCING SHALL BE AS DIRECTED BY THE CITY ARBORIST. MODIFICATIONS AS REQUIRED DURING CONSTRUCTION WILL BE COORDINATED AND APPROVED BY THE CITY ARBORIST.

KEY

- 18" TREE TO BE SAVED, PER CITY ARBORIST (APRIL 10, 2001)
- 18" EXISTING TREES PER FIELD LAYOUT
- 18" TREE AT RISK, TO BE REMOVED
- 18" TREE TO BE REMOVED
- NEW STREET TREE TO BE PLANTED, SPECIES PER THE APPROVED CITY DIRECTOR'S LISTING
- PROTECTION FENCING*
- TREE CLUSTER EASEMENT*

REGISTERED PROFESSIONAL ENGINEER 7120 OREGON JULY 16, 1971 BRUCE D. GOLDSON

EXPIRES: 6/30/2003
SIGNATURE DATE: 11/12/01

AS-BUILT
DATE: JULY. 08, 2002

TREE REMOVAL PLAN

DATE	NO.	REVISION
07/08/02	3	AS-BUILT
01/29/02	2	REVISED DRIVEWAYS
11/12/01	1	REVISED PER CITY LETTER AND MEETING

DRAWN BJS | DESIGNED BDG | CHECKED BDG
SCALE 1" = 20" | DATE APR. 2001
PLAN 00-4541.1-2473 | 45411Civil

COMPASS ENGINEERING
ENGINEERING ★ SURVEYING ★ PLANNING
6564 S.E. LAKE ROAD
MILWAUKIE, OREGON 97222
compass@northwest.com
(503) 653-9093 PHONE
(503) 653-9095 FAX

CENTURION HOMES
2137 MARYLWOOD CT.
WEST LINN, OR
503-656-8411

CENTURION ESTATES
TAX LOT 1100 - 2-1E-23BC
WEST LINN, OREGON