CONSTRUCTION DRAWINGS FOR

1997 STORM WATER CAPITAL IMPROVEMENT PROJECTS

CI-96-13 AND CI-96-14

for the

CITY OF WEST LINN

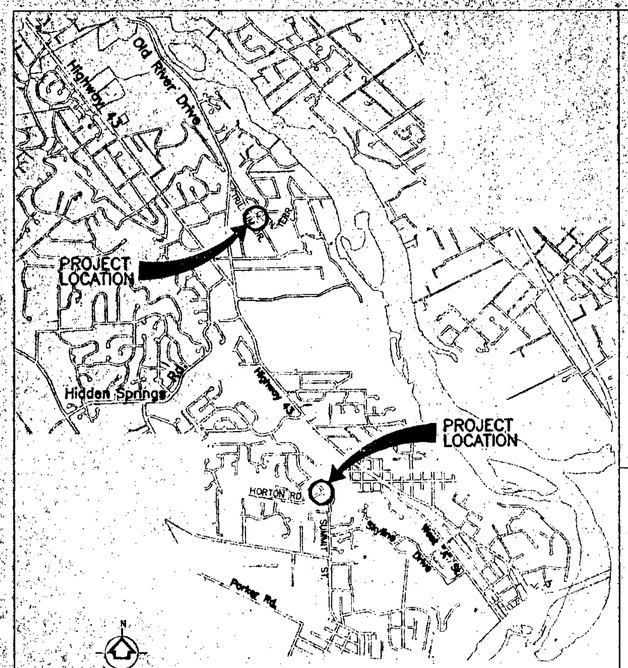

VICINITY MAP

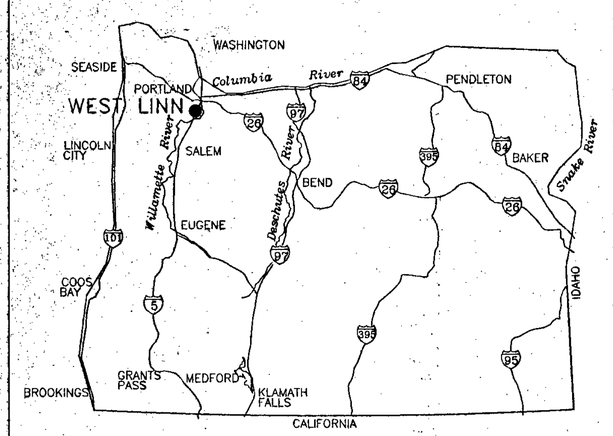

LOCATION MAP

DRAWING REFERENCE

NOTE:
THE SYMBOLS LISTED ON THIS SHEET ARE TYPICAL SYMBOLS THAT WILL BE USED IN THIS SET OF PLANS. SPECIAL SYMBOLS WILL BE NOTED ON THE SHEETS THAT THEY APPLY TO.

1. DRAWINGS ARE CROSS REFERENCED IN THE FOLLOWING MANNER:
   (a) SECTION CUT ON DRAWING C8:
   - 1 — SECTION IDENTIFICATION
   - C9 — DRAWING ON WHICH SECTION APPEARS

   (b) ON DRAWING C09 THE SECTION IS IDENTIFIED AS:
   - 1 — SECTION IDENTIFICATION
   - C8 — DRAWING FROM WHICH THE SECTION WAS TAKEN

   (c) SECTION CUT AND SHOWN ON SAME DRAWING:
   - 1 — SECTION IDENTIFICATION
   - C9 — SAME DRAWING
2. PLANS, DETAILS AND ELEVATIONS ARE CROSS REFERENCED IN A SIMILIAR MANNER.
3. SECTION REFERENCED IN TEXT, "SEE 5/C6" MEANS SEE SECTION 5 OR DETAIL 5 ON DRAWING NUMBER C6.

LEGEND

SYMBOL (EXISTING)	DESCRIPTION	SYMBOL (THIS CONTRACT)	DESCRIPTION
	CONTOUR		CONSTRUCTION EASEMENT
	PROPERTY LINE		RIGHT-OF-WAY OR PROPERTY LINE
PGE	ELECTRIC LINE		RIP-RAP
USW	TELEPHONE LINE		GROUTED RIP-RAP
W	WATERLINE		
SS	SANITARY SEWER		
D	STORM DRAIN		
	MAIL BOX		
	WATER METER		
	SIGN		
	SANITARY MANHOLE		
	UTILITY POLE		

ABBREVIATION

SYMBOL	DESCRIPTION
CI	CAST IRON
CIP	CAST-IN-PLACE CONCRETE
℄	CENTERLINE
CO	CLEAN-OUT
CONC	CONCRETE
DET	DETAIL
DI	DUCTILE IRON
DIA	DIAMETER
DTL	DETAIL
DWG	DRAWING
EL	ELEVATION
ELEC	ELECTRICAL
EW	EACH WAY
FL	FLOW
FLG	FLANGE
FTG	FOOTING
GALV	GALVANIZED
HORIZ	HORIZONTAL
HM	HOLLOW METAL
INSUL	INSULATION
MAT'L	MATERIAL
MAX	MAXIMUM
MTL	METAL
MIN	MINIMUM
MJ	MECHANICAL JOINT
NEC	NECESSARY
NIC	NOT IN CONTRACT
OC	ON CENTER
PE	PLAIN END
PT	PRESSURE TREATED
REQ'D	REQUIRED
SCS	STANDARD CONSTRUCTION SPECIFICATIONS
SHT	SHEET
SIM	SIMILAR
SPEC'S	SPECIFICATIONS
SS	STAINLESS STEEL
STL	STEEL
STD	STANDARD
TYP	TYPICAL
VERT	VERTICAL
W/	WITH
WL	WATERLINE

INDEX TO DRAWINGS

SHEET NUMBER	DRAWING NUMBER	DRAWING TITLE
GENERAL		
1	G1	COVER SHEET
CIVIL		
2	C1	PROJECT CI-96-13 PLAN
3	C2	PROJECT CI-96-14 PLAN AND PROFILE
4	C3	DETAILS
5	C4	DETAILS

GENERAL NOTES

1. ALL CONSTRUCTION SHALL BE TO CITY OF WEST LINN AND APWA STANDARDS AND SPECIFICATIONS.
2. IT SHALL BE THE RESPONSIBILITY OF THE CONTRACTOR TO CONSULT WITH THE OWNERS OF THE VARIOUS UTILITIES AND VERIFY UTILITY LOCATIONS PRIOR TO CONSTRUCTION, AS NECESSARY.
3. THE CONTRACTOR SHALL MAINTAIN ACCESS TO ALL DRIVEWAYS. IF A DRIVEWAY MUST BE BLOCKED, THE CONTRACTOR SHALL GIVE THE HOMEOWNER OR BUSINESS 24 HOURS NOTICE AND SHALL ENSURE ACCESS TO DRIVEWAYS AT THE END OF EACH WORK DAY.
4. DO NOT DAMAGE OR REMOVE TREES EXCEPT AS APPROVED BY THE ENGINEER OR AS SHOWN ON THE PLANS. PROTECT ALL ROOTS TWO INCHES IN DIAMETER OR LARGER.
5. REMOVE AND REPLACE EXISTING SIGNS, MAILBOXES, FENCES, AND OTHER STRUCTURES AS REQUIRED TO AVOID DAMAGE DURING CONSTRUCTION.
6. PROTECT ALL SURVEY MONUMENTS AND REPLACE ANY DISTURBED PERMANENT MARKERS.
7. LIMITS ON IN-STREAM WORK AS PER PERMIT.
8. SEE EACH INDIVIDUAL PROJECT FOR SURVEY CONTROL.

This drawing is full size when 22"x 34" or is reduced to half size when 11"x17"

G1 1=1 2740055 8.14.97

KCM, Inc.
7080 SW Fir Loop
Portland, Oregon 97223

date AUG 1997	designed by JAH
	drawn by DM
scale AS NOTED	checked by DM
	approved by DM

REGISTERED PROFESSIONAL ENGINEER 9504 OREGON JERRY D. MINOR — EXPIRES 12/31/98

REGISTERED PROFESSIONAL ENGINEER 18081 OREGON JAMES HARPER — EXPIRES 6/30/99

revisions

KCM NO. 2740055

City of West Linn, Oregon
1997 STORM WATER CAPITAL IMPROVEMENT PROJECTS CI-96-13 AND CI-96-14

GENERAL
COVER

drawing number G1

sheet number 1 of 5

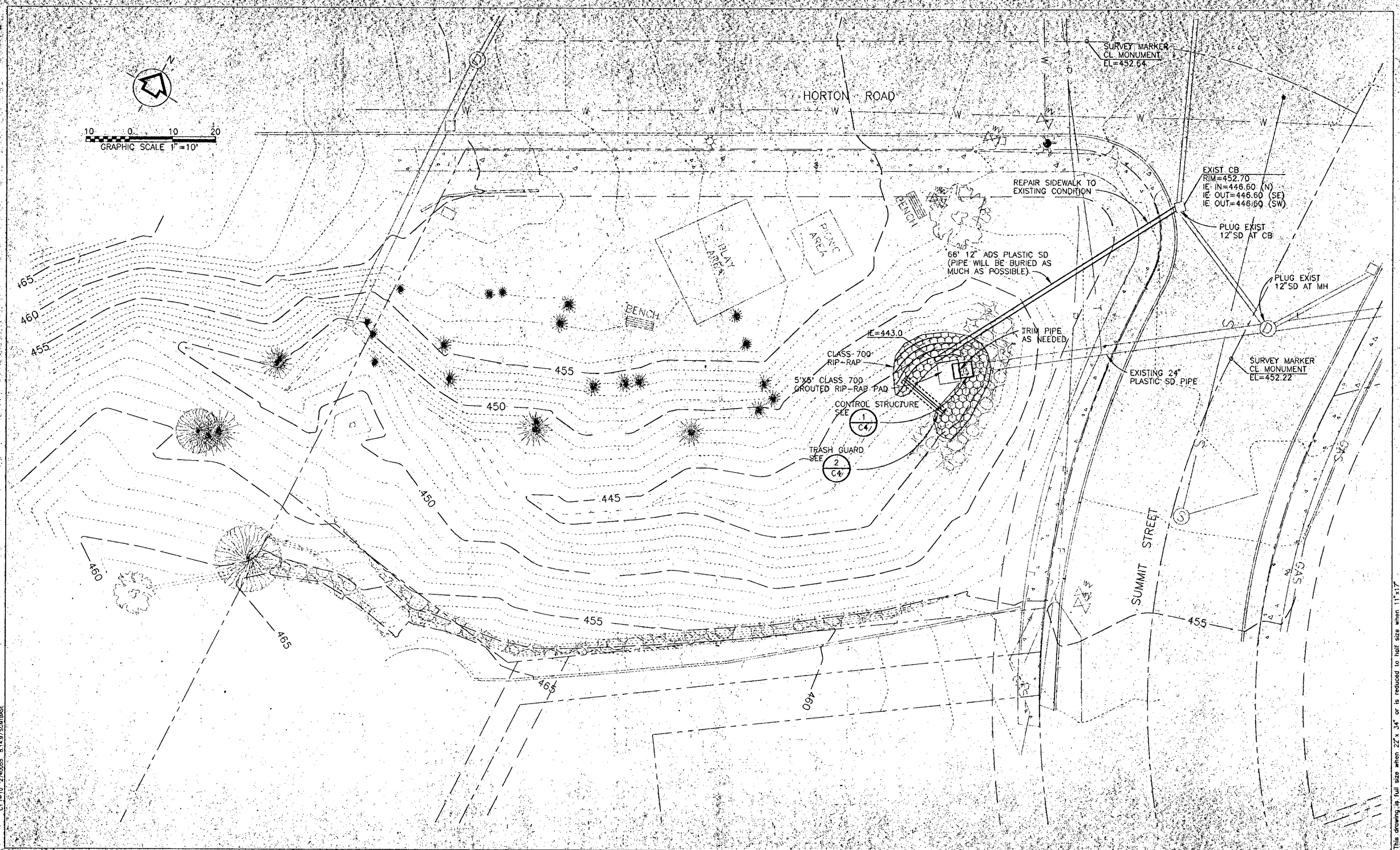

C1 1=10 2740055 8.14.97SJMTBASE

This drawing is full size when 22"x 34" or is reduced to half size when 11"x17"

KCM

KCM, Inc.
7080 SW Fir Loop
Portland, Oregon 97223

date AUG 1997	designed by JAH
	drawn by DM
scale AS NOTED	checked by JM
	approved by JM

REGISTERED PROFESSIONAL ENGINEER 9504 OREGON JERRY D. MINOR EXPIRES 12/31/98

REGISTERED PROFESSIONAL ENGINEER 18081 OREGON JAMES HARPER EXPIRES 6/30/99

revisions

KCM NO. 2740055

City of West Linn, Oregon
SUMMIT ST./HORTON RD.-DETENTION POND AND
MAINTENANCE FEATURES/PROJECT NO. CI-96-13

CIVIL

SITE PLAN

drawing number C1

sheet number 2 of 5

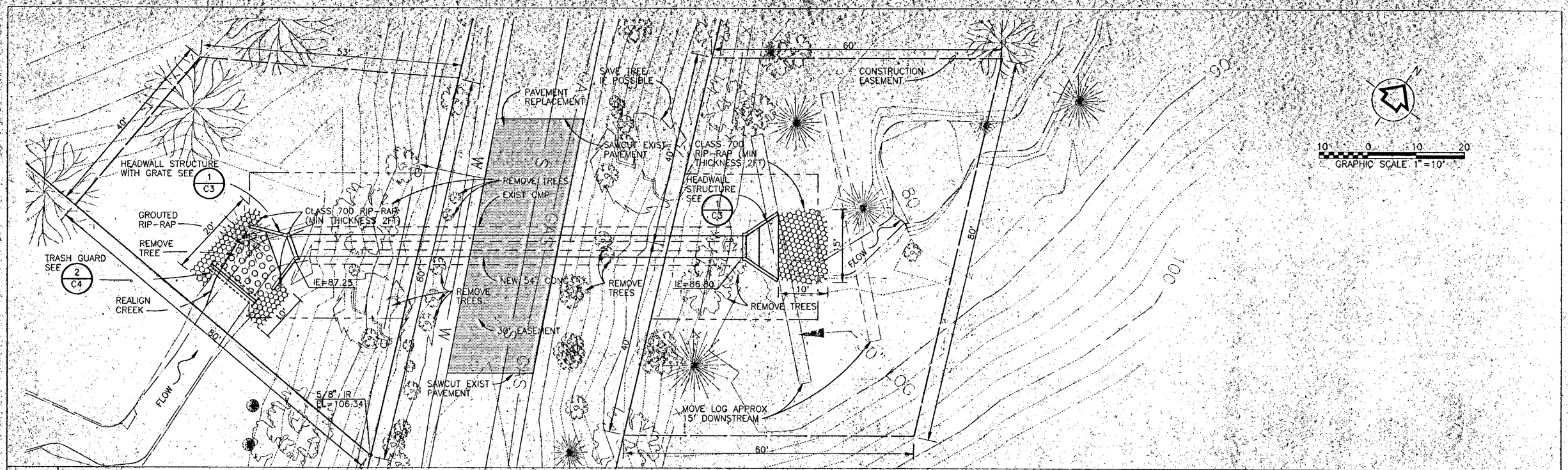

SCALE:
1"=10' HORIZONTAL
1"=10' VERTICAL

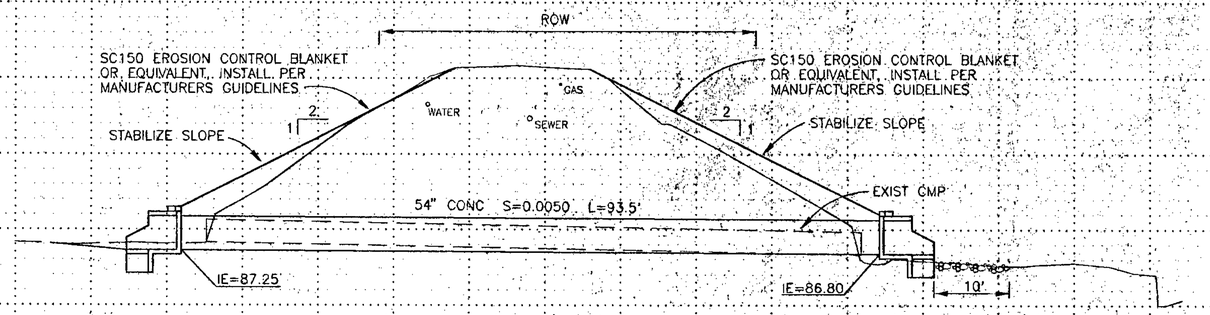

SLOPE STABILIZATION NOTES:

1. AFTER FINAL GRADES HAVE BEEN ACHIEVED FOR ENTIRE SITE SLOPE STABILIZATION WORK WILL BEGIN.
2. TREES REMOVED DURING CONSTRUCTION WILL BE REPLACED WITH LIKE TREES OR TREES APPROVED BY THE CITY OF WEST LINN ARBORISTS.
3. PROJECT WILL BE SEEDED OR HYDRO-SEEDED WITH MIXTURE APPROVED BY THE CITY PRIOR TO EROSION CONTROL BLANKET INSTALLATION.
4. FOR ALL FINAL SLOPES GREATER THAN 3:1 – SC150 EROSION CONTROL BLANKET OR EQUIVALENT WILL BE INSTALLED PER MANUFACTURER'S GUIDELINES (SHOWN WITHIN THE SPECIFICATION PACKAGE).

C2 1=10 2740055 8.14.97 PROTBASE.TRILBASE

This drawing is full size when 22"x 34" or is reduced to half size when 11"x17"

KCM
KCM, Inc.
7080 SW Fir Loop
Portland, Oregon 97223

date	designed by JAH
AUG 1997	drawn by DM
scale AS NOTED	checked by DM
	approved by DM

REGISTERED PROFESSIONAL ENGINEER 9504 OREGON JERRY D. MINOR EXPIRES 12/31/98

REGISTERED PROFESSIONAL ENGINEER 18081 OREGON JAMES HARPER EXPIRES 6/30/99

revisions

KCM NO. 2740055

City of West Linn, Oregon
TRILLIUM DRIVE - CULVERT REPLACEMENT
PROJECT NO. CI-96-14

CIVIL
PLAN AND PROFILE

drawing number C2
sheet number 3 of 5

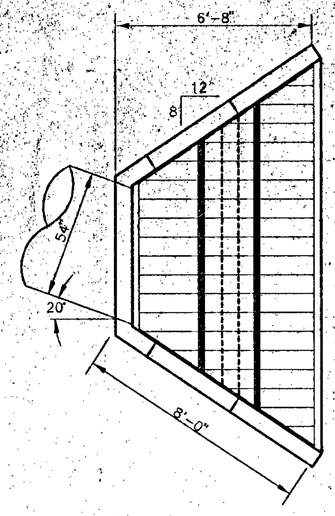

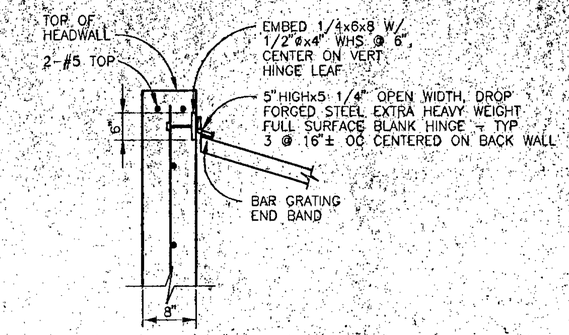

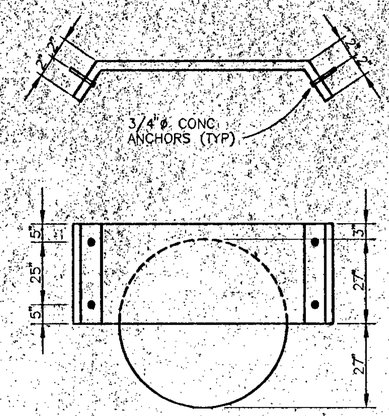

FLOW REDUCING STEEL PLATE DETAIL (2)
3/8"=1'-0"

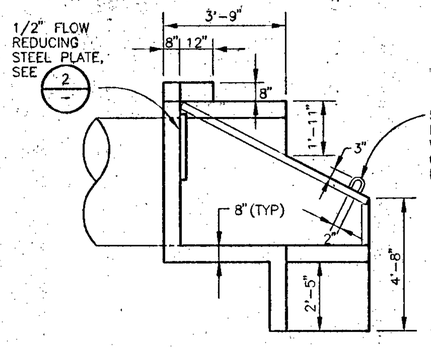

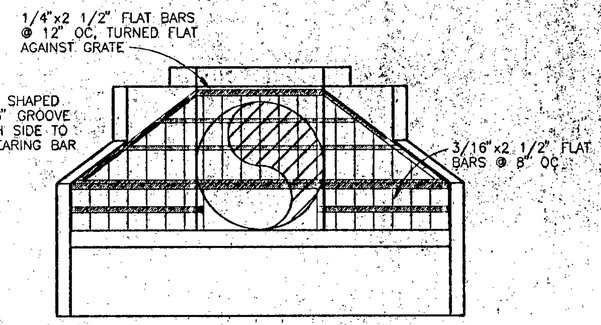

NOTES:

1. FOLLOW ODOT DETAIL 5-7.3 "ALTERNATIVE-"A" INLET DETAILS - 2:1 FILL SLOPE". FOR REINFORCEMENT DETAIL USE 5'-0" BARREL HEIGHT. FORM WALL AROUND 54" PIPE.
2. DOWNSTREAM HEADWALL IS THE SAME AS THE UPSTREAM HEADWALL WITHOUT GRATES, FLOW REDUCING STEEL PLATE, OR THE 20° SKEW.
3. ALL WALL THICKNESS ON THIS PAGE ARE 8" UNLESS OTHERWISE NOTED.

TRILLIUM HEADWALL DETAIL (1)
3/8"=1'-0"

STEEL NOTES:

A. CODES SPECIFICATIONS: STEEL CONSTRUCTION SHALL CONFORM TO THE SPECIFICATIONS AND STANDARDS AS CONTAINED IN THE 9TH EDITION OF THE AISC MANUAL OF STEEL CONSTRUCTION.

B. MATERIAL: STRUCTURAL SHAPES, BARS, PLATES AND SHEETS INDICATED ON THE DRAWINGS SHALL BE STEEL MEETING ASTM A36 SPECIFICATIONS. BOLTS SHALL CONFORM TO ASTM A307.

C. WELDING: WELDING SHALL CONFORM TO AWS D1.1 CODE FOR ARC AND GAS WELDING IN BUILDING CONSTRUCTION. ELECTRODE SHALL BE E70XX LOW HYDROGEN GROUP. WELDING SHALL BE CONDUCTED BY WELDERS CERTIFIED BY THE AWS. ALL WELDS SHALL BE MIN 3/16" FILLET UNLESS OTHERWISE NOTED.

D. HOT-DIP GALVANIZING: UNLESS OTHERWISE NOTED, ALL STEEL FABRICATIONS SHALL BE HOT-DIPPED GALVANIZED AFTER FABRICATION.

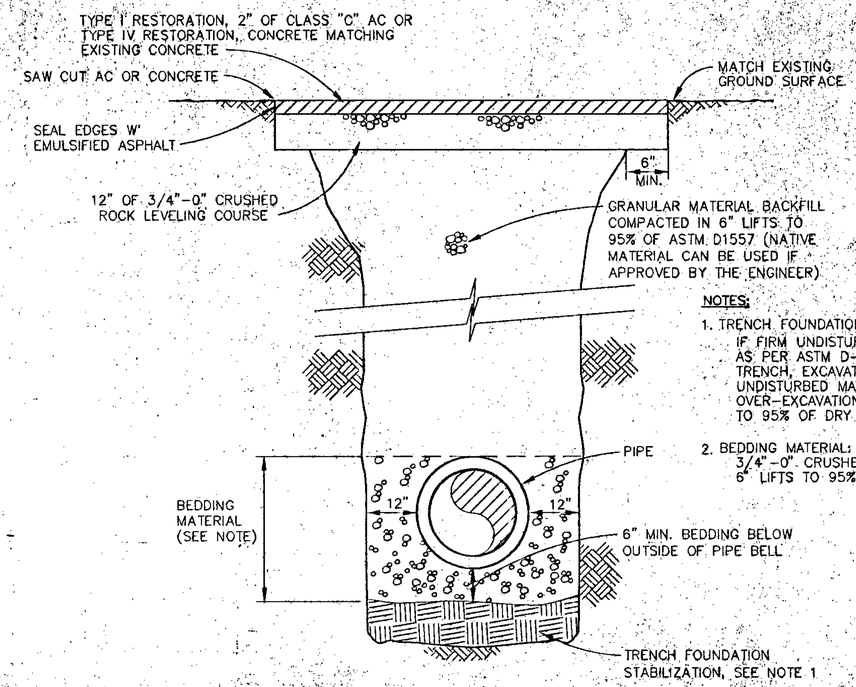

NOTES:

1. TRENCH FOUNDATION STABILIZATION:
   IF FIRM UNDISTURBED MATERIAL (90% DRY DENSITY AS PER ASTM D-1557 IS NOT PRESENT AT BOTTOM OF TRENCH, EXCAVATION MUST CONTINUE UNTIL FIRM UNDISTURBED MATERIAL IS REACHED. BACKFILLING OF OVER-EXCAVATION WILL BE IN 9" LIFTS COMPACTED TO 95% OF DRY DENSITY AS PER ASTM D-1557.
2. BEDDING MATERIAL:
   3/4"-0" CRUSHED AGGREGATE, COMPACTED AT 6" LIFTS TO 95% OF ASTM D-1557.

TRILLIUM DRIVE TRENCH SECTION (3)
NO SCALE

This drawing is full size when 22"x 34" or is reduced to half size when 11"x17"

03.1-32" 2740055 8.14.97

KCM, Inc.
7080 SW Fir Loop
Portland, Oregon 97223

date AUG 1997	designed by JM
	drawn by DM
scale AS NOTED	checked by JM
	approved by JM

REGISTERED PROFESSIONAL ENGINEER 9504 OREGON JERRY D. MINOR — EXPIRES 12/31/98

REGISTERED PROFESSIONAL ENGINEER 18081 OREGON JAMES HARPER — EXPIRES 6/30/99

revisions

KCM NO. 2740055

City of West Linn, Oregon
1997 STORM WATER CAPITAL IMPROVEMENT PROJECTS CI-96-13 AND CI-96-14

CIVIL
DETAILS

drawing number C3
sheet number 4 of 5

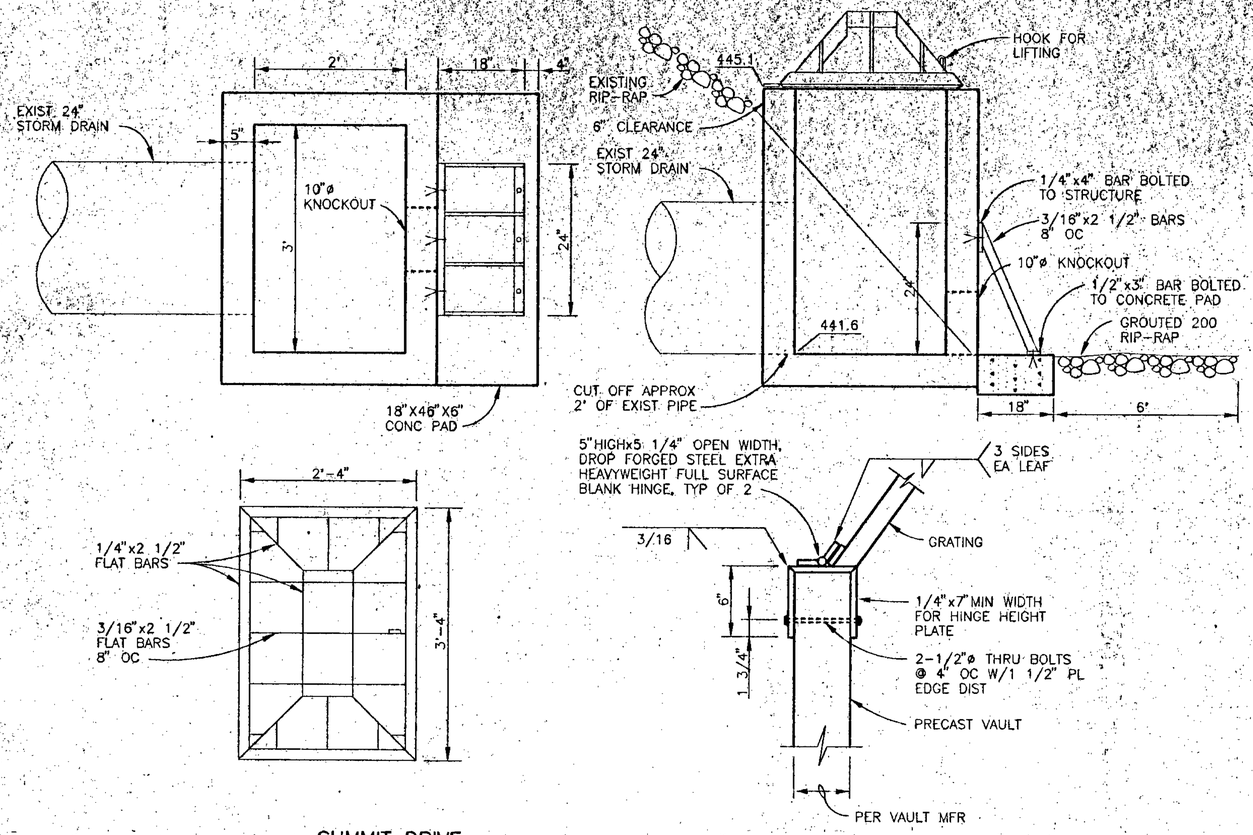

SUMMIT DRIVE
INTAKE STRUCTURE
NO SCALE

1
–

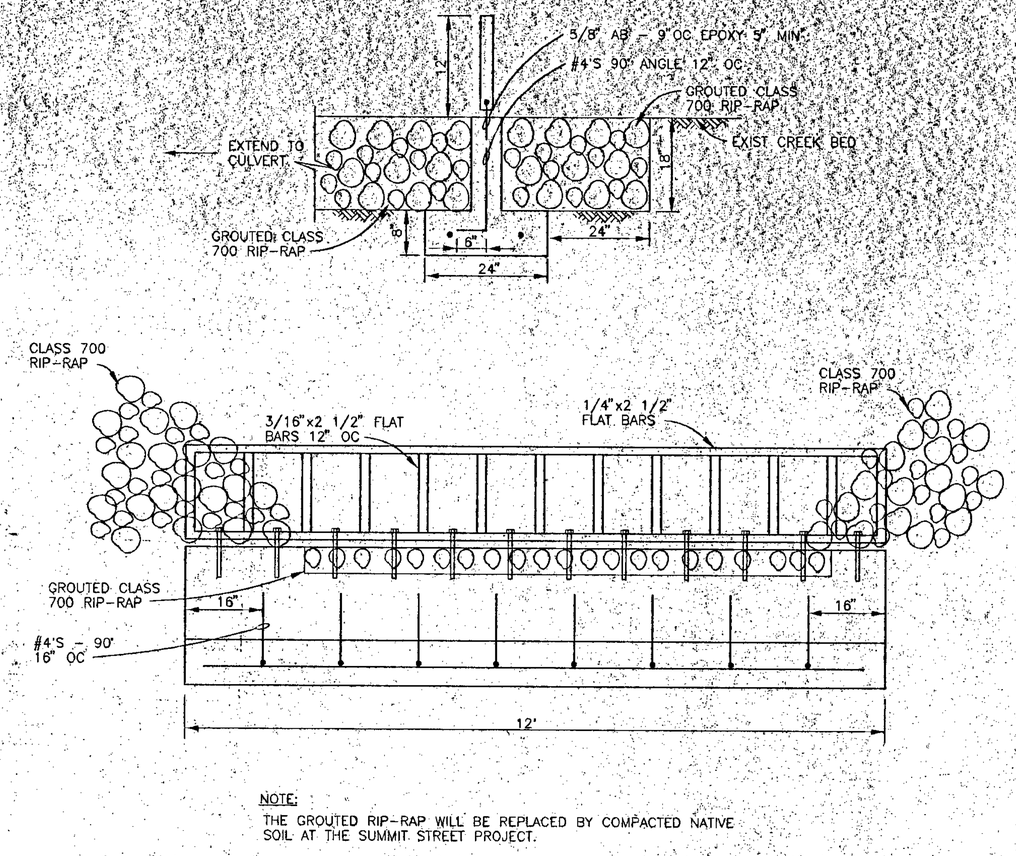

NOTE:
THE GROUTED RIP-RAP WILL BE REPLACED BY COMPACTED NATIVE SOIL AT THE SUMMIT STREET PROJECT.

TRASH GUARD
NO SCALE

2
–

This drawing is full size when 22" x 34" or is reduced to half size when 11"x17"

04 1=1 2740055 8.14.97

KCM

KCM, Inc.
7080 SW Fir Loop
Portland, Oregon 97223

date AUG. 1997	designed by JAH
	drawn by DM
scale AS NOTED	checked by DM
	approved by DM

REGISTERED PROFESSIONAL ENGINEER 9504 OREGON JERRY D. MINOR EXPIRES 12/31/98

REGISTERED PROFESSIONAL ENGINEER 18081 OREGON JAMES HARPER EXPIRES 6/30/99

revisions

KCM NO. 2740055

City of West Linn, Oregon
1997 STORM WATER CAPITAL IMPROVEMENT
PROJECTS CI-96-13 AND CI-96-14

CIVIL
DETAILS

drawing number C4
sheet number 5 of 5