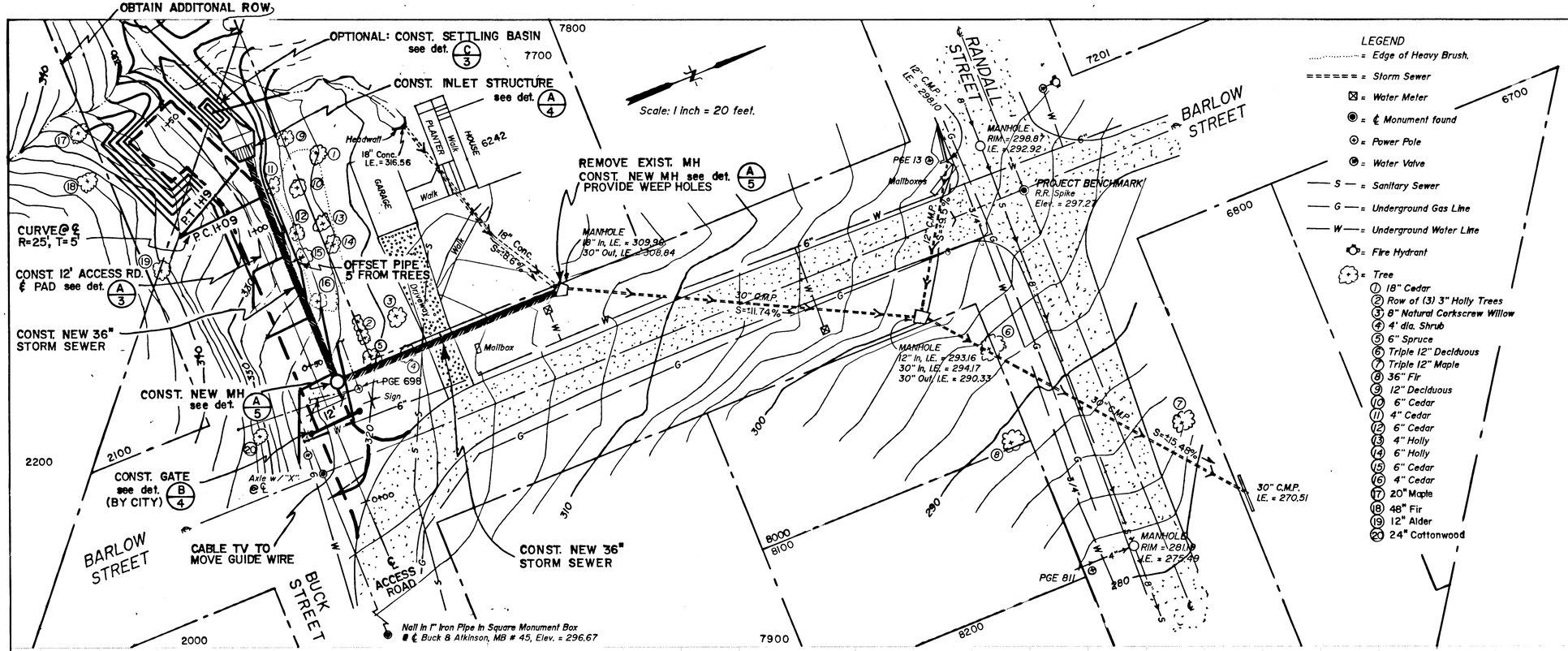

LEGEND

- ..... = Edge of Heavy Brush.
- ====== = Storm Sewer
- ⊠ = Water Meter
- ◉ = ℄ Monument found
- ⊕ = Power Pole
- ⊗ = Water Valve
- —— S —— = Sanitary Sewer
- —— G —— = Underground Gas Line
- —— W —— = Underground Water Line
- = Fire Hydrant
- = Tree
  1. 18" Cedar
  2. Row of (3) 3" Holly Trees
  3. 8" Natural Corkscrew Willow
  4. 4' dia. Shrub
  5. 6" Spruce
  6. Triple 12" Deciduous
  7. Triple 12" Maple
  8. 36" Fir
  9. 12" Deciduous
  10. 6" Cedar
  11. 4" Cedar
  12. 6" Cedar
  13. 4" Holly
  14. 6" Holly
  15. 6" Cedar
  16. 4" Cedar
  17. 20" Maple
  18. 48" Fir
  19. 12" Alder
  20. 24" Cottonwood

TOPOGRAPHIC SURVEY
for
CITY of WEST LINN

JOHN G. REPPETO
LAND SURVEYOR
1225 NW Murray Rd. - Room 202
Portland, OR 97229

(503) 643-8755

REGISTERED PROFESSIONAL LAND SURVEYOR
John G. Reppeto
OREGON
REGISTERED
JOHN G. REPPETO
657

VICINITY MAP

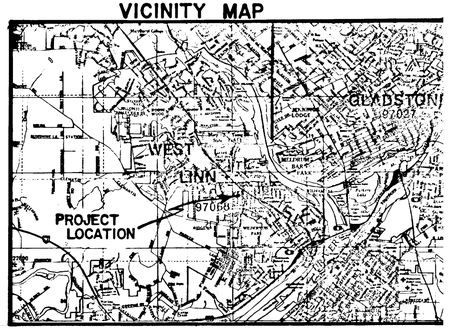

PLAN
SURVEYED
PLOTTED
DRAWN
ALIGNMENT CHECKED
BY OF WAY CHECKED
NOTE BOOK
No.
DATE
BY

GENERAL NOTES:

1. All construction to meet provisions of the City of West Linn Construction standards and any permit conditions.
2. Provide erosion control meeting the City of West Linn Standards. See details F, G & H sheet 5.
3. Seed area's disturbed by construction w/grass seed.
4. Construction operations shall avoid destruction of existing tree's & vegetation where possible.
5. Concrete pipe to be tongue and groove joint type.

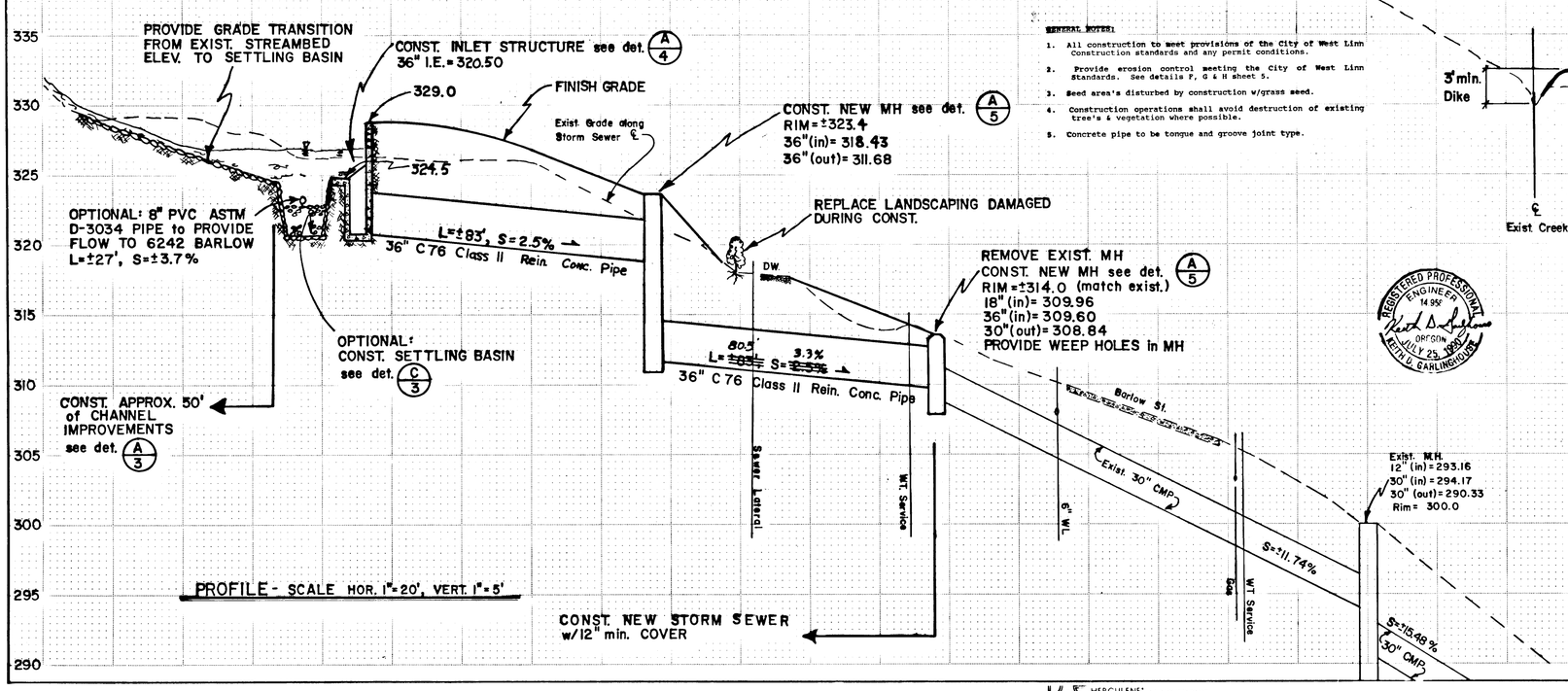

PROFILE - SCALE HOR. 1"=20', VERT. 1"=5'

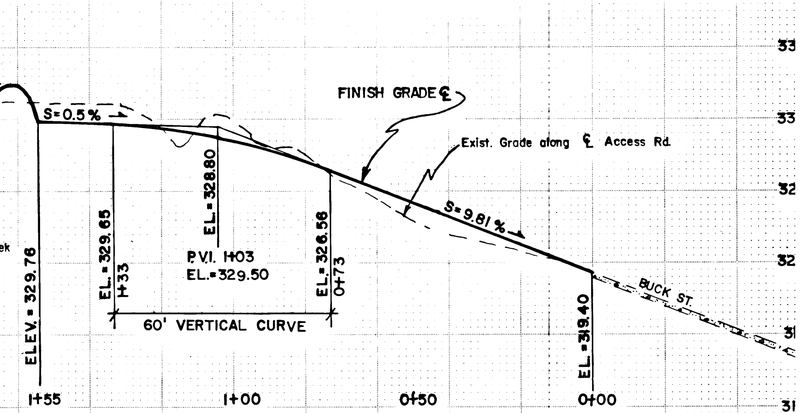

ACCESS ROAD PROFILE - SCALE HOR. 1"=20', VERT. 1"=5'

REGISTERED PROFESSIONAL ENGINEER 14,951 OREGON JULY 25, 1991 KEITH D. GARLINGHOUSE

AS BUILT 6/92

DATE	REVISIONS

CITY OF WEST LINN
BUCK/BARLOW ST. STORM SEWER IMPROVEMENT

DATE 8/26/91	DRAWN BY KG	APPROVED BY	SHEET	PROJECT NO. CI-91-03
SCALE as shown	CHK'D BY STAFF	FIELD BOOK in file	1 OF 5	DRAWING NO

K+E HERCULENE® CRYSTALENE® II

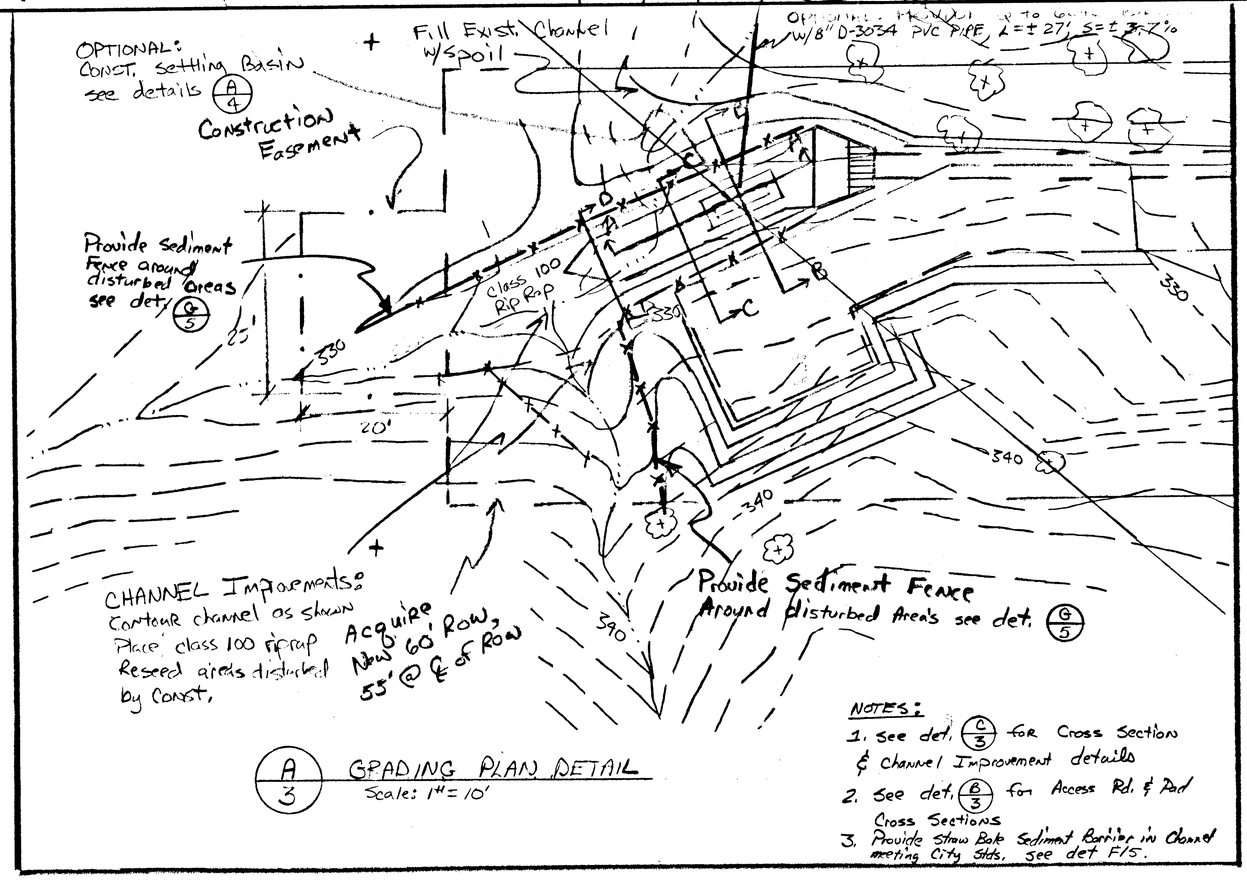

NOTES:

1. See det. C/3 for Cross Section & Channel Improvement details
2. See det. B/3 for Access Rd. & Pad Cross Sections
3. Provide Straw Bale Sediment Barrier in Channel meeting City Stds. see det F/5.

A/3 GRADING PLAN DETAIL
Scale: 1" = 10'

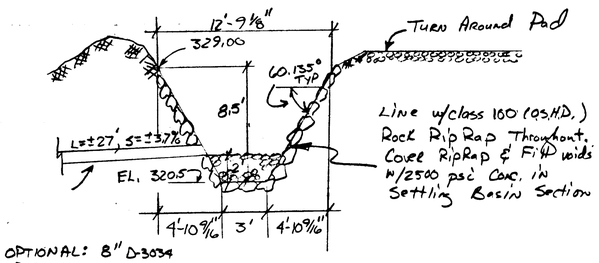

SECTION B-B

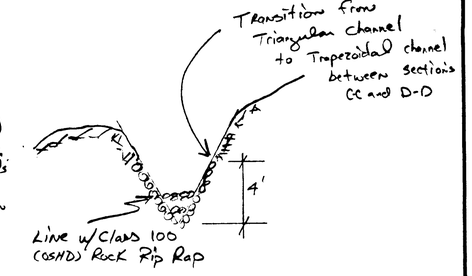

SECTION D-D

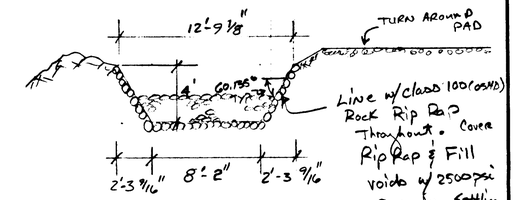

SECTION C-C

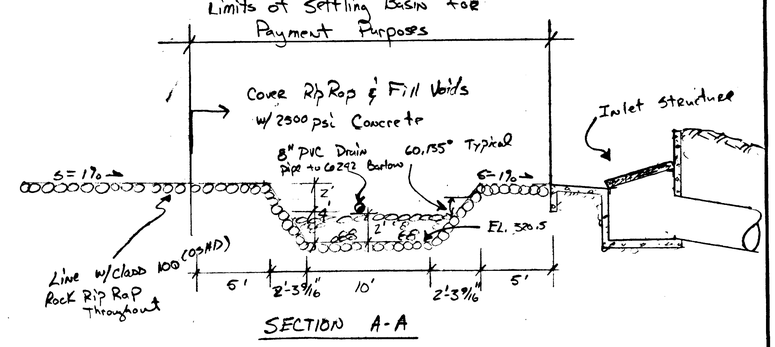

SECTION A-A

C/3 SETTLING BASIN DETAILS
SCALE: HOR. 1" = 10', VERT 1" = ~~10~~ 5'

AS BUILT 6/92

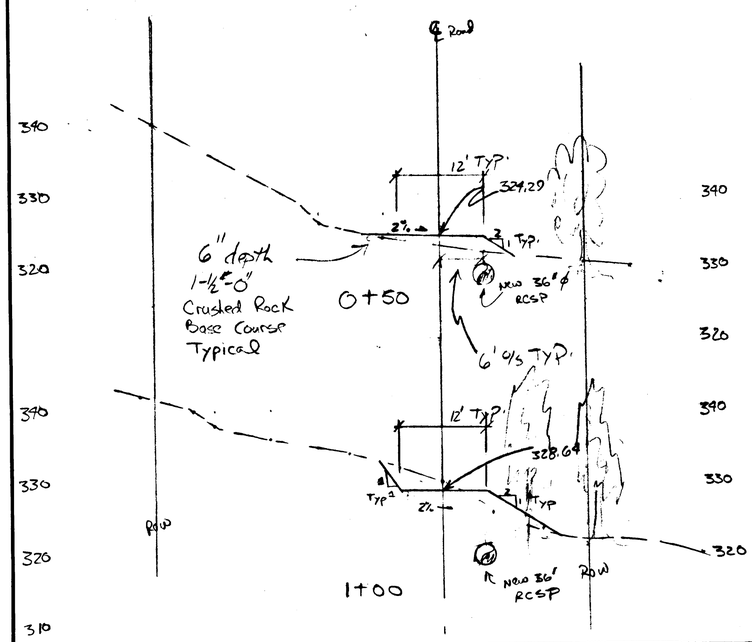

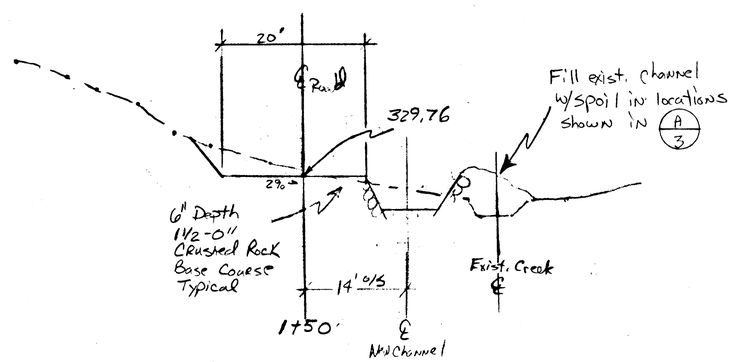

B/3 Access Rd & Pad Cross Sections
Scale: HOR 1" = 10', VERT 1" = 10'

REGISTERED PROFESSIONAL ENGINEER 14356 OREGON JULY 25, 1989 KEITH D. GARLINGHOUSE

DATE	NO.	REVISION	DRAWN	
			FILE CI-91-03	DATE 10-5-91
			SCALE: AS SHOWN	

CITY OF WEST LINN
PUBLIC WORKS DEPARTMENT

Buck/Barlow St. Storm Sewer Improvement
Detail Sheet Project CI-91-03

3/5

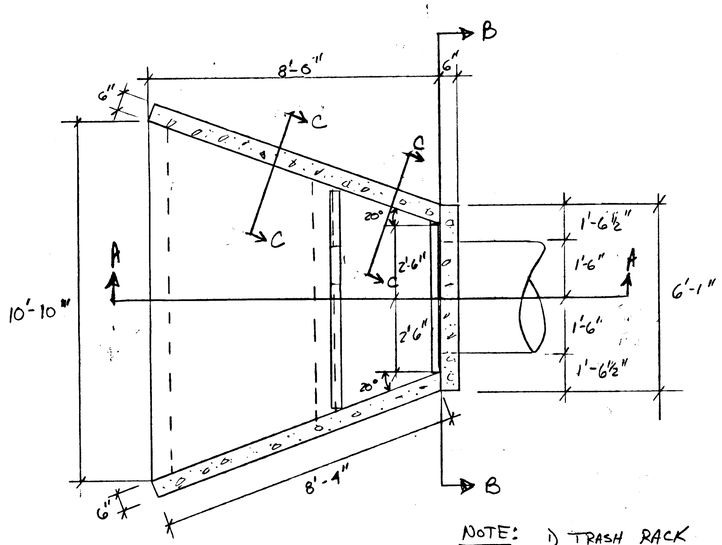

NOTE: 1) TRASH RACK omitted from View

PLAN NTS

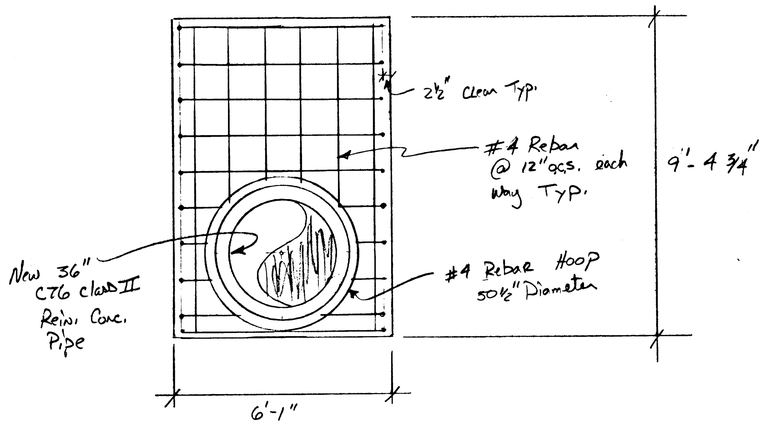

Section B-B
Scale 1½" = 1'-0"

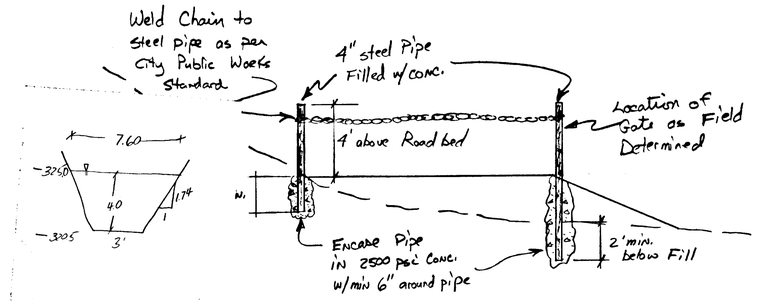

B/4 GATE DETAIL
SCALE: ¼" = 1'-0"

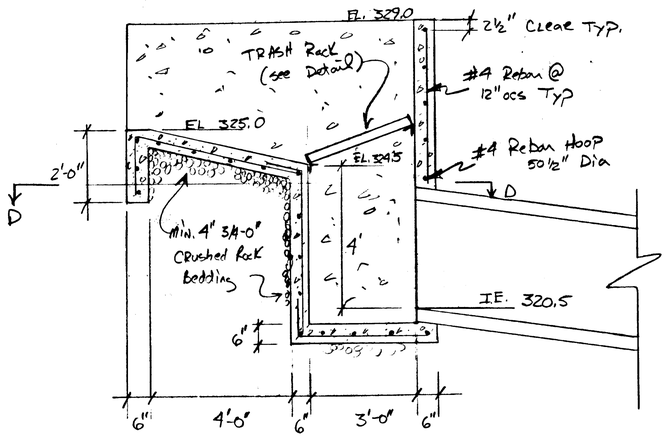

SECTION A-A
NTS.

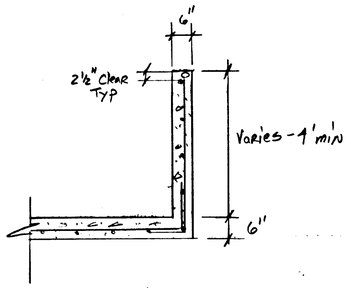

Section C-C
SCALE 1½" = 1'-0"

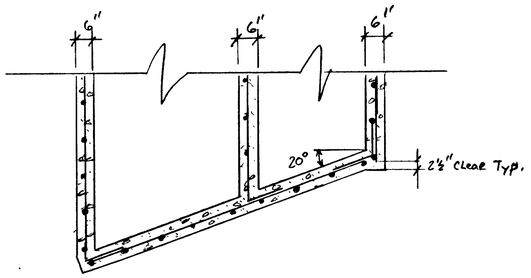

Section D-D
Scale ½" = 1'-0"

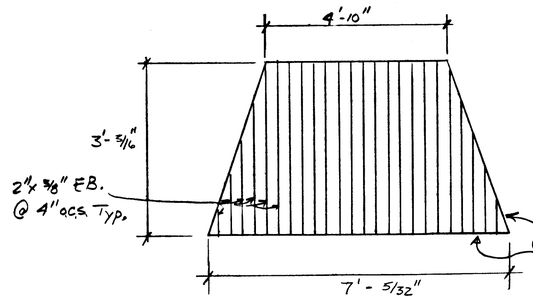

Plan
SCALE: ½" = 1'-0"

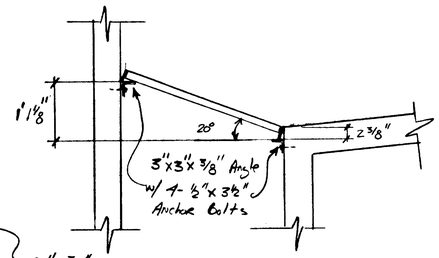

Section
SCALE ¾" = 1'-0"

TRASH RACK DETAIL

A/4 INLET STRUCTURE DETAILS
SCALE: As Shown

AS BUILT 6/92

REGISTERED PROFESSIONAL ENGINEER 14,956 OREGON JULY 25, 1990 KEITH D. GAHLINGHOUSE

INLET STRUCTURE NOTES:

1. Concrete to be min. compressive strength of 3000 psi @ 28 days
2. Provide ¾" Cantan on all Exposed Conc. Edges
3. All Reinforcing steel to be #4 Bar @ 12" ocs. each way unless otherwise noted
4. All Reinforcing steel to conform to ASTM A615, grade 40
5. Min. cover over all Reinforcing steel shall be 2½"
6. Structural steel shall conform to ASTM A36
7. Min. Rebar Lap distance shall be 20 times bar dia.
8. Trash Rack to be Hot-Dip Galvanized after Fabrication. Field verify dimensions prior to fabrication.

DATE	NO.	REVISION	DRAWN KA		
			FILE CI-91-03	DATE 10-14-91	
			SCALE: As Shown		

CITY OF WEST LINN
PUBLIC WORKS DEPARTMENT

Buck/Barlow Storm Sewer Improvement
Detail Sheet Project CI-91-03

4/5

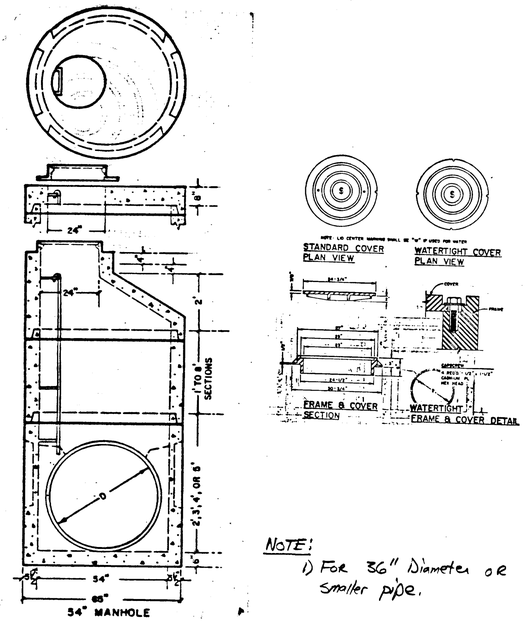

NOTE:
1) For 36" Diameter or smaller pipe.

A/5 OVERSIZED MANHOLE DETAIL
NTS

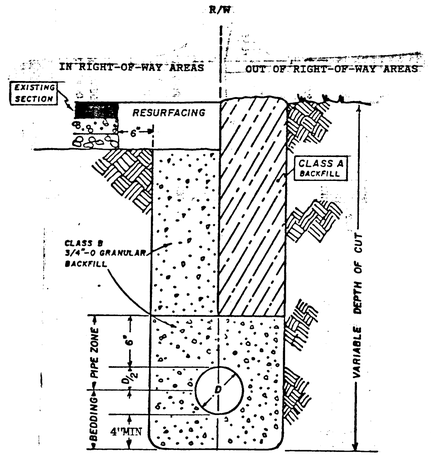

B/5 PIPE BEDDING & BACKFILL DETAIL
NTS

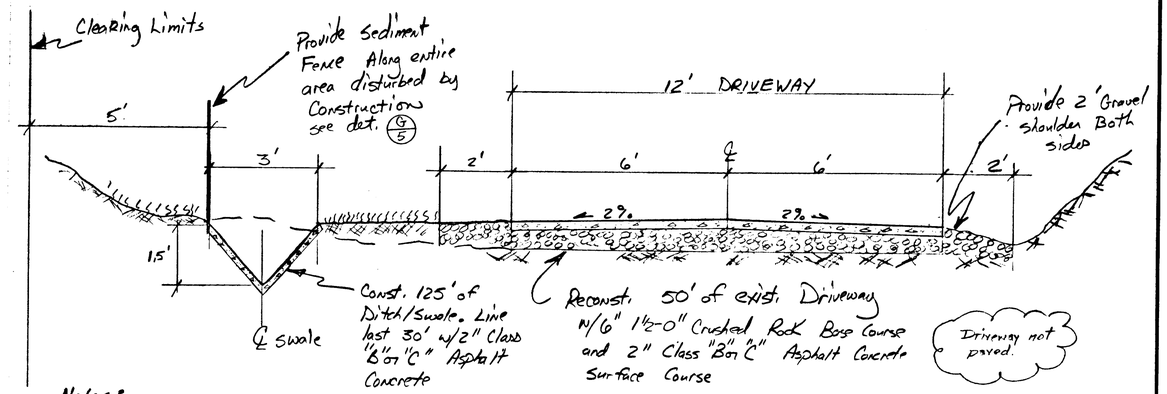

Notes:
1) Reseed All disturbed Area's including ditch/swale not lined w/AC with grass seed
2. Provide Straw Bale Sediment Barrier in Ditch/Swale meeting City Stds. see det F/5

D/5 DRIVEWAY & DITCH/SWALE TYPICAL SECTION
SCALE: 1/2" = 1'-0"

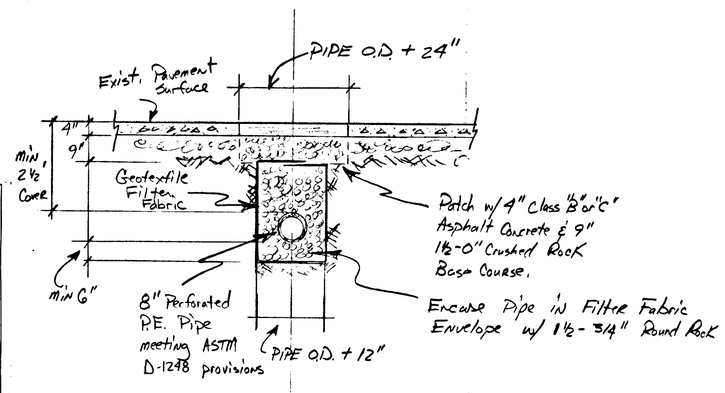

Notes:
1) PIPE to meet provisions of ASTM D-618, D883, D-1248, D-1693, D-2122, D-2412, F-412 standards relating to Perforated P.E. PIPE.
2) Geotextile Filter Fabric to meet specification provisions.

E/5 SLOTTED UNDERDRAIN DETAIL
SCALE: 1/2" = 1'-0"

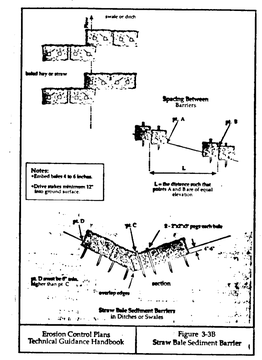

F/5 STRAW BALE SEDIMENT BARRIER
NTS

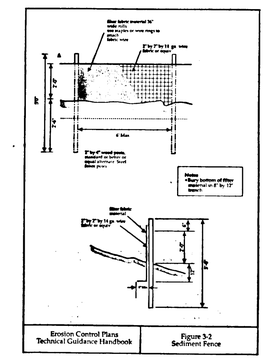

G/5 SEDIMENT FENCE
NTS

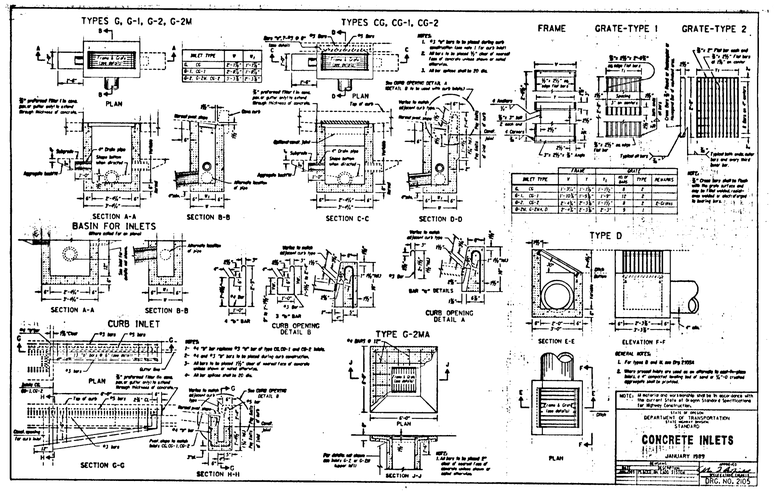

C/5 CATCH BASIN DETAILS
NTS

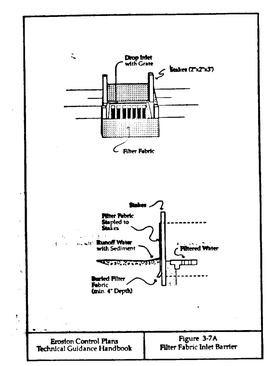

H/5 FILTER FABRIC INLET BARRIER
NTS

AS BUILT 6/92

REGISTERED PROFESSIONAL ENGINEER
OREGON
JULY 25, 1995
KEITH D. GARLINGHOUSE

DATE	NO.	REVISION

DRAWN KD
FILE CI-91-03 CI-91-04 DATE 10-15-91
SCALE: As Shown

CITY OF WEST LINN
PUBLIC WORKS DEPARTMENT

Mohawk Way and Buck/Barlow STORM Improvements, Detail Sheet Projects CI-91-03 CI-91-04

5/5