I-205 OVERPASS

0+00

1+89
GUTTER INLET
DET WL-600

4-A

4-B

1+00

SIDEWALK
TRANSITION FROM 4'
TO 5' CURB-TIGHT

2+00

4-C

4-D

3+00

4+00

0+46
(E) 18" CONCRETE
STORM CULVERT

1+18
12" PVC STORM
OUTLET, GRADE DITCH
TO (E) 18' CULVERT

ADDITIONAL
30'
OF STORM
CONTINUENCE
(ADDED IN ORDER
TO MAKE ELEVATION
DROP NEEDED
FOR DRAINAGE)
-M.H.
1-26-06

1+92
STORM OUTLET
FROM FREEWAY
10"CMP, RIP-RAP
MODIFY TO SUIT

PLAN 2-A

REVISION	DATE	
		Blankenship sidewalk
		Plan View
		WEST LINN
DRAWN: MH		
CHECKED:		SCALE: 1"= 30' SHEET: 2 of 4

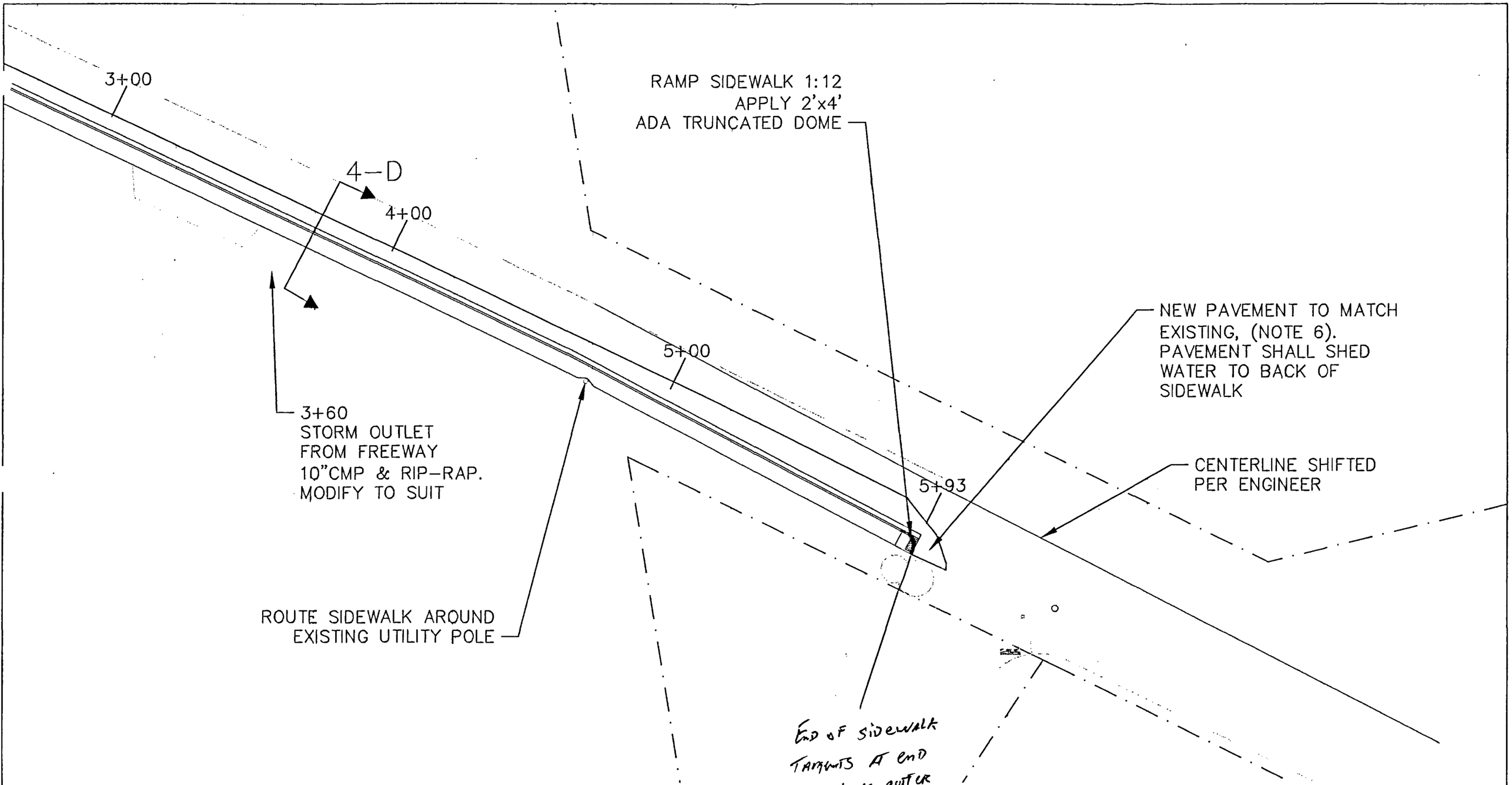

PLAN 3-A

REVISION	DATE	
		Blankenship sidewalk
		Plan View
		WEST LINN
DRAWN: MH		
CHECKED:		SCALE: 1"= 30' SHEET: 3 of 4

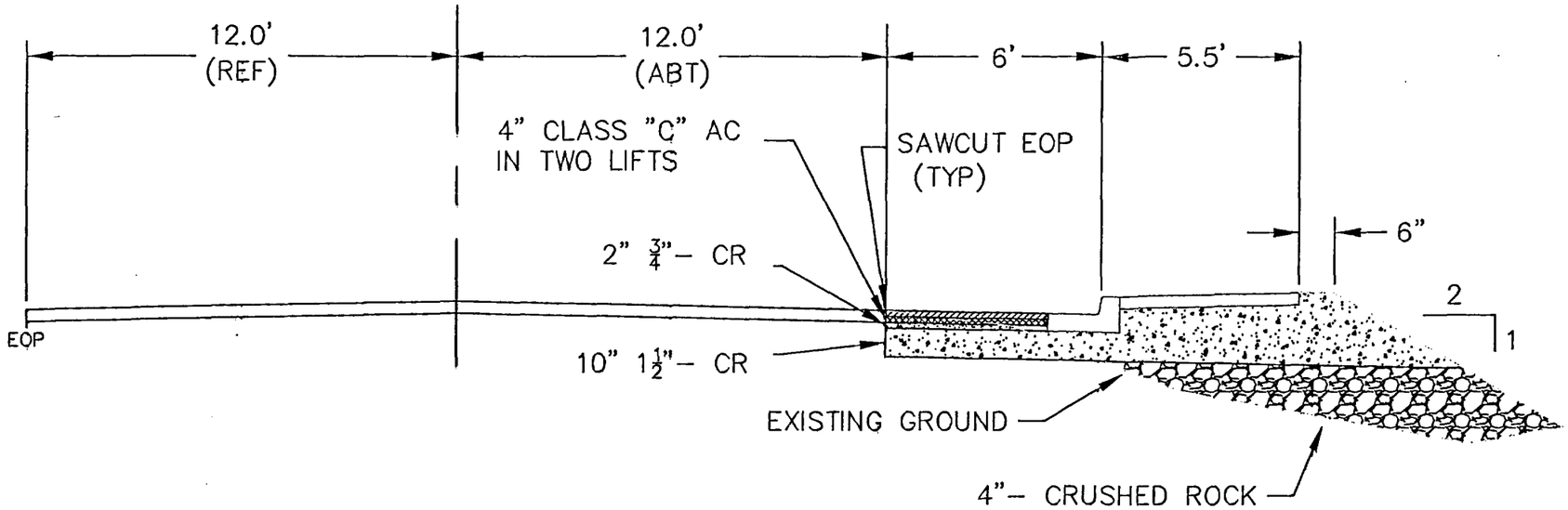

SECTION 4–B

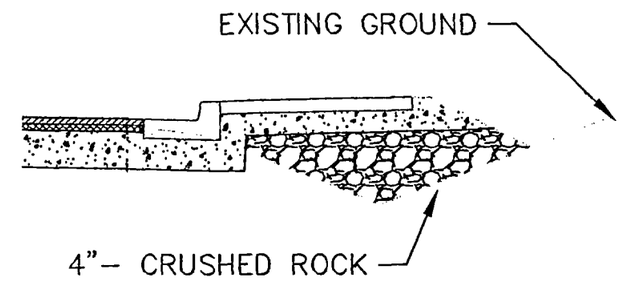

SECTION 4–D

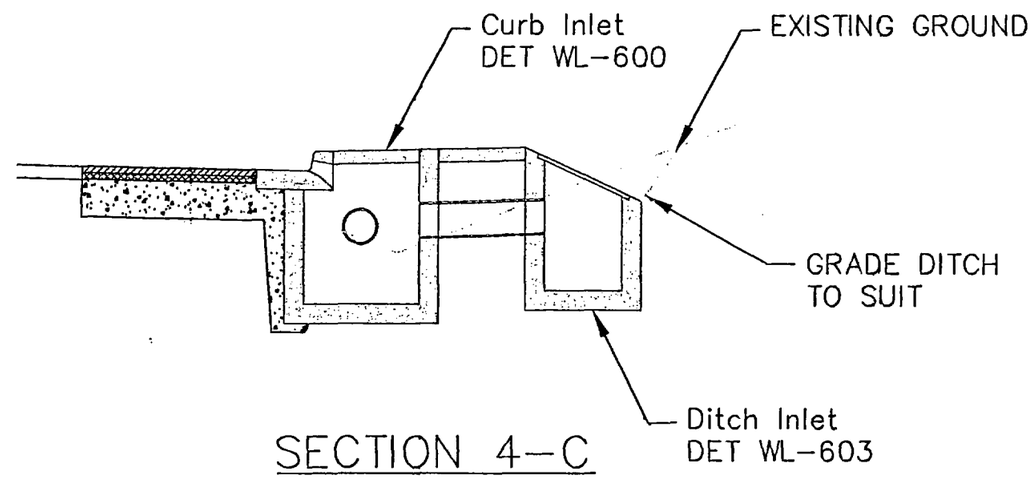

SECTION 4–C

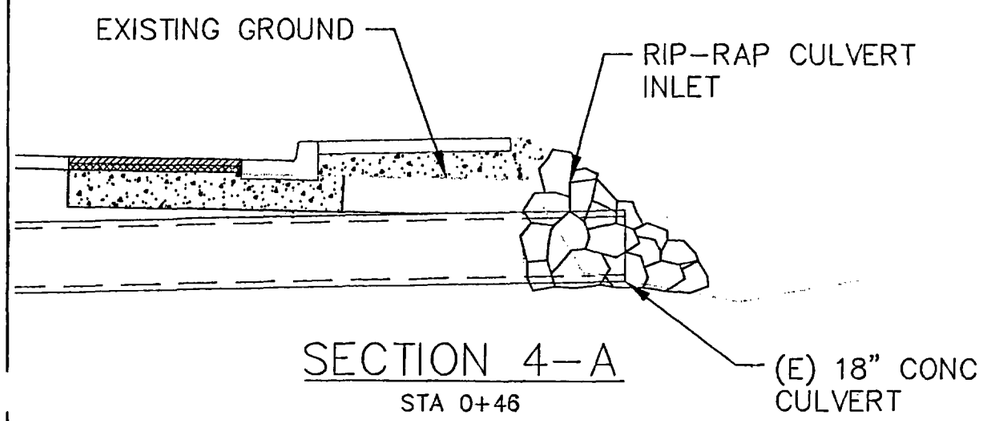

SECTION 4–A

STA 0+46

REVISION	DATE	
		Section Views Blankenship Sidewalk WEST LINN
DRAWN: MH		
CHECKED:		SCALE: 1"= 4'–0 SHEET: 4 of 4