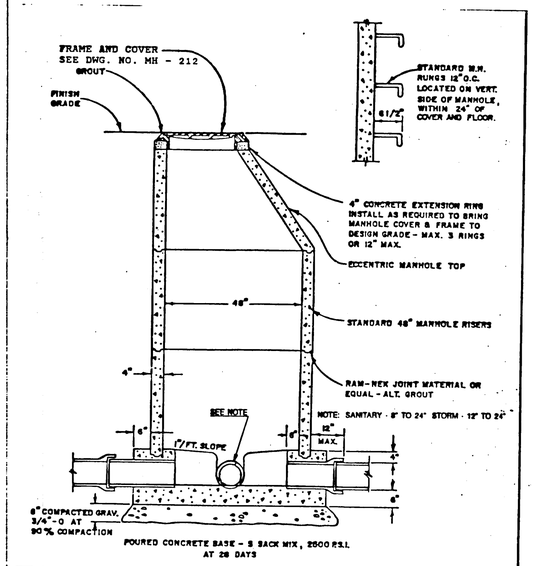

CITY OF WEST LINN	STANDARD MANHOLE
DRAWN BY DDP DATE 5-20-87	
CHECKED BY DLK DATE 5-27-87	
APPROVED BY Earl Reed DATE 5-27-87	DWG. NO. MH - 209

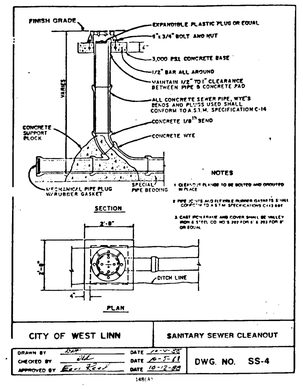

CITY OF WEST LINN	SANITARY SEWER CLEANOUT
DRAWN BY DDP DATE 11-11-86	
CHECKED BY DLK DATE 11-5-86	
APPROVED BY Earl Reed DATE 11-12-86	DWG. NO. SS-4

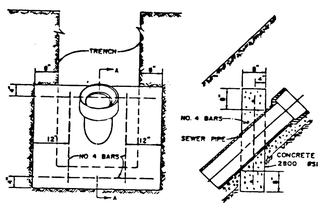

ELEVATION — SECTION A-A

ANCHOR BLOCK

N.T.S.

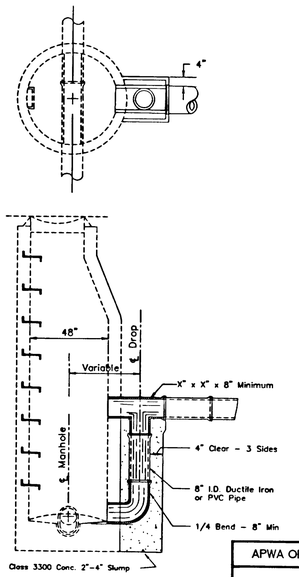

APWA OREGON CHAPTER	
DETAILS FOR OUTSIDE DROP MANHOLE	
DATE: 03/03/90	DRAWING NO. INTERIM 317-A

BRAWN BY: Matt Clemens, OIT

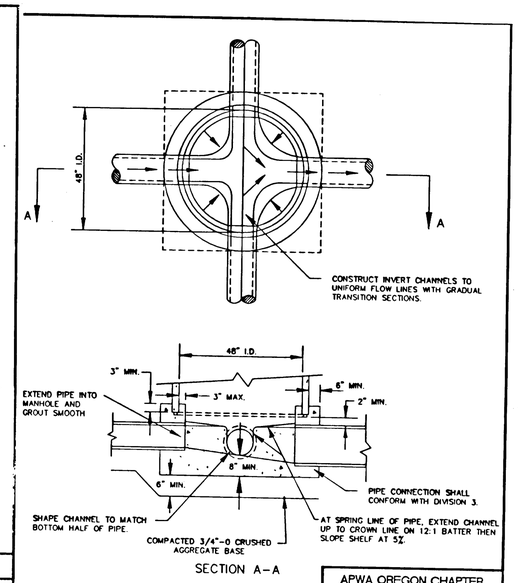

SECTION A-A

NOTES:

1) CONCRETE SHALL BE CLASS 3000.

2) CHANNELS SHALL BE CONSTRUCTED TO PROVIDE SMOOTH SLOPES AND RADII TO OUTLET PIPE.

APWA OREGON CHAPTER	
MANHOLE BASE SECTION	
DATE 03/21/90	DRAWING NO. INTERIM 316-A

Drawing Courtesy of City of Lebanon

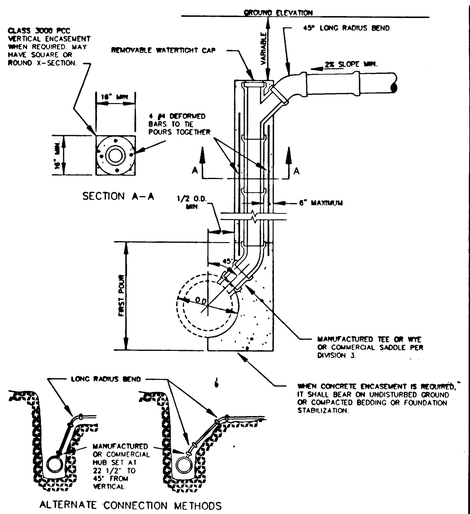

ALTERNATE CONNECTION METHODS

NOTES:

1) PIPE AND FITTINGS SHALL BE COMPATIBLE. ONLY MANUFACTURED FITTINGS SHALL BE USED.

2) MINIMUM DEPTH AT RIGHT OF WAY OR EASEMENT LINE SHALL BE 4 FEET.

3) CAPPING, BLOCKING AND MARKING OF UNCONNECTED SERVICES SHALL CONFORM TO DRAWING NUMBER 311-A.

4) VERTICAL TRENCH WALLS ARE REQUIRED IF IT IS NOT POSSIBLE TO MAINTAIN VERTICAL TRENCH WALLS, USE ALTERNATE CONNECTION METHOD TO MAINTAIN 6" MAXIMUM DISTANCE BETWEEN RISER PIPE AND TRENCH WALLS. REPLACE ALL EXCAVATED OR DISTURBED MATERIAL WITH FULL DEPTH GRANULAR BACKFILL COMPACTED TO 95% RELATIVE DENSITY.

APWA OREGON CHAPTER	
TYPICAL DEEP TRENCH SERVICE CONNECTION ALTERNATE DETAILS	
DATE 03/03/90	DRAWING NO. INTERIM 311-B

Drawing Courtesy of City of Lebanon

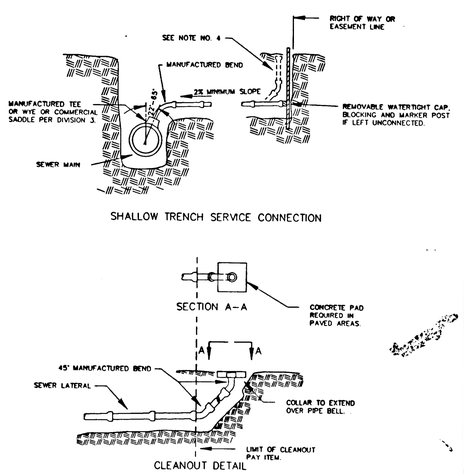

NOTES:

1) PIPE AND FITTINGS SHALL BE COMPATIBLE. ONLY MANUFACTURED FITTINGS SHALL BE USED.

2) MINIMUM DEPTH AT RIGHT OF WAY OR EASEMENT LINE SHALL BE 4 FEET.

3) MARKER POSTS AND BLOCKING SHALL BE TREATED WOOD. POST SHALL BE 2"x4" FIR. POST TO EXTEND 12" MINIMUM ABOVE FINISH GRADE AND EXPOSED AREA SHALL BE PAINTED WHITE.

4) WHEN REQUIRED THE LAST LENGTH OF SERVICE LINE SHALL BE A MANUFACTURED WYE WITH PIPE EXTENDED TO SURFACE AS A CLEANOUT. ADD ONE ADDITIONAL LENGTH OF PIPE BEYOND WYE.

APWA OREGON CHAPTER	
TYPICAL DETAILS FOR SHALLOW TRENCH SERVICE CONNECTION, BLOCKING, MARKERS AND CLEANOUT	
DATE 03/24/90	DRAWING NO. INTERIM 311-A

Drawing Courtesy of City of Lebanon

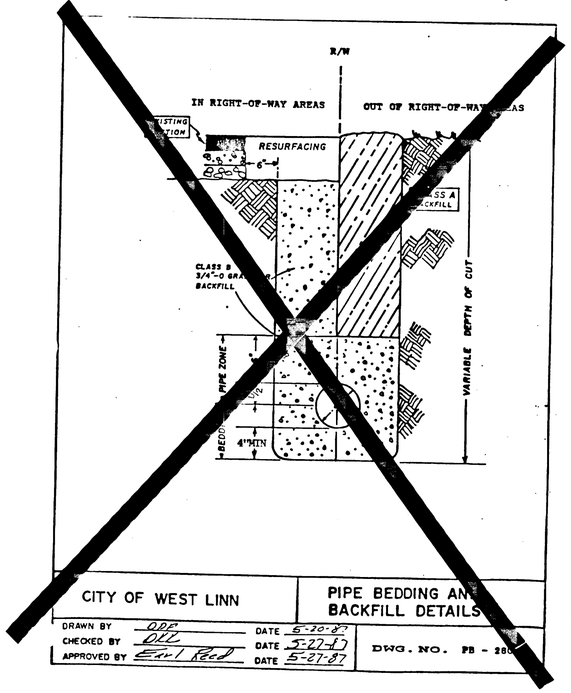

CITY OF WEST LINN	PIPE BEDDING AND BACKFILL DETAILS
DRAWN BY DDP DATE 5-20-87	
CHECKED BY DLK DATE 5-27-87	
APPROVED BY Earl Reed DATE 5-27-87	DWG. NO. PB - 288

DATE	NO.	REVISION	DRAWN BY: K.G./K.K.			
			FILE: CI-92-10	DATE: 6-9-93		
			SCALE: 1" = 30'			

CITY OF WEST LINN
ENGINEERING DEPARTMENT

9TH STREET SANITARY SEWER
DETAIL SHEET

SURVEYED BY:
CHECKED BY: STAFF
DESIGNED BY: K.GARLINGHOUSE, PE

PROJECT NO. CI-93-04
DRAWING FILE:

2 / 2

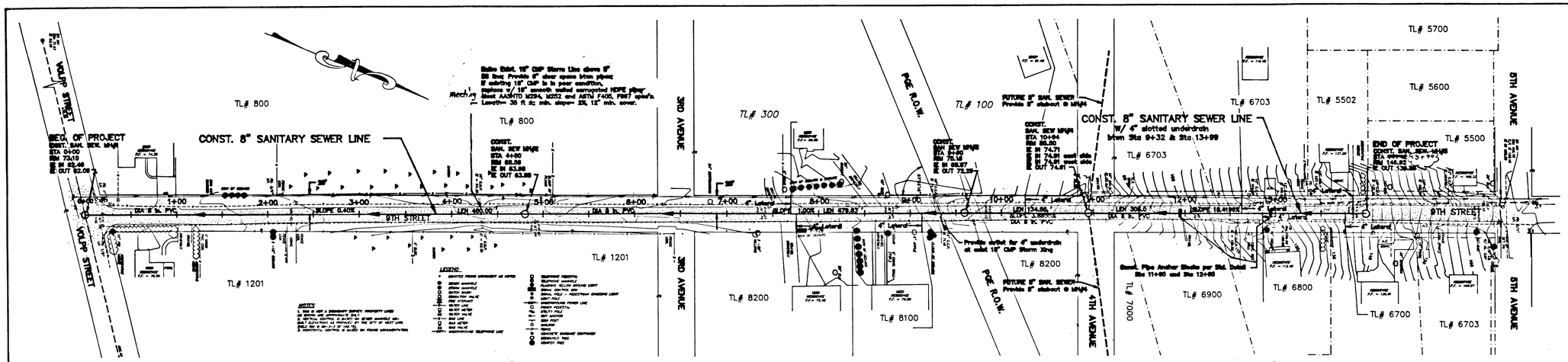

9TH STREET SS PLAN VIEW SCALE: 1"= 60'

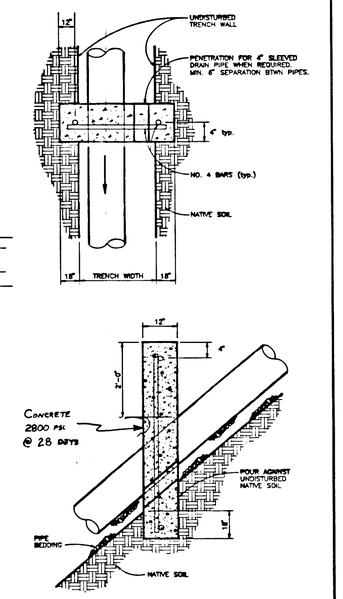

PIPE ANCHOR DETAIL NTS

GENERAL PROJECT NOTES

1. All construction to meet provisions of the 1990 APWA Oregon Chapter Standard Specifications, the City of West Linn Construction Standards, Capital Improvement Project Special Specifications and any permit conditions.

2. The Contractor shall provide erosion & sediment control on the site meeting the City of West Linn Standards and all areas disturbed shall be hydroseeded with grass seed mixture meeting WL Parks Department requirements.

3. Traffic control shall meet provisions of the Manual on Uniform Traffic Control Devices and is the Contractor's responsibility.

4. The Contractor shall notify the City of West Linn Emergency Services (655-8214) & the Public Works Department (656-6081) of any disruption to water or sewer service or street closures.

5. The Contractor is responsible to obtain utility locates prior to contruction.

6. Work hours are restricted to 8:00 am to 6:00 pm Monday through Friday.

7. Protect existing landscaping within construction limits. Avoid destruction of trees & vegetation wherever possible.

8. No Boundary Survey has been completed of the project area. Property lines as shown are approximate only. Protect or reestablish property corners damaged during construction.

9. Utility line locations as shown are approximate, field verify before construction.

10. All water lines shall be disinfected & tested (pressure & bacterialogical) to the City of West Linn Standards and Oregon State Health Division Rules. See detail for information on construction sequencing prior to disinfection.

11. Deflection of pipe shall not exceed the manufacture specificatons or recommendation. For 6" D.I. AWWA C151 Class 52 Ductile Iron pipe the maximum allowable deflection at the joint is 5° or 18" per 18' of pipe length.

12. Water service disruptions shall be minimized to customers. No water shut off shall be permitted for businesses during business hours.

Service Lateral Construction Schedule

STA.		SIZE	ADDRESS	
7+70	Left	4"	1220	9TH STREET
7+76	Right	4"	1229	9TH STREET
9+13	Right	4"	1233	9TH STREET
10+25	Left	4"	1250	9TH STREET
12+59	Left	4"	TL# 6703	
12+75	Right	4"	1343	9TH STREET
13+77	Right	4"	1350	9TH STREET
13+85	Left	4"	1390	9TH STREET

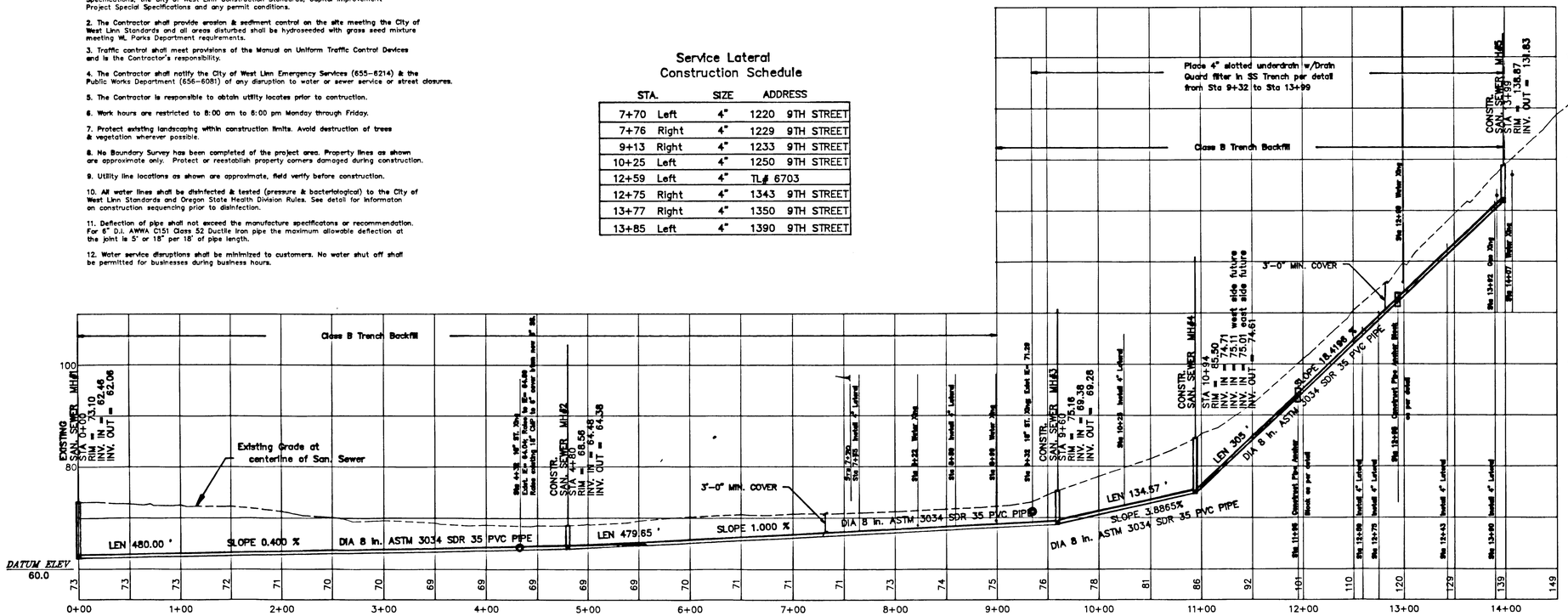

9TH STREET SS PROFILE SCALE (H: 1"= 60'; V: 1"= 12')

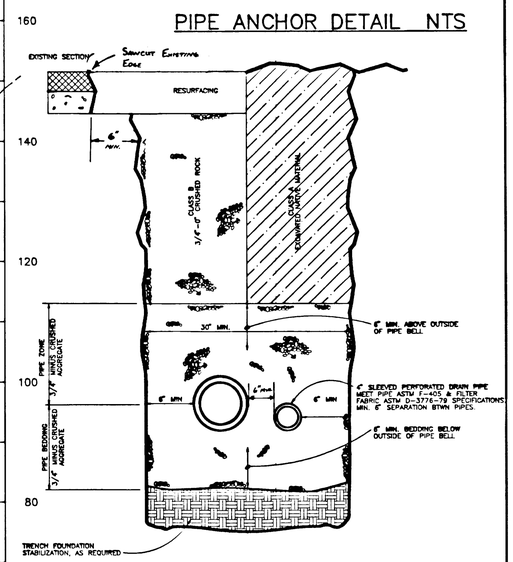

TRENCH DETAIL NTS

REGISTERED PROFESSIONAL ENGINEER 14,958 OREGON JULY 25, 1990 KEITH D. GARLINGHOUSE

RENEW 7-1-95
6-1-94

DATE	NO.	REVISION

DRAWN BY: JS
SCALE: AS NOTED DATE: 3-4-94
FILE: SANITARY SEWER INFILL DESIGNS

CITY OF WEST LINN
ENGINEERING DIVISION

9TH STREET SANITARY SEWER
PLAN & PROFILE VIEWS

SURVEYED BY: KAMPE ASSOCIATES
CHECKED BY: STAFF
DESIGNED BY: JS, EIT; KG, PE

PROJECT NO.: CI-93-04
DRAWING FILE: 9THSS\9THSS2

PS1
2