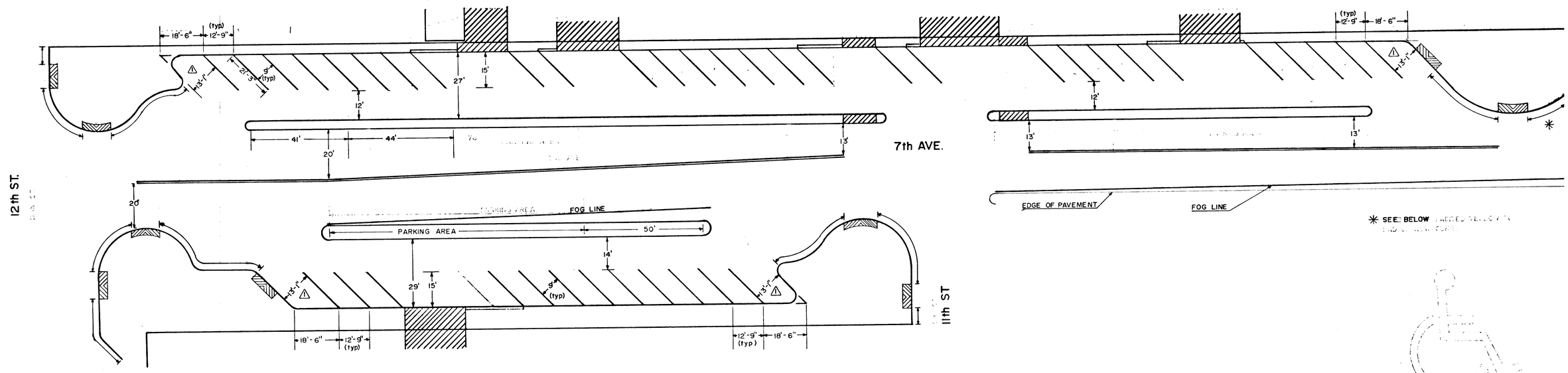

NOTES

1. YELLOWED AREAS SHALL BE PAINTED FOR "NO-PARKING".
2. CURB ISLANDS SHALL BE PAINTED YELLOW, EXCEPT FOR PARKING AREAS AS SHOWN ABOVE.

⚠ INSTALL HANDICAP ACCESS SYMBOL AS SHOWN ABOVE.

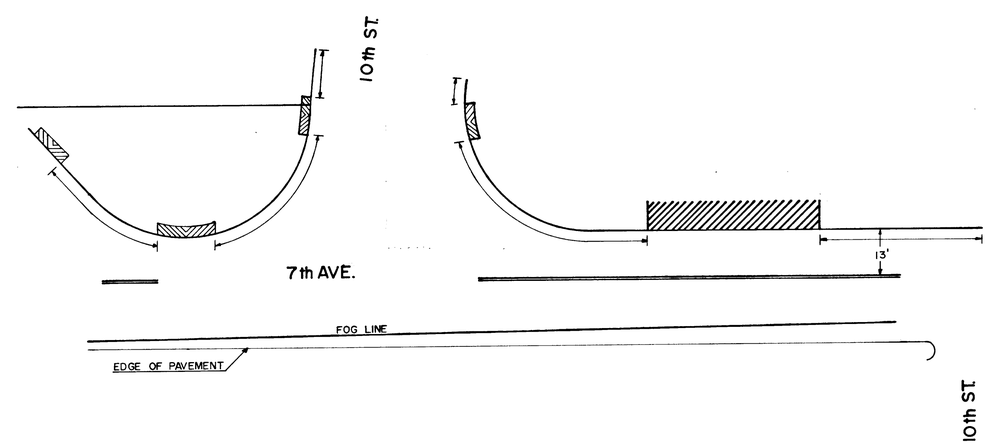

DATE	NO.	REVISION

DRAWN DDP
FILE
DATE 8-5-1987
SCALE 1" = 20'

CITY OF WEST LINN

PUBLIC WORKS DEPARTMENT

7th AVENUE PROJECT

PARKING LAYOUT 10th – 12th STREET